https://truckmanualshub.com/

Illustrated Parts Manual

Model 4045R

P/N 3121753

November 16, 2018 - Rev F

ANSI

AS/NZS

An Oshkosh Corporation Company

https://truckmanualshub.com/

https://truckmanualshub.com/

REVISION LOG

NOTES:

NOTE: Country of Assembly - The R Scissor Lifts are assembled by JLG Industries in the following countries: USA or China. Refer to the Serial Number Tag to identify the country of assembly. R Scissors assembled in USA will have a serial number prefix of 02 (i.e. 02XXXXXXXX), and R Scissors manufactured in China will have a serial number prefix of B2 (i.e. B2XXXXXXXX).

REVISION LOG:

April 24, 2017 - A - Original Issue of Manual (1001212500 Rev B, 1001223183 Rev B & 1001223928 Rev B) (Revision 2)

July 14, 2017 - B - Revised Manual (1001212500 Rev E & 1001227279 Rev B) (Revision 2)

November 30, 2017 - C - Revised Manual (1001212500 Rev E & 1001227279 Rev B) (Revision1)

March 15, 2018 - D - Revised Manual (1001212500 Rev E & 1001227279 Rev B) (Revision 3)

July 23, 2018 - E - Revised Manual (1001212500 Rev E & 1001227279 Rev B) (Revision 1)

November 16, 2018 - F - Revised Manual (1001212500 Rev E & 1001227279 Rev B)

https://truckmanualshub.com/

GENERAL INFORMATION

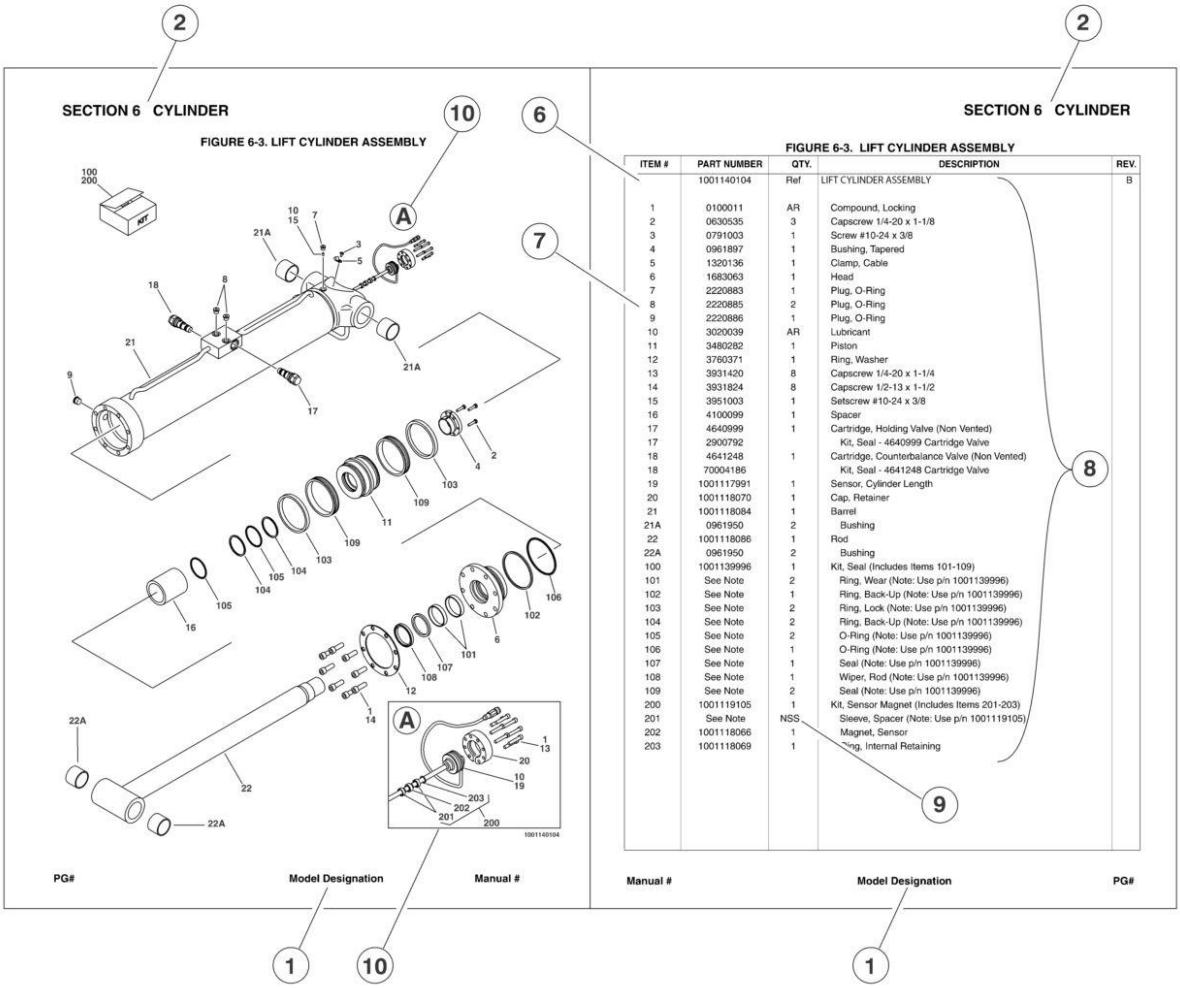

ITEM #	PART NUMBER	QTY.	DESCRIPTION	REV.
	1001140104	Ref.	LIFT CYLINDER ASSEMBLY	B
1	0100011	AR	Compound, Locking	
2	0630535	3	Capscrew 1/4-20 x 1-1/8	
3	0791003	1	Screw #10-24 x 3/8	
4	0961897	1	Bushing, Tapered	
5	1320136	1	Clamp, Cable	
6	1683063	1	Head	
7	2220883	1	Plug, O-Ring	
8	2220885	2	Plug, O-Ring	
9	2220886	1	Plug, O-Ring	
10	3020039	AR	Lubricant	
11	3480282	1	Piston	
12	3760371	1	Ring, Washer	
13	3931420	8	Capscrew 1/4-20 x 1-1/4	
14	3931824	8	Capscrew 1/2-13 x 1-1/2	
15	3951003	1	Setscrew #10-24 x 3/8	
16	4100099	1	Spacer	
17	4640999	1	Cartridge, Holding Valve (Non Vented)	
17	2900792		Kit, Seal - 4640999 Cartridge Valve	
18	4641248	1	Cartridge, Counterbalance Valve (Non Vented)	
18	70004186		Kit, Seal - 4641248 Cartridge Valve	
19	1001117991	1	Sensor, Cylinder Length	
20	1001118070	1	Cap, Retainer	
21	1001118084	1	Barrel	
21A	0961950	2	Bushing	
22	1001118086	1	Rod	
22A	0961950	2	Bushing	
100	1001139996	1	Kit, Seal (Includes Items 101-109)	
101	See Note	2	Ring, Wear (Note: Use p/n 1001139996)	
102	See Note	1	Ring, Back-Up (Note: Use p/n 1001139996)	
103	See Note	2	Ring, Lock (Note: Use p/n 1001139996)	
104	See Note	2	Ring, Back-Up (Note: Use p/n 1001139996)	
105	See Note	2	O-Ring (Note: Use p/n 1001139996)	
106	See Note	1	O-Ring (Note: Use p/n 1001139996)	
107	See Note	1	Seal (Note: Use p/n 1001139996)	
108	See Note	1	Wiper, Rod (Note: Use p/n 1001139996)	
109	See Note	2	Seal (Note: Use p/n 1001139996)	
200	1001119105	1	Kit, Sensor Magnet (Includes Items 201-203)	
201	See Note	NSS	Sleeve, Spacer (Note: Use p/n 1001119105)	
202	1001118066	1	Magnet, Sensor	
203	1001118069	1	Ring, Internal Retaining	

Manual # Model Designation PG#

1) MACHINE IDENTIFICATION
Machines are identified by model and in some cases a combination of models, serial number (SN) or regional standard (i.e ANSI, CE,CSA). Components may also be identified by SN or manufacturer. common components that may be identified by these characteristics are engines and hydraulic components.

2) PARTS MANUAL ORGANIZATION
Product information in this manual is organized under section titles. Frame, Cylinder, Hydraulic and Electrical are a few examples. Each section is organized by figure and page number. The information within the Figure is then organized by item number, part number, description and corresponding illustration (s).

3) TABLE OF CONTENTS
A table of contents is found toward the beginning of the manual. Figure number, description and page number are provided for quick reference to the page containing the related information.

4) RECOMMENDED SPARE PARTS
The Recommended Spare Parts, located near the end of the manual, referance most frequently used maintenance parts.

5) PART NUMBER INDEX
A numerical index listing all part numbers and the corresponding page number(s) appears at the back of the manual.

https://truckmanualshub.com/

GENERAL INFORMATION

6) NON-SERVICED PARTS

In some instances, it is necessary to display non-serviced parts, assemblies or installations. In the case of assemblies and installations there will be a Ref in the Qty column. In case of parts that are not available for service within assemblies or components, there will be a NSS (Not Sold Separately) or NLA (No Longer Available) listed in the Qty. column of the manual.

7) PARTS LIST ITEM NUMBERS

Numbers shown in the item# column correspond to numbers used in the associated illustration (s). Item numbers which are missing from the sequence in the parts list are not used on that page

8) INDENTED PARTS DESCRIPTION

An indented part description is included in the item under which it is indented.

9) ABBREVIATION AND SYMBOLS

AC ..... Alternating Current
ADE. ..... Advanced Design Electronics
ANSI ..... American National Standards Institute
AR.. ..... As Required
ASSY ..... Assembly
AUX... ..... Auxiliary
AWG ..... American Wire Gauge
B/M.. ..... Bill of Material
CE.. ..... European Conformity
CCW ..... Counter Clockwise
cm. ..... Centimeter
CW ..... Clockwise
CSA. ..... Canadian Standards Association
CYL... ..... Cylinder
DIA. ..... Diameter
DC ..... Direct Current
EMS ..... Emergency Stop
ENG ..... Engine
FT(ft).. ..... Feet
GA(Ga).. ..... Gauge
HYD ..... Hydraulic
Hz.. ..... Hertz
ID.. ..... Inside Diameter
in... ..... inches
ISO ..... International Organization for Standards
JIC ..... Joint Industry Council
KG ..... Kilogram
L.. ..... Liter
LB ..... Pounds
LCD ..... Liquid Crystal Display
LED ..... Light Emitting Diodes
LH... ..... Left Hand
LSS ..... Load Sensing System
M(m)... ..... Metric/Meter
MM (mm) ..... Milimeter
mA. ..... Miliamps
NLA ..... No Longer Available
NPT ..... National Pipe Threads
NSS ..... Not Sold Separately
OD.. ..... Outside Diameter
ORB ..... O-Ring Boss
ORFS ..... O-Ring Face Seal
OZ (oz). ..... Ounces
PG ..... Page
P/N. ..... Part Number
qt. ..... Quarts
QTY. ..... Quantity
REF ..... Reference
REV ..... Revision Level
RH... ..... Right Hand
SAE ..... Society of Automotive Engineers
SN.. ..... Serial Number
SPEC(S) ..... Specifications
T/T. ..... Turntable
UGM ..... Universal Ground Module
V. ..... Volts
W... ..... Watts
#... ..... Number

10) ILLUSTRATION REFERANCE LETTERS

When necessary, illustrations may contain referance letters that are intended to track information (i. e. hoses, harnesses) from one point to another or to track visual enlargement of components to show details that may be located in another area on the illustration.

Note: Due to continuous product improvements, JLG Industries, Inc. reserves the right to make specification changes without prior notification. Contact JLG Industries, Inc. for updated information.

https://truckmanualshub.com/

https://truckmanualshub.com/

TABLE OF CONTENTS

SECTION 1 - FRAME 9

FIGURE 1-1. STEER INSTALLATION 10
FIGURE 1-2. DRIVE/BRAKE INSTALLATION 12
FIGURE 1-3. DRIVE MOTOR ASSEMBLY 14
FIGURE 1-4. TIRE AND WHEEL INSTALLATION 16
FIGURE 1-5. POTHOLE PROTECTION SYSTEM INSTALLATION 18
FIGURE 1-6. TILT SENSOR INSTALLATION 20
FIGURE 1-7. BATTERY CHARGER INSTALLATION - DELTA-Q (LOCALLY SUPPLIED PLUG) 22
FIGURE 1-8. BATTERY CHARGER INSTALLATION - DELTA-Q (110V PLUG) 24
FIGURE 1-9. BATTERY CHARGER INSTALLATION - DELTA-Q (KOREAN PLUG) 26
FIGURE 1-10. BATTERY CHARGER INSTALLATION - EAGLE PERFORMANCE (110V PLUG) 28
FIGURE 1-11. BATTERY CHARGER INSTALLATION - GREEN POWER (LOCALLY SUPPLIED PLUG) 30
FIGURE 1-12. BATTERY CHARGER INSTALLATION - GREEN POWER (CHINA PLUG) 32
FIGURE 1-13. STROBE LIGHT INSTALLATION - SINGLE ECCO BRAND (AMBER) (WITHOUT GUARD) 34
FIGURE 1-14. STROBE LIGHT INSTALLATION - SINGLE SAMMOON BRAND (WITHOUT GUARD) 36
FIGURE 1-15. STROBE LIGHT INSTALLATION - SINGLE ECCO BRAND (AMBER) (WITH GUARD) 38
FIGURE 1-16. STROBE LIGHT INSTALLATION - SINGLE SAMMOON BRAND (WITH GUARD 40
FIGURE 1-17. STROBE LIGHT INSTALLATION - DUAL ECCO BRAND (AMBER) (WITHOUT GUARD) 42
FIGURE 1-18. STROBE LIGHT INSTALLATION - DUAL SAMMOON BRAND (WITHOUT GUARD) 44
FIGURE 1-19. STROBE LIGHT INSTALLATION - DUAL ECCO BRAND (AMBER) (WITH GUARD) 46
FIGURE 1-20. STROBE LIGHT INSTALLATION - DUAL SAMMOON BRAND (WITH GUARD) 48
FIGURE 1-21. ALARM INSTALLATION (AMBIENT/WHITE NOISE) 50
FIGURE 1-22. LADDER INSTALLATION 52

SECTION 2 - GROUND CONTROLS 55

FIGURE 2-1. HYDRAULIC COMPONENTS INSTALLATION 56
FIGURE 2-2. VALVE ASSEMBLY 58
FIGURE 2-3. ELECTRICAL COMPONENTS INSTALLATION (CHINA BUILT MACHINES) 60
FIGURE 2-4. ELECTRICAL COMPONENTS INSTALLATION (MEXICO BUILT MACHINES) 62
FIGURE 2-5. MDI INSTALLATION 64
FIGURE 2-6. BATTERIES INSTALLATION - STANDARD 12V-150AH 66
FIGURE 2-7. BATTERIES INSTALLATION - STANDARD 12V-185AH 68
FIGURE 2-8. BATTERIES INSTALLATION - AGM 12V-150AH 70
FIGURE 2-9. INVERTER INSTALLATION (OPTIONAL) 72
FIGURE 2-10. DOORS INSTALLATION 74

SECTION 3 - SCISSORS ARMS 77

FIGURE 3-1. SCISSORS ARMS INSTALLATION 78
FIGURE 3-2. ARM GUARD INSTALLATION 84

SECTION 4 - PLATFORM 87

FIGURE 4-1. PLATFORM INSTALLATION 88
FIGURE 4-2. PLATFORM EXTENSION INSTALLATION 90
FIGURE 4-3. RAILS INSTALLATION (SIDE BY SIDE) 92
FIGURE 4-4. RAILS INSTALLATION (TUBE IN TUBE) 94
FIGURE 4-5. EXTENSION HANDLES INSTALLATION (OPTIONAL) 96
FIGURE 4-6. PLATFORM CONSOLE INSTALLATION 98
FIGURE 4-7. DRIVE/STEER CONTROLLER ASSEMBLY 100
FIGURE 4-8. ELECTRICAN'S TREE INSTALLATION (OPTIONAL) 102
FIGURE 4-9. PANEL CARRIER INSTALLATION (OPTIONAL) 104
FIGURE 4-10. PIPE RACKS INSTALLATION (SIDE BY SIDE RAILS) (OPTIONAL) 106
FIGURE 4-11. PIPE RACKS INSTALLATION (TUBE IN TUBE RAILS) (OPTIONAL) 108
FIGURE 4-12. QUIK WELDER INSTALLATION (OPTIONAL) 110
FIGURE 4-13. VISE INSTALLATION (OPTIONAL) 112
FIGURE 4-14. WORKSTATION INSTALLATION (OPTIONAL) 114
FIGURE 4-15. OVERHEAD PROTECTION INSTALLATION (KOREAN SPECS) 116

SECTION 5 - CYLINDER 119

FIGURE 5-1. LIFT CYLINDER ASSEMBLY - LOWER 120
FIGURE 5-2. LIFT CYLINDER ASSEMBLY - UPPER 122
FIGURE 5-3. STEER CYLINDER ASSEMBLY 124

https://truckmanualshub.com/

TABLE OF CONTENTS

SECTION 6 - HYDRAULIC 127

FIGURE 6-1. HYDRAULIC COMPONENTS INSTALLATION 128

SECTION 7 - ELECTRICAL 131

FIGURE 7-1. AC BOX AT PLATFORM INSTALLATION - 110V GFI (ALL SPECS EXCEPT AUSTRALIAN & CE SPECS) 132
FIGURE 7-2. AC BOX AT PLATFORM INSTALLATION - 110V IEC YELLOW (CE SPECS) 134
FIGURE 7-3. AC BOX AT PLATFORM INSTALLATION - 220V IEC BLUE (CE SPECS) 136
FIGURE 7-4. AC BOX AT PLATFORM INSTALLATION - 220V CEE7 POST GROUND (CE SPECS) 138
FIGURE 7-5. AC BOX AT PLATFORM INSTALLATION - 220V CEE7 SIDE GROUND (CE SPECS) 140
FIGURE 7-6. AC BOX AT PLATFORM INSTALLATION - 220V AFSINT 107 (CE SPECS) 142
FIGURE 7-7. AC BOX AT PLATFORM INSTALLATION - 220V CHINA PLUG (CHINA SPECS) 144
FIGURE 7-8. AC BOX AT PLATFORM INSTALLATION - 220V LOCALLY SUPPLIED COMPONENTS (ALL SPECS) 146
FIGURE 7-9. BREAKER BOX KIT WITH 1 DOUBLE BREAKER 148
FIGURE 7-10. BREAKER BOX KIT WITH 3 BREAKERS 150
FIGURE 7-11. CHASSIS HARNESS 152
FIGURE 7-12. GROUND TO PLATFORM CABLE INSTALLATION - WITHOUT PLATFORM COIL CABLE (CHINA BUILT MACHINES) 156
FIGURE 7-13. GROUND TO PLATFORM CABLE INSTALLATION - WITHOUT PLATFORM COIL CABLE (MEXICO BUILT MACHINES) 158
FIGURE 7-14. GROUND TO PLATFORM CABLE INSTALLATION - WITH PLATFORM COIL CABLE (CHINA BUILT MACHINES) 160
FIGURE 7-15. GROUND TO PLATFORM CABLE INSTALLATION - WITH PLATFORM COIL CABLE (MEXICO BUILT MACHINES) 162
FIGURE 7-16. GROUND TO PLATFORM CABLE INSTALLATION - WITHOUT PLATFORM COIL CABLE AND WITH FOOTSWITCH (CHINA BUILT MACHINES) 164
FIGURE 7-17. GROUND TO PLATFORM CABLE INSTALLATION - WITH PLATFORM COIL CABLE & FOOTSWITCH (CHINA BUILT MACHINES) 166
FIGURE 7-18. INVERTER HARNESS 168
FIGURE 7-19. LIFT DOWN HARNESS - LOWER 170
FIGURE 7-20. LIFT DOWN HARNESS - UPPER 172
FIGURE 7-21. LSS HARNESS 174
FIGURE 7-22. PLATFORM CONTROL BOX HARNESS 176
FIGURE 7-23. RECEPTACLE BOX KIT - 110V GFI 178
FIGURE 7-24. RECEPTACLE BOX KIT - 110V IEC YELLOW (CE SPEC) 180
FIGURE 7-25. RECEPTACLE BOX KIT - 220V IEC BLUE (CE SPEC) 182
FIGURE 7-26. RECEPTACLE BOX KIT - 220V CEE7 POST GROUND (CE SPEC) 184
FIGURE 7-27. RECEPTACLE BOX KIT - 220V CEE7 SIDE GROUND (CE SPEC) 186
FIGURE 7-28. RECEPTACLE BOX KIT - 220V AFSINT 107 (CE SPEC) 188

SECTION 8 - DECALS 191

FIGURE 8-1. DECAL INSTALLATION (ANSI SPECS) 192
FIGURE 8-2. DECAL INSTALLATION (AUSTRALIAN SPECS) 194
FIGURE 8-3. DECAL INSTALLATION (BRAZIL SPECS) 196
FIGURE 8-4. DECAL INSTALLATION (CE SPECS) 198
FIGURE 8-5. DECAL INSTALLATION (CHINA SPECS) 200
FIGURE 8-6. DECAL INSTALLATION (CSA SPECS) 202
FIGURE 8-7. DECAL INSTALLATION (KOREAN SPECS) 204
FIGURE 8-8. DECAL INSTALLATION (LATIN AMERICAN SPECS) 206
FIGURE 8-9. DECAL INSTALLATION - OPTIONS 208

SECTION 9 - RECOMMENDED SERVICE PARTS STOCK 211

FIGURE 9-1. RECOMMENDED SERVICE PARTS STOCK 212

SECTION 10 - SPECIAL OPTIONS 213

FIGURE 10-1. SPECIAL OPTIONS 214

PART NUMBER INDEX 217

https://truckmanualshub.com/

SECTION 1 - FRAME

https://truckmanualshub.com/

FIGURE 1-1. STEER INSTALLATION

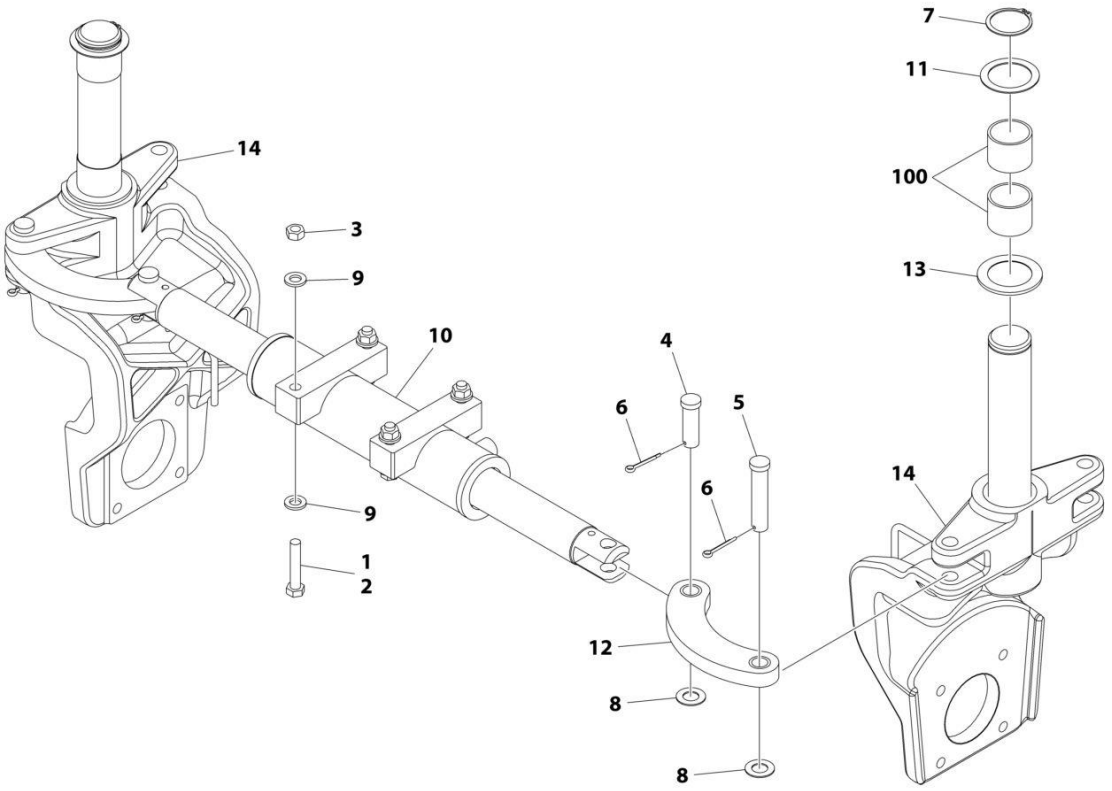

ART_1001213926

https://truckmanualshub.com/

FIGURE 1-1. STEER INSTALLATION

ITEM	PART NUMBER	QTY	DESCRIPTION	REV
	1001213926	Ref	STEER INSTALLATION	A
1	0100011	AR	Compound, Locking	
2	0711221	4	Bolt M12 x 65	
3	3331211	4	Nut M12	
4	3431218	2	Pin	
5	3431228	2	Pin	
6	3450505	4	Pin, 5/32 x 1/2	
7	3760217	2	Ring, Retaining	
8	4740086	4	Washer	
9	5241200	8	Washer M12	
10	1001163178	1	Steer Cylinder Assembly (See Separate Breakdown in CYLINDER SECTION)	
11	1001197396	2	Washer	
12	1001213747	2	Link	
13	1001214024	2	Washer	
14	1001214152	2	Spindle	
100	1001153785	4	Bearing (Part of Frame)	

https://truckmanualshub.com/

FIGURE 1-2. DRIVE/BRAKE INSTALLATION

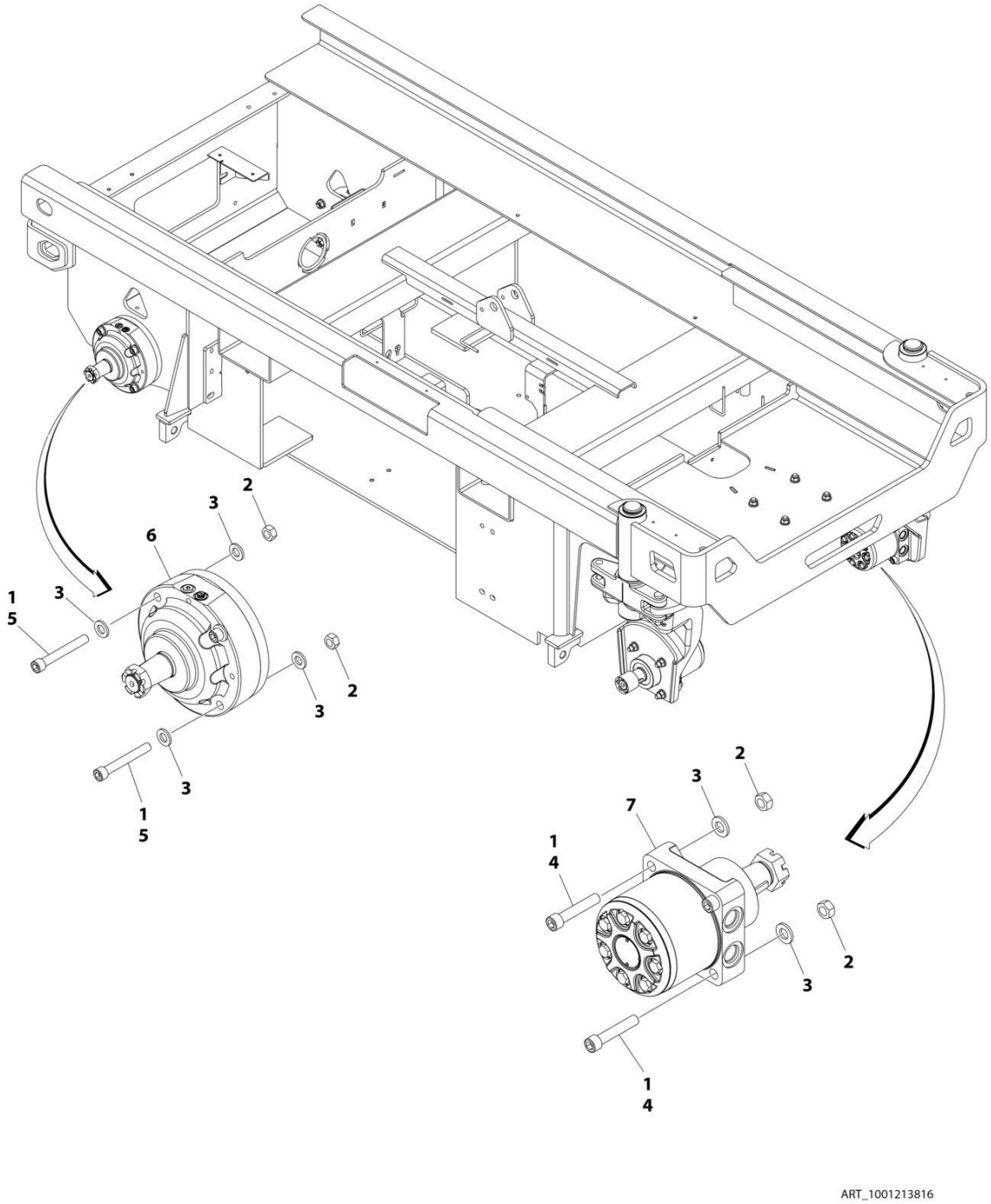

https://truckmanualshub.com/

FIGURE 1-2. DRIVE/BRAKE INSTALLATION

ITEM	PART NUMBER	QTY	DESCRIPTION	REV
	1001213816	Ref	DRIVE/BRAKE INSTALLATION	A
1	0100011	AR	Compound, Locking	
2	3331211	16	Nut M12	
3	5241200	24	Washer M12	
4	5272120	8	Capscrew M12 x 80	
5	5272122	8	Capscrew M12 x 90	
6	1001202773	2	Drive Brake Assembly (Note: No Internal Service Parts Available.)	
6	70005918	1	Key, Shaft	
6	70005919	1	Nut 1-1/8	
7	1001213264	2	Drive Motor Assembly (See Separate Breakdown in this Section)	

https://truckmanualshub.com/

FIGURE 1-3. DRIVE MOTOR ASSEMBLY

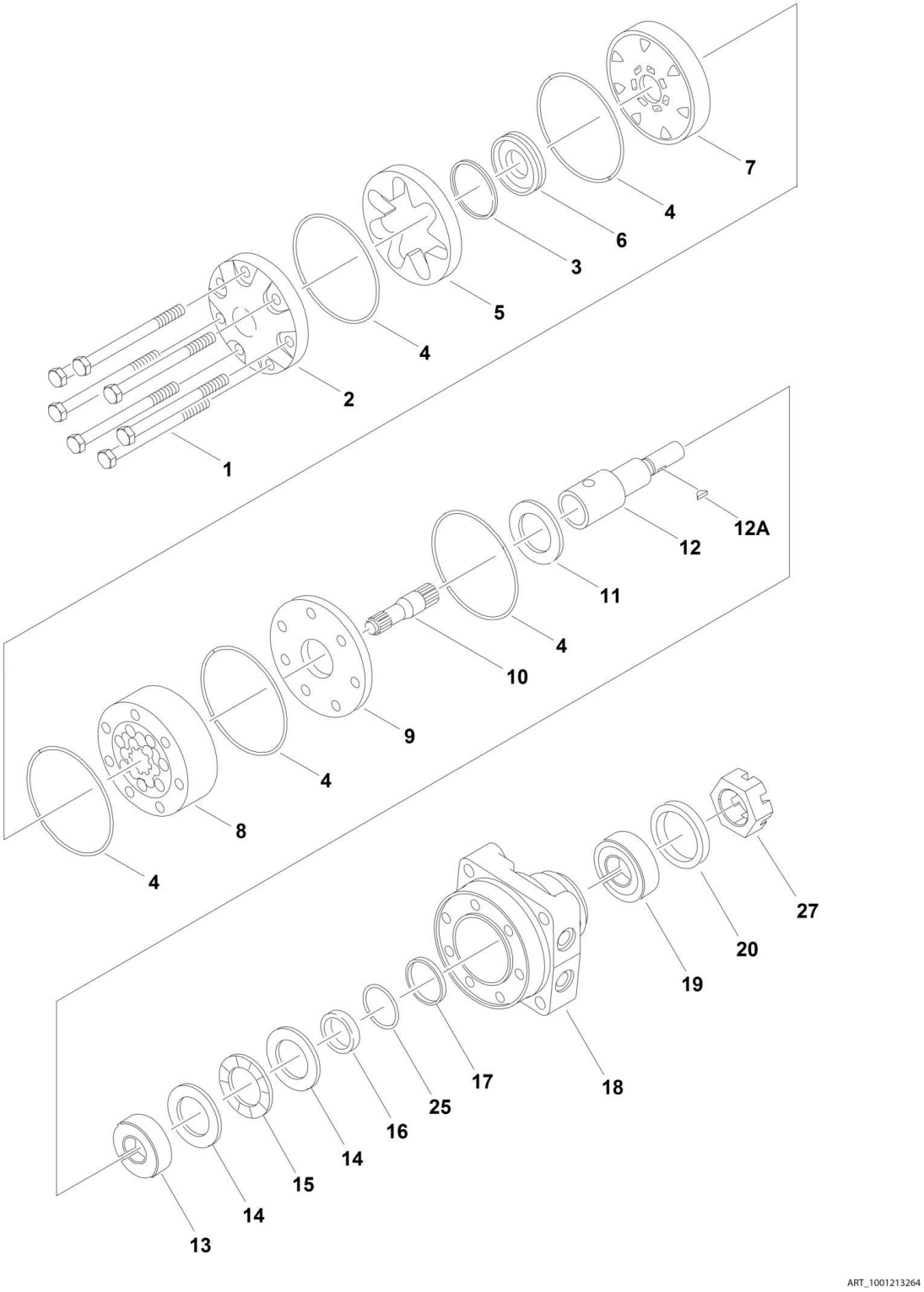

https://truckmanualshub.com/

FIGURE 1-3. DRIVE MOTOR ASSEMBLY

ITEM	PART NUMBER	QTY	DESCRIPTION	REV
	1001213264	Ref	DRIVE MOTOR ASSEMBLY	B
1	7023329	7	Bolt	
2	7023328	1	Cover	
3	7023318	1	Seal, Commutator	
4	7023310	5	Ring, Seal	
5	7023315	1	Commutator (Includes Item 6)	
6	See Note	NSS	Ring, Commutator (Use p/n 7023315)	
7	70005812	1	Manifold	
8	70006245	1	Rotor Set	
9	7023311	1	Plate, Wear	
10	70006244	1	Link, Drive	
11	7023308	1	Bearing, Thrust	
12	70005813	1	Shaft	
12A	7023324	1	Key, Shaft (Supplied with Shaft)	
12A	7026179	1	Key, Shaft (Supplied Individually)	
13	7026174	1	Bearing, Inner	
14	7006724	2	Thrustwasher	
15	7023407	1	Bearing, Thrust	
16	7006725	1	Seal	
17	7023321	1	Washer, Backup	
18	See Note	NSS	Housing (Note: Use p/n 1001213264)	
19	7023408	1	Bearing, Outer	
20	7023319	1	Seal, Dirt and Water	
25	7023322	1	Washer, Backup	
27	70005807	1	Nut	

https://truckmanualshub.com/

FIGURE 1-4. TIRE AND WHEEL INSTALLATION

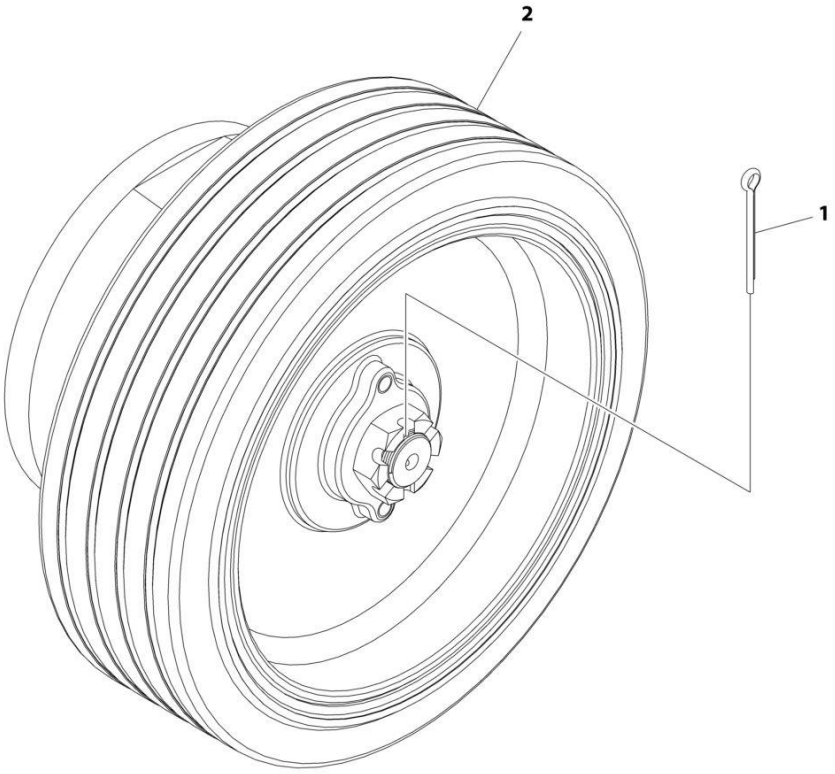

https://truckmanualshub.com/

FIGURE 1-4. TIRE AND WHEEL INSTALLATION

ITEM	PART NUMBER	QTY	DESCRIPTION	REV
	1001213928	Ref	TIRE AND WHEEL INSTALLATION	A
		Ref	Note: Must Replace Tire and Wheel Assemblies in pairs per axle.	
1	3450508	4	Pin, Cotter 5/32 x 2	
2	1001212187	4	Tire and Wheel	

https://truckmanualshub.com/

FIGURE 1-5. POTHOLE PROTECTION SYSTEM INSTALLATION

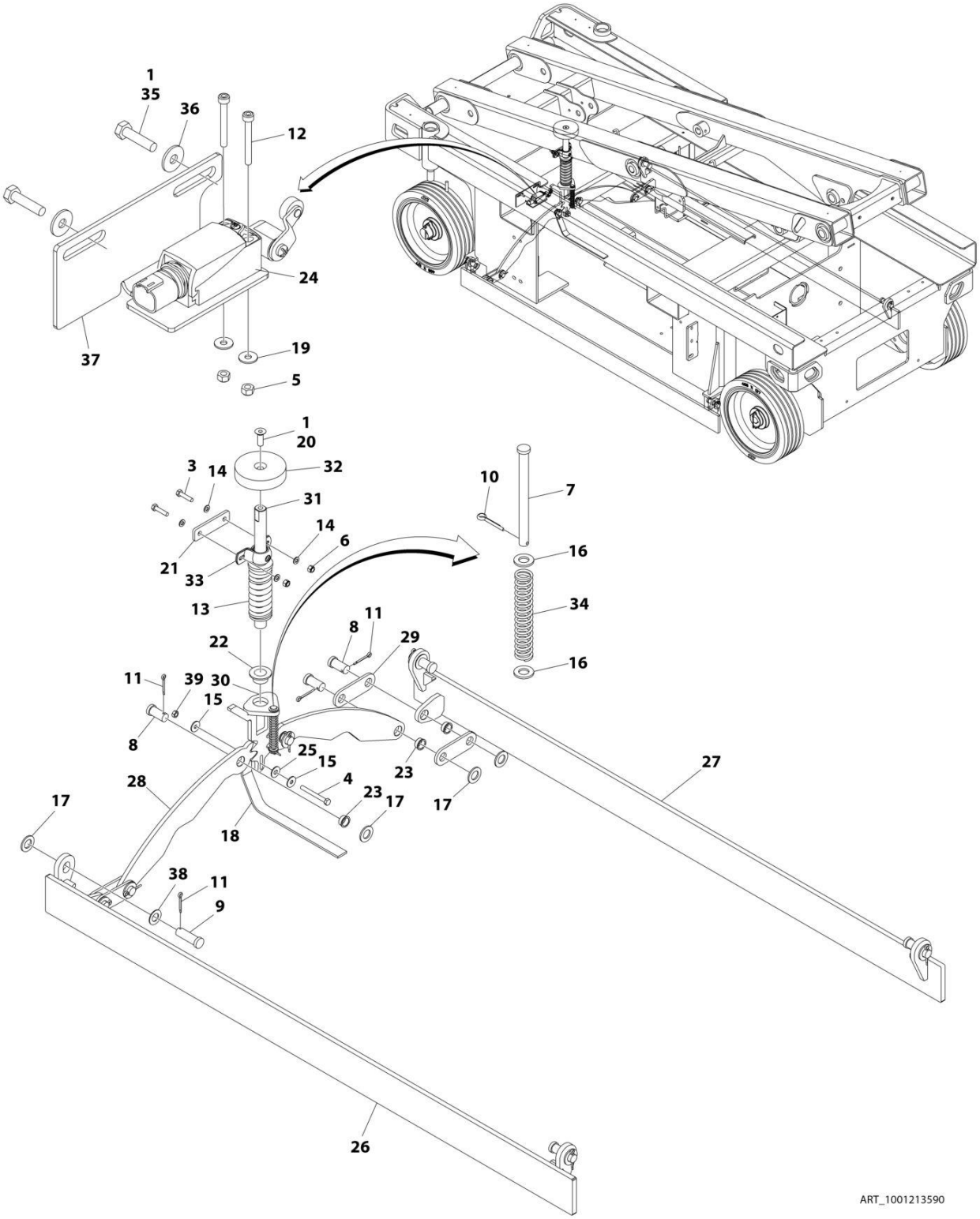

https://truckmanualshub.com/

FIGURE 1-5. POTHOLE PROTECTION SYSTEM INSTALLATION

ITEM	PART NUMBER	QTY	DESCRIPTION	REV
	1001213590	Ref	POTHOLE PROTECTION SYSTEM INSTALLATION	G
1	0100011	AR	Compound, Locking	
3	0700815	2	Bolt M8 x 35	
4	0700823	1	Bolt M8 x 75	
5	3290405	2	Nut M4	
6	3290805	2	Nut M8	
7	3430636	1	Pin	
8	3431212	6	Pin	
9	3431218	4	Pin	
10	3450403	1	Pin 1/8 x 3/4	
11	3450505	10	Pin 5/32 x 1/2	
12	4031511	2	Capscrew M4 x 35	
13	4160202	1	Spring	
14	4811900	4	Washer M8	
15	4811902	2	Washer M8	
16	4812000	2	Washer M10	
17	4812500	10	Washer M20	
18	4240147	1	Strap, Anti-Static	
19	1001091102	2	Washer M4	
20	1001110302	1	Screw M12 x 35	
21	1001202987	1	Plate, Mounting	
22	1001203869	1	Bearing	
23	1001203870	6	Bearing	
24	1001203871	1	Switch, Limit	
25	1001203872	1	Washer	
26	1001213591	1	Bar (LH)	
27	1001213595	1	Bar (RH)	
28	1001213597	2	Plate, Pinion **(Prior to SN 0200267774, Prior to SN B200049758)**	
28	1001242587	2	Plate, Pinion **(SN 0200267774 to Present, SN B200046758 to Present)**	
29	1001202999	4	Link	
30	1001214526	1	Actuator (Lower)	
31	1001214528	1	Actuator (Upper)	
32	1001214534	1	Pad	
33	1001215953	1	Bearing	
34	1001227855	1	Spring	
35	0700612	2	Bolt M6 x 25	
36	4811702	2	Washer M6	
37	1001218307	1	Plate, Sensor Mounting	
38	4740086	4	Washer	
39	3290801	1	Nut M8	

https://truckmanualshub.com/

FIGURE 1-6. TILT SENSOR INSTALLATION

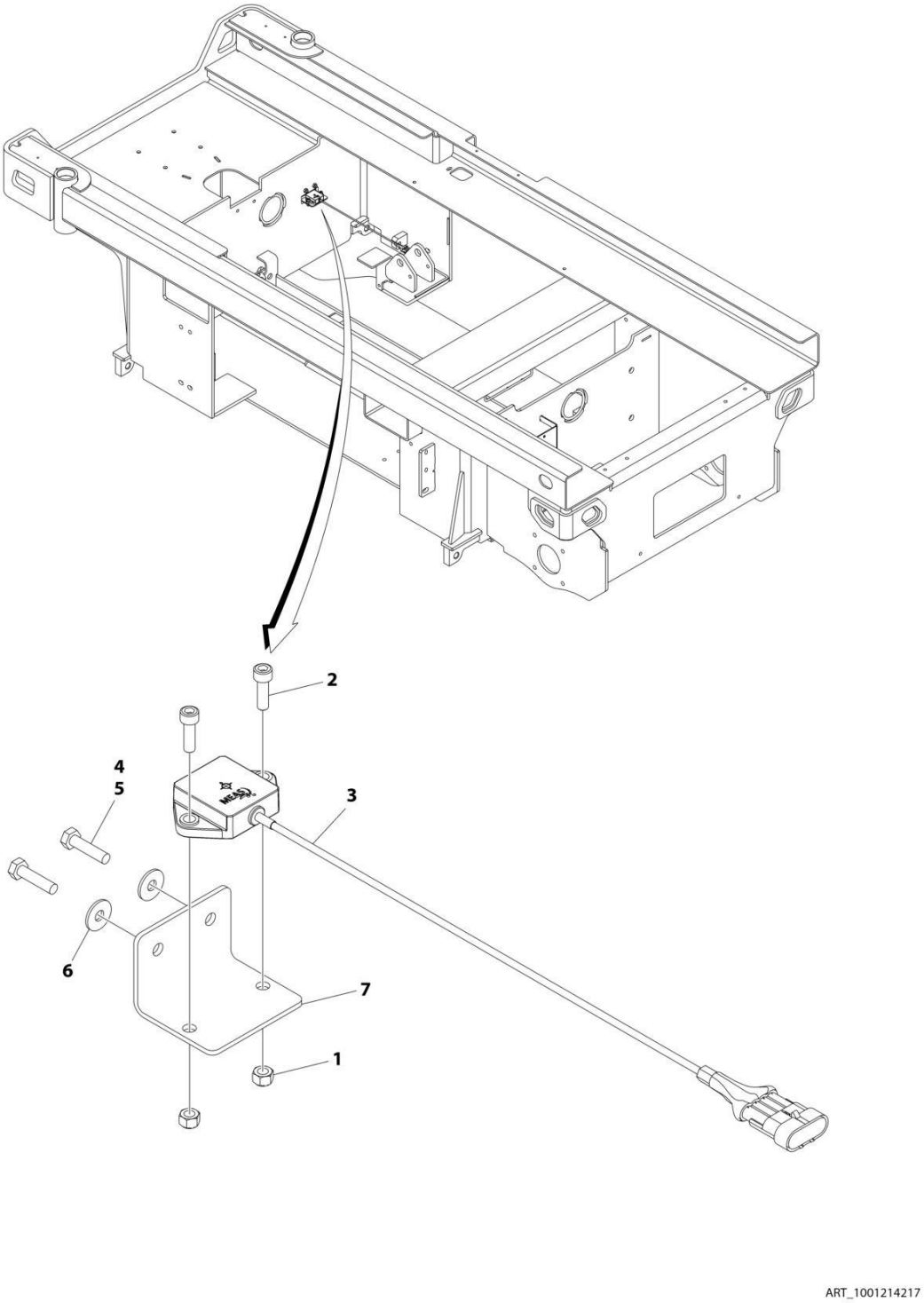

https://truckmanualshub.com/

FIGURE 1-6. TILT SENSOR INSTALLATION

ITEM	PART NUMBER	QTY	DESCRIPTION	REV
	1001214217	Ref	TILT SENSOR INSTALLATION	B
1	3290605	2	Nut M6	
2	4031708	2	Capscrew M6 x 20	
3	1001186466	1	Sensor, Tilt	
4	0100011	AR	Compound, Locking	
5	0700612	2	Bolt M6 x 25	
6	4811702	2	Washer M6	
7	1001217059	1	Plate, Mounting	

https://truckmanualshub.com/

FIGURE 1-7. BATTERY CHARGER INSTALLATION - DELTA-Q (LOCALLY SUPPLIED PLUG)

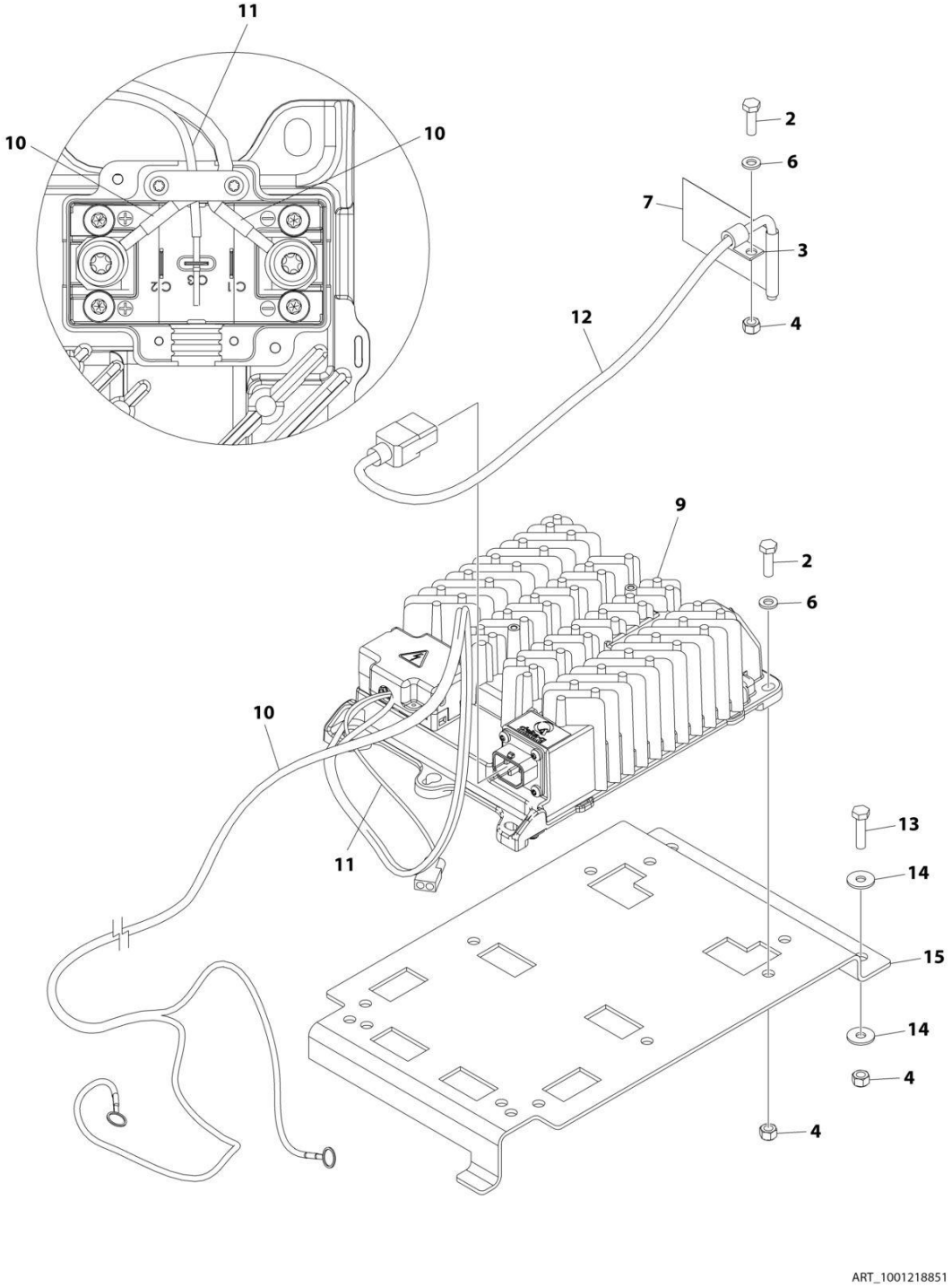

https://truckmanualshub.com/

FIGURE 1-7. BATTERY CHARGER INSTALLATION - DELTA-Q (LOCALLY SUPPLIED PLUG)

ITEM	PART NUMBER	QTY	DESCRIPTION	REV
	1001218851	Ref	BATTERY CHARGER INSTALLATION - DELTA-Q (LOCALLY SUPPLIED PLUG)	C
2	0760610	5	Bolt M6 x 20	
3	1321293	1	Clamp	
4	3290605	7	Nut M6	
5	4240017	AR	Tie-Strap (Not Shown)	
6	4811700	5	Washer M6	
7	1001102489	1	Decal - Charger Label	
9	1001200561	1	Charger, Battery - Delta-Q	
10	1001215074	1	Battery Charger DC Harness	
11	1001207009	1	Charger Interlock Harness	
11	4460424	1	Receptacle, Female - 2 Position	
11	4460227	2	Pin, Male	
12	1001207974	1	Battery Charger to AC Connection Cable (Note: See SPECIAL OPTIONS for Korean Specs Cable)	
13	0760612	2	Bolt M6 x 25	
14	4811702	4	Washer M6	
15	1001214195	1	Bracket	

https://truckmanualshub.com/

FIGURE 1-8. BATTERY CHARGER INSTALLATION - DELTA-Q (110V PLUG)

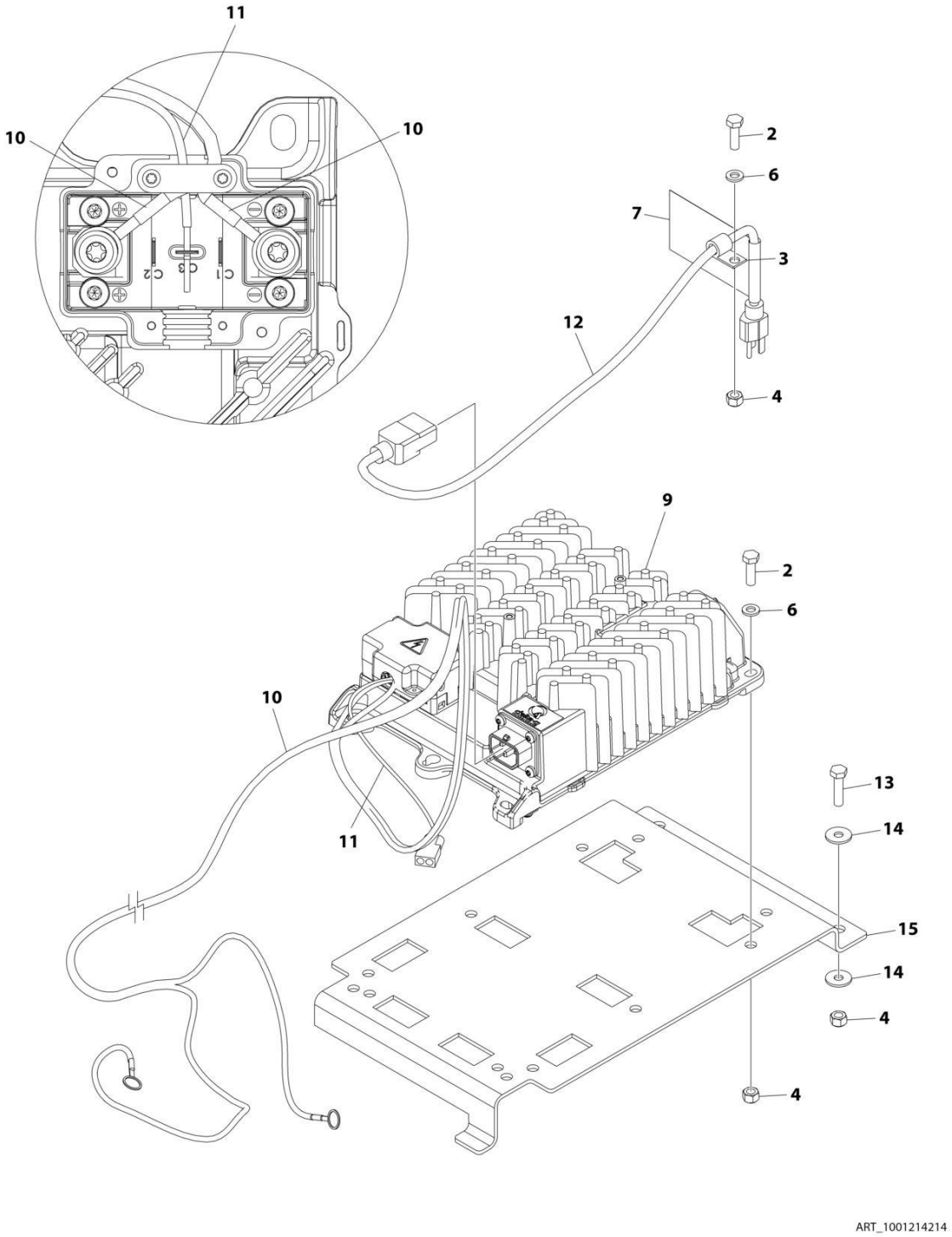

https://truckmanualshub.com/

FIGURE 1-8. BATTERY CHARGER INSTALLATION - DELTA-Q (110V PLUG)

ITEM	PART NUMBER	QTY	DESCRIPTION	REV
	1001214214	Ref	BATTERY CHARGER INSTALLATION - DELTA-Q (110V PLUG)	C
2	0760610	5	Bolt M6 x 20	
3	1321293	1	Clamp	
4	3290605	7	Nut M6	
5	4240017	AR	Tie-Strap (Not Shown)	
6	4811700	5	Washer M6	
7	1001102489	1	Decal - Charger Label	
9	1001200561	1	Charger, Battery - Delta-Q	
10	1001215074	1	Battery Charger DC Harness	
11	1001207009	1	Charger Interlock Harness	
11	4460424	1	Receptacle, Female - 2 Position	
11	4460227	2	Pin, Male	
12	1001207920	1	Battery Charger to AC Connection Cable	
13	0760612	2	Bolt M6 x 25	
14	4811702	4	Washer M6	
15	1001214195	1	Bracket	

https://truckmanualshub.com/

FIGURE 1-9. BATTERY CHARGER INSTALLATION - DELTA-Q (KOREAN PLUG)

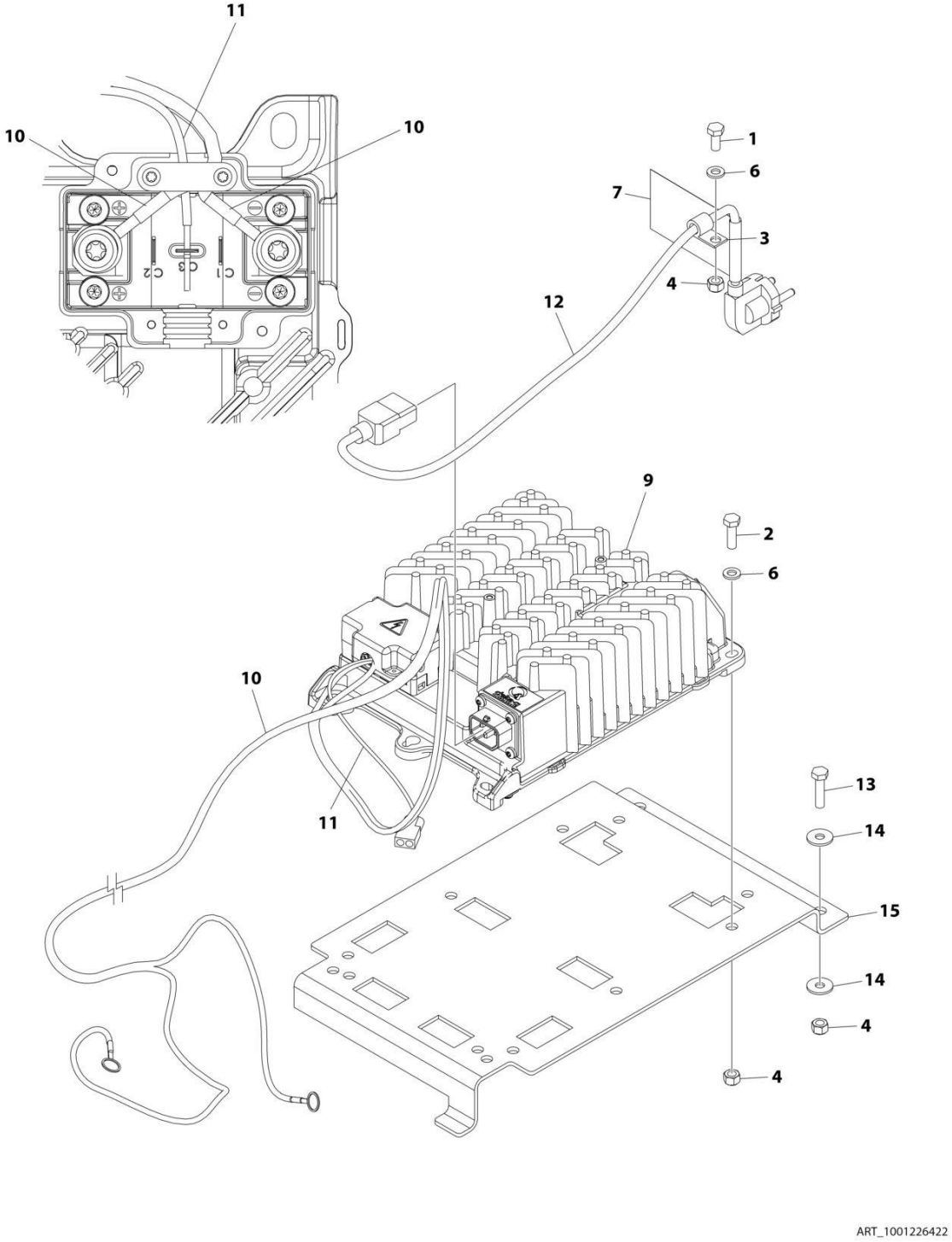

https://truckmanualshub.com/

FIGURE 1-9. BATTERY CHARGER INSTALLATION - DELTA-Q (KOREAN PLUG)

ITEM	PART NUMBER	QTY	DESCRIPTION	REV
	1001226422	Ref	BATTERY CHARGER INSTALLATION - DELTA-Q (KOREAN PLUG)	A
1	0760607	1	Bolt M6 x 14	
2	0760610	4	Bolt M6 x 20	
3	1321293	1	Clamp	
4	3290605	7	Nut M6	
5	4240017	AR	Tie-Strap (Not Shown)	
6	4811700	5	Washer M6	
7	1001102489	1	Decal - Charger Label	
9	1001200561	1	Charger, Battery - Delta-Q	
10	1001215074	1	Battery Charger DC Harness	
11	1001207009	1	Charger Interlock Harness	
11	4460424	1	Receptacle, Female - 2 Position	
11	4460227	2	Pin, Male	
12	1001221949	1	Battery Charger to AC Connection Cable	
13	0760612	2	Bolt M6 x 25	
14	4811702	4	Washer M6	
15	1001214195	1	Bracket	

https://truckmanualshub.com/

FIGURE 1-10. BATTERY CHARGER INSTALLATION - EAGLE PERFORMANCE (110V PLUG)

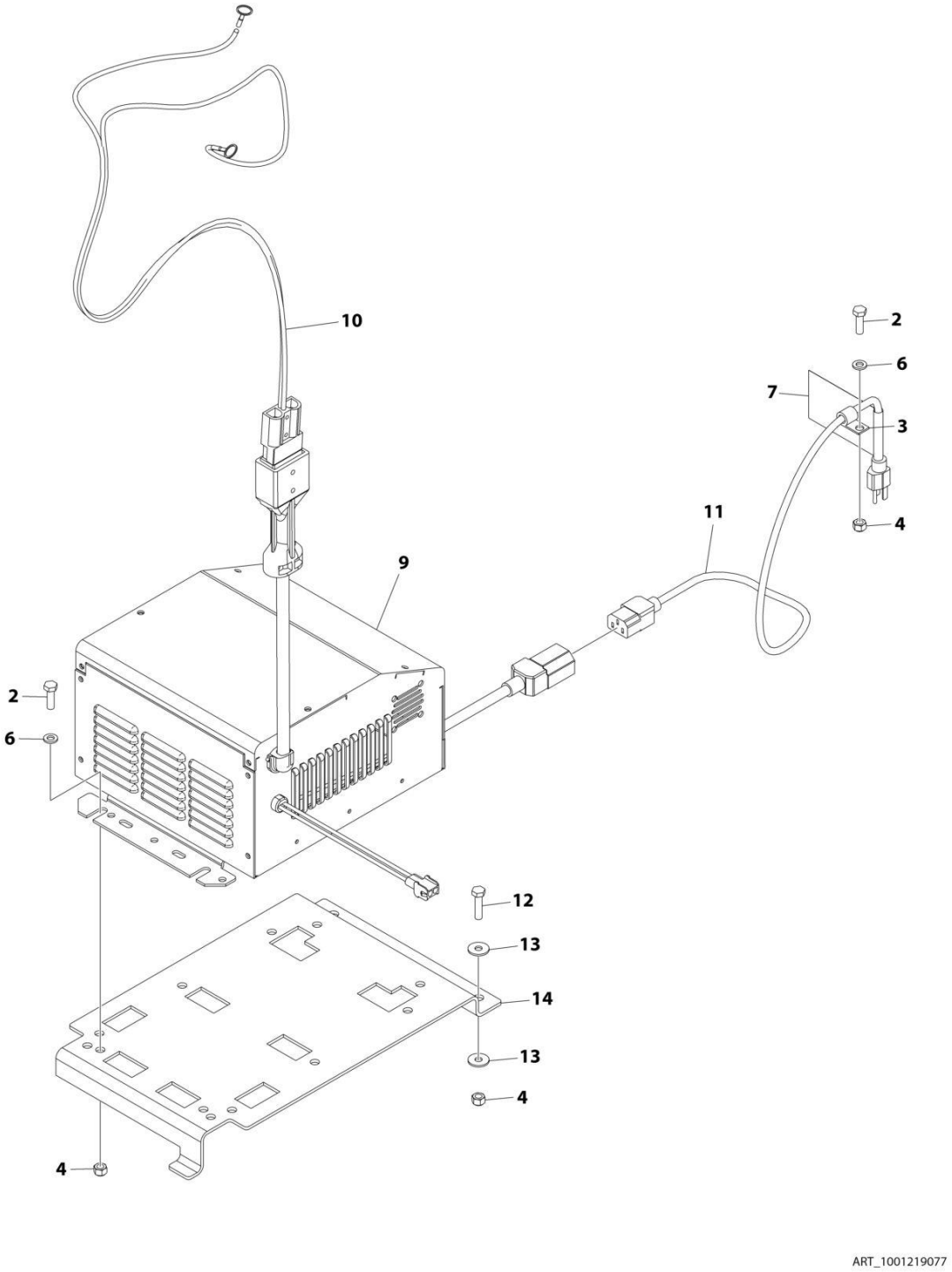

https://truckmanualshub.com/

FIGURE 1-10. BATTERY CHARGER INSTALLATION - EAGLE PERFORMANCE (110V PLUG)

ITEM	PART NUMBER	QTY	DESCRIPTION	REV
	1001219077	Ref	BATTERY CHARGER INSTALLATION - EAGLE PERFORMANCE (110V PLUG)	C
2	0760610	5	Bolt M6 x 20	
3	1321293	1	Clamp	
4	3290605	7	Nut M6	
5	4240017	AR	Tie-Strap (Not Shown)	
6	4811700	5	Washer M6	
7	1001102489	1	Decal - Charger Label	
9	1001206995	1	Charger, Battery - Eagle Performance	
10	1001215075	1	Battery Charger DC Connection Harness	
11	1001207970	1	Battery Charger to AC Connection Cable	
12	0760612	2	Bolt M6 x 25	
13	4811702	4	Washer M6	
14	1001214195	1	Bracket	

https://truckmanualshub.com/

FIGURE 1-11. BATTERY CHARGER INSTALLATION - GREEN POWER (LOCALLY SUPPLIED PLUG)

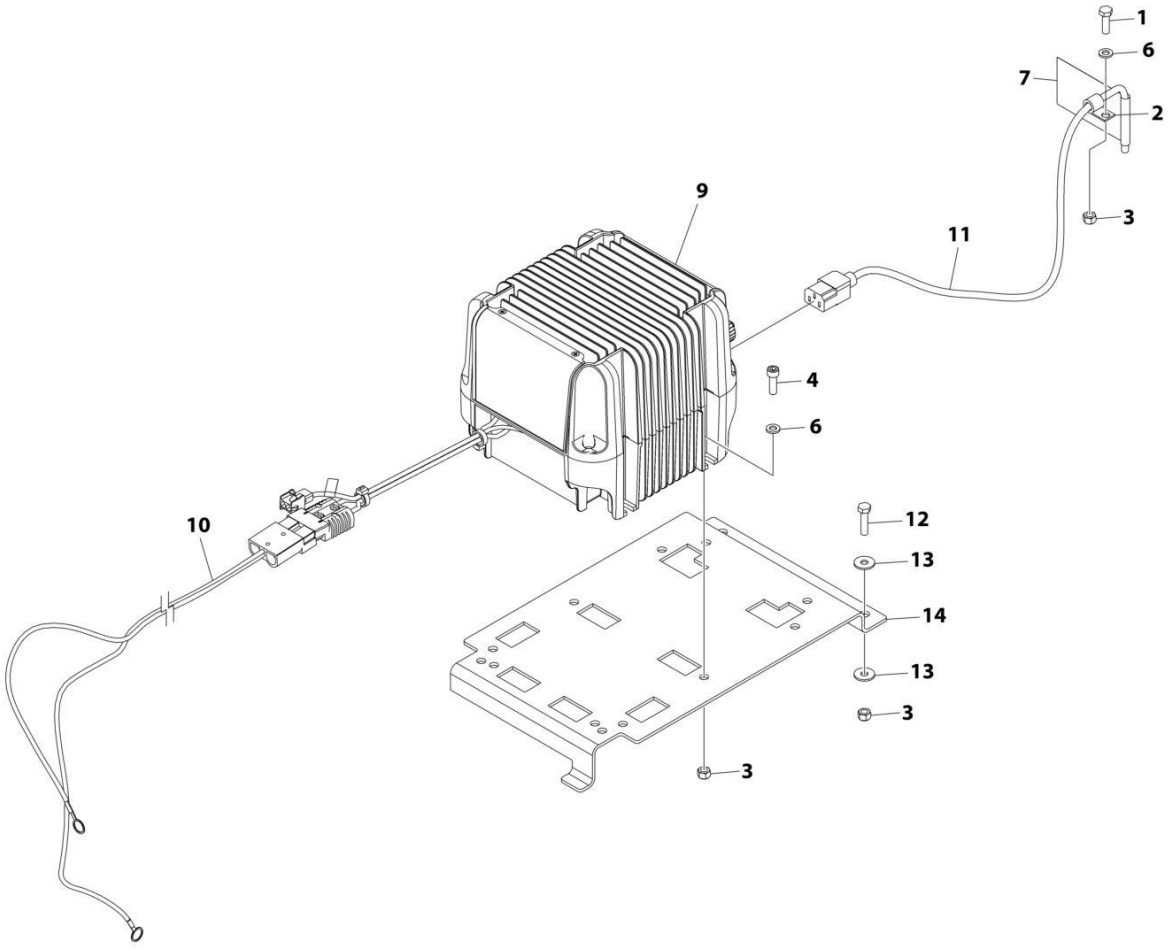

ART_1001218989

https://truckmanualshub.com/

FIGURE 1-11. BATTERY CHARGER INSTALLATION - GREEN POWER (LOCALLY SUPPLIED PLUG)

ITEM	PART NUMBER	QTY	DESCRIPTION	REV
	1001218989	Ref	BATTERY CHARGER INSTALLATION - GREEN POWER (LOCALLY SUPPLIED PLUG)	C
1	0760610	1	Bolt M6 x 20	
2	1321293	1	Clamp	
3	3290605	7	Nut M6	
4	4031708	4	Capscrew M6 x 20	
5	4240017	AR	Tie-Strap (Not Shown)	
6	4811700	5	Washer M6	
7	1001102489	1	Decal - Charger Label	
9	1001205598	1	Charger, Battery - Green Power	
10	1001215075	1	Battery Charger DC Connection Harness	
11	1001207974	1	Battery Charger to AC Connection Cable (Note: See SPECIAL OPTIONS for Korean Specs Cable)	
12	0760612	2	Bolt M6 x 25	
13	4811702	4	Washer M6	
14	1001214195	1	Bracket	

https://truckmanualshub.com/

FIGURE 1-12. BATTERY CHARGER INSTALLATION - GREEN POWER (CHINA PLUG)

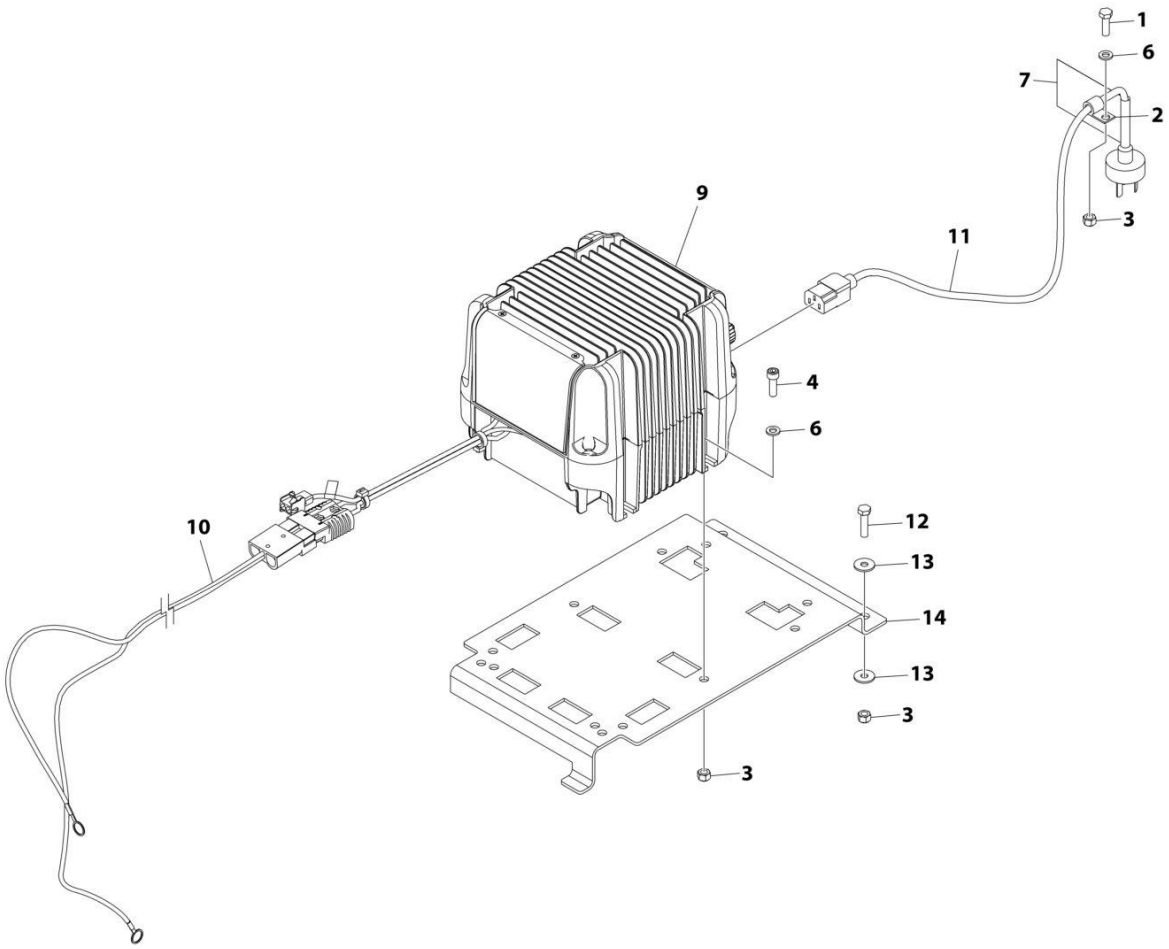

ART_1001218933

https://truckmanualshub.com/

FIGURE 1-12. BATTERY CHARGER INSTALLATION - GREEN POWER (CHINA PLUG)

ITEM	PART NUMBER	QTY	DESCRIPTION	REV
	1001218933	Ref	BATTERY CHARGER INSTALLATION - GREEN POWER (CHINA PLUG)	C
1	0760610	1	Bolt M6 x 20	
2	1321293	1	Clamp	
3	3290605	7	Nut M6	
4	4031708	4	Capscrew M6 x 20	
5	4240017	AR	Tie-Strap (Not Shown)	
6	4811700	5	Washer M6	
7	1001102489	1	Decal - Charger Label	
9	1001205598	1	Charger, Battery - Green Power	
10	1001215075	1	Battery Charger DC Connection Harness	
11	1001207973	1	Battery Charger to AC Connection Cable (Note: See SPECIAL OPTIONS for Korean Specs Cable)	
12	0760612	2	Bolt M6 x 25	
13	4811702	4	Washer M6	
14	1001214195	1	Bracket	

https://truckmanualshub.com/

FIGURE 1-13. STROBE LIGHT INSTALLATION - SINGLE ECCO BRAND (AMBER) (WITHOUT GUARD)

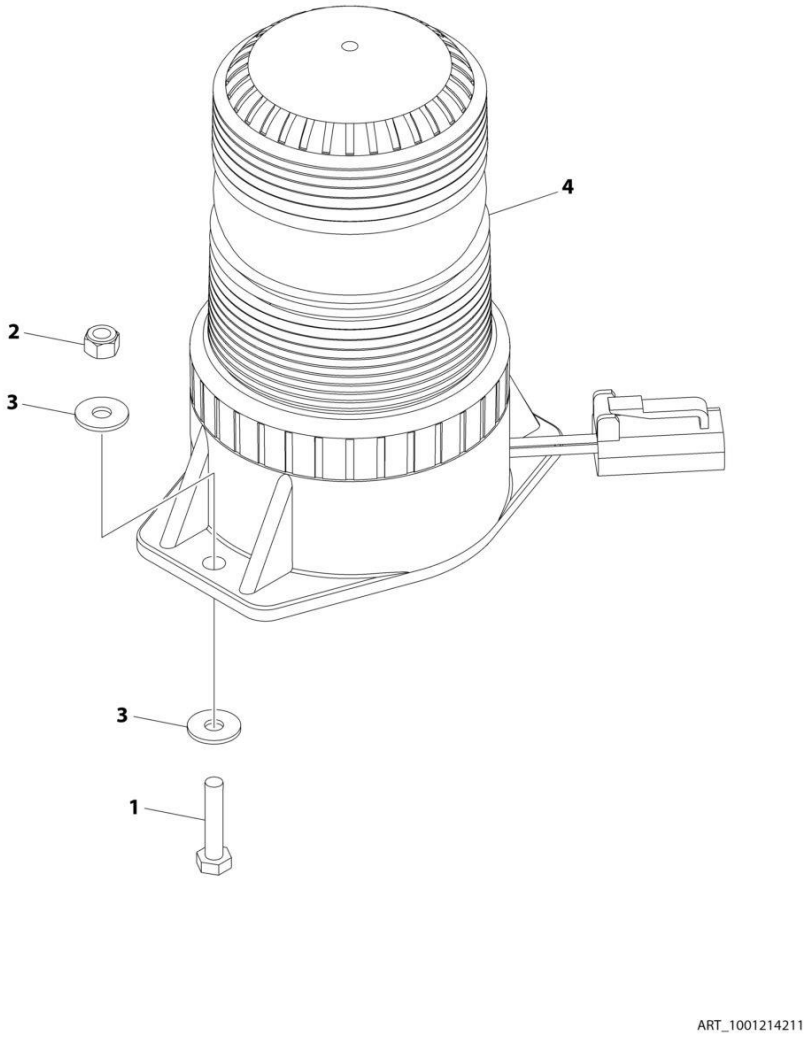

https://truckmanualshub.com/

FIGURE 1-13. STROBE LIGHT INSTALLATION - SINGLE ECCO BRAND (AMBER) (WITHOUT GUARD)

ITEM	PART NUMBER	QTY	DESCRIPTION	REV
	1001214211	Ref	STROBE LIGHT INSTALLATION - SINGLE (AMBER) (WITHOUT GUARD)	B
1	0700410	2	Bolt M4 x 20	
2	3290405	2	Nut M4	
3	1001091102	4	Washer M4	
4	1001191139	1	Light, Strobe (Amber)	
4	4460891	1	Plug, Male - 2 Position	
4	4460465	2	Socket, Female	

https://truckmanualshub.com/

FIGURE 1-14. STROBE LIGHT INSTALLATION - SINGLE SAMMOON BRAND (WITHOUT GUARD)

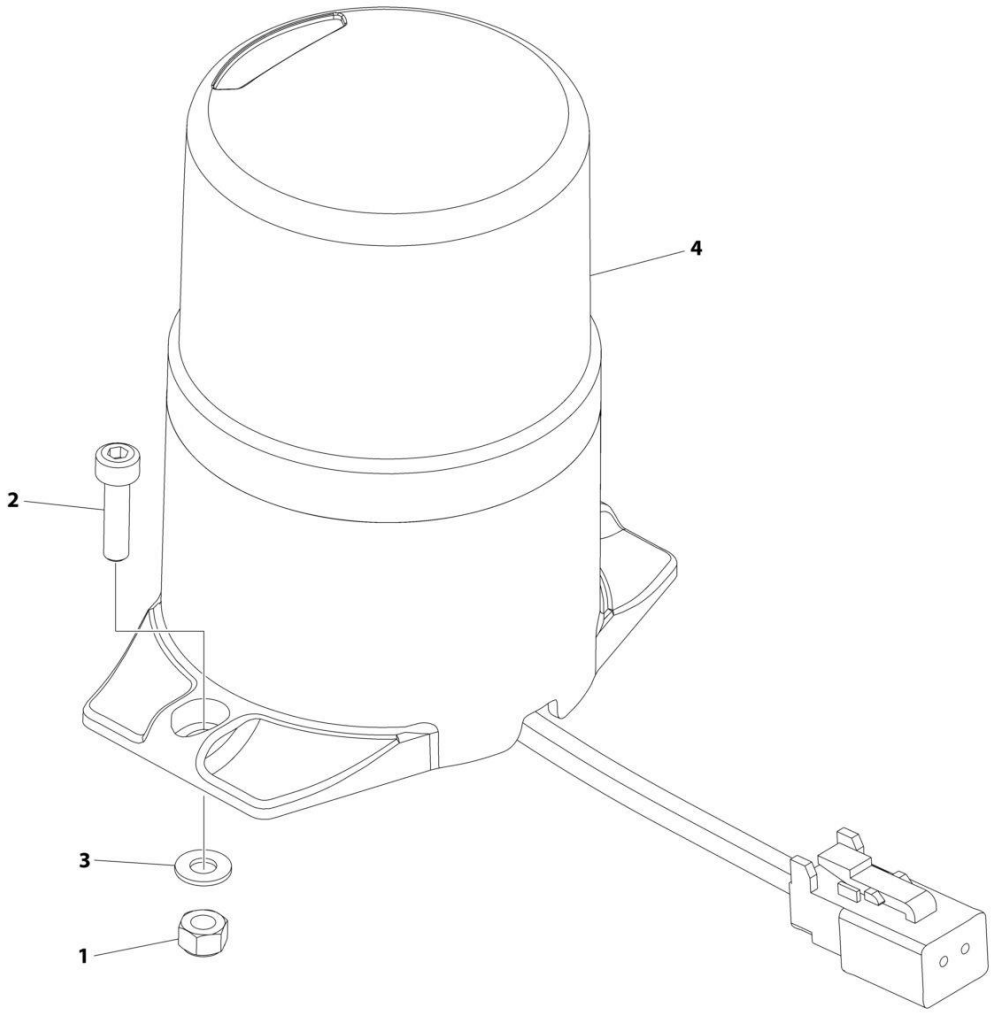

ART_1001238862

https://truckmanualshub.com/

FIGURE 1-14. STROBE LIGHT INSTALLATION - SINGLE SAMMOON BRAND (WITHOUT GUARD)

ITEM	PART NUMBER	QTY	DESCRIPTION	REV
	1001238862	Ref	STROBE LIGHT INSTALLATION - SINGLE (WITHOUT GUARD)	A
1	3290405	2	Nut M4	
2	4031507	2	Bolt M4 x 16	
3	4811400	2	Washer M4	
4	1001233479	1	Light, Strobe	
4	4460891	1	Plug, Male - 2 Position	
4	4460465	2	Socket, Female	

https://truckmanualshub.com/

FIGURE 1-15. STROBE LIGHT INSTALLATION - SINGLE ECCO BRAND (AMBER) (WITH GUARD)

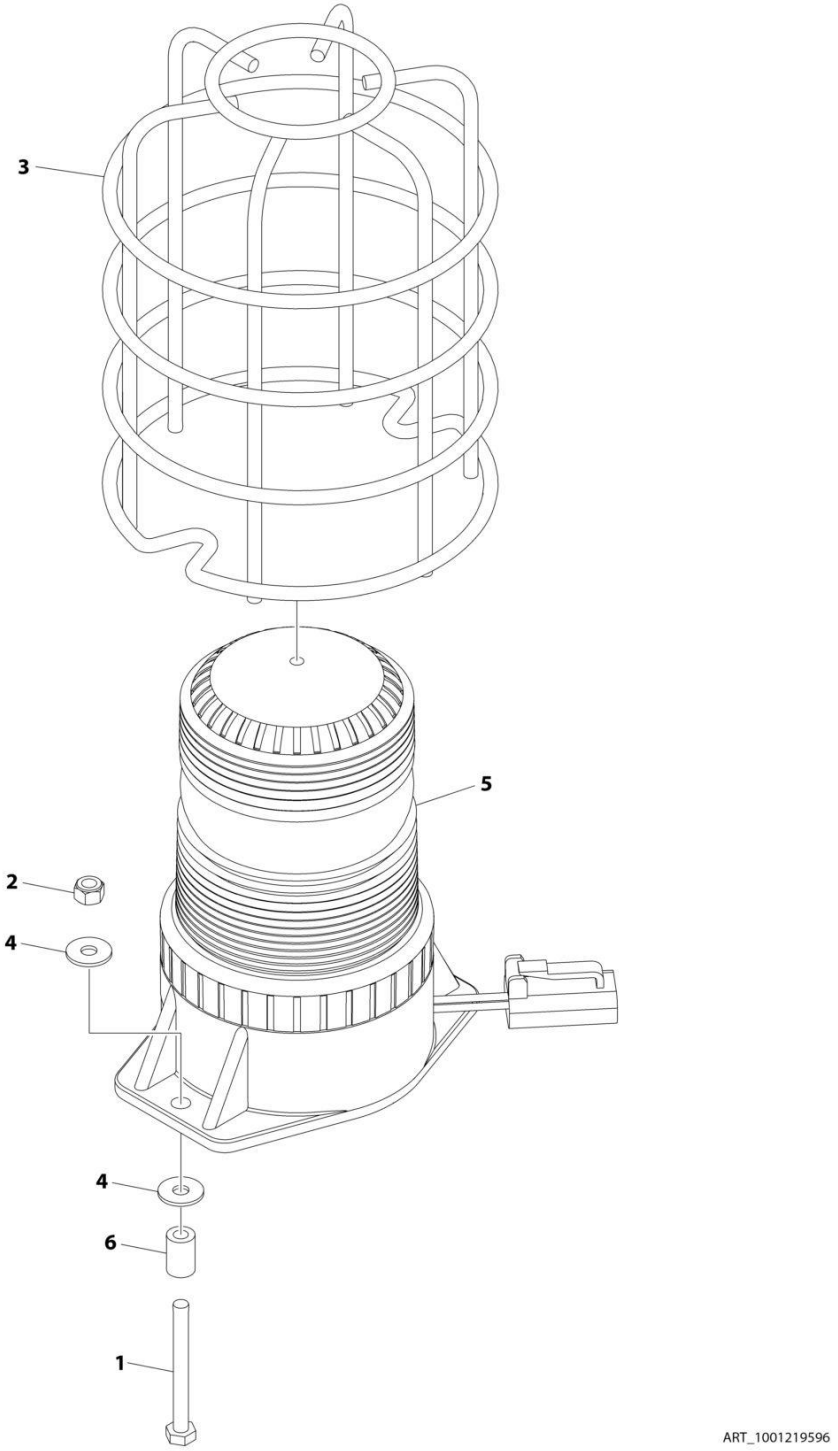

https://truckmanualshub.com/

FIGURE 1-15. STROBE LIGHT INSTALLATION - SINGLE ECCO BRAND (AMBER) (WITH GUARD)

ITEM	PART NUMBER	QTY	DESCRIPTION	REV
	1001219596	Ref	STROBE LIGHT INSTALLATION - SINGLE (AMBER) (WITH GUARD)	B
1	0700416	2	Bolt M4 x 40	
2	3290405	2	Nut M4	
3	4060865	1	Guard	
4	1001091102	4	Washer M4	
5	1001191139	1	Light, Strobe (Amber)	
5	4460891	1	Plug, Male - 2 Position	
5	4460465	2	Socket, Female	
6	1001220766	2	Sleeve	

https://truckmanualshub.com/

FIGURE 1-16. STROBE LIGHT INSTALLATION - SINGLE SAMMOON BRAND (WITH GUARD

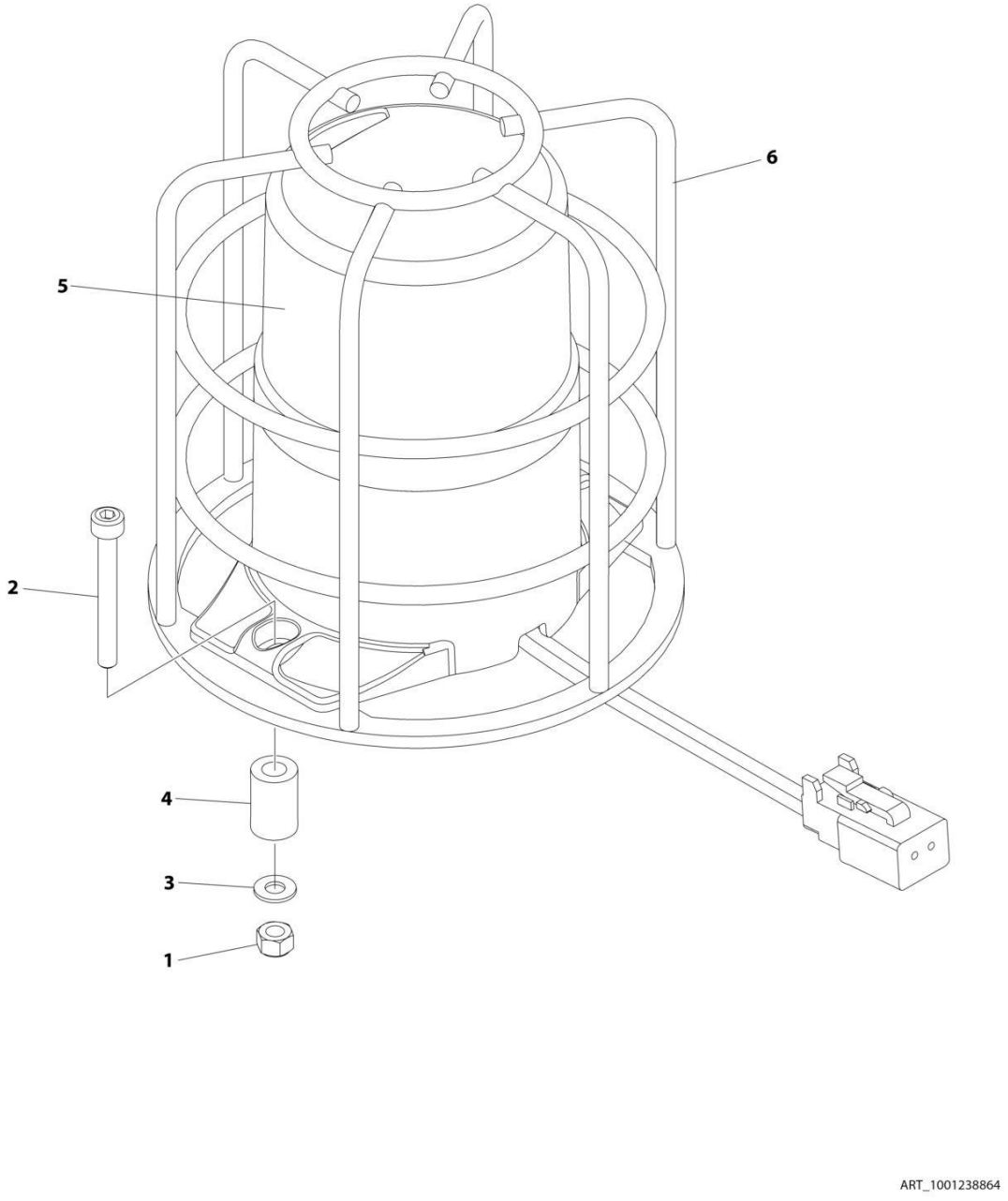

https://truckmanualshub.com/

FIGURE 1-16. STROBE LIGHT INSTALLATION - SINGLE SAMMOON BRAND (WITH GUARD

ITEM	PART NUMBER	QTY	DESCRIPTION	REV
	1001238864	Ref	STROBE LIGHT INSTALLATION - SINGLE (WITH GUARD)	A
1	3290405	2	Nut M4	
2	4031511	2	Bolt M4 x 35	
3	4811400	2	Washer M4	
4	1001220766	2	Sleeve	
5	1001233479	1	Light, Strobe	
5	4460891	1	Plug, Male - 2 Position	
5	4460465	1	Socket, Female	
6	1001233998	1	Guard	

https://truckmanualshub.com/

FIGURE 1-17. STROBE LIGHT INSTALLATION - DUAL ECCO BRAND (AMBER) (WITHOUT GUARD)

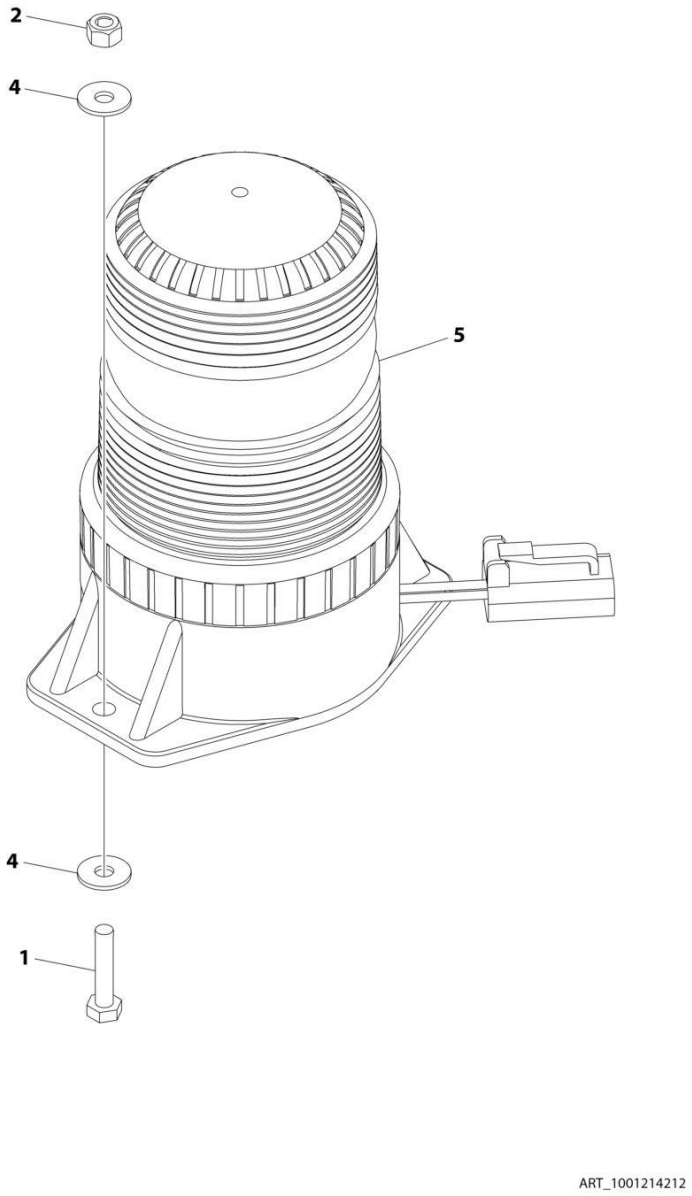

https://truckmanualshub.com/

FIGURE 1-17. STROBE LIGHT INSTALLATION - DUAL ECCO BRAND (AMBER) (WITHOUT GUARD)

ITEM	PART NUMBER	QTY	DESCRIPTION	REV
	1001214212	Ref	STROBE LIGHT INSTALLATION - DUAL (AMBER) (WITHOUT GUARD)	B
1	0700410	4	Bolt M4 x 20	
2	3290405	4	Nut M4	
3	4240018	4	Tie-Strap (Not Shown)	
4	1001091102	8	Washer M4	
5	1001191139	2	Light, Strobe (Amber)	
5	4460891	1	Plug, Male - 2 Position	
5	4460465	2	Socket, Female	
6	1001215216	1	Strobe Light Jumper Harness (Not Shown)	
6	4460897	2	Receptacle, Female - 2 Position	
6	4460464	4	Pin, Male	
6	4460891	1	Plug, Male - 2 Position	
6	4460465	2	Socket, Female	

https://truckmanualshub.com/

FIGURE 1-18. STROBE LIGHT INSTALLATION - DUAL SAMMOON BRAND (WITHOUT GUARD)

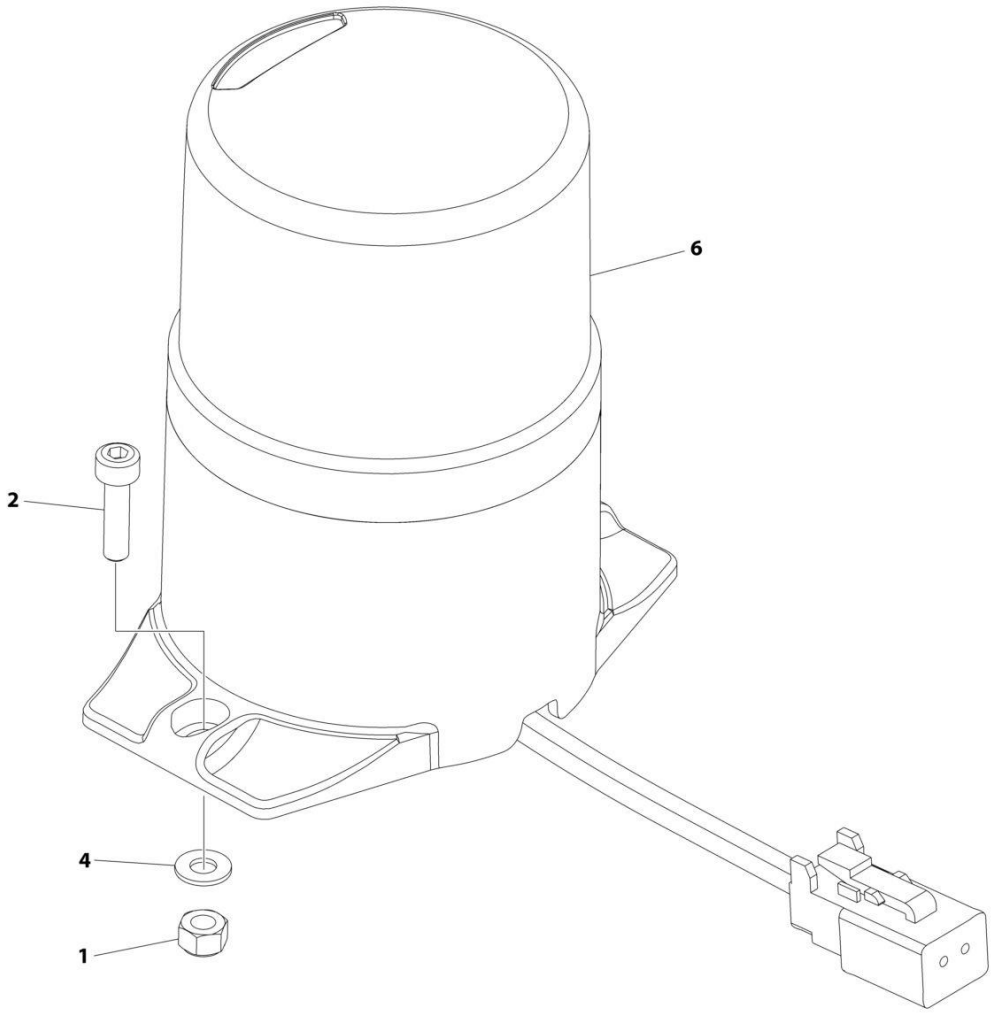

ART_1001238863

https://truckmanualshub.com/

FIGURE 1-18. STROBE LIGHT INSTALLATION - DUAL SAMMOON BRAND (WITHOUT GUARD)

ITEM	PART NUMBER	QTY	DESCRIPTION	REV
	1001238863	Ref	STROBE LIGHT INSTALLATION - DUAL (WITHOUT GUARD)	A
1	3290405	4	Nut M4	
2	4031507	4	Bolt M4 x 16	
3	4240018	4	Tie-Strap (Not Shown)	
4	4811400	4	Washer M4	
5	1001215216	1	Strobe Light Jumper Harness (Not Shown)	
5	4460897	2	Receptacle, Female - 2 Position	
5	4460464	4	Pin, Male	
5	4460891	1	Plug, Male - 2 Position	
5	4460465	2	Socket, Female	
6	1001233479	2	Light, Strobe	
6	4460891	1	Plug, Male - 2 Position	
6	4460465	2	Socket, Female	

https://truckmanualshub.com/

FIGURE 1-19. STROBE LIGHT INSTALLATION - DUAL ECCO BRAND (AMBER) (WITH GUARD)

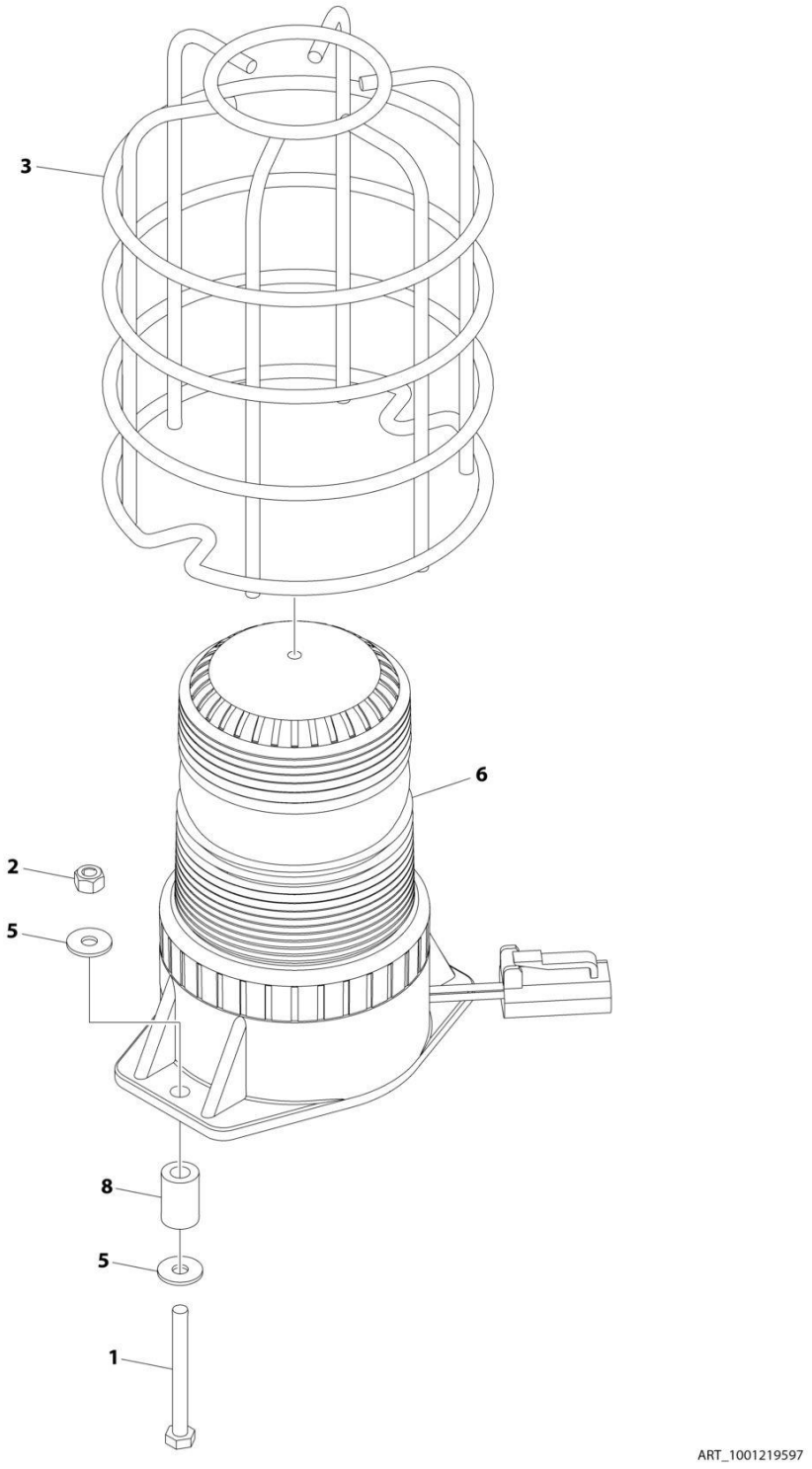

https://truckmanualshub.com/

FIGURE 1-19. STROBE LIGHT INSTALLATION - DUAL ECCO BRAND (AMBER) (WITH GUARD)

ITEM	PART NUMBER	QTY	DESCRIPTION	REV
	1001219597	Ref	STROBE LIGHT INSTALLATION - DUAL (AMBER) (WITH GUARD)	B
1	0700416	4	Bolt M4 x 40	
2	3290405	4	Nut M4	
3	4060865	2	Guard	
4	4240018	4	Tie-Strap (Not Shown)	
5	1001091102	8	Washer M4	
6	1001191139	2	Light, Strobe (Amber)	
6	4460891	1	Plug, Male - 2 Position	
6	4460465	2	Socket, Female	
6	4460865	1	Guard (Must be Purchased Separately) (Not Shown)	
7	1001215216	1	Strobe Light Jumper Harness (Not Shown)	
7	4460897	2	Receptacle, Female - 2 Position	
7	4460464	4	Pin, Male	
7	4460891	1	Plug, Male - 2 Position	
7	4460465	2	Socket, Female	
8	1001220766	4	Sleeve	

https://truckmanualshub.com/

FIGURE 1-20. STROBE LIGHT INSTALLATION - DUAL SAMMOON BRAND (WITH GUARD)

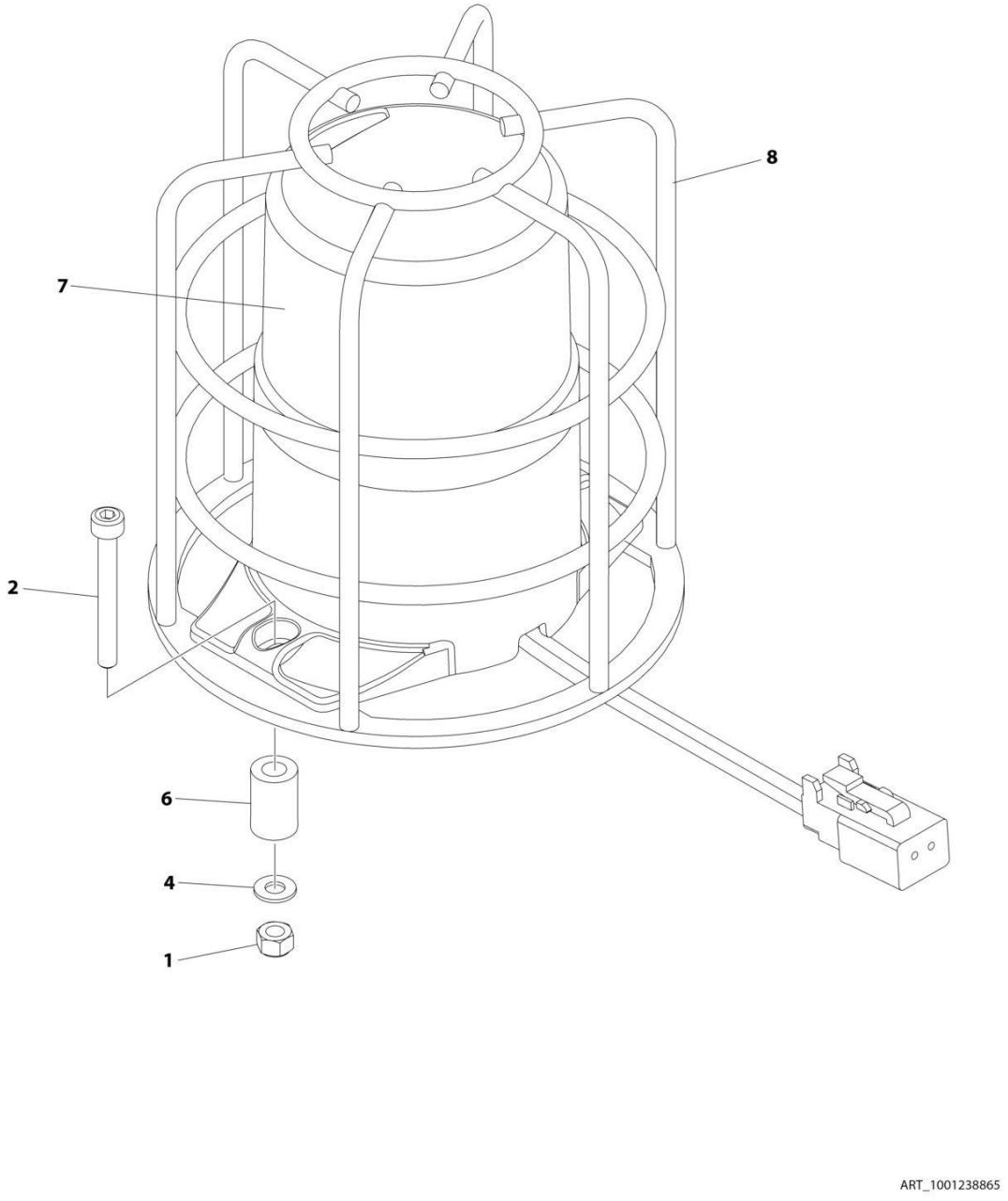

https://truckmanualshub.com/

FIGURE 1-20. STROBE LIGHT INSTALLATION - DUAL SAMMOON BRAND (WITH GUARD)

ITEM	PART NUMBER	QTY	DESCRIPTION	REV
	1001238865	Ref	STROBE LIGHT INSTALLATION - DUAL (WITH GUARD)	A
1	3290405	4	Nut M4	
2	4031511	4	Bolt M4 x 35	
3	4240018	4	Tie-Strap (Not Shown)	
4	4811400	4	Washer M4	
5	1001215216	1	Strobe Light Jumper Harness (Not Shown)	
5	4460897	2	Receptacle, Female - 2 Position	
5	4460464	4	Pin, Male	
5	4460891	1	Plug, Male - 2 Position	
5	4460465	2	Socket, Female	
6	1001220766	4	Sleeve	
7	1001233479	2	Light, Strobe	
7	4460891	1	Plug, Male - 2 Position	
7	4460465	2	Socket, Female	
7	4460865	1	Guard (Must be Purchased Separately) (Not Shown)	
8	1001233998	2	Guard	

https://truckmanualshub.com/

FIGURE 1-21. ALARM INSTALLATION (AMBIENT/WHITE NOISE)

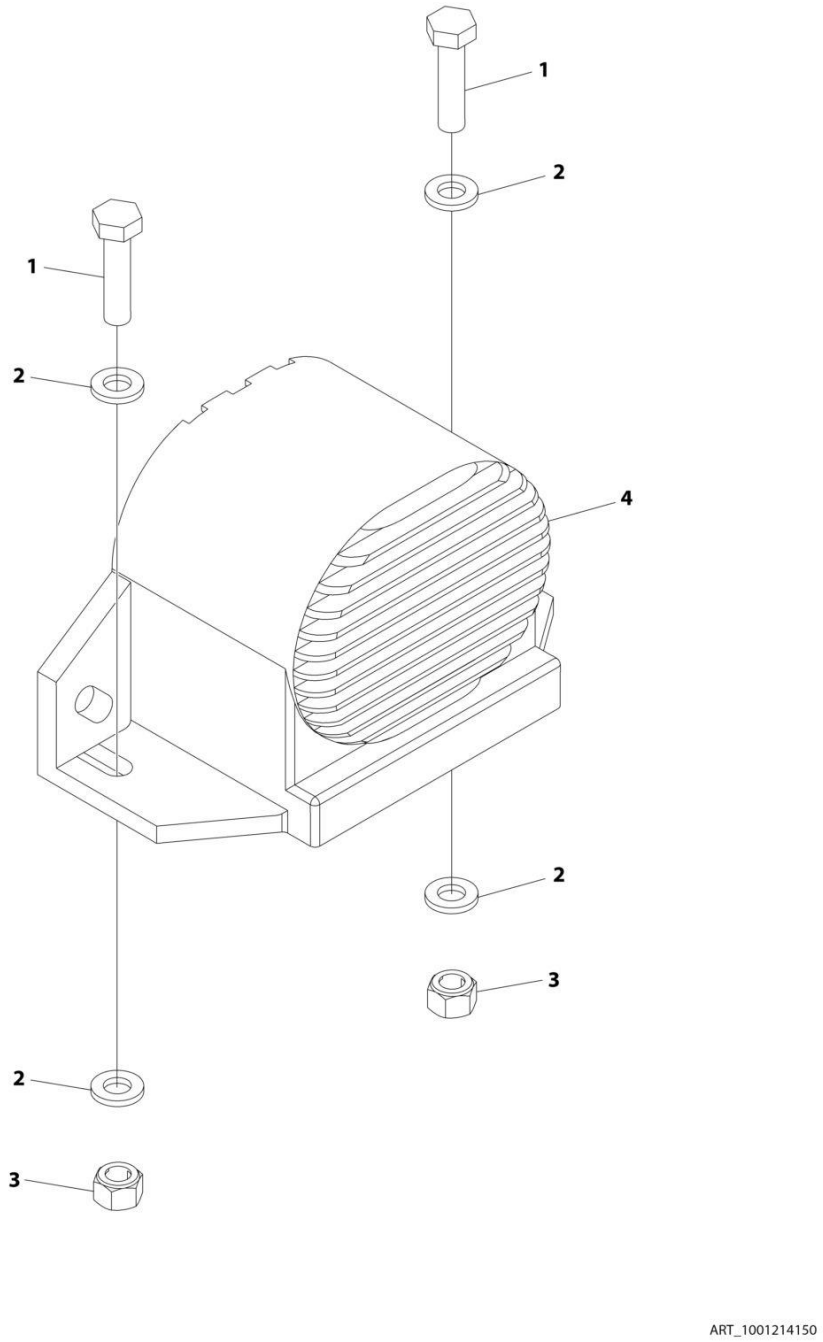

https://truckmanualshub.com/

FIGURE 1-21. ALARM INSTALLATION (AMBIENT/WHITE NOISE)

ITEM	PART NUMBER	QTY	DESCRIPTION	REV
	1001214150	Ref	ALARM INSTALLATION (AMBIENT/WHITE NOISE)	B
1	0760612	2	Bolt M6 x 25	
2	4811700	4	Washer M6	
3	3290605	2	Nut, Tinnerman M6	
4	1001182806	1	Alarm	
4	4460897	1	Receptacle, Female - 2 Position	
4	4460464	2	Pin, Male	

https://truckmanualshub.com/

FIGURE 1-22. LADDER INSTALLATION

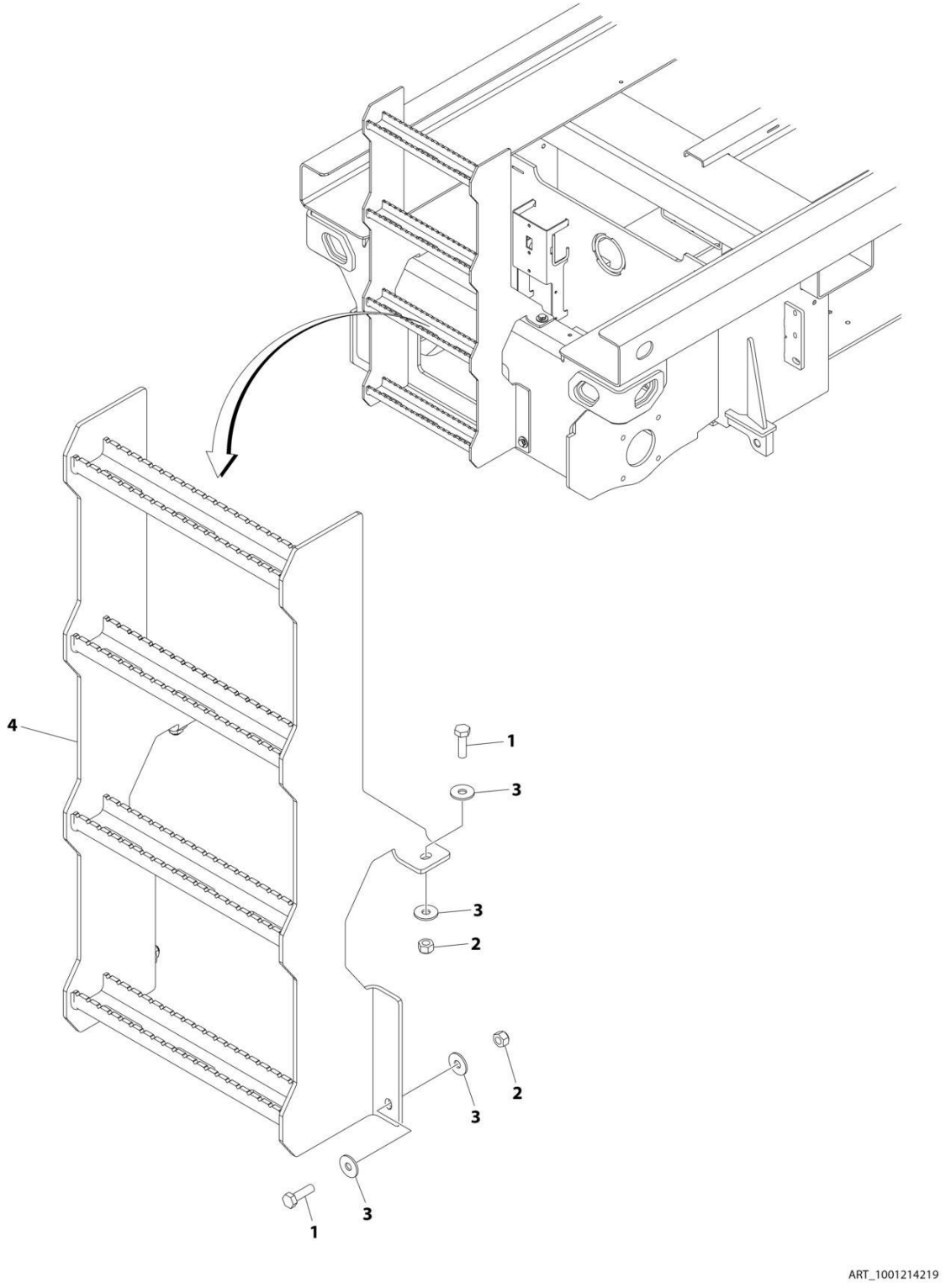

https://truckmanualshub.com/

FIGURE 1-22. LADDER INSTALLATION

ITEM	PART NUMBER	QTY	DESCRIPTION	REV
	1001214219	Ref	LADDER INSTALLATION	A
1	0761015	4	Bolt M10 x 35	
2	3291005	4	Nut M10	
3	4812002	8	Washer M10	
4	1001217216	1	Ladder	

https://truckmanualshub.com/

https://truckmanualshub.com/

SECTION 2 - GROUND CONTROLS

https://truckmanualshub.com/

FIGURE 2-1. HYDRAULIC COMPONENTS INSTALLATION

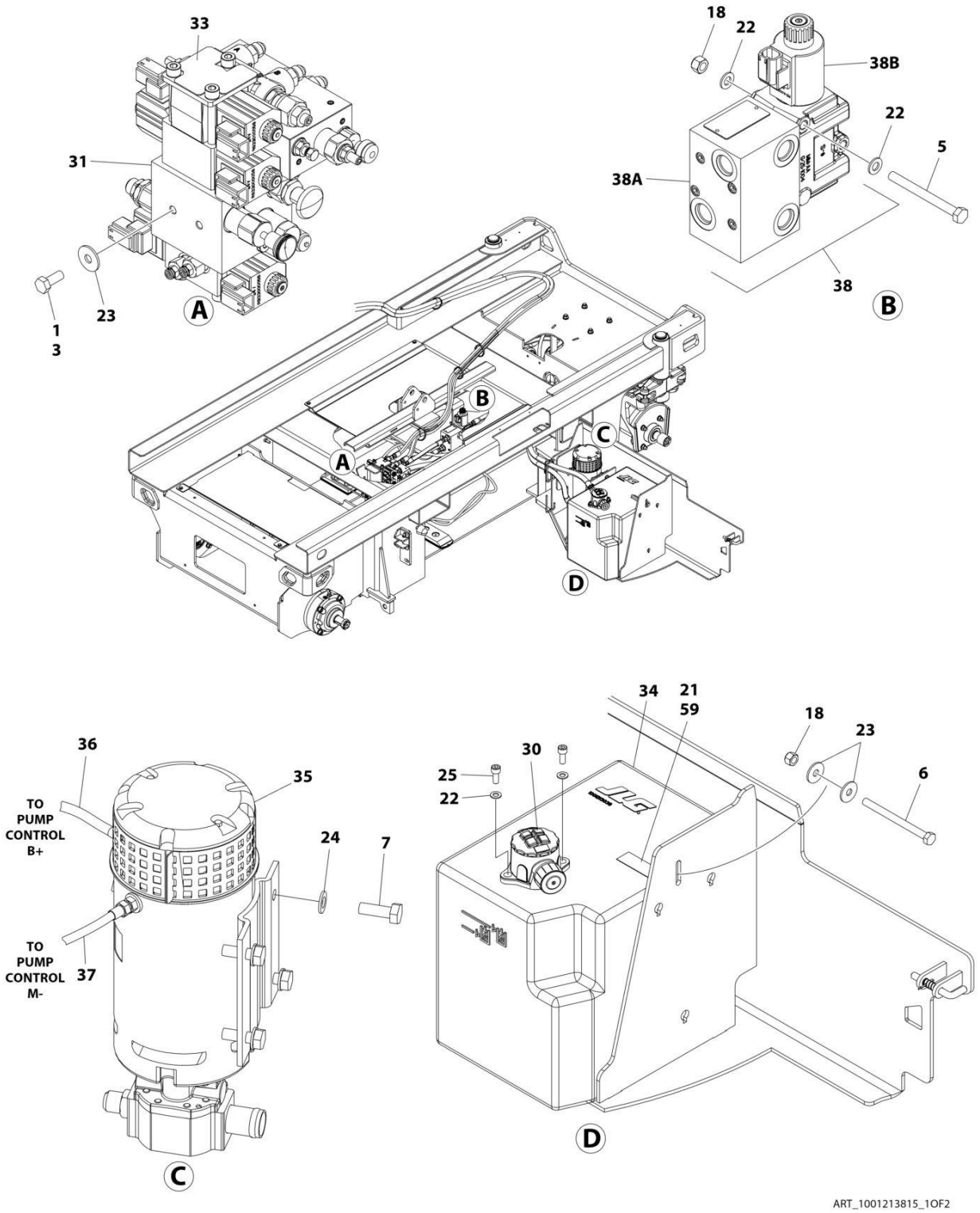

https://truckmanualshub.com/

FIGURE 2-1. HYDRAULIC COMPONENTS INSTALLATION

ITEM	PART NUMBER	QTY	DESCRIPTION	REV
	1001213815	Ref	HYDRAULIC COMPONENTS INSTALLATION	J
1	0100011	AR	Compound, Locking	
3	0760810	2	Bolt M8 x 20	
5	0700825	2	Bolt M8 x 85	
6	0760827	1	Bolt M8 x 100 **(Prior to SN B200046105, Prior to SN 0200267008)**	
6	0760812	1	Bolt M8 x 25 **(SN B200046105 to Present, SN 0200267008 to Present)**	
7	0761014	4	Bolt M10 x 30	
18	3290805	AR	Nut M8	
21	4420062	3 in/ 75mm	Tape	
22	4811900	AR	Washer M8	
23	4811902	4	Washer M8	
24	4812000	4	Washer M10	
25	5271808	2	Capscrew M8 x 20	
30	1001202851	1	Filter, Hydraulic	
30	70005423	1	Service Kit (Includes Element & Cap & Bowl O-Rings)	
31	1001215433	1	Main Valve Assembly (See Separate Breakdown in this Section)	
33	1001212294	1	Decal - Manifold	
34	1001213036	1	Tank, Hydaulic	
35	1001213875	1	Motor/Pump Assembly	
35	70006351	1	Motor, Replacement	
35	70006352	1	Pump, Replacement	
35	70005816	1	Pump Seal & Mounting Kit (Includes Shaft Seal, Retaining Ring, Gasket, Bolts & Washers)	
36	1001214875	1	Cable, Pump (+)	
37	1001214876	1	Cable, Pump (-)	
38	1001215434	1	Traction Valve Assembly	
38	70006295	4	Screw	
38A	70004465	1	Valve, Flow Divider	
38A	70004164	1	Seal Kit - 70004465 Valve	
38B	70006296	1	Valve, Diverter	
38B	70006297	1	Coil	
38B	70006298	1	Seal, Interface	
38B	70006299	1	Coil Seal & Nut Kit	
59	1001231841	1	Bracket, Hydraulic Tank **(SN B200046105 to Present, SN 0200267008 to Present)**	

https://truckmanualshub.com/

FIGURE 2-2. VALVE ASSEMBLY

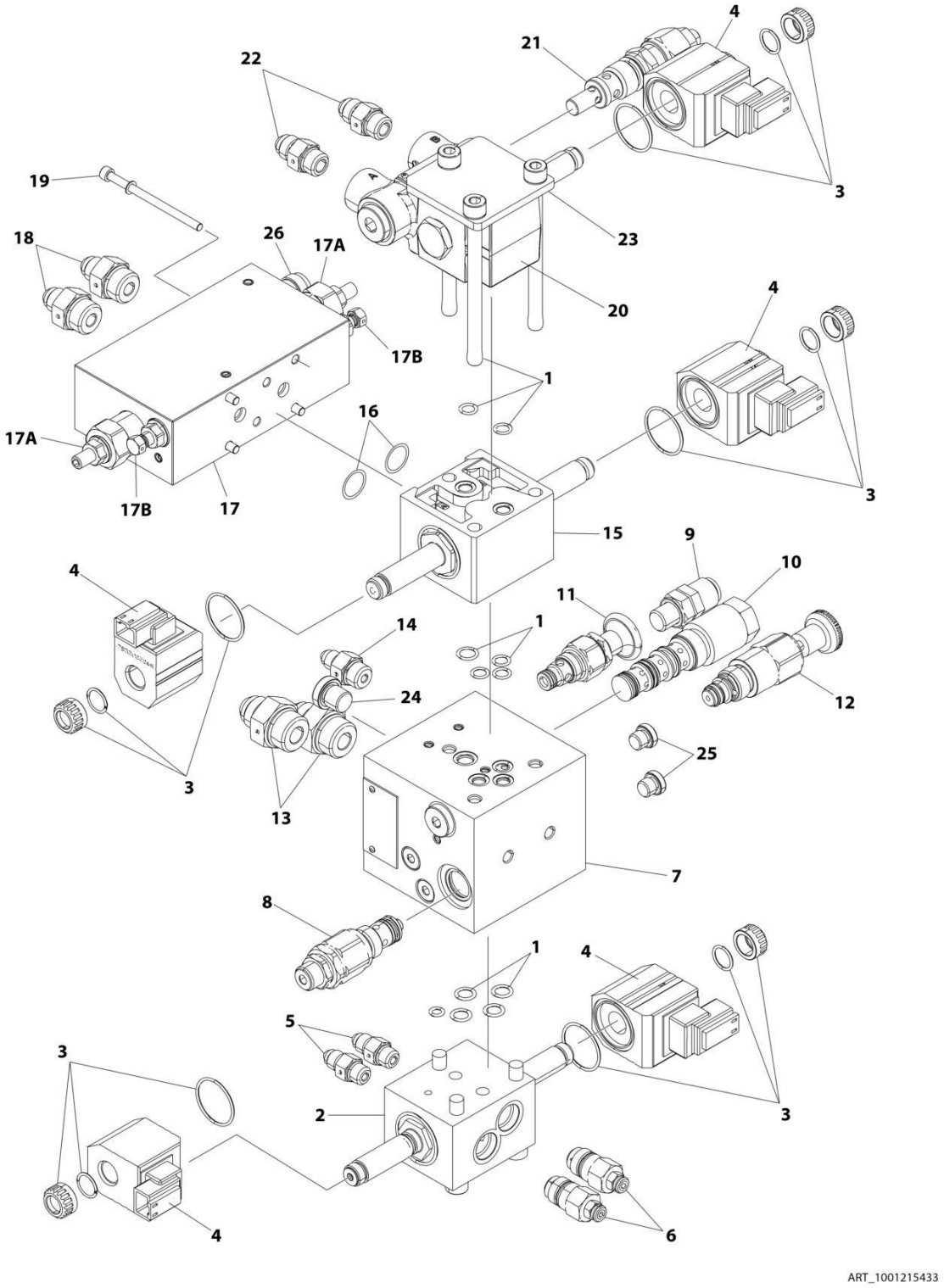

https://truckmanualshub.com/

FIGURE 2-2. VALVE ASSEMBLY

ITEM	PART NUMBER	QTY	DESCRIPTION	REV
	1001215433	Ref	VALVE ASSEMBLY	B
1	70005891	1	Assembly Kit (Includes Assembly Hardware and Seals Between Valve Blocks)	
2	70006302	1	Valve Assembly Less Coil (Steer)	
3	70021209	5	Coil Retainer Kit	
4	70005893	5	Coil	
5	2220415	2	Fitting, Straight	
6	70006301	3	Valve, Cartridge (Steer)	
7	See Note	NSS	Block, Valve (Entry Valve) (Note: Use p/n 1001215433)	
8	70005896	1	Valve, Cartridge	
9	2221086	1	Fitting, Hydraulic Test	
10	70005898	1	Valve, Cartridge	
11	70005899	1	Valve, Cartridge	
12	70005900	1	Valve, Cartridge	
13	2220374	2	Fitting, Straight JIC/ORB	
14	2220582	1	Fitting, Straight JIC/ORB	
15	70005903	1	Valve Assembly Less Coil (Lower Drive Valve)	
16	70005904	1	Seal Kit	
17	70006300	1	Valve Assembly (Upper Drive Valve)	
17A	See Note	NSS	Valve, Cartridge (Note: Use p/n 70006300)	
17B	See Note	NSS	Valve, Cartridge (Note: Use p/n 70006300)	
18	2220372	2	Fitting, Straight JIC/ORB	
19	70005907	1	Hardware Kit - Valve Mounting	
20	70005908	1	Valve Assembly Less Coil (Lift)	
21	70005909	1	Valve, Cartridge	
22	2220371	2	Fitting, Straight JIC/ORB	
23	70005911	1	Plate, End	
24	70005912	1	Plug	
25	70005913	2	Plug	
26	70005914	1	Valve, Cartridge	

https://truckmanualshub.com/

FIGURE 2-3. ELECTRICAL COMPONENTS INSTALLATION (CHINA BUILT MACHINES)

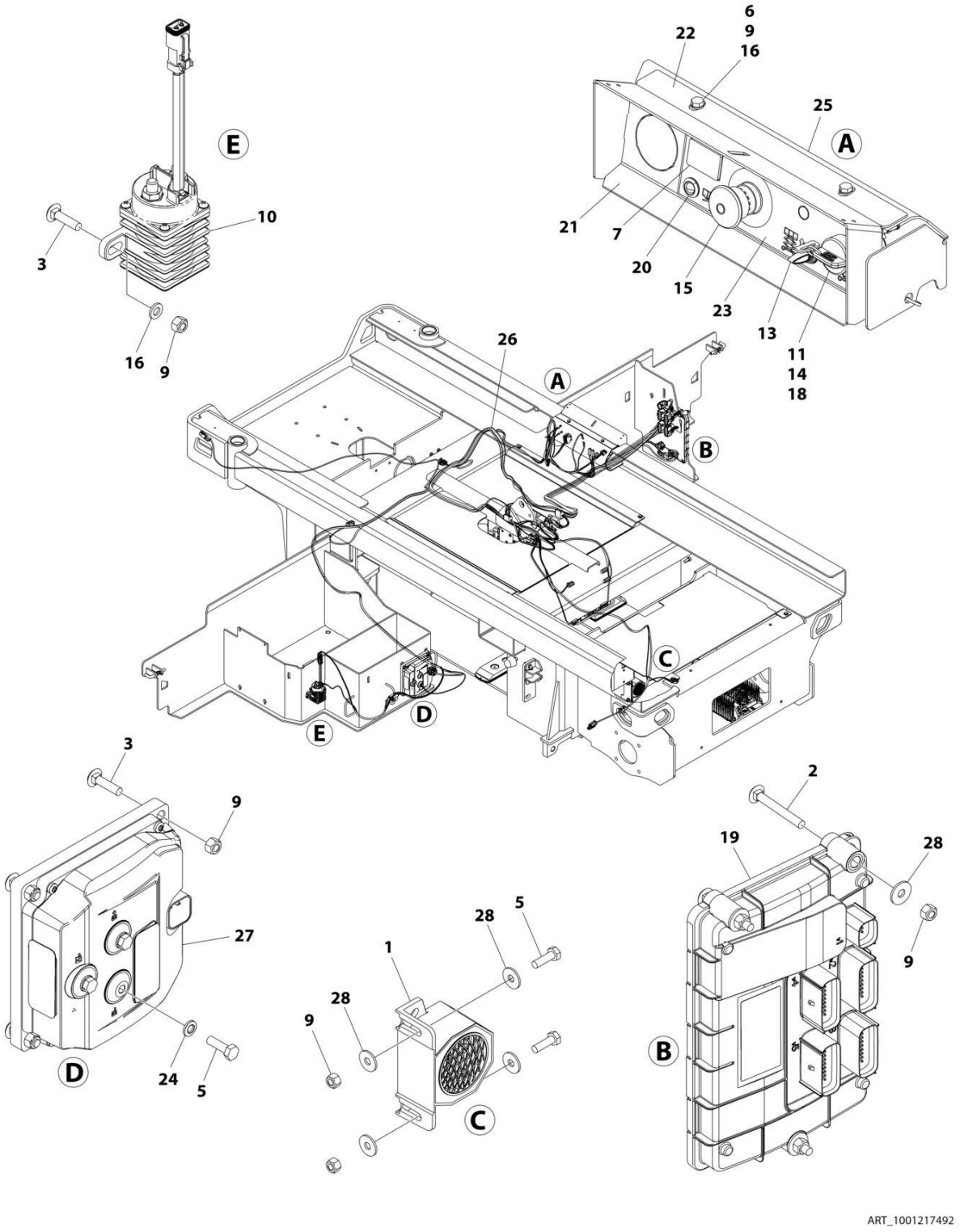

https://truckmanualshub.com/

FIGURE 2-3. ELECTRICAL COMPONENTS INSTALLATION (CHINA BUILT MACHINES)

ITEM	PART NUMBER	QTY	DESCRIPTION	REV
	1001217492	Ref	ELECTRICAL COMPONENTS INSTALLATION (CHINA BUILT MACHINES)	D
1	0140043	1	Alarm	
2	0630586	3	Bolt M6 x 50	
3	0630587	4	Bolt M6 x 25	
5	0760610	AR	Bolt M6 x 20	
6	0760612	2	Bolt M6 x 25	
7	2420172	1	Hourmeter	
9	3290605	AR	Nut M6	
10	3740150	1	Relay	
11	3910804	3	Screw #8 x 1/4	
12	4240017	AR	Tie-Strap (Not Shown)	
13	4360328	1	Switch, Toggle	
14	4360469	1	Switch, Key	
14	2860030	1 Set	Key, Replacement	
15	4360475	1	Switch, Emergency Stop	
15	7020175	1	Cap	
15	7020176	1	Block, Contact	
16	4811700	6	Washer M6 **(Prior to SN B200045699)**	
18	1001130590	1	Plate, Key Switch	
19	1001200629	1	Module, Control (Note: Recalibration Required when Replaced)	
20	1001200631	1	Light, Indicator (Red)	
21	1001207214	1	Support	
22	1001207215	1	Bracket	
23	1001209682	1	Decal - Ground Control	
24	1001210966	3	Washer	
25	1001214088	1	Cover, Rubber **(Prior to SN B200045699)**	
25	1001231264	1	Bracket, Ground Control Back **(SN B200045699 to Present)**	
26	1001214596	1	Chassis Harness (See Separate Breakdown in ELECTRICAL SECTION)	
27	1001216062	1	Module, Power (Note: Recalibration Required when Replaced)	
28	4811702	AR	Washer M6	

https://truckmanualshub.com/

FIGURE 2-4. ELECTRICAL COMPONENTS INSTALLATION (MEXICO BUILT MACHINES)

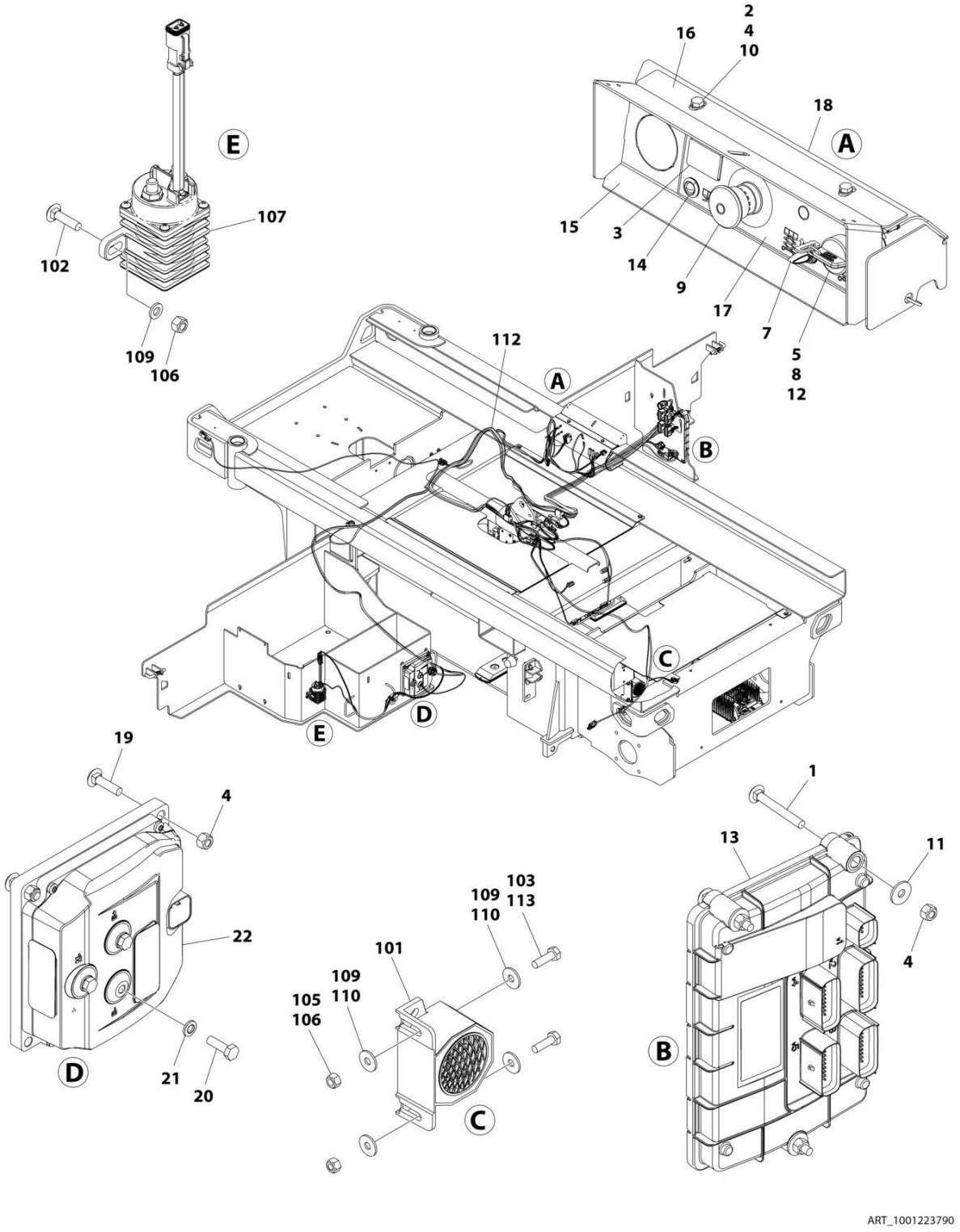

https://truckmanualshub.com/

FIGURE 2-4. ELECTRICAL COMPONENTS INSTALLATION (MEXICO BUILT MACHINES)

ITEM	PART NUMBER	QTY	DESCRIPTION	REV
		Ref	ELECTRICAL COMPONENTS INSTALLATION (MEXICO BUILT MACHINES)	
	1001223790	Ref	GOUND CONTROL AND MODULE INSTALLATION	D
1	0630586	3	Bolt M6 x 50	
2	0760612	2	Bolt M6 x 25	
3	2420172	1	Hourmeter	
4	3290605	AR	Nut M6	
5	3910804	3	Screw #8 x 1/4	
6	4240017	AR	Tie-Strap (Not Shown)	
7	4360328	1	Switch, Toggle	
8	4360469	1	Switch, Key	
8	2860030	1 Set	Key, Replacement	
9	4360475	1	Switch, Emergency Stop	
9	7020175	1	Cap	
9	7020176	1	Block, Contact	
10	4811700	4	Washer M6 **(Prior to SN 0200266823)**	
11	4811702	AR	Washer M6	
12	1001130590	1	Plate. Key Switch	
13	1001200629	1	Module, Control (Note: Recalibration Required when Replaced)	
14	1001200631	1	Light, Indicator (Red)	
15	1001207214	1	Support	
16	1001207215	1	Bracket	
17	1001209682	1	Decal - Ground Control	
18	1001214088	1	Cover, Rubber **(Prior to SN 0200266823)**	
18	1001231264	1	Bracket, Ground Control Back **(SN 0200266823 to Present)**	
19	0630587	2	Bolt M6 x 25	
20	0760610	3	Bolt M6 x 20	
21	1001210966	3	Washer	
22	1001216062	1	Control, Power (Note: Recalibration Required when Replaced)	
	1001223446	Ref	ALARM, RELAY AND POWER MODULE INSTALLATION	C
101	0140043	1	Alarm	
102	0630587	2	Bolt M6 x 25	
103	0700408	AR	Bolt M4 x 16	
105	3290405	AR	Nut M4	
106	3290605	AR	Nut M6	
107	3740150	1	Relay	
108	4240017	AR	Tie-Strap (Not Shown)	
109	4811702	AR	Washer M6	
110	1001091102	AR	Washer M4	
112	1001214596	1	Chassis Harness (See Separate Breakdown in ELECTRICAL SECTION)	
113	0760610	AR	Bolt M6 x 20	

https://truckmanualshub.com/

FIGURE 2-5. MDI INSTALLATION

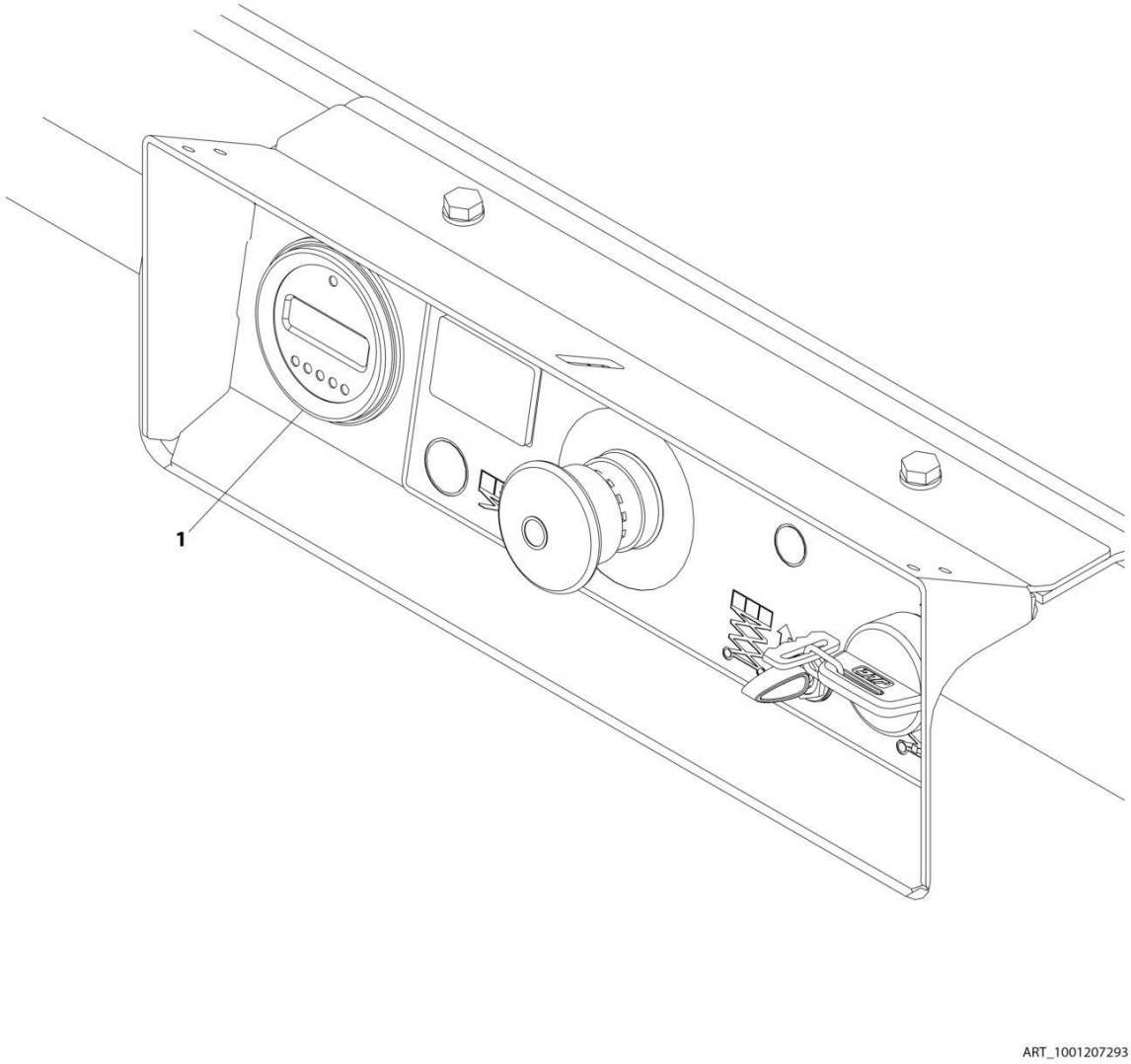

https://truckmanualshub.com/

FIGURE 2-5. MDI INSTALLATION

ITEM	PART NUMBER	QTY	DESCRIPTION	REV
	1001207293	Ref	MDI INSTALLATION	B
1	1001200632	1	Gauge, MDI	

https://truckmanualshub.com/

FIGURE 2-6. BATTERIES INSTALLATION - STANDARD 12V-150AH

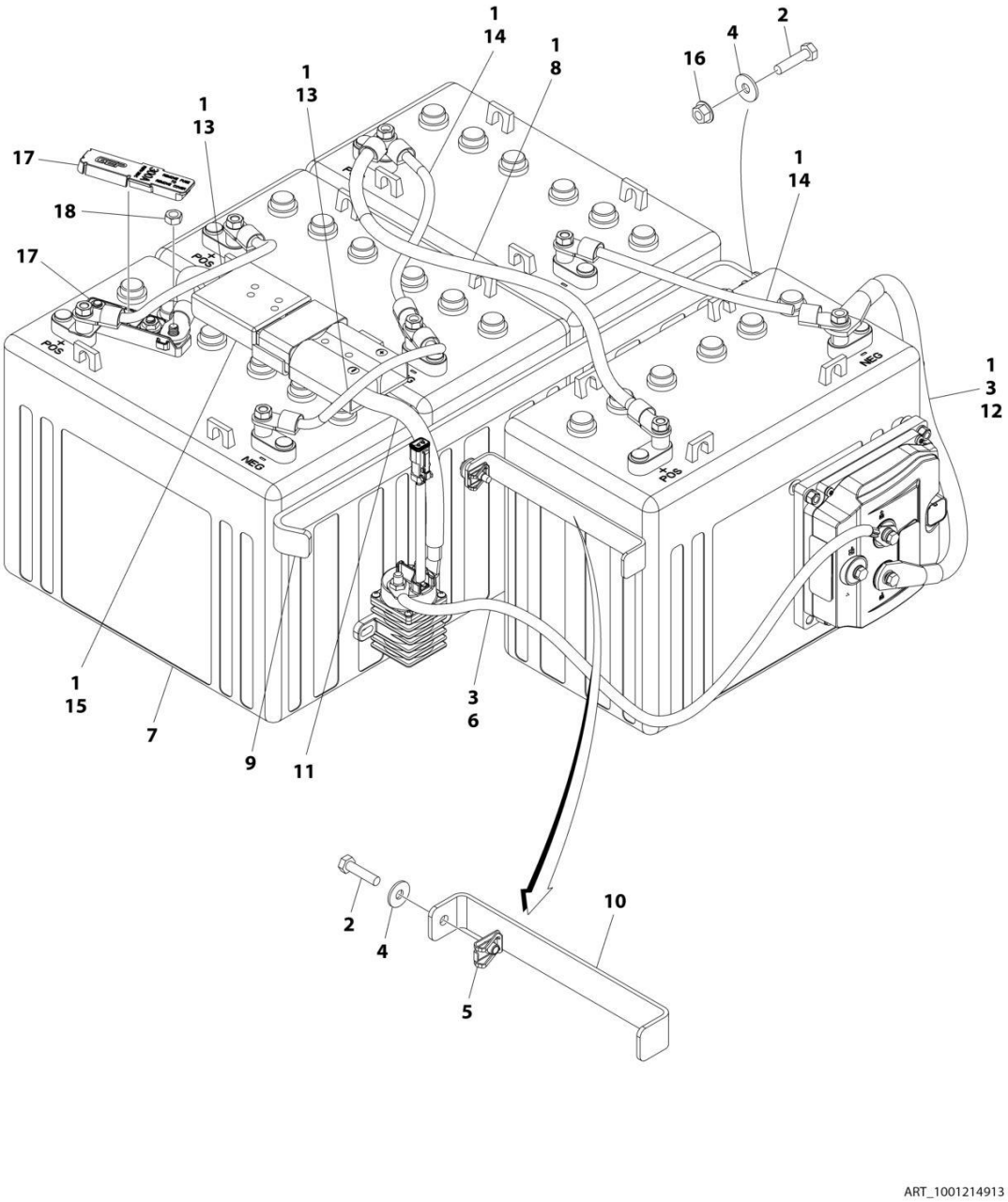

https://truckmanualshub.com/

FIGURE 2-6. BATTERIES INSTALLATION - STANDARD 12V-150AH

ITEM	PART NUMBER	QTY	DESCRIPTION	REV
	1001214913	Ref	BATTERIES INSTALLATION - STANDARD 12V-150AH	D
1	0100051	AR	Grease, Terminal	
2	0760612	2	Bolt M6 x 25	
3	4240017	AR	Tie-Strap	
4	4811702	2	Washer M6	
5	8305919	1	Nut, Retainer, M6	
6	1001214877	1	Cable, Contactor to Pump Control B+ **(Prior to SN B200040799, Prior to SN 0200266700)**	
7	1001214981	4	Battery	
8	1001216411	1	Cable, Battery (+ to -)	
9	1001220904	1	Bracket	
10	1001220905	1	Bracket	
11	1001214878	1	Cable, Contactor to Battery Disconnect	
11	4460290	1	Connector, Anderson	
12	1001214879	1	Cable, Battery to Pump Control B-	
13	1001216409	2	Cable	
14	1001216410	2	Cable	
15	1001216417	1	Cable, Battery Disconnect +	
15	2400087	1	Fuse - 300Amp	
16	5260600	1	Nut, M6 Class 10	
17	1001229522	1	Holder, Mega Fuse 300A **(SN B200040799 to Present, SN 0200266700 to Present)**	
18	3290801	1	Nut M8 **(SN B200040799 to Present, SN 0200266700 to Present)**	

https://truckmanualshub.com/

FIGURE 2-7. BATTERIES INSTALLATION - STANDARD 12V-185AH

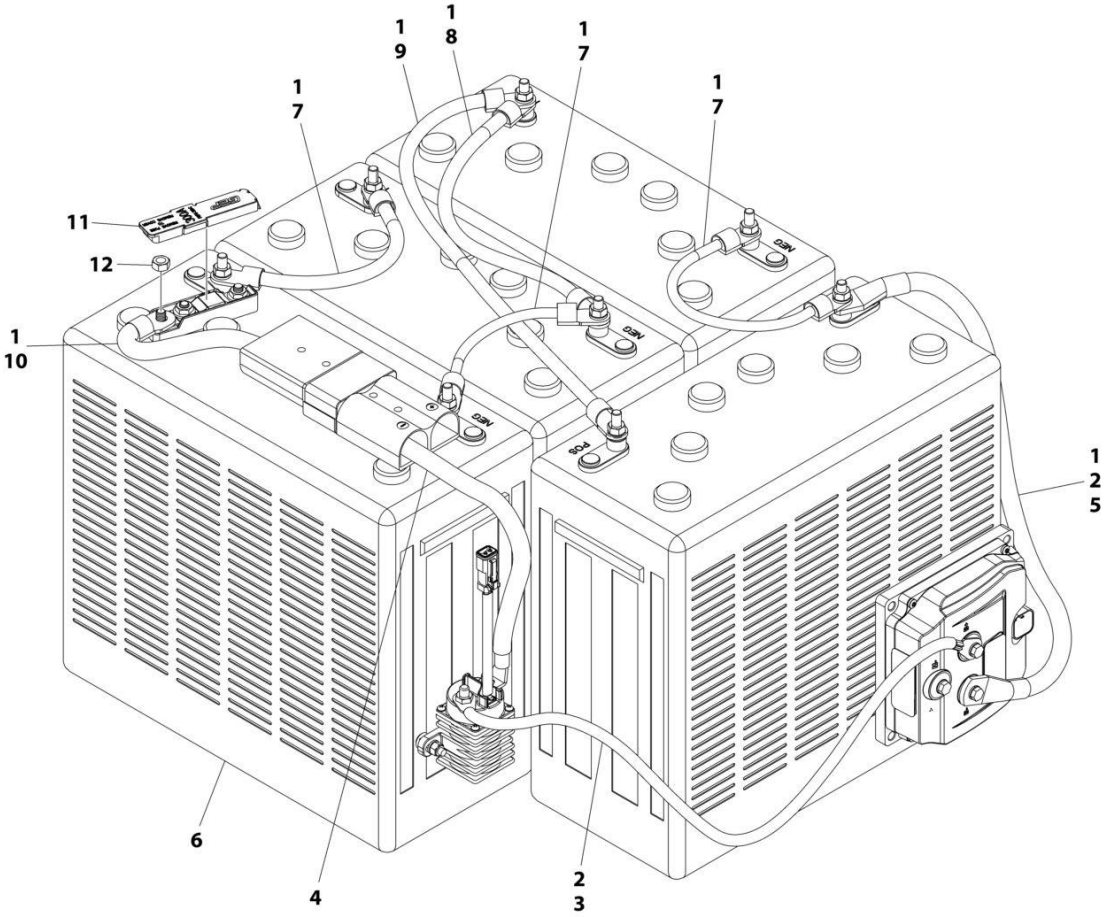

https://truckmanualshub.com/

FIGURE 2-7. BATTERIES INSTALLATION - STANDARD 12V-185AH

ITEM	PART NUMBER	QTY	DESCRIPTION	REV
	1001214915	Ref	BATTERIES INSTALLATION - STANDARD 12V-185AH	D
1	0100051	AR	Grease, Terminal	
2	4240017	AR	Tie-Strap	
3	1001214877	1	Cable, Contactor to Pump Control B+ **(Prior to SN B200040799, Prior to SN 0200266700)**	
4	1001214878	1	Cable, Contactor to Battery Disconnect	
4	4460290	1	Connector, Anderson	
5	1001214879	1	Cable, Battery - to Pump Control B-	
6	1001214980	4	Battery	
7	1001216409	3	Cable, Battery	
8	1001216410	1	Cable, Battery (+ to -)	
9	1001216411	1	Cable, Battery (+ to +)	
10	1001216417	1	Cable, Battery Disconnect to Fuse	
10	4460290	1	Connector, Anderson	
10	2400087	1	Fuse - 300Amp	
11	1001229522	1	Holder, Mega Fuse 300A **(SN B200040799 to Present, SN 0200266700 to Present)**	
12	3290801	1	Nut M8 **(SN B200040799 to Present, SN 0200266700 to Present)**	

https://truckmanualshub.com/

FIGURE 2-8. BATTERIES INSTALLATION - AGM 12V-150AH

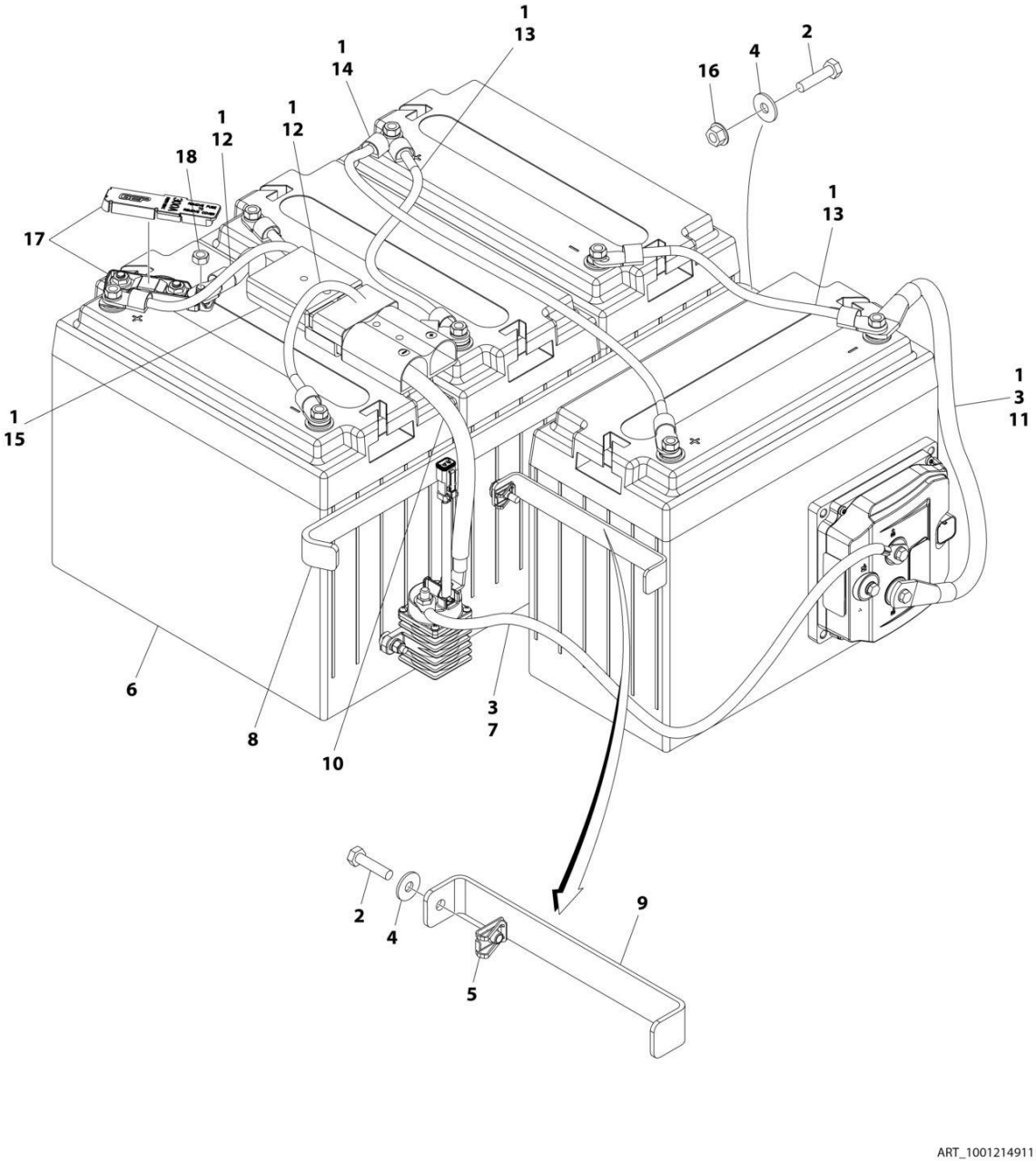

https://truckmanualshub.com/

FIGURE 2-8. BATTERIES INSTALLATION - AGM 12V-150AH

ITEM	PART NUMBER	QTY	DESCRIPTION	REV
	1001214911	Ref	BATTERIES INSTALLATION - AGM 12V-150AH	D
1	0100051	AR	Grease, Terminal	
2	0760612	2	Bolt M6 x 25	
3	4240017	AR	Tie-Strap	
4	4811702	2	Washer M6	
5	8305919	1	Nut, Retainer, M6	
6	1001214309	4	Battery	
7	1001214877	1	Cable, Contactor to Pump Control B+ **(Prior to SN B200040799, Prior to SN 0200266700)**	
8	1001220904	1	Bracket	
9	1001220905	1	Bracket	
10	1001214878	1	Cable, Contactor to Battery Disconnect	
10	4460290	1	Connector, Anderson	
11	1001214879	1	Cable, Battery to Pump Control B-	
12	1001216409	2	Cable, Battery	
13	1001216410	2	Cable, Battery	
14	1001216411	1	Cable, Battery (+ to +)	
15	1001216417	1	Cable, Battery Disconnect +	
15	2400087	1	Fuse - 300Amp	
16	5260600	1	Nut, M6 Class 10	
17	1001229522	1	Holder, Mega Fuse 300A **(SN B200040799 to Present, SN 0200266700 to Present)**	
18	3290801	1	Nut M8 **(SN B200040799 to Present, SN 0200266700 to Present)**	

https://truckmanualshub.com/

FIGURE 2-9. INVERTER INSTALLATION (OPTIONAL)

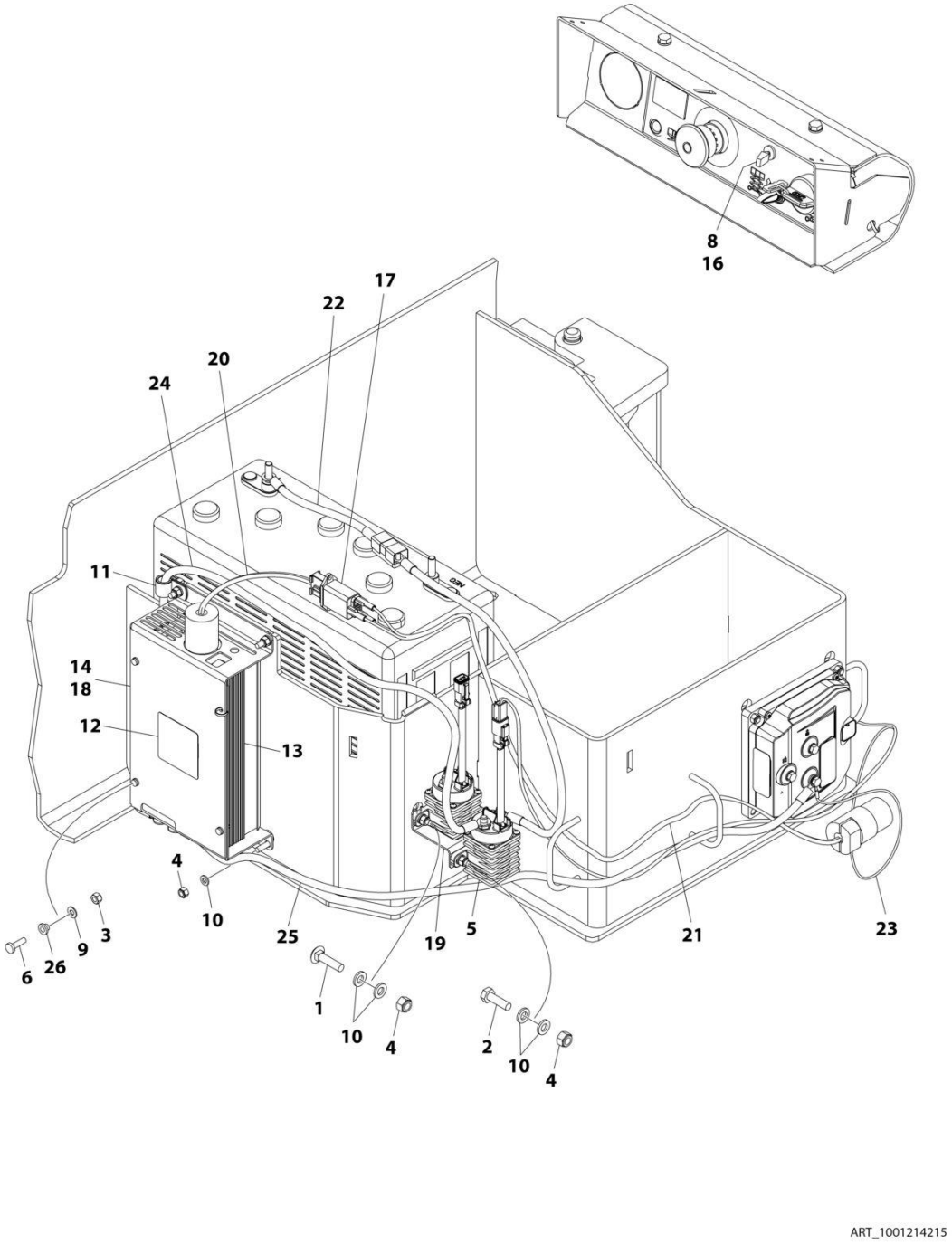

https://truckmanualshub.com/

FIGURE 2-9. INVERTER INSTALLATION (OPTIONAL)

ITEM	PART NUMBER	QTY	DESCRIPTION	REV
	1001214215	Ref	INVERTER INSTALLATION (OPTIONAL)	B
1	0630587	6	Bolt M6 x 25	
2	0760610	2	Bolt M6 x 20	
3	3290405	3	Nut M4	
4	3290605	8	Nut M6	
5	3740150	1	Relay	
6	1001101540	3	Screw M4 x 14	
7	4240017	AR	Tie-Strap (Not Shown)	
8	4360336	1	Switch, Toggle	
9	4811400	3	Washer M4	
10	4811700	8	Washer M6	
11	85941016	1	Clamp	
12	1001125483	1	Decal - Pressure Wash	
13	1001136757	1	Inverter	
14	1001142173	1	Insulate	
15	1001143009	1	Decal - Inverter (Not Shown - Located on LH side of Frame)	
16	1001143010	1	Decal - On/Off Inverter	
17	1001157547	1	Inverter	
18	1001210440	1	Support	
19	1001210605	1	Support	
20	1001210881	1	Cable, Inverter to AC Filter	
20	4460138	1	Plug, Male - 3 Prong	
20	1001157513	1	Plug, Male - 3 Position	
20	1001157790	3	Terminal	
21	1001210882	1	Cable AC Filter to AC Plug	
21	4460779	1	Receptacle, Female	
22	1001214880	1	Cable, Battery + to Relay	
23	1001214994	1	Harness, Inverter (See Separate Breakdown in ELECTRICAL SECTION)	
24	1001215215	1	Cable, Inverter + to Relay	
25	1001217445	1	Cable, Pump Control B- to Inverter -	
26	1001142174	3	Washer 1/8	

https://truckmanualshub.com/

FIGURE 2-10. DOORS INSTALLATION

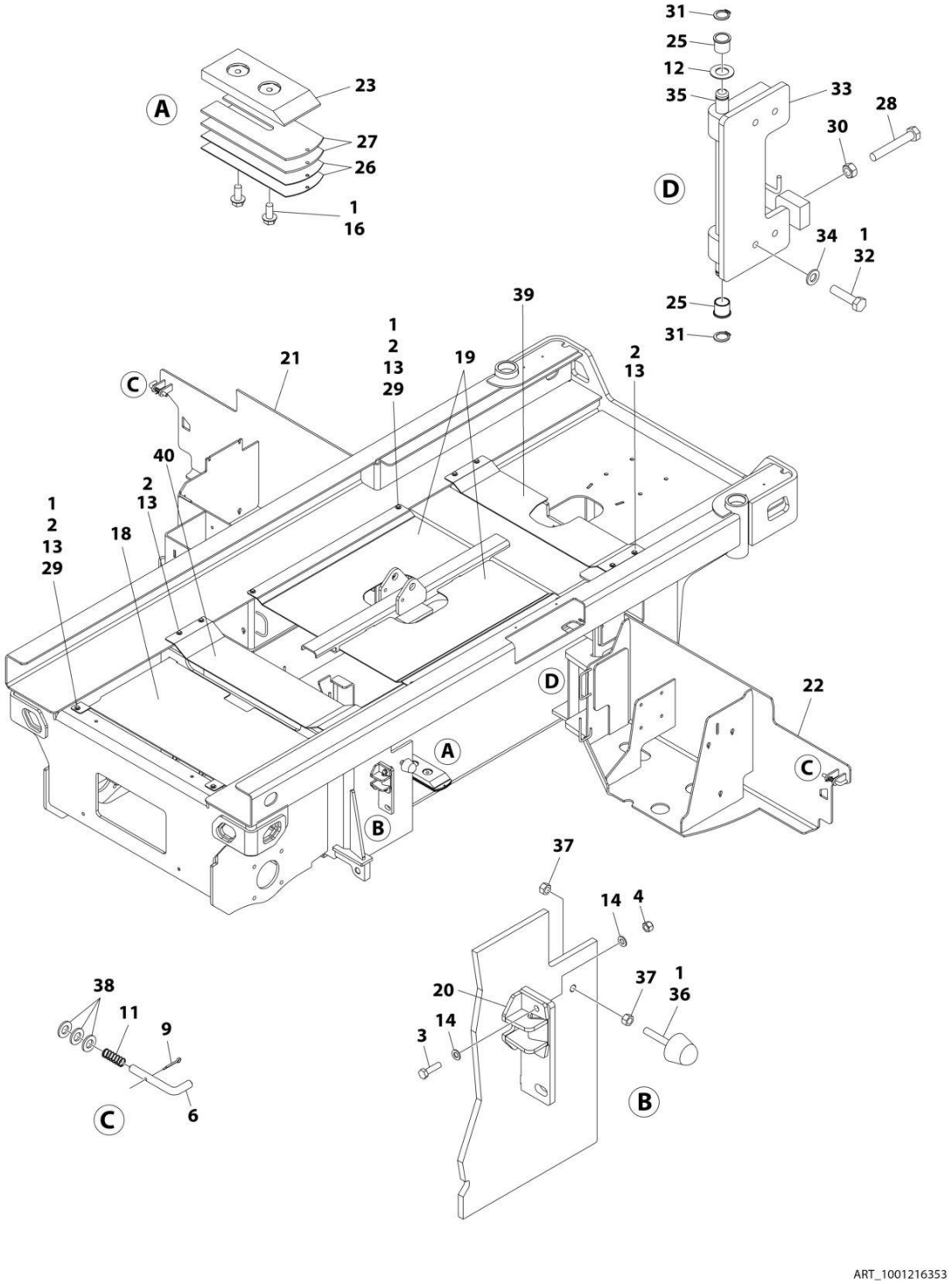

https://truckmanualshub.com/

FIGURE 2-10. DOORS INSTALLATION

ITEM	PART NUMBER	QTY	DESCRIPTION	REV
	1001216353	Ref	DOORS INSTALLATION	F
1	0100011	AR	Compound, Locking	
2	0700612	AR	Bolt M6 x 25	
3	0700814	AR	Bolt M8 x 30	
3	0700817	AR	Bolt M8 x 45	
4	3290805	4	Nut M8	
6	3423243	2	Pin, Latch	
9	3450303	2	Pin	
11	4160214	2	Spring	
12	4740086	2	Washer	
13	4811702	AR	Washer M6	
14	4811902	AR	Washer M8	
16	5251011	4	Bolt M10 x 22	
18	1001217458	1	Cover	
19	1001217464	2	Panel	
20	1001217916	2	Bracket **(Prior to SN B200045402)**	
20	1001214810	2	Bracket **(SN B200045402 to Present)**	
21	1001218048	1	Door, Battery	
22	1001218181	1	Door, Hydraulic	
23	1001218563	2	Pad, Wear	
25	1001218573	4	Bearing	
26	1001219828	4	Shim 18GA	
27	1001219829	4	Shim, Wear Pad 11GA	
28	0761224	2	Bolt M12 x 80	
29	3290605	AR	Nut M6	
30	3291201	2	Nut M12	
31	3760348	4	Ring, Retaining	
32	0761218001	8	Bolt M12 x 50	
33	1001223073	2	Hinge	
34	4812100001	8	Washer M12	
35	1001223171	2	Pin	
36	0940071	2	Bumper	
37	3271601	4	Nut 3/8	
38	4812000	AR	Washer M10	
39	1001234257	1	Panel **(SN B200045793 to Present)**	
40	1001234301	1	Panel **(SN B200045793 to Present)**	

https://truckmanualshub.com/

https://truckmanualshub.com/

SECTION 3 - SCISSORS ARMS

https://truckmanualshub.com/

SECTION 3 - SCISSORS ARMS

FIGURE 3-1. SCISSORS ARMS INSTALLATION

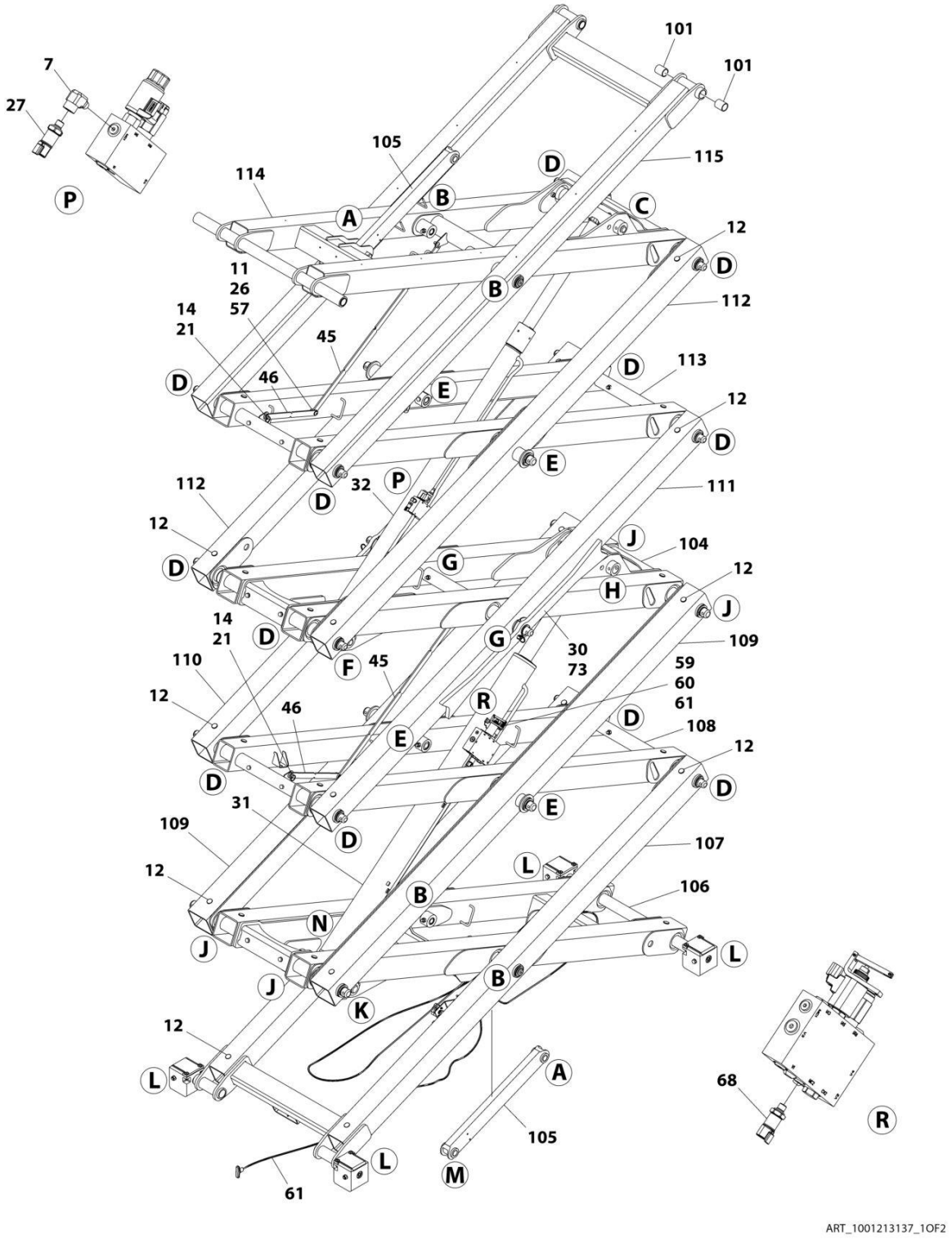

https://truckmanualshub.com/

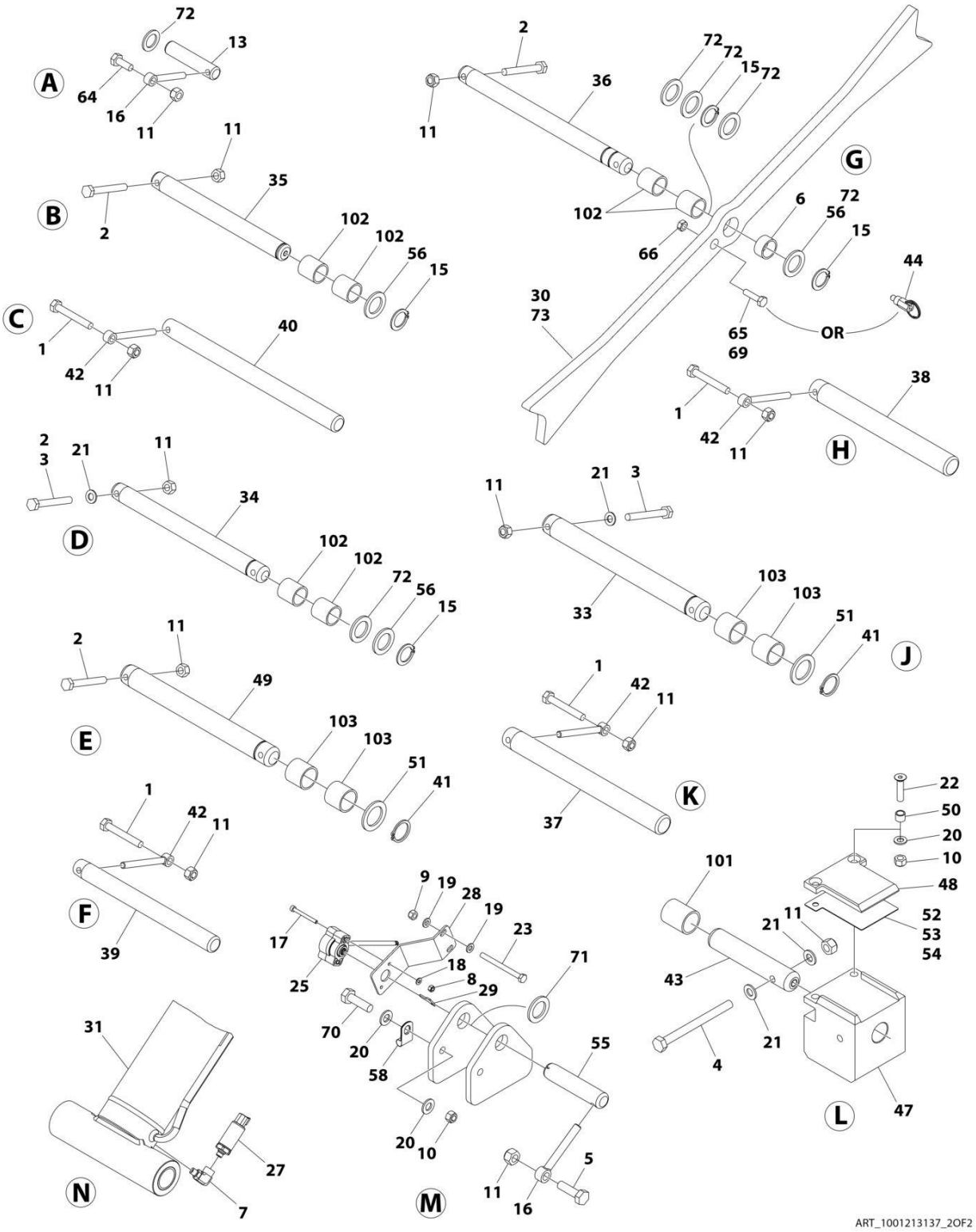

https://truckmanualshub.com/

FIGURE 3-1. SCISSORS ARMS INSTALLATION

ITEM	PART NUMBER	QTY	DESCRIPTION	REV
	1001213137	Ref	SCISSORS ARMS INSTALLATION	M
1	0701022	4	Bolt M10 x 70	
2	0701024	18	Bolt M10 x 80	
3	0701025	8	Bolt M10 x 85	
4	0701029	AR	Bolt M10 x 120	
4	0701030	AR	Bolt M10 x 130	
5	0701015	1	Bolt M10 x 35	
6	0962257	2	Bushing **(Prior to SN B200040518, Prior to SN 0200266894)**	
6	1001227919	2	Bushing **(SN B200040518 through B200041089, SN 0200266894 through 0200266704)**	
7	2221116	AR	Fitting, 90 ORB/ORB	
8	3290405	2	Nut M4	
9	3290605	2	Nut M6	
10	3290805	9	Nut M8	
11	3291005	39	Nut M10	
12	3340962	36	Pad **(Prior to SN B200040518, Prior to SN 0200266894)**	
12	1001228533	36	Pad **(SN B200040518 to Present, SN 0200266894 to Present)**	
13	3422943	2	Pin	
14	3760170	4	Ring, Split	
15	3760387	AR	Ring, Retaining	
16	3841143	3	Keeper, Pin	
17	4031512	2	Capscrew M4 x 40	
18	4811400	2	Washer M4	
19	4811700	4	Washer M6	
20	4811900	10	Washer M8	
21	4812000	AR	Washer M10	
22	1001094312	8	Screw M8 x 30	
23	1001096653	2	Bolt M6 x 70	
25	1001146963	1	Sensor, BEI Angle	
25	4460899	1	Receptacle, Female - 6 Position	
25	4460464	6	Pin, Male	
26	1001153195	6	Washer M10	
27	1001200740	2	Transducer, Pressure **(Prior to SN B200040518, Prior to SN 0200266894)**	
27	1001227516	2	Transducer, Pressure **(SN B200040518 to Present, SN 0200266894 to Present)**	
28	1001222308	1	Bracket	
29	1001205345	1	Key, Sensor **(Prior to SN 0200267399, Prior to SN B200046828)**	
29	1001234204	1	Key, Sensor **(SN 0200267399 to Present, SN B200046828 to Present)**	
30	1001212284	2	Prop, Safety **(Prior to SN B200045460, Prior to SN 0200266894)**	
31	1001212482	1	Lift Cylinder Assembly - Lower (See Separate Breakdown in CYLINDER SECTION)	
32	1001212483	1	Lift Cylinder Assembly - Upper (See Separate Breakdown in CYLINDER SECTION)	
33	1001214625	4	Pin	
34	1001214641	12	Pin	
35	1001214644	4	Pin	
36	1001214645	2	Pin **(Prior to SN 0200266928)**	
36	1001231837	2	Pin **(SN 0200266928 to Present)**	
36	1001214645	2	Pin **(Prior to SN B200046782)**	

https://truckmanualshub.com/

ITEM	PART NUMBER	QTY	DESCRIPTION	REV
36	1001231837	2	Pin **(SN B200046782 to Present)**	
37	1001214646	1	Pin	
38	1001214648	1	Pin	
39	1001214649	1	Pin	
40	1001214650	1	Pin	
41	1001214689	8	Ring, Reatining	
42	1001214907	4	Keeper, Pin	
43	1001215790	4	Pin	
44	3423151	2	Pin, Plunger **(Prior to SN B200040518, Prior to SN 0200266894)**	
45	1001216690	2	Support, Cable	
46	1001216691	2	Support, Cable	
47	1001216781	4	Block, Slide	
48	1001216792	4	Pad, Slide	
49	1001216808	4	Pin	
50	1001217110	8	Sleeve	
51	1001217457	8	Washer	
52	1001217466	AR	Shim, 20 Gauge	
53	1001219834	AR	Shim, 15 Gauge	
54	1001219835	AR	Shim, 24 Gauge	
55	1001220144	1	Pin, Sensor	
56	1001220407	AR	Washer	
57	1001174673	2	Screw M10 x 30	
58	8406003	1	Clamp	
59	3321402	1	Nut 1/4	
60	4160078	1	Spring	
61	1001218696	1	Cable, Manual Descent	
61	7020218	1	Handle	
62	1001216594	1	Lift Down Harness - Lower (Not Shown) (See Separate Breakdown in ELECTRICAL SECTION)	
63	1001216595	1	Lift Down Harness - Upper (Not Shown) (See Separate Breakdown in ELECTRICAL SECTION)	
64	0701014	2	Bolt M10 x 30	
65	0701016	2	Bolt M10 x 40	
66	3291001	2	Nut M10	
67	1001216593	1	LSS Harness (Not Shown - See Separate Breakdown in ELECTRICAL SECTION)	
68	1001225164	1	Sensor, Pressure Transducer	
69	0100011	AR	Compound, Locking	
70	0700814	1	Bolt M8 x 30	
71	4740446	AR	Washer **(Prior to SN 0200266928, Prior to SN B200046782)**	
72	1001231270	AR	Shim	
73	1001231890	2	Assembly, Safety Prop **(SN B200045460 to Present)**	
73	1001212284	1	Plate, Safety Prop	
73	1001227919	1	Bearing, Bronze	
	1001219766	Ref	ARM KIT	
101	0440266	8	Bearing	
102	0440267	36	Bearing	
103	0962272	16	Bearing	
104	1001211677	1	Arm - Inner 3	
105	1001211951	2	Link	
105	0962474	4	Bushing	
106	1001212768	1	Arm - Inner 1	

https://truckmanualshub.com/

SECTION 3 - SCISSORS ARMS

ITEM	PART NUMBER	QTY	DESCRIPTION	REV
107	1001212795	1	Arm - Outer 1	
108	1001212829	1	Arm - Inner 2	
109	1001212958	2	Arm - Outer 2	
110	1001212963	1	Arm - Outer 3 (LH)	
111	1001212964	1	Arm - Outer 3 (RH)	
112	1001212967	2	Arm - Outer 4	
113	1001212970	1	Arm - Inner 4	
114	1001212971	1	Arm - Inner 5	
115	1001212972	1	Arm - Outer 5	

https://truckmanualshub.com/

https://truckmanualshub.com/

FIGURE 3-2. ARM GUARD INSTALLATION

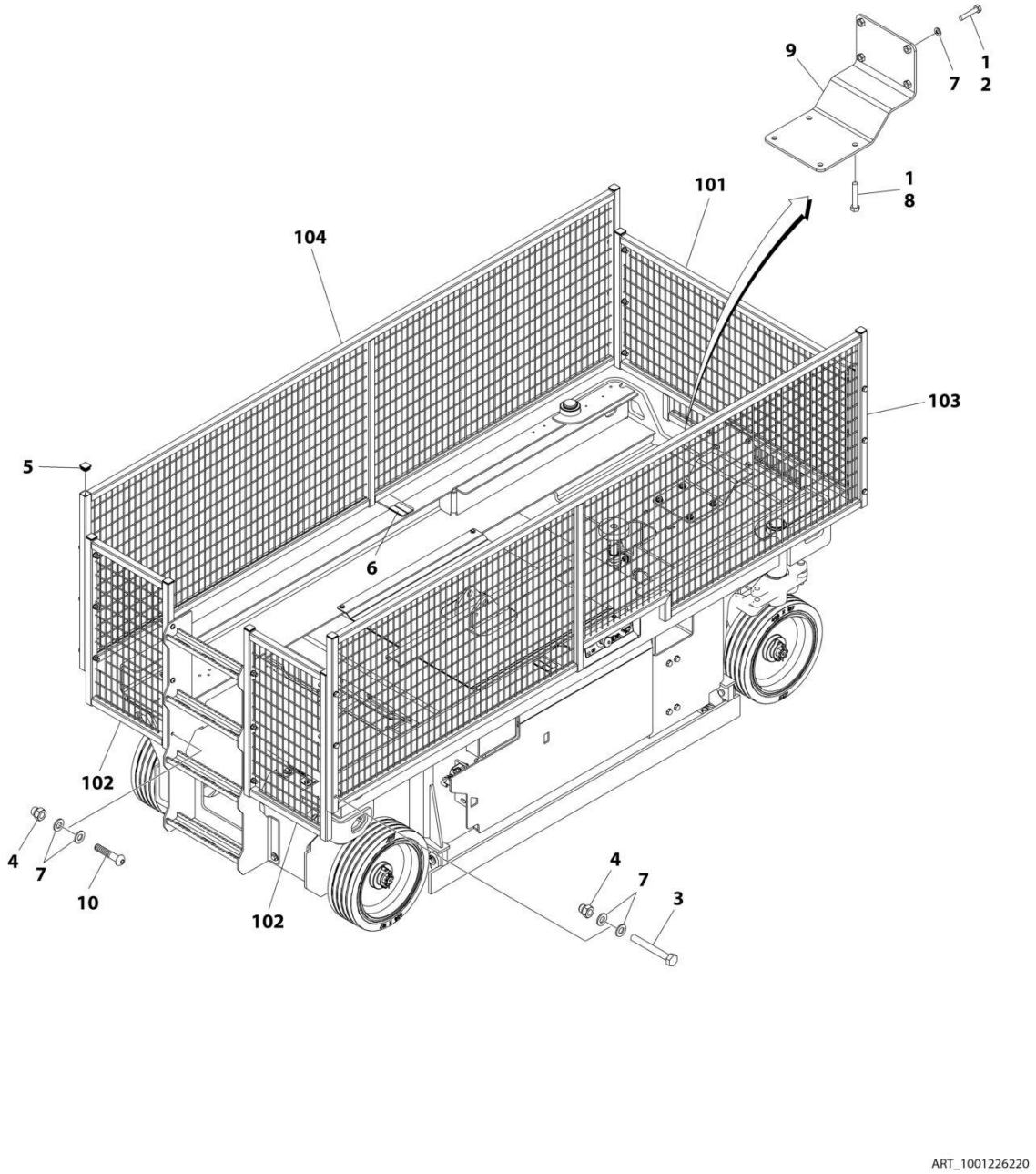

https://truckmanualshub.com/

FIGURE 3-2. ARM GUARD INSTALLATION

ITEM	PART NUMBER	QTY	DESCRIPTION	REV
	1001226220	Ref	ARM GUARD INSTALLATION	A
1	0100011	AR	Compound, Locking	
2	0701019	4	Bolt M10 x 55	
3	0701024	12	Bolt M10 x 80	
4	3291006	18	Nut M10	
5	3520072	10	Plug	
6	4420062	1 ft/30cm	Tape	
7	4812000	40	Washer M10	
8	1001098828	4	Bolt M12 x 70 Garde 10.9	
9	1001226215	1	Bracket	
10	1001229529	6	Screw M10 x 50	
100	1001226219	1	Arm Guard Kit (Not Shown)	
101	1001226216	1	Guard, Arm (Front)	
102	1001226218	2	Guard, Arm (Rear)	
103	1001229950	1	Guard, Arm (RH)	
104	1001229951	1	Guard, Arm (LH)	

https://truckmanualshub.com/

https://truckmanualshub.com/

SECTION 4 - PLATFORM

https://truckmanualshub.com/

FIGURE 4-1. PLATFORM INSTALLATION

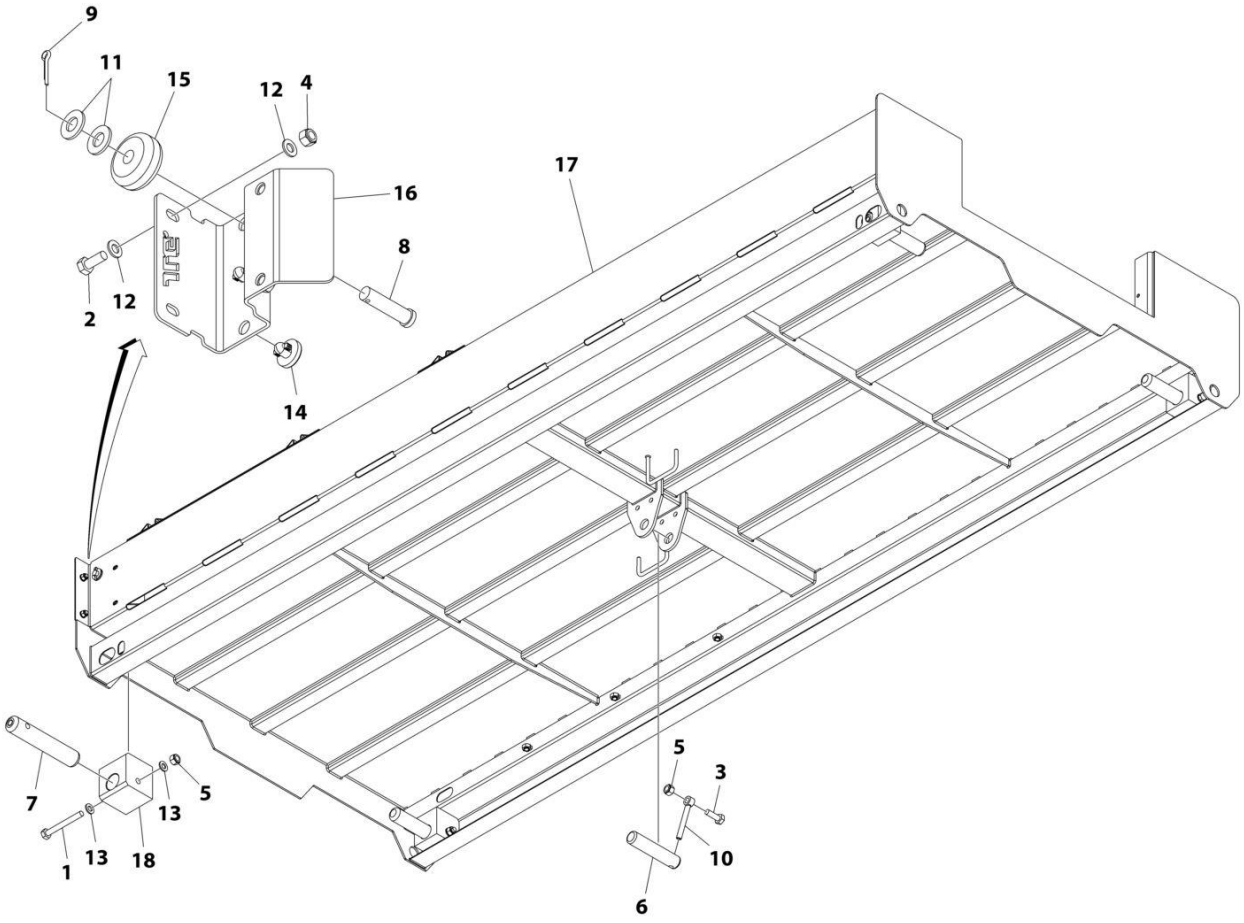

ART_1001213267

https://truckmanualshub.com/

FIGURE 4-1. PLATFORM INSTALLATION

ITEM	PART NUMBER	QTY	DESCRIPTION	REV
	1001213267	Ref	PLATFORM INSTALLATION	F
1	0701026	4	Bolt M10 x 90	
2	0760810	4	Bolt M8 x 20	
3	0761014	1	Bolt M10 x 30	
4	3290805	4	Nut M8	
5	3291005	5	Nut M10	
6	3422943	1	Pin	
7	1001215790	4	Pin	
8	3430816	2	Pin	
9	3450403	2	Pin 1/8 x 3/4	
10	3841143	1	Keeper, Pin	
11	4711800	4	Washer 1/2	
12	4811900	8	Washer M8	
13	4812000	8	Washer M10	
14	1001137675	4	Bumper	
15	1001205422	2	Roller	
16	1001210064	2	Support, Roller	
17	1001213275	1	Platform	
18	1001214268	4	Block, Slide	

https://truckmanualshub.com/

FIGURE 4-2. PLATFORM EXTENSION INSTALLATION

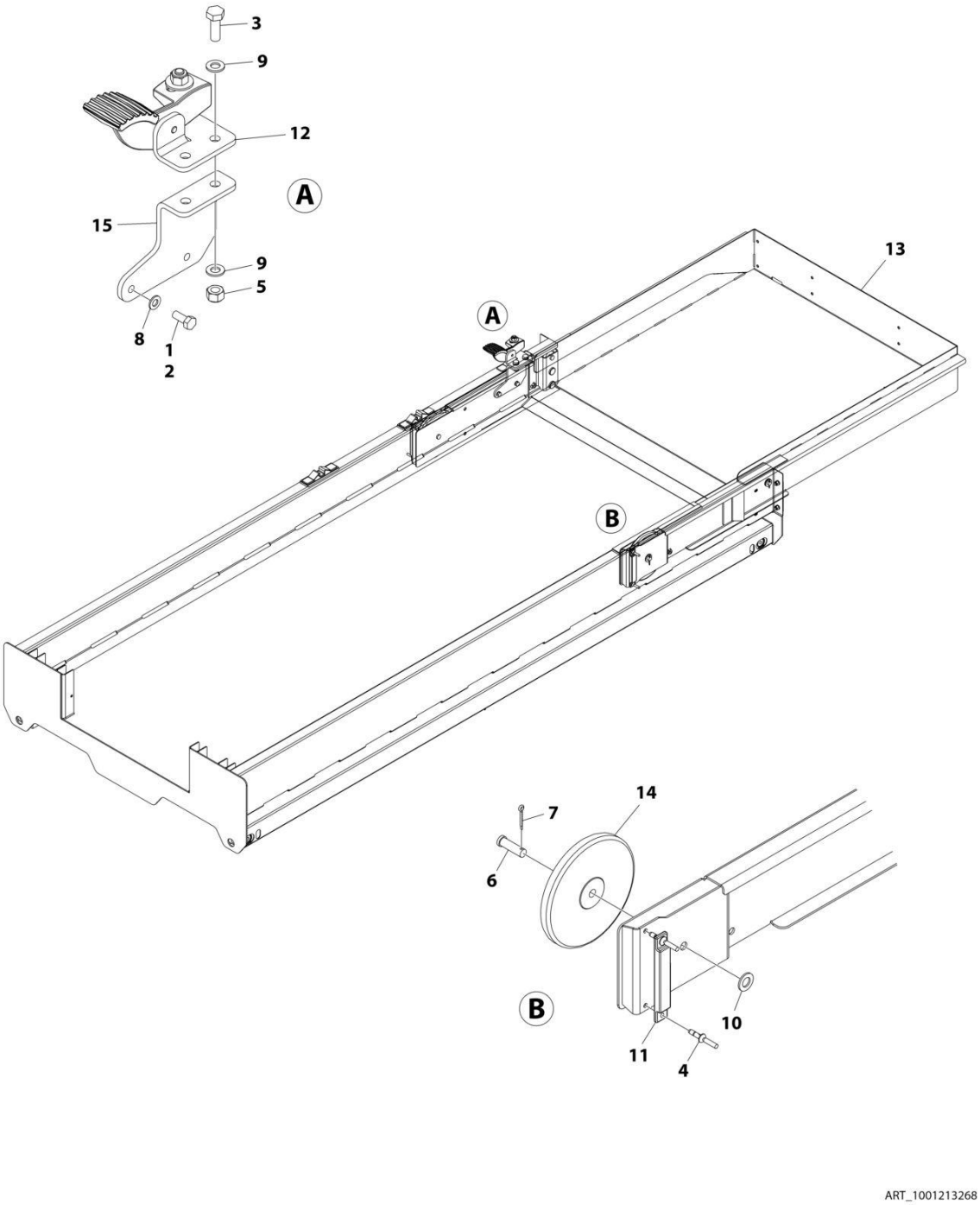

https://truckmanualshub.com/

FIGURE 4-2. PLATFORM EXTENSION INSTALLATION

ITEM	PART NUMBER	QTY	DESCRIPTION	REV
	1001213268	Ref	PLATFORM EXTENSION INSTALLATION	C
1	0100011	AR	Compound, Locking	
2	0760810	AR	Bolt M8 x 20	
2	0760812	AR	Bolt M8 x 25	
3	0761014	2	Bolt M10 x 30	
4	2080040	4	Fastener	
5	3291005	2	Nut M10	
6	3430813	2	Pin	
7	3450404	2	Pin 1/8 x 1	
8	4811900	2	Washer M8	
9	4812000	4	Washer M10	
10	4812200	2	Washer M14	
11	1001208852	2	Pad, Slide	
12	1001209256	1	Bracket, Latch **(Prior to SN 0200267720, Prior to SN B200051692)**	
12	1001234407	1	Bracket, Latch **(SN 0200267720 to Present, SN B200051692 to Present)**	
13	1001213470	1	Extension	
14	1001213550	2	Roller	
15	1001213838	1	Plate	

https://truckmanualshub.com/

FIGURE 4-3. RAILS INSTALLATION (SIDE BY SIDE)

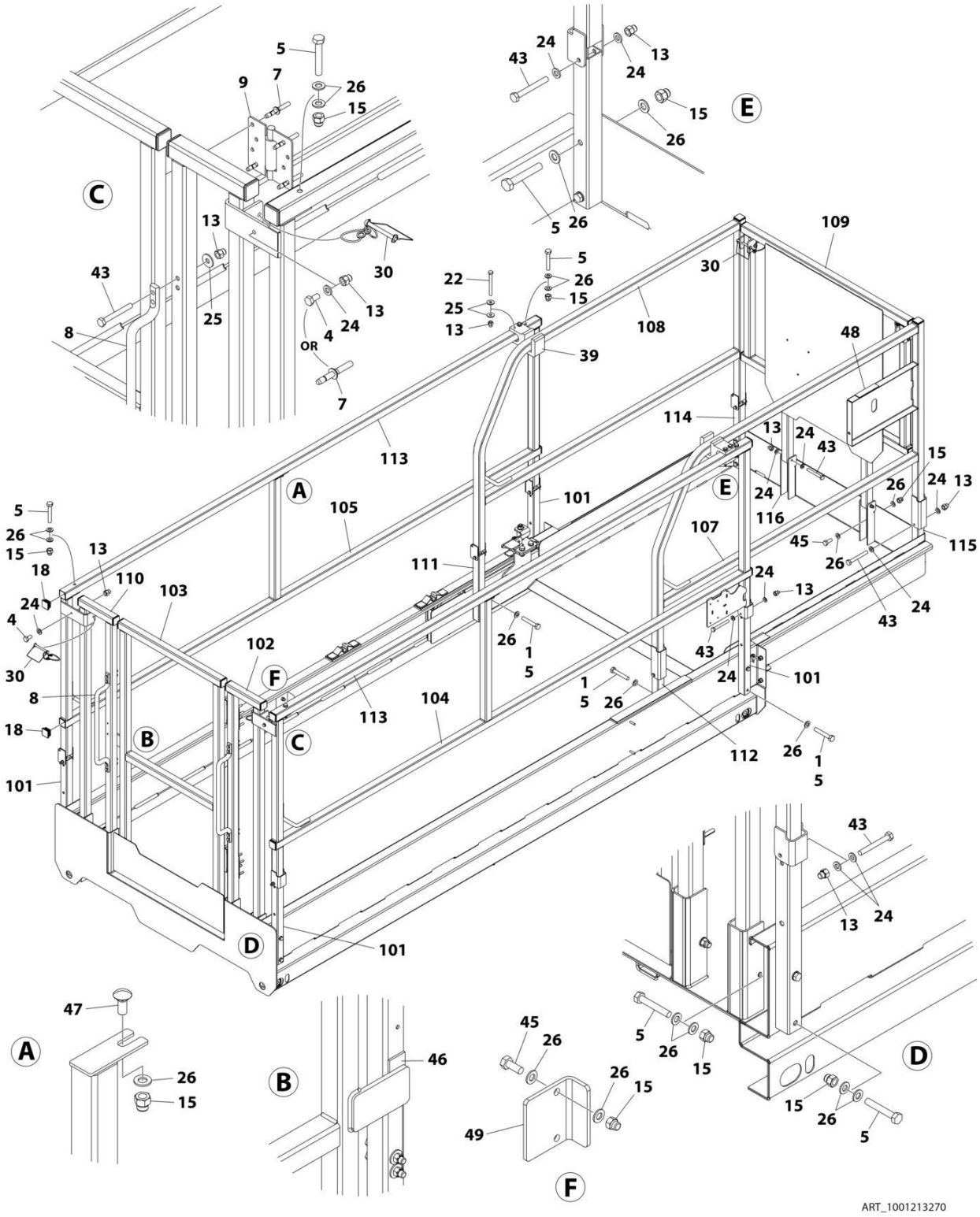

https://truckmanualshub.com/

FIGURE 4-3. RAILS INSTALLATION (SIDE BY SIDE)

ITEM	PART NUMBER	QTY	DESCRIPTION	REV
	1001213270	Ref	RAILS INSTALLATION (SIDE BY SIDE)	J
1	0100011	AR	Compound, Locking	
4	0760606	AR	Bolt M6 x 12	
5	0700818	24	Bolt M8 x 50	
7	2080040	AR	Fastener	
8	2560176	2	Handle **(Prior to SN B200051326, Prior to SN 0200268303)**	
9	2600281	2	Hinge	
13	3290606	AR	Nut M6	
15	3290806	AR	Nut M8	
18	3520072	20	Plug	
22	0700621	AR	Bolt M6 x 65	
22	0700617	AR	Bolt M6 x 45	
24	4811700	AR	Washer M6	
25	4811702	AR	Washer M6	
26	4811900	AR	Washer M8	
30	1001187587	1	Pin, Snap with Lanyard	
39	1001213884	NLA	Pad, Slide (Use p/n 1001237911) **(Prior to SN B200051326, Prior to SN 0200268303)**	
39	1001237911	2	Bracket, Slide **(SN B200051326 to Present, SN 0200268303 to Present)**	
43	0700618	AR	Bolt M6 x 50	
45	0760810	AR	Bolt M8 x 20	
46	3080007	1	Magnet, Gate	
47	1001186235	2	Bolt M8 x 20	
48	4420062	4 in/ 10cm	Tape	
49	1001232622	1	Bracket, Stop **(SN B200044498 to Present, SN 0200266699 to Present)**	
	1001218264	Ref	Rail Kit	
101	1001213393	4	Tube	
102	1001213394	1	Rail, Rear (RH)	
103	1001213397	1	Gate	
104	1001222907	1	Rail, Side (RH)	
105	1001222913	1	Rail, Side (LH)	
107	1001213915	1	Rail, Extension Side (RH)	
108	1001213916	1	Rail, Extension Side (LH)	
109	1001213931	1	Rail, Extension Front	
110	1001222742	1	Rail, Rear (LH)	
111	1001222861	1	Tube (LH)	
112	1001222869	1	Tube (RH)	
113	1001223040	2	Rail, Top	
114	1001223165	1	Tube, Extension (LH)	
115	1001223166	1	Tube, Extension (RH)	
116	1001223053	2	Bracket	

https://truckmanualshub.com/

FIGURE 4-4. RAILS INSTALLATION (TUBE IN TUBE)

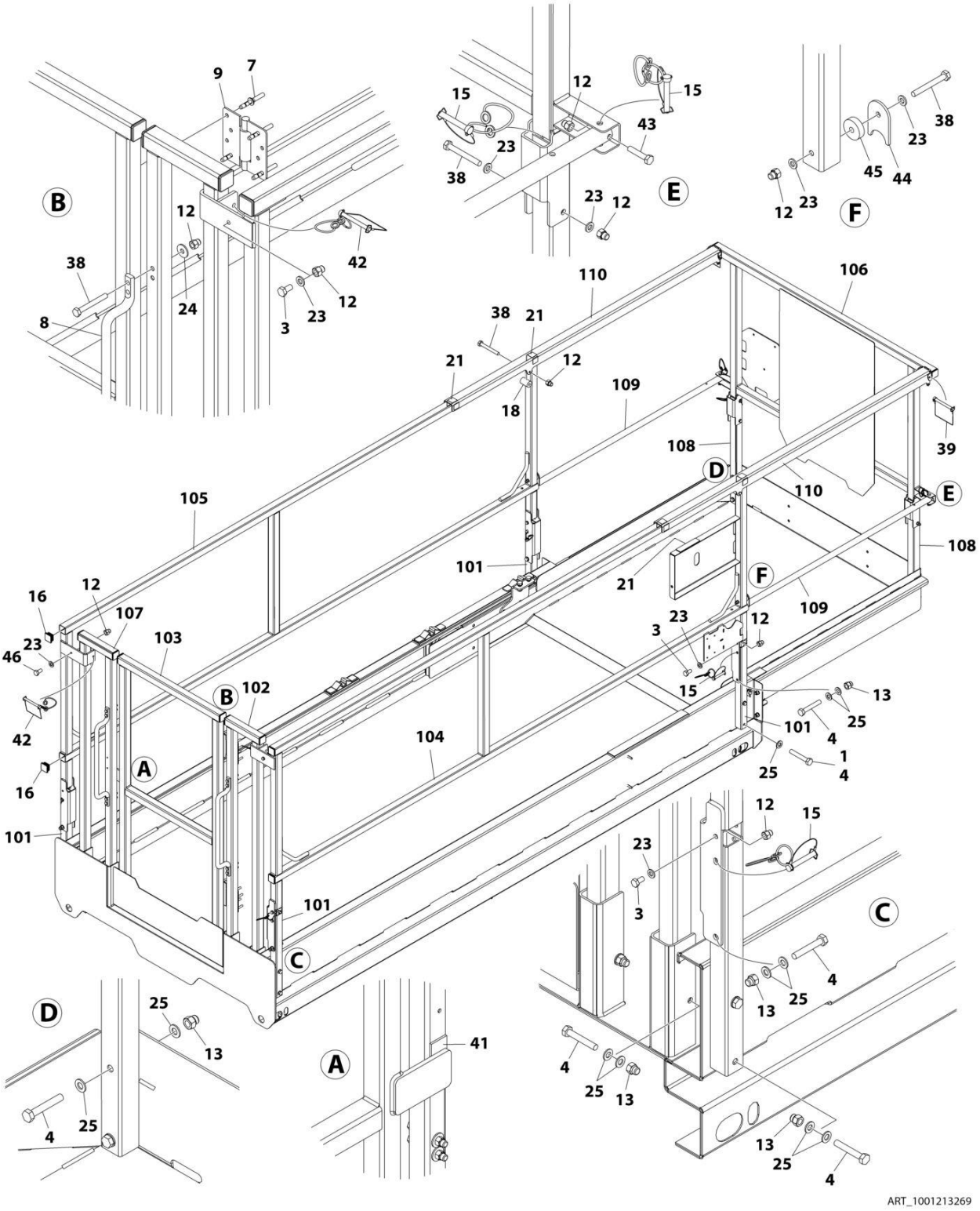

https://truckmanualshub.com/

FIGURE 4-4. RAILS INSTALLATION (TUBE IN TUBE)

ITEM	PART NUMBER	QTY	DESCRIPTION	REV
	1001213269	Ref	RAILS INSTALLATION (TUBE IN TUBE)	H
1	0100011	AR	Compound, Locking	
3	0760606	4	Bolt M6 x 12	
4	0700818	20	Bolt M8 x 50	
7	2080040	16	Fastener	
8	2560176	2	Handle **(Prior to SN B200051326, Prior to SN 0200268303)**	
9	2600281	2	Hinge	
12	3290606	AR	Nut M6	
13	3290806	16	Nut M8	
15	3423278	8	Pin, Snap	
16	3520072	14	Plug	
18	3860111	2	Roller	
21	4420062	16 in/ 40cm	Tape	
23	4811700	14	Washer M6	
24	4811702	AR	Washer M6	
25	4811900	36	Washer M8	
38	0700618	AR	Bolt M6 x 50	
39	3422219	2	Pin, Snap	
41	3080007	1	Magnet, Gate	
42	1001187587	2	Pin, Snap with Lanyard	
43	0700614	2	Bolt M6 x 30	
44	1001227972	2	Plate, Extension Rod Stop	
45	1001227994	2	Washer	
46	0760608	2	Bolt M6 x 16	
	1001218263	Ref	RAIL KIT	
101	1001213393	4	Tube	
102	1001213394	1	Rail, Rear (RH)	
103	1001213397	1	Gate	
104	1001213403	1	Rail, Side (RH)	
105	1001213407	1	Rail, Side (LH)	
106	1001213409	1	Rail, Extension Front	
107	1001222742	1	Rail, Rear (LH)	
108	1001223164	2	Tube, Extension	
109	1001227969	2	Rail, Center Slide	
110	1001213416	2	Rail, Top Slide	

https://truckmanualshub.com/

FIGURE 4-5. EXTENSION HANDLES INSTALLATION (OPTIONAL)

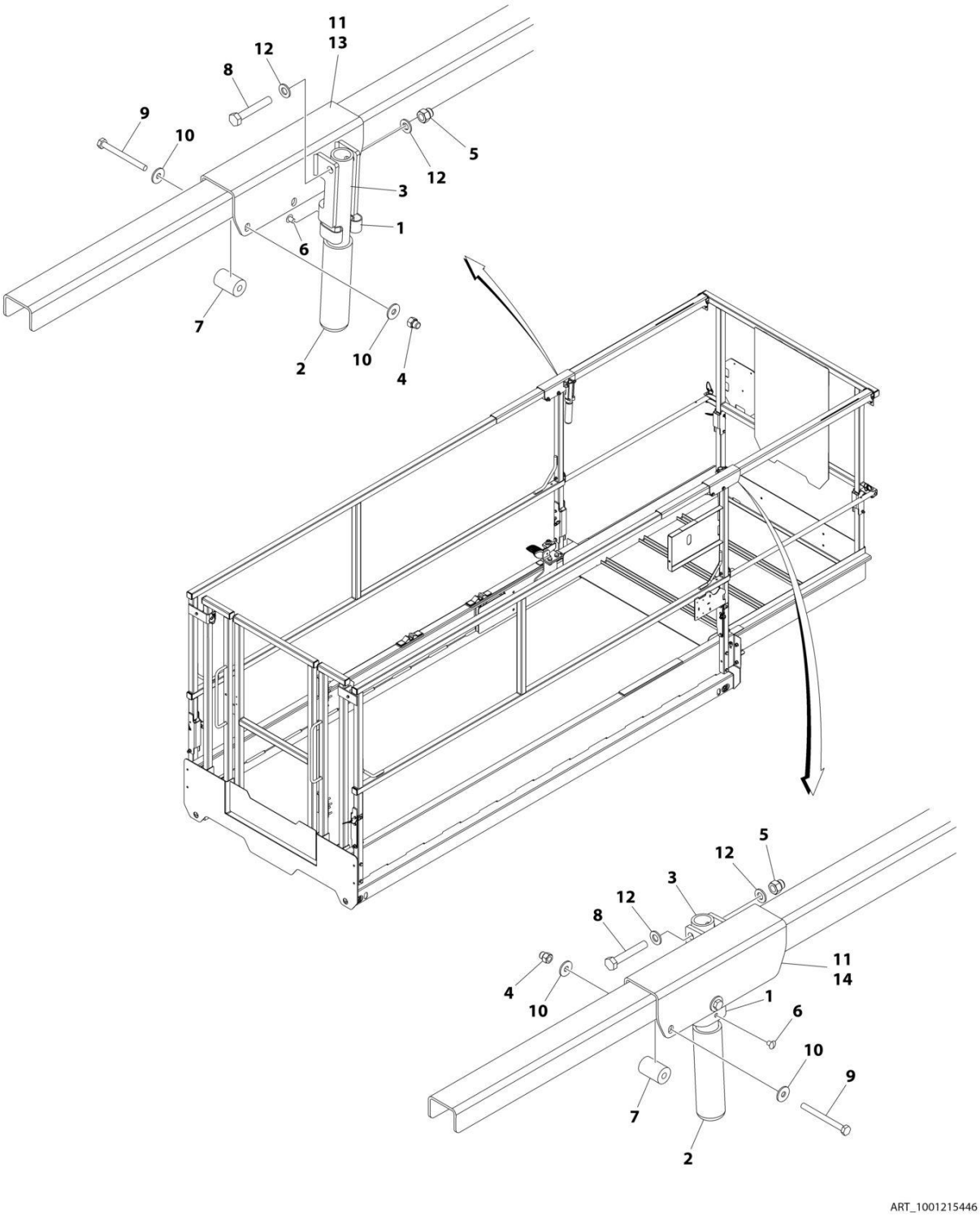

https://truckmanualshub.com/

FIGURE 4-5. EXTENSION HANDLES INSTALLATION (OPTIONAL)

ITEM	PART NUMBER	QTY	DESCRIPTION	REV
	1001215446	Ref	EXTENSION HANDLES INSTALLATION (OPTIONAL)	E
1	1380132	2	Clip	
2	2560088	2	Grip	
3	2560190	2	Handle	
4	3290606	2	Nut M6	
5	3290806	2	Nut M8	
6	3820019	2	Rivet	
7	3860111	2	Roller	
8	0700817	AR	Bolt M8 x 45	
8	0700818	AR	Bolt M8 x 50	
9	0700620	AR	Bolt M6 x 60	
9	0700621	AR	Bolt M6 x 65	
10	4811700	AR	Washer M6	
10	4811702	AR	Washer M6	
11	1001216823	2	Bracket **(Prior to SN 0200267774, SN B200000100 to Present)**	
12	4811900	AR	Washer M8	
13	1001235560	1	Bracket (LH) **(SN 0200267774 to Present)**	
14	1001235561	1	Bracket (RH) **(SN 0200267774 to Present)**	

https://truckmanualshub.com/

FIGURE 4-6. PLATFORM CONSOLE INSTALLATION

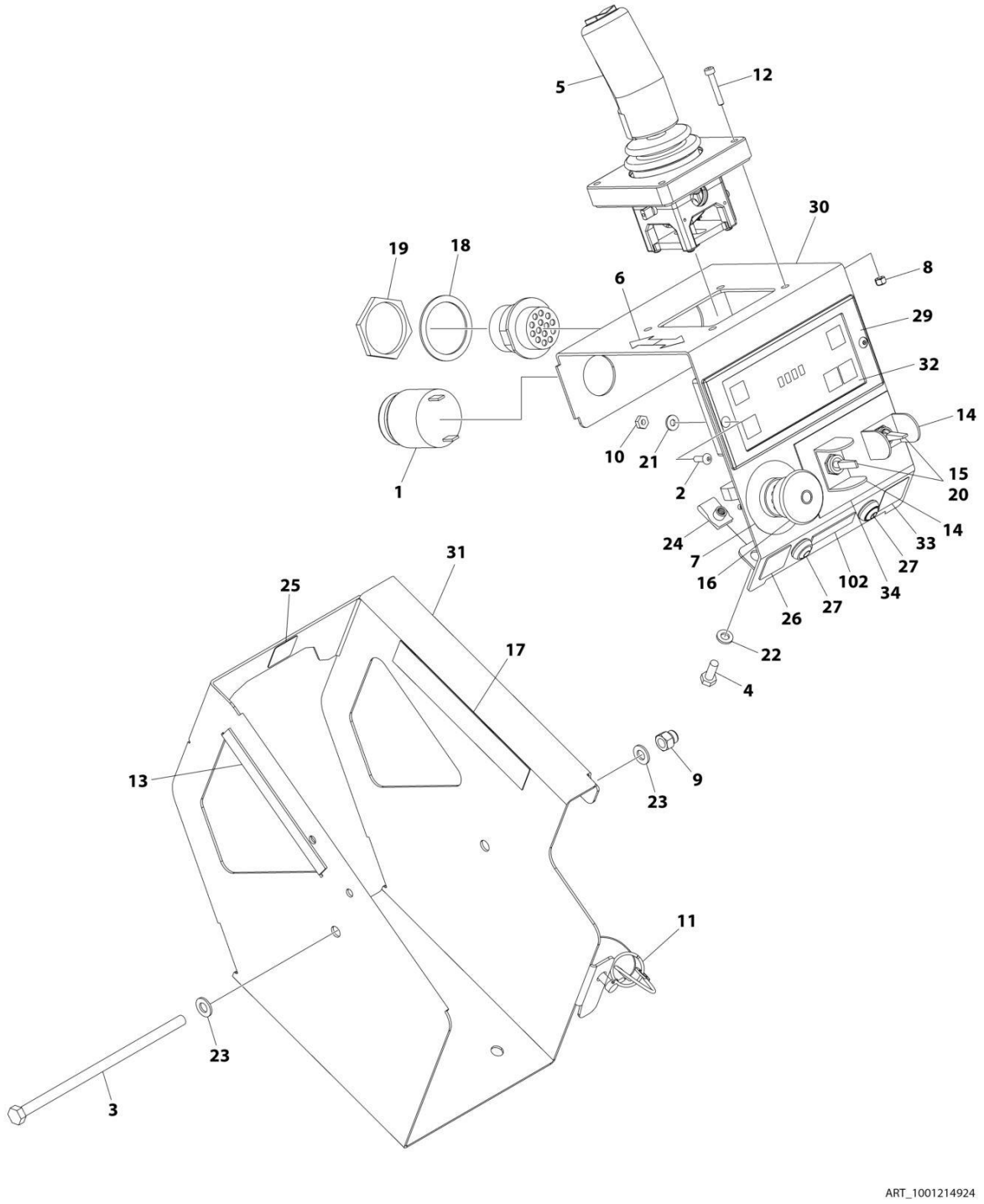

https://truckmanualshub.com/

FIGURE 4-6. PLATFORM CONSOLE INSTALLATION

ITEM	PART NUMBER	QTY	DESCRIPTION	REV
	1001214924	Ref	PLATFORM CONSOLE ASSEMBLY	D
1	0140030	1	Alarm	
2	0630473	2	Screw #8 x 1/2	
3	0700835	1	Bolt M8 x 180	
4	0760610	2	Bolt M6 x 20	
5	1600402	1	Controller Assembly (See Separate Breakdown in this Section)	
6	1703819	1	Decal - Arrow	
7	1704260	1	Decal - Emergency Stop	
8	3290405	4	Nut M4	
9	3290806	1	Nut M8	
10	3310805	8	Nut #8	
11	3423278	1	Pin, Snap with Lanyard	
12	4031509	4	Capscrew M4 x 25	
13	4060803	6 in /14cm	Flex-Trim	
14	4060906	2	Guard, Switch	
15	4360345	2	Switch, Toggle	
16	4360475	1	Switch, Emergency Stop	
16	7020175	1	Cap	
16	7020176	1	Block, Contact	
17	4420062	12 in/ 30cm	Tape	
18	4460496	1	Washer, Terminal	
19	4460497	1	Nut, Terminal	
20	4711700	2	Washer 7/16	
21	4750800	2	Washer #8	
22	4811700	2	Washer M6	
23	4811900	2	Washer M8	
24	1001130220	2	Nut, Tinnerman M6	
25	1001132358	1	Decal - Steer	
26	1001132361	1	Decal - Horn	
27	1001200633	2	Switch - Push Button **(Prior to SN B200045699, Prior to SN 0200266945)**	
27	1001226749	2	Switch - Push Button **(SN B200045699 to Present, SN 0200266945 to Present)**	
28	1001200819	1	Platform Control Box Harness (Not Shown) (See Separate Breakdown in ELECTRICAL SECTION)	
29	1001224873	1	Module, Platform Control **(Prior to SN B200045699, Prior to SN 0200266945)**	
29	1001228112	1	Module, Platform Control **(SN B200045699 to Present, SN 0200266945 to Present)**	
30	1001209595	1	Plate, Box (Inside)	
31	1001209596	1	Plate, Box (Outside)	
32	1001210436	1	Decal - Platform Control **(Prior to SN B200045699, Prior to SN 0200266945)**	
32	1001218285	1	Decal - Platform Control **(SN B200045699 to Present, SN 0200266945 to Present)**	
33	1001213886	1	Decal - Indoor/Outdoor	
34	1001220893	1	Decal - Lift/Drive Function	
	1001214151	Ref	PLATFORM CONSOLE INSTALLATION	D
102	1001220889	1	Decal - 3246R/4045R	

https://truckmanualshub.com/

FIGURE 4-7. DRIVE/STEER CONTROLLER ASSEMBLY

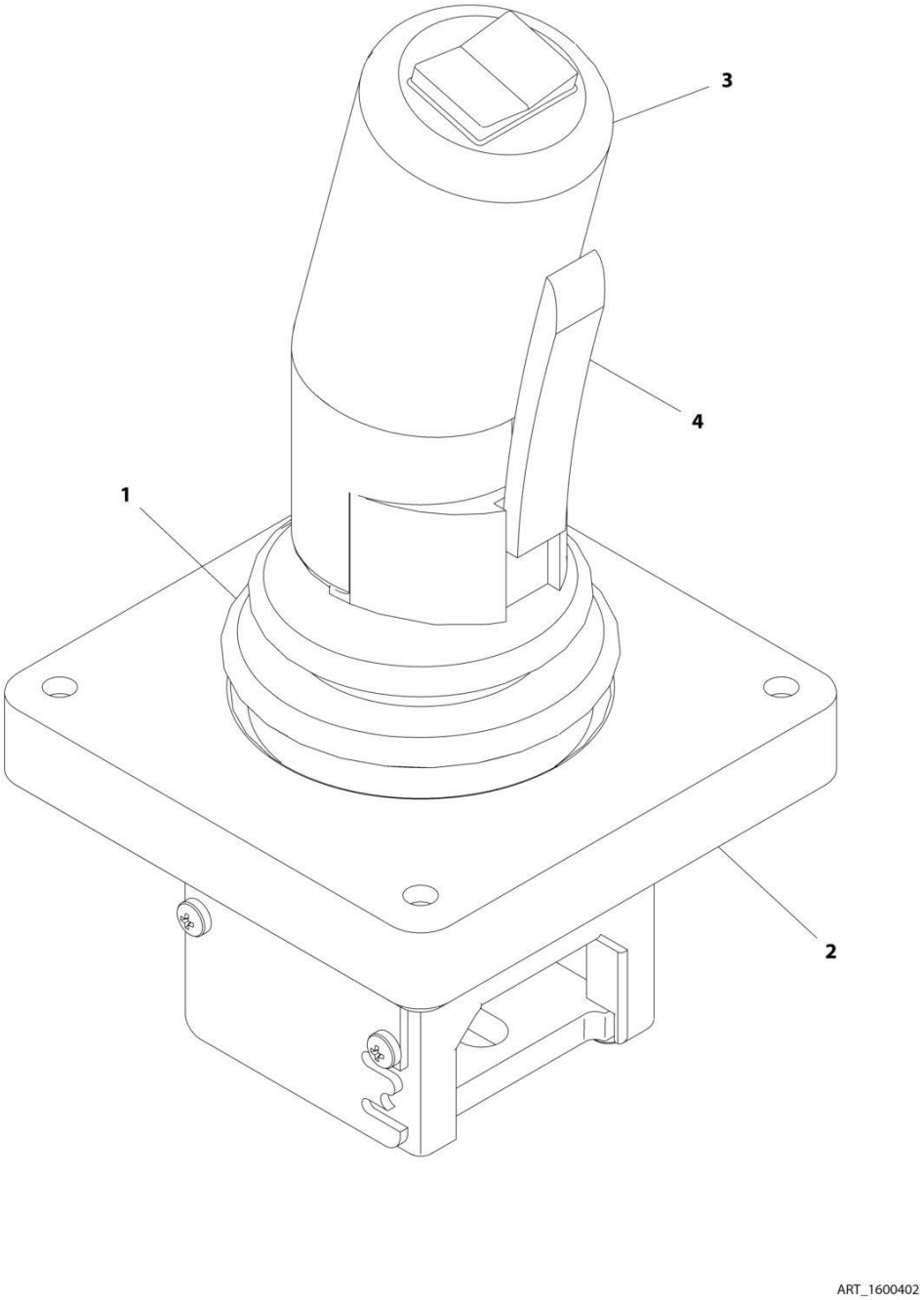

https://truckmanualshub.com/

FIGURE 4-7. DRIVE/STEER CONTROLLER ASSEMBLY

ITEM	PART NUMBER	QTY	DESCRIPTION	REV
	1600402	Ref	DRIVE/STEER CONTROLLER ASSEMBLY	A
1	70001250	1	Boot, Panel	
2	70001252	1	Gasket, Mounting	
2	70001251	1	Bezel, Mounting	
3	70003650	1	Handle Repair Kit (Includes handle gasket, item #4 push button and item #4 lever installed in front handle half, back handle half, top actuator, boot and hardware)	
3	70000084	1	Cap, Rubber	
3	70000082	1	Microswitch	
3	7027766	1	Ring, Retaining	
3	7027365	1	Actuator, Handle	
3	70001253	1	Gasket, Handle	
3	70000683	4	Washer, Neoprene	
3	70000685	2	Spacer, Plastic	
3	70000686	2	Screw (Top)	
3	70000684	2	Screw (Bottom)	
4	7027367	1	Switch, Push Button	
4	7027765	1	Lever, Enable	

https://truckmanualshub.com/

FIGURE 4-8. ELECTRICAN'S TREE INSTALLATION (OPTIONAL)

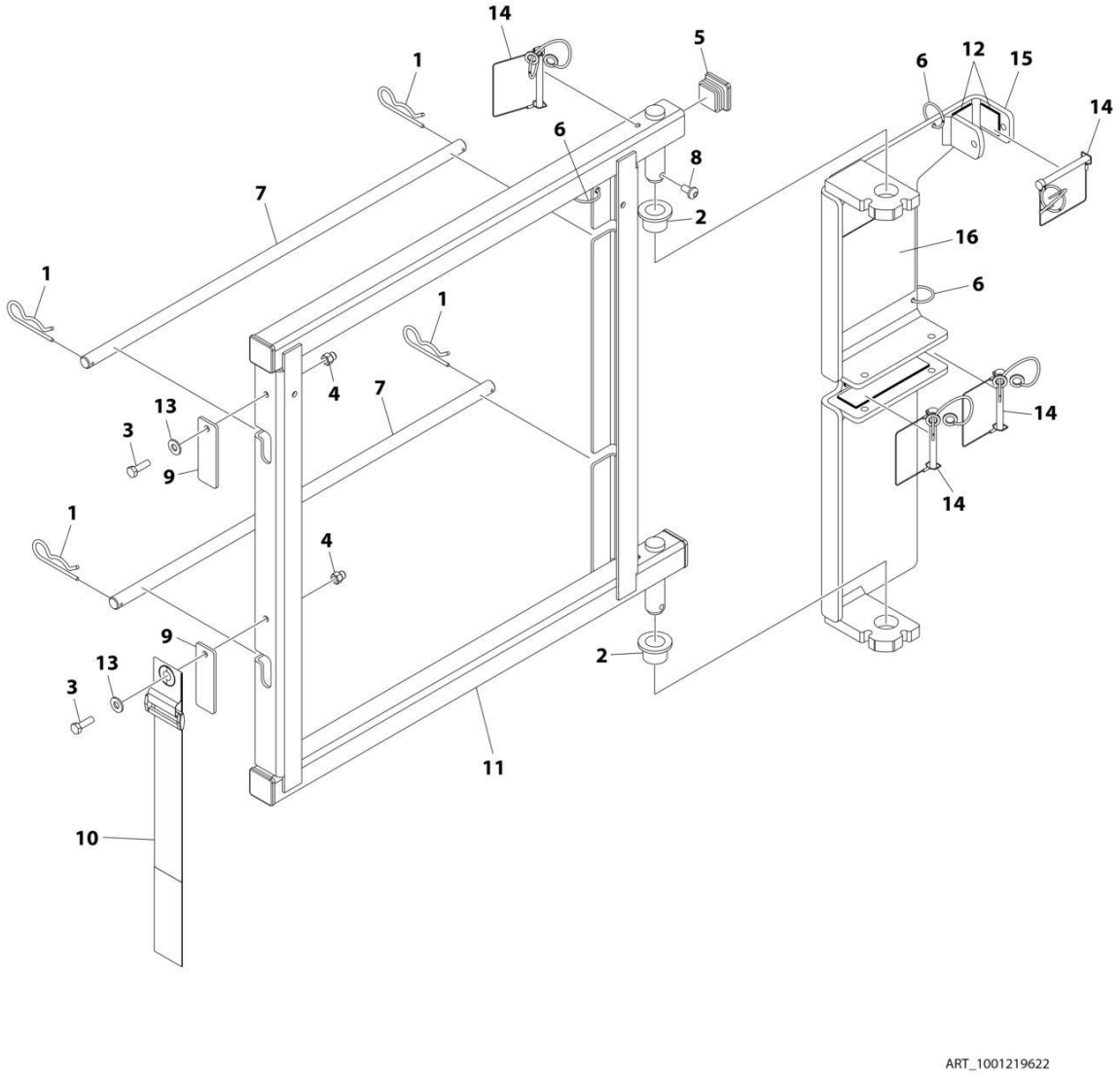

https://truckmanualshub.com/

FIGURE 4-8. ELECTRICAN'S TREE INSTALLATION (OPTIONAL)

ITEM	PART NUMBER	QTY	DESCRIPTION	REV
	1001214274	Ref	ELECTRICAN'S TREE INSTALLATION	A
	1001219622	Ref	ELECTRICAN'S TREE ASSEMBLY	A
1	80325	4	Hairpin	
2	0440223	2	Bushing	
3	0700610	2	Bolt M6 x 20	
4	3290606	2	Nut M6	
5	3520072	4	Plug	
6	3760170	3	Ring	
7	3841675	2	Rod, Spool	
8	4191706	1	Screw M6 x 12	
9	4220227	2	Stop	
10	4240003	1	Strap, Cinch	
11	4340947	1	Mount	
12	4420062	15 in/ 38cm	Tape	
13	4711400	2	Washer 1/4	
14	1001187587	4	Pin, Snap with Lanyard	
15	1001219670	1	Mount	
16	1001220894	1	Decal - Electrican's Tree	

https://truckmanualshub.com/

FIGURE 4-9. PANEL CARRIER INSTALLATION (OPTIONAL)

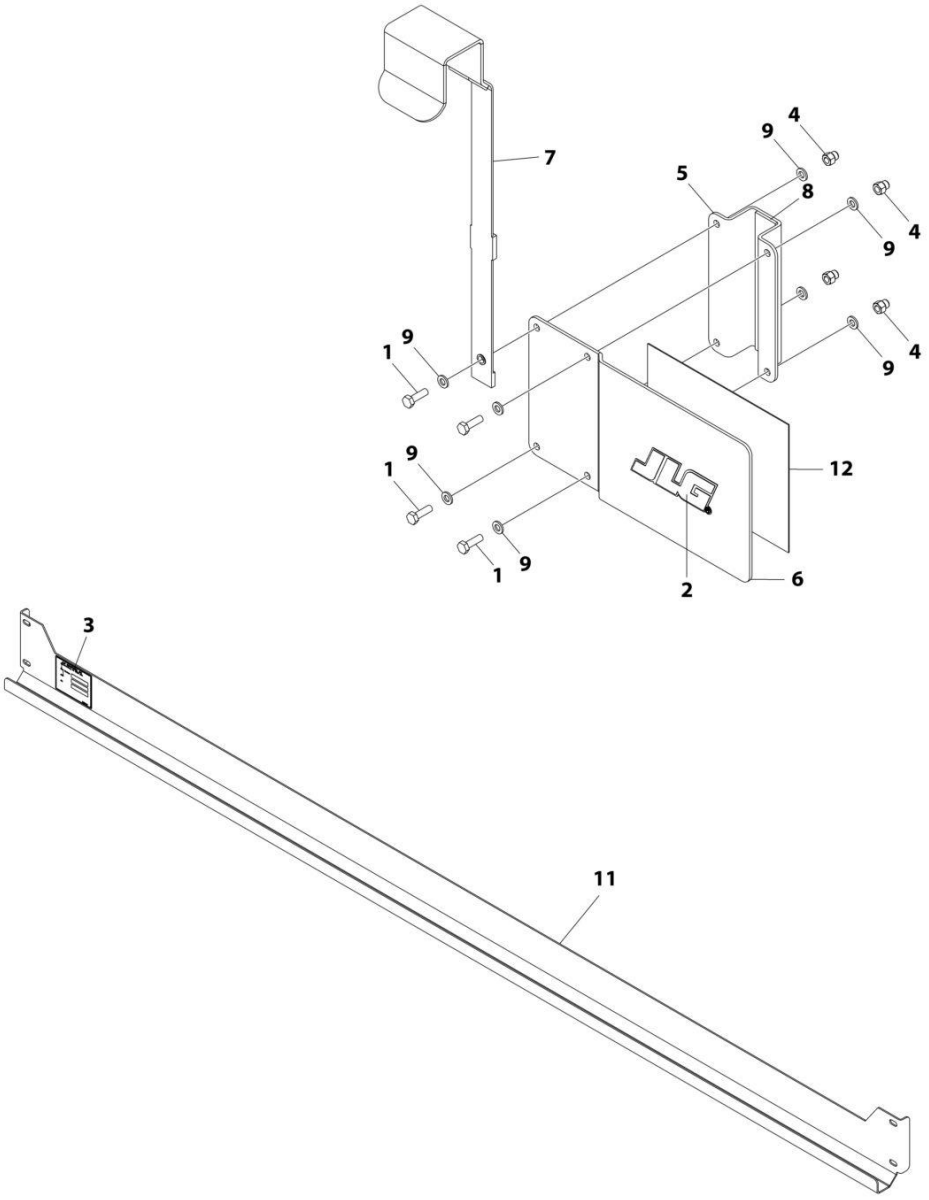

ART_1001216779

https://truckmanualshub.com/

FIGURE 4-9. PANEL CARRIER INSTALLATION (OPTIONAL)

ITEM	PART NUMBER	QTY	DESCRIPTION	REV
	1001216779	Ref	PANEL CARRIER INSTALLATION (OPTIONAL)	A
1	0760610	4	Bolt M6 x 20	
2	1702010	1	Decal - JLG	
3	See Note	NSS	Nameplate - Accessory SN (Note: Not Available for Purchase)	
4	3290606	4	Nut M6	
5	3574505	1	Bracket	
6	3574506	1	Plate, Billboard	
7	4240165	1	Strap	
8	4420037	6 in /15cm	Tape	
9	4811700	8	Washer M6	
11	1001216816	1	Channel, Panel Carrier	
12	1001220891	1	Decal - Capacity	

https://truckmanualshub.com/

FIGURE 4-10. PIPE RACKS INSTALLATION (SIDE BY SIDE RAILS) (OPTIONAL)

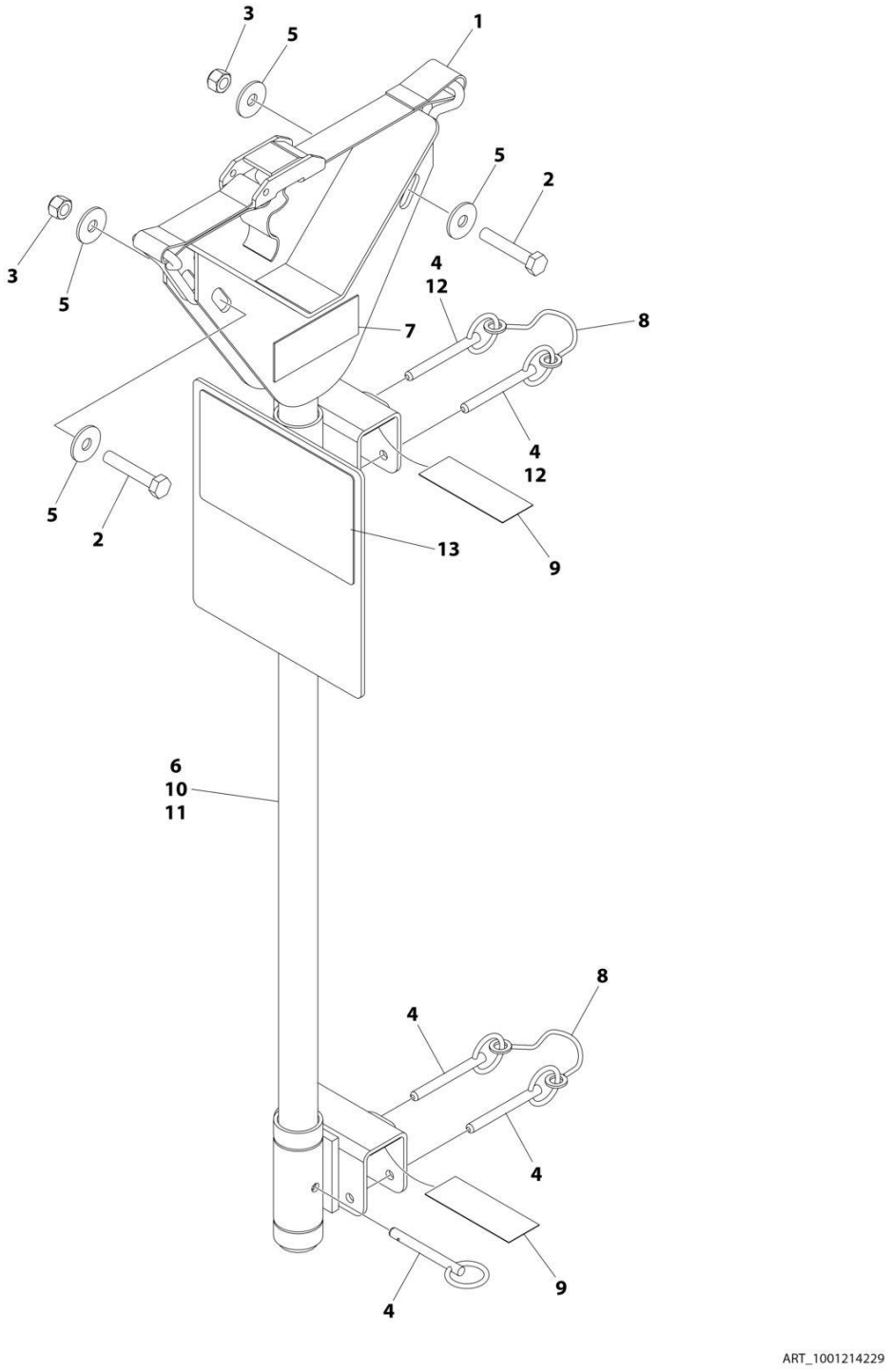

https://truckmanualshub.com/

FIGURE 4-10. PIPE RACKS INSTALLATION (SIDE BY SIDE RAILS) (OPTIONAL)

ITEM	PART NUMBER	QTY	DESCRIPTION	REV
	1001214229	Ref	PIPE RACKS INSTALLATION (SIDE BY SIDE RAILS) (OPTIONAL)	B
1	0480100	2	Strap	
2	0700817	4	Bolt M8 x 45	
3	3290805	4	Nut M8	
4	3422661	AR	Pin	
5	4811902	8	Washer M6	
6	4845582	2	Rack, Tube **(Prior to SN 0200268169, SN B200000100 to Present)**	
7	1001220892	2	Decal - Tube Rack Capacity **(Prior to SN 0200268169, SN B200000100 to Present)**	
8	1060379	4	Lanyard **(SN 0200268170 to Present, SN B2000051240 to Present)**	
9	4420062	AR	Tape **(SN 0200268170 to Present, SN B2000051240 to Present)**	
10	1001235498	1	Rack, Tube (Rear) **(SN 0200268170 to Present, SN B2000051240 to Present)**	
11	1001235509	1	Rack, Tube (Front) **(SN 0200268170 to Present, SN B2000051240 to Present)**	
12	1001235941	2	Pin **(SN 0200268170 to Present, SN B2000051240 to Present)**	
13	1001236621	2	Decal - Pipe Rack Capacity **(SN 0200268170 to Present, SN B2000051240 to Present)**	

https://truckmanualshub.com/

FIGURE 4-11. PIPE RACKS INSTALLATION (TUBE IN TUBE RAILS) (OPTIONAL)

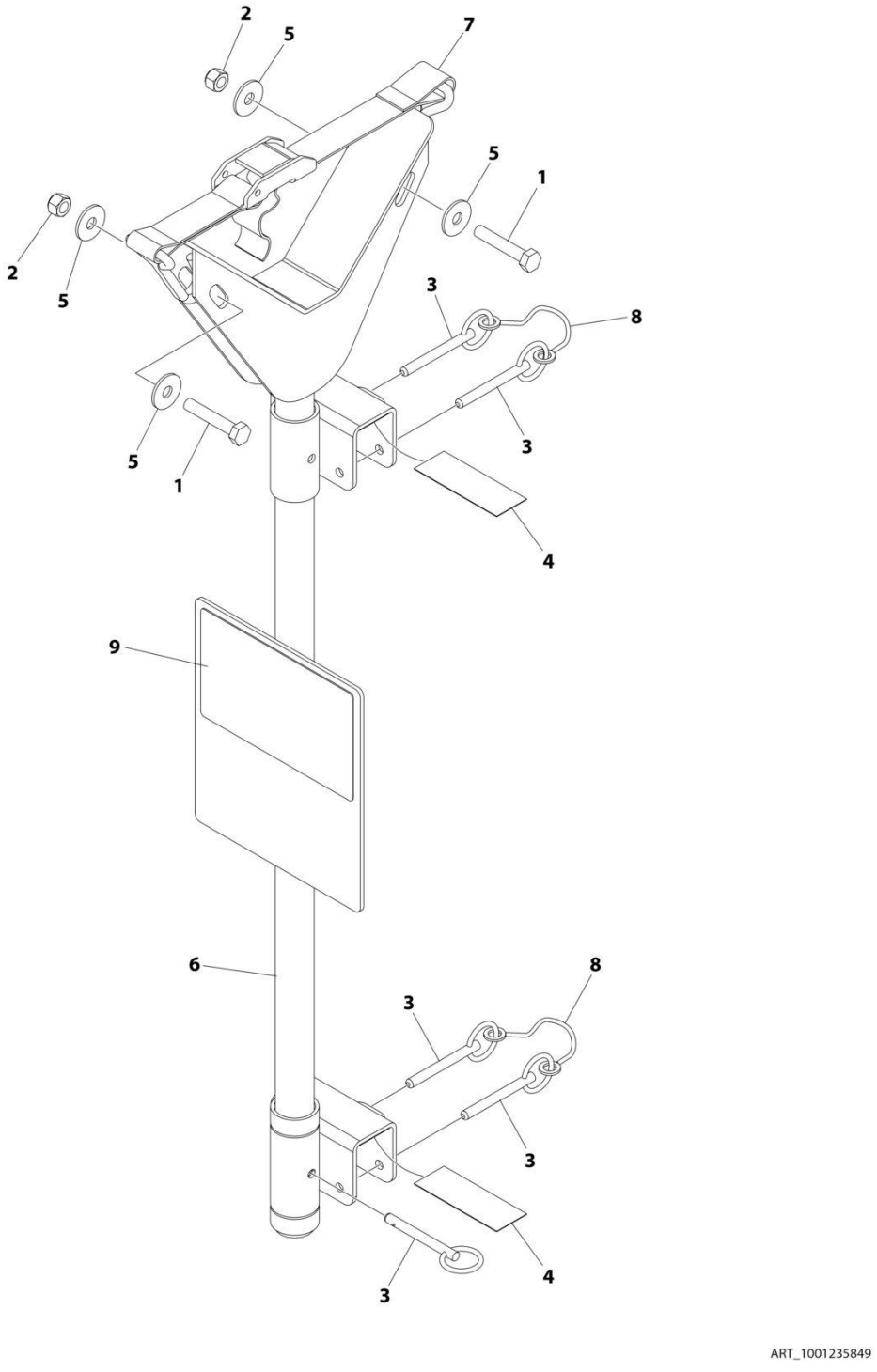

https://truckmanualshub.com/

FIGURE 4-11. PIPE RACKS INSTALLATION (TUBE IN TUBE RAILS) (OPTIONAL)

ITEM	PART NUMBER	QTY	DESCRIPTION	REV
	1001235849	Ref	PIPE RACKS INSTALLATION (OPTIONAL)	A
1	0700817	4	Bolt M8 x 45	
2	3290805	4	Nut M8	
3	3422661	10	Pin	
4	4420062	AR	Tape	
5	4811902	8	Washer M6	
6	1001235498	2	Rack, Tube	
7	0480100	2	Strap	
8	1060379	4	Lanyard	
9	1001236621	2	Decal - Tube Rack Capacity	

https://truckmanualshub.com/

FIGURE 4-12. QUIK WELDER INSTALLATION (OPTIONAL)

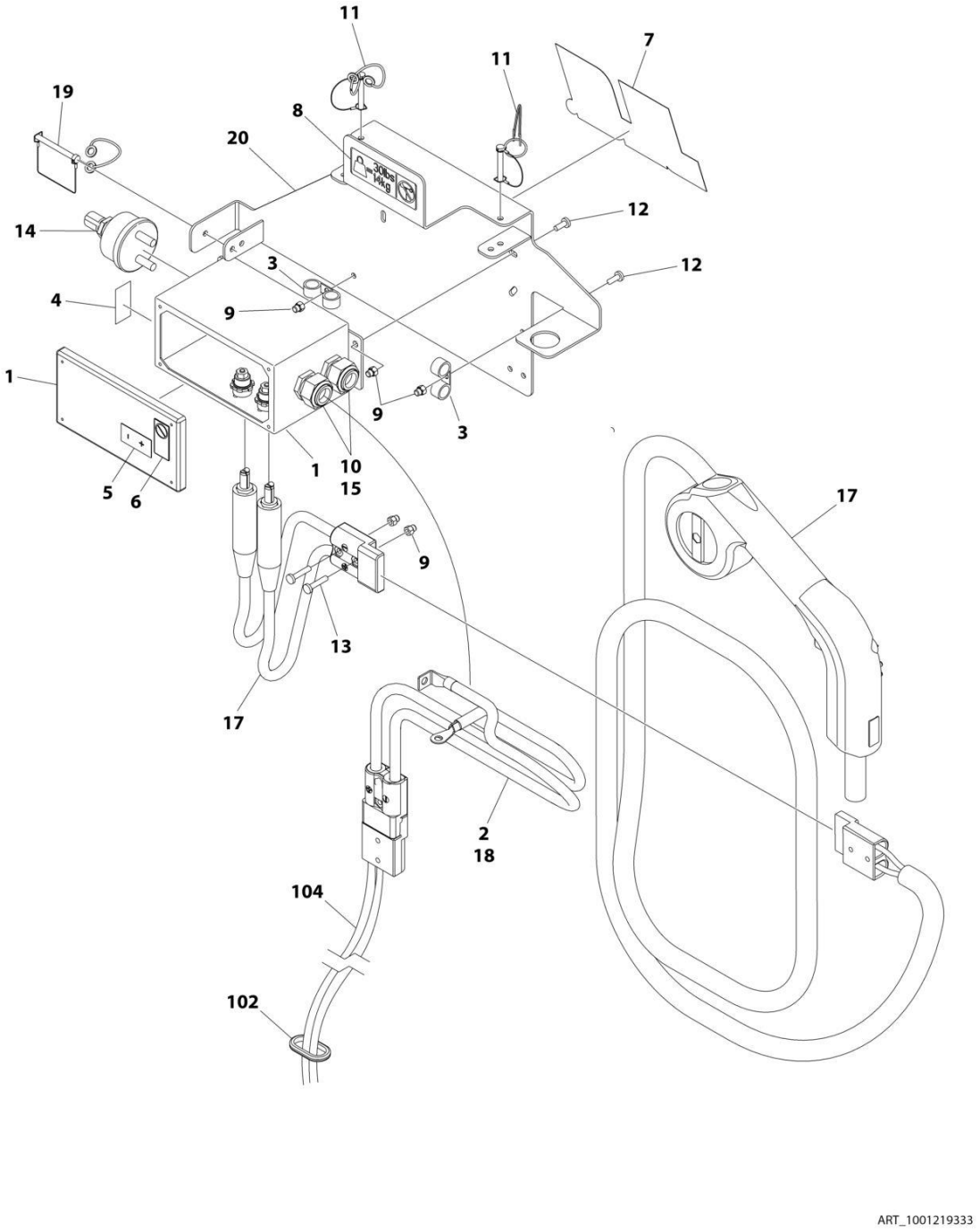

https://truckmanualshub.com/

FIGURE 4-12. QUIK WELDER INSTALLATION (OPTIONAL)

ITEM	PART NUMBER	QTY	DESCRIPTION	REV
	1001219333	Ref	QUIK WELDER KIT	C
1	0861527	1	Box, Disconnect	
2	1060957	1	Cable, Welder	
3	1320224	4	Clamp	
4	1705213	1	Decal - On/Off	
5	1705214	1	Decal - Plus/Minus	
6	1705305	1	Decal - Weld Lead	
7	1705754	1	Decal - JLG	
8	1705953	1	Decal - Weight	
9	3290606	8	Nut M6	
10	3300048	2	Nut - Conduit	
11	3423278	2	Pin, Snap	
12	4010608	6	Screw M6 x 16	
13	4010614	2	Screw M6 x 30	
14	4360155	1	Switch, Master Disconnect	
15	4460328	2	Connector, Strain Relief	
17	4530021	1	Welder Kit	
18	4923048	1	Cable, Quik Welder	
19	1001187587	1	Pin, Snap with Lanyard	
20	1001220158	1	Mount	
	1001214228	Ref	QUIK WELDER INSTALLATION	B
101	4240018	4	Tie-Strap (Not Shown)	
102	1001213945	1	Grommet	
104	1001219740	1	Cable, Quik Welder (Ground to Platform)	

https://truckmanualshub.com/

FIGURE 4-13. VISE INSTALLATION (OPTIONAL)

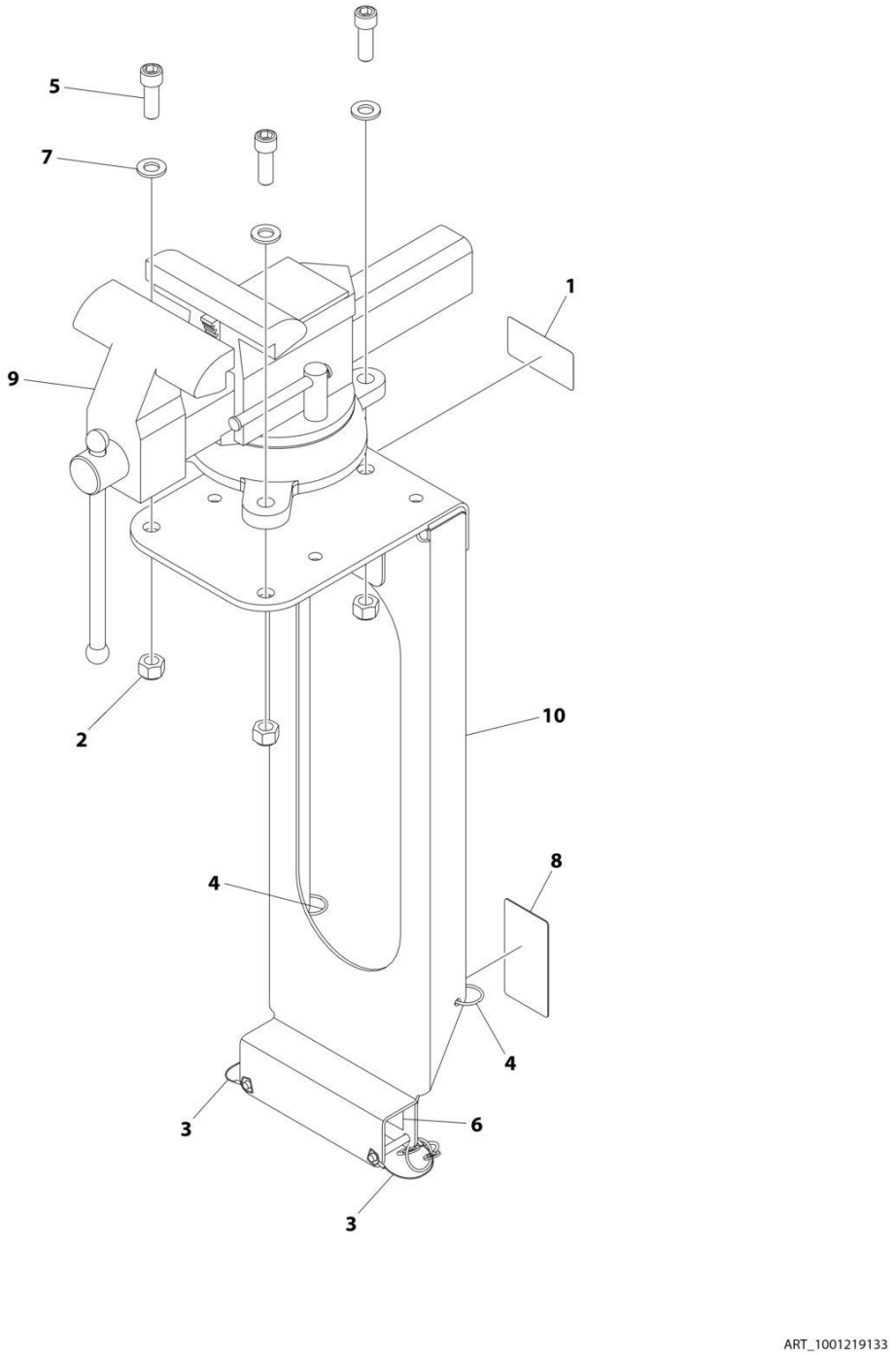

https://truckmanualshub.com/

FIGURE 4-13. VISE INSTALLATION (OPTIONAL)

ITEM	PART NUMBER	QTY	DESCRIPTION	REV
	1001219133	Ref	VISE INSTALLATION (OPTIONAL)	A
1	1705985	1	Decal - Weight	
2	3291205	3	Nut M12	
3	3423278	2	Pin, Snap with Lanyard	
4	3760170	2	Ring	
5	4032111	3	Capscrew M12 x 35	
6	4420062	39 in/ 99cm	Tape	
7	4812100	3	Washer M12	
8	8005670	1	Decal - Instruction/Read Operators Manual	
9	1001157050	1	Vise	
10	1001219319	1	Bracket	

https://truckmanualshub.com/

FIGURE 4-14. WORKSTATION INSTALLATION (OPTIONAL)

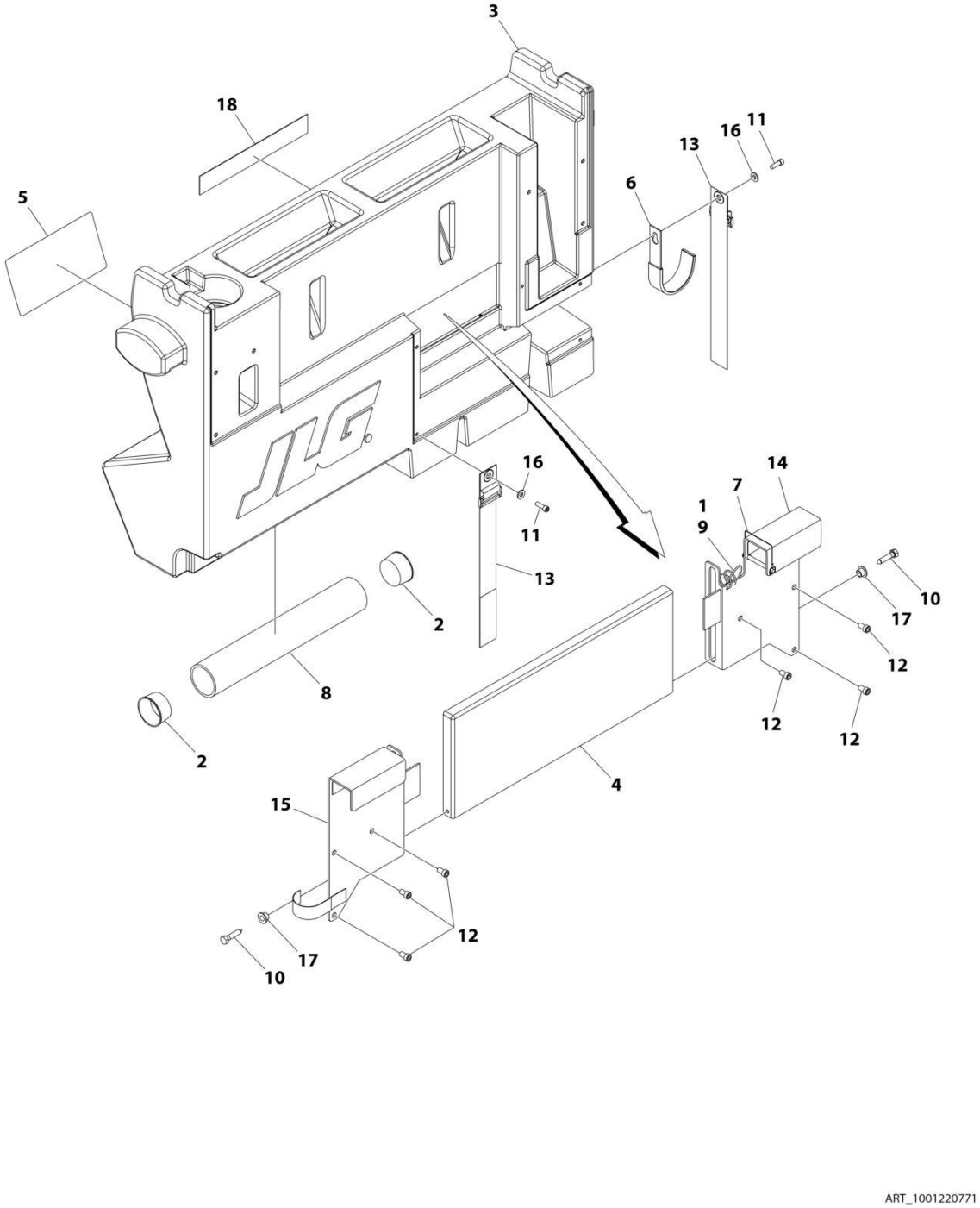

https://truckmanualshub.com/

FIGURE 4-14. WORKSTATION INSTALLATION (OPTIONAL)

ITEM	PART NUMBER	QTY	DESCRIPTION	REV
	1001218190	Ref	WORKSTATION INSTALLATION	A
	1001220771	Ref	WORKSTATION ASSEMBLY	A
1	1060379	1	Lanyard	
2	1120555	2	Cap	
3	1580023	1	Container, Work Bench	
4	1580024	1	Tray	
5	1705997	1	Decal - Workstation	
6	2700100	1	Hook	
7	3422219	1	Pin, Snap	
8	3460334	1	Tube	
9	3760170	2	Ring	
10	3900355	2	Screw 5/16	
11	3931412	2	Capscrew 1/4 x 3/4	
12	3931508	6	Capscrew 5/16 x 1/2	
13	4240003	2	Strap, Cinch	
14	4340853	1	Mount (RH)	
15	4340854	1	Mount (LH)	
16	4711400	2	Washer 1/4	
17	4740480	2	Insert	
18	1001220890	1	Decal - Workstation Capacity	

https://truckmanualshub.com/

FIGURE 4-15. OVERHEAD PROTECTION INSTALLATION (KOREAN SPECS)

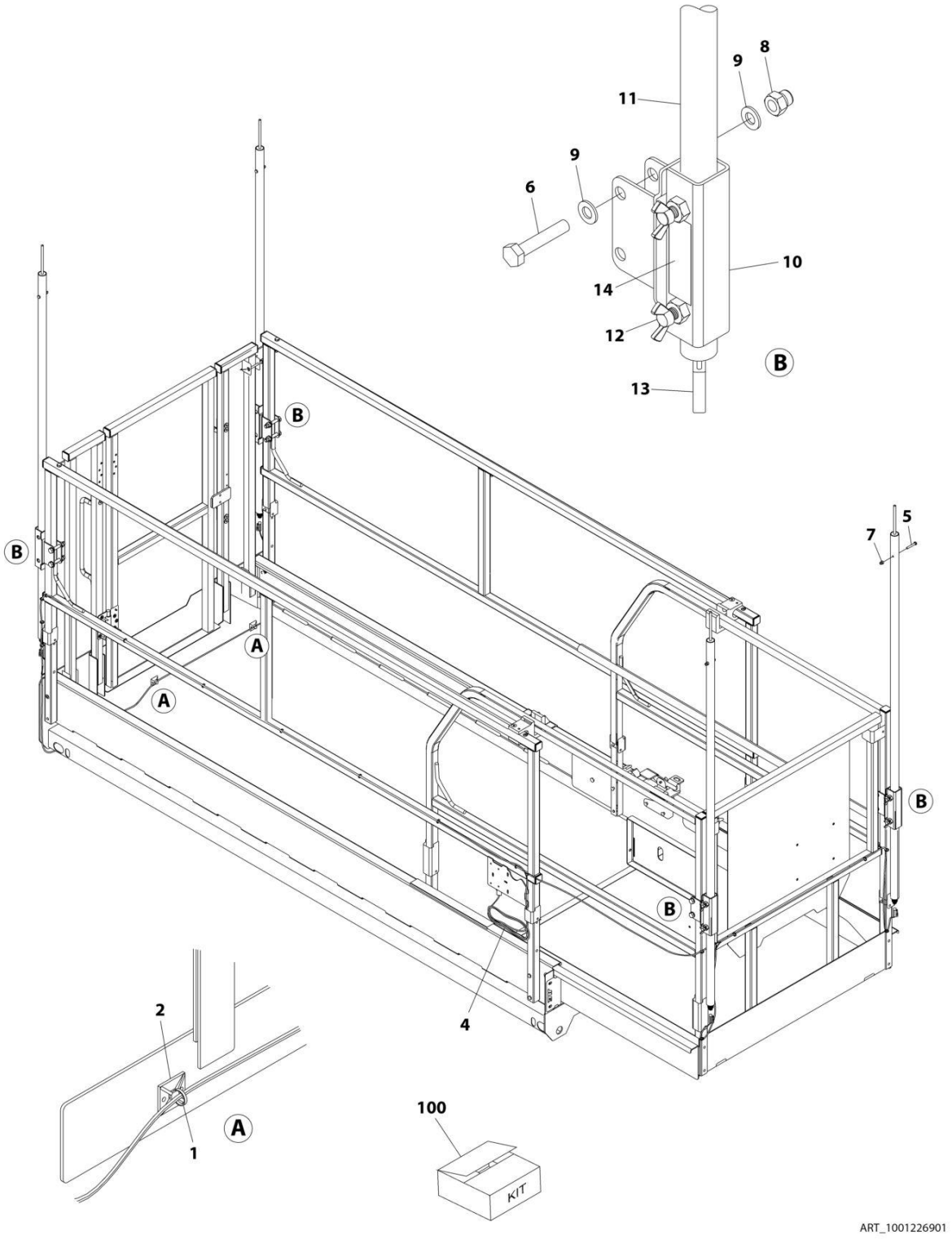

https://truckmanualshub.com/

FIGURE 4-15. OVERHEAD PROTECTION INSTALLATION (KOREAN SPECS)

ITEM	PART NUMBER	QTY	DESCRIPTION	REV
	1001226901	Ref	OVERHEAD PROTECTION INSTALLATION (KOREAN SPECS)	A
1	4240017	AR	Tie-Strap	
2	4460234	2	Mount, Tie-Strap	
4	1001227728	1	Overhead Protection Harness	A
4	4460891	4	Plug, Male - 2 Position (X503-X506)	
4	4460465	8	Socket, Female	
4	4460536	1	Receptacle, Female - 3 Position (X507)	
4	4460464	2	Pin, Male	
4	4460466	1	Plug, Terminal	
5	0700616	4	Bolt M6 x 40	
6	0701019	8	Bolt M10 x 55	
7	3290606	4	Nut M6	
8	3291006	8	Nut M10	
9	4812000	16	Washer M10	
10	1001221275	4	Bracket	
11	1001221276	4	Tube	
12	1001222914	8	Thumb Screw	
13	1001226277	4	Switch, Overhead Protection	
14	1001228184	1	Decal - Overhaed Protection Weight	
100	1001221244	1	Overhead Protection Kit (Includes Items 5-14)	

https://truckmanualshub.com/

https://truckmanualshub.com/

SECTION 5 - CYLINDER

https://truckmanualshub.com/

FIGURE 5-1. LIFT CYLINDER ASSEMBLY - LOWER

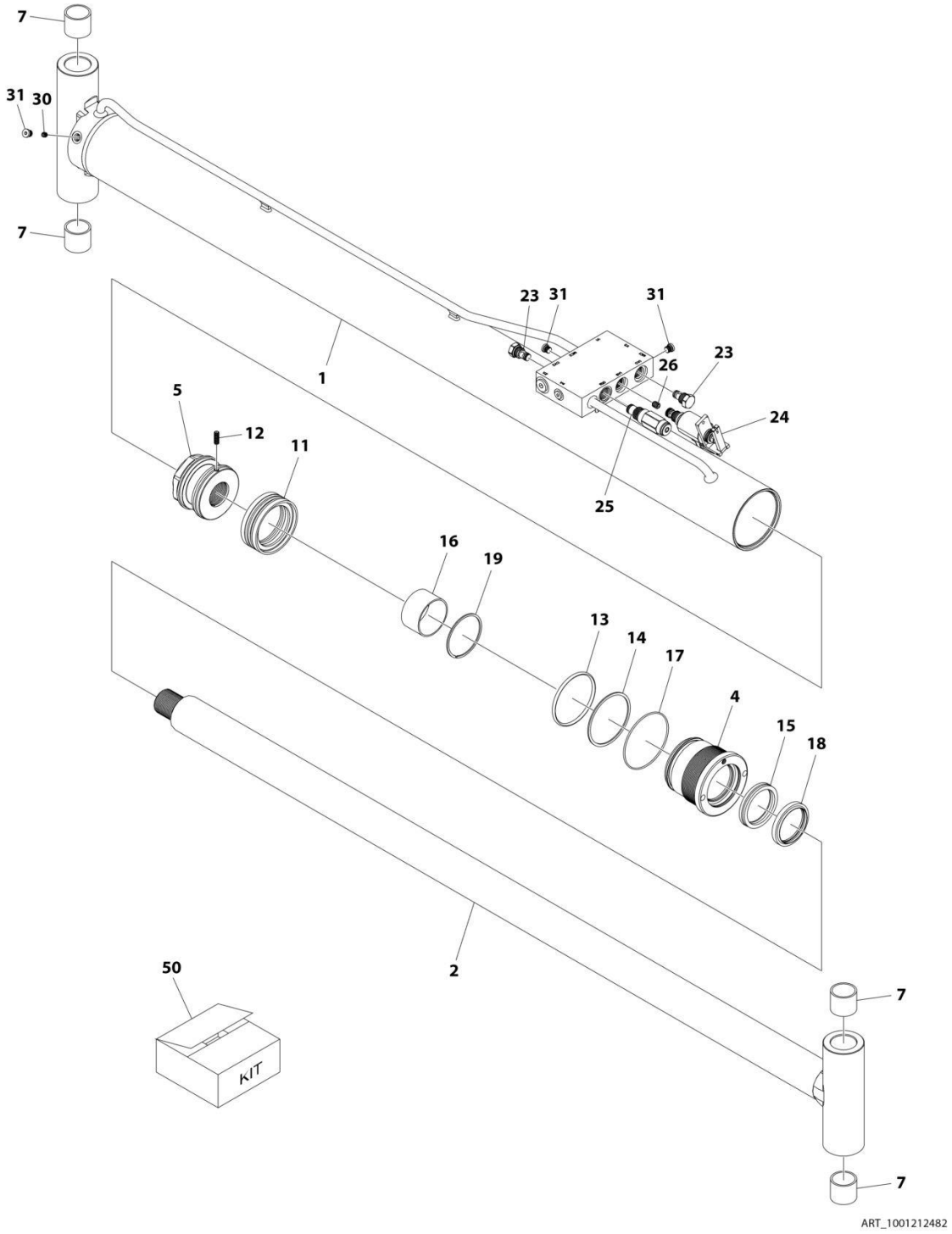

https://truckmanualshub.com/

FIGURE 5-1. LIFT CYLINDER ASSEMBLY - LOWER

ITEM	PART NUMBER	QTY	DESCRIPTION	REV
	1001212482	Ref	LIFT CYLINDER ASSEMBLY - LOWER	G
1	70006316	1	Barrel	
2	70006317	1	Rod	
4	70006318	1	Head	
5	70000764	1	Piston	
7	0962272	4	Bushing	
11	See Note	NSS	Seal, Piston (Note: Use Item 50)	
12	70006319	1	Setscrew	
13	See Note	NSS	O-Ring (Note: Use Item 50)	
14	See Note	NSS	Ring, Back-up (Note: Use Item 50)	
15	See Note	NSS	Seal, Rod (Note: Use Item 50)	
16	70006320	1	Spacer	
17	See Note	NSS	O-Ring (Note: Use Item 50)	
18	See Note	NSS	Wiper (Note: Use Item 50)	
19	70006321	1	Ring, Retaining	
23	7012955	2	Valve, Check	
23	7012967	2	Seal Kit - 7012955 Valve	
24	70005236	1	Solenoid Valve Assembly (Note: Sold as Assembly Only)	
25	70006325	1	Valve, Relief	
25	7017496	1	Seal Kit - 70006325 Valve	
26	70006322	1	Orifice	
30	70006323	1	Orifice	
31	70025619	3	Plug	
50	70005664	1	Seal Kit - 1001212482 Cylinder (Includes Items 11,13,14,15,17 & 18)	

https://truckmanualshub.com/

FIGURE 5-2. LIFT CYLINDER ASSEMBLY - UPPER

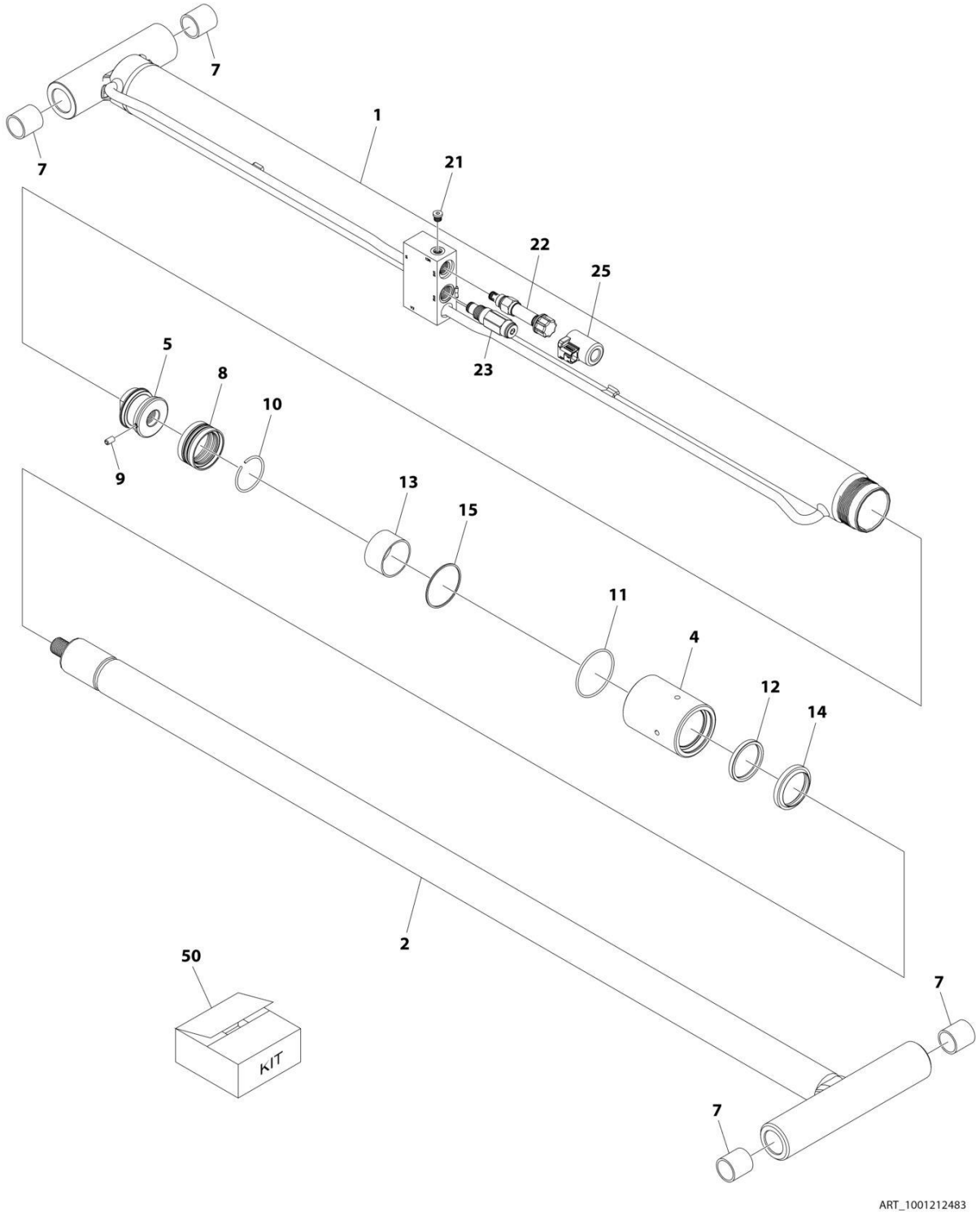

https://truckmanualshub.com/

FIGURE 5-2. LIFT CYLINDER ASSEMBLY - UPPER

ITEM	PART NUMBER	QTY	DESCRIPTION	REV
	1001212483	Ref	LIFT CYLINDER ASSEMBLY - UPPER	I
1	70006326	1	Barrel	
2	70006327	1	Rod	
4	70006328	1	Head	
5	70006329	1	Piston	
7	0440267	4	Bushing	
8	See Note	NSS	Seal, Piston (Note: Use Item 50)	
9	70025605	1	Setscrew	
10	70006330	1	Ring, Retaining	
11	See Note	NSS	O-Ring (Note: Use Item 50)	
12	See Note	NSS	Seal, Rod (Note: Use Item 50)	
13	70006331	1	Spacer	
14	See Note	NSS	Wiper (Note: Use Item 50)	
15	70025627	1	Ring, Retaining	
21	70025619	3	Plug	
22	70006333	1	Cartridge, Solenoid Less Coil	
22	70006334	1	Seal Kit - 70006333 Valve	
23	70006325	1	Valve, Relief	
23	7017496	1	Seal Kit - 70006325 Valve	
25	70006335	1	Coil	
50	70005665	1	Seal Kit - 1001212483 Cylinder (Includes Items 8,11,12 & 14)	

https://truckmanualshub.com/

FIGURE 5-3. STEER CYLINDER ASSEMBLY

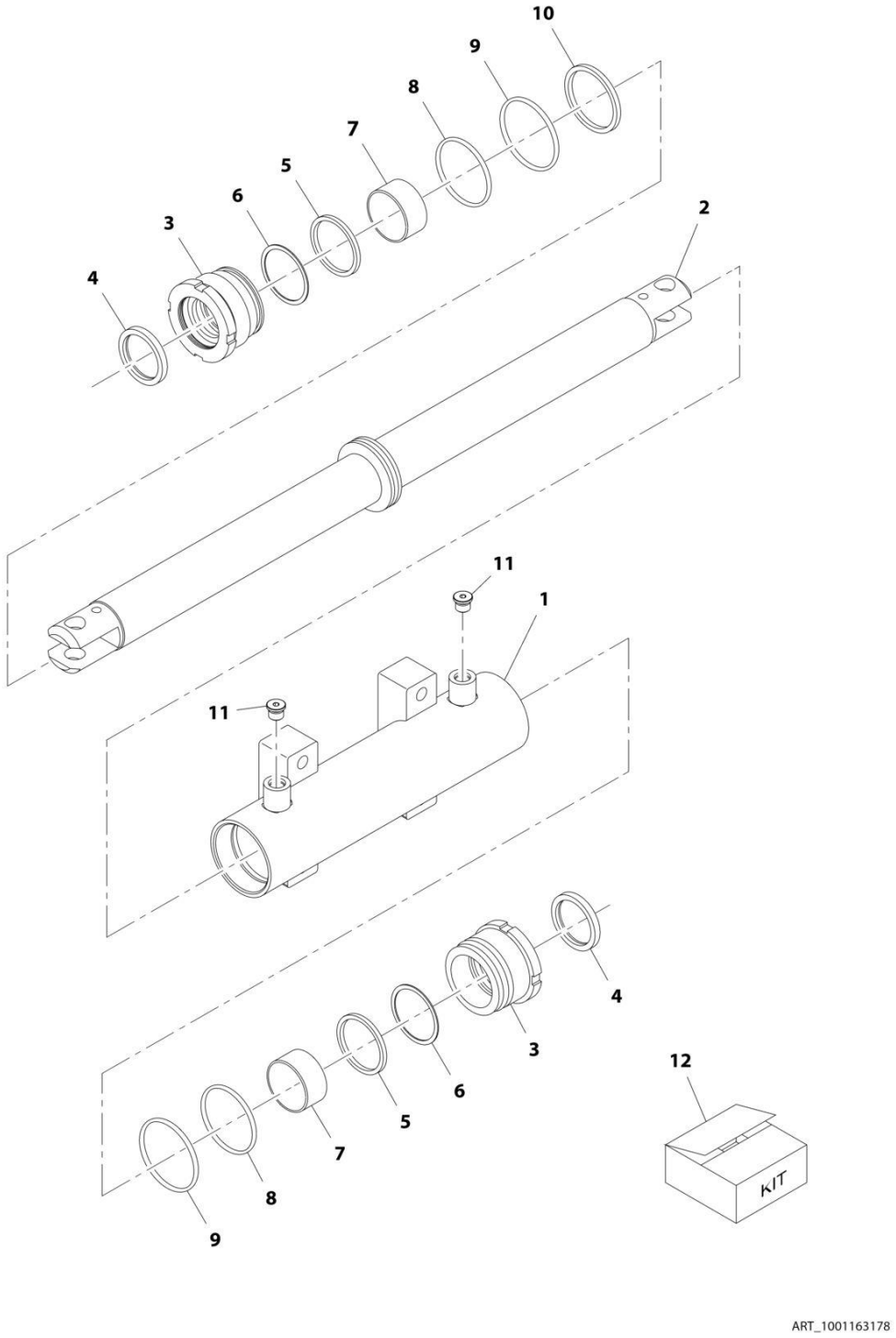

https://truckmanualshub.com/

FIGURE 5-3. STEER CYLINDER ASSEMBLY

ITEM	PART NUMBER	QTY	DESCRIPTION	REV
	1001163178	Ref	STEER CYLINDER ASSEMBLY	D
1	70005150	1	Barrel	
2	70005151	1	Rod	
3	70005152	2	Head	
4	See Note	NSS	Wiper (Note: Use Item 12)	
5	See Note	NSS	Seal, Rod (Note: Use Item 12)	
6	See Note	NSS	Ring, Back-up (Note: Use Item 12)	
7	70005153	2	Bearing, Dry	
8	See Note	NSS	O-Ring (Note: Use Item 12)	
9	See Note	NSS	O-Ring (Note: Use Item 12)	
10	See Note	NSS	Seal, Piston (Note: Use Item 12)	
11	See Note	2	Plug 9/16 (Note: Not Available for Purchase)	
12	70005154	1	Seal Kit - 1001163178 Cylinder (Includes Items 4-6 & 8-10)	

https://truckmanualshub.com/

https://truckmanualshub.com/

SECTION 6 - HYDRAULIC

https://truckmanualshub.com/

FIGURE 6-1. HYDRAULIC COMPONENTS INSTALLATION

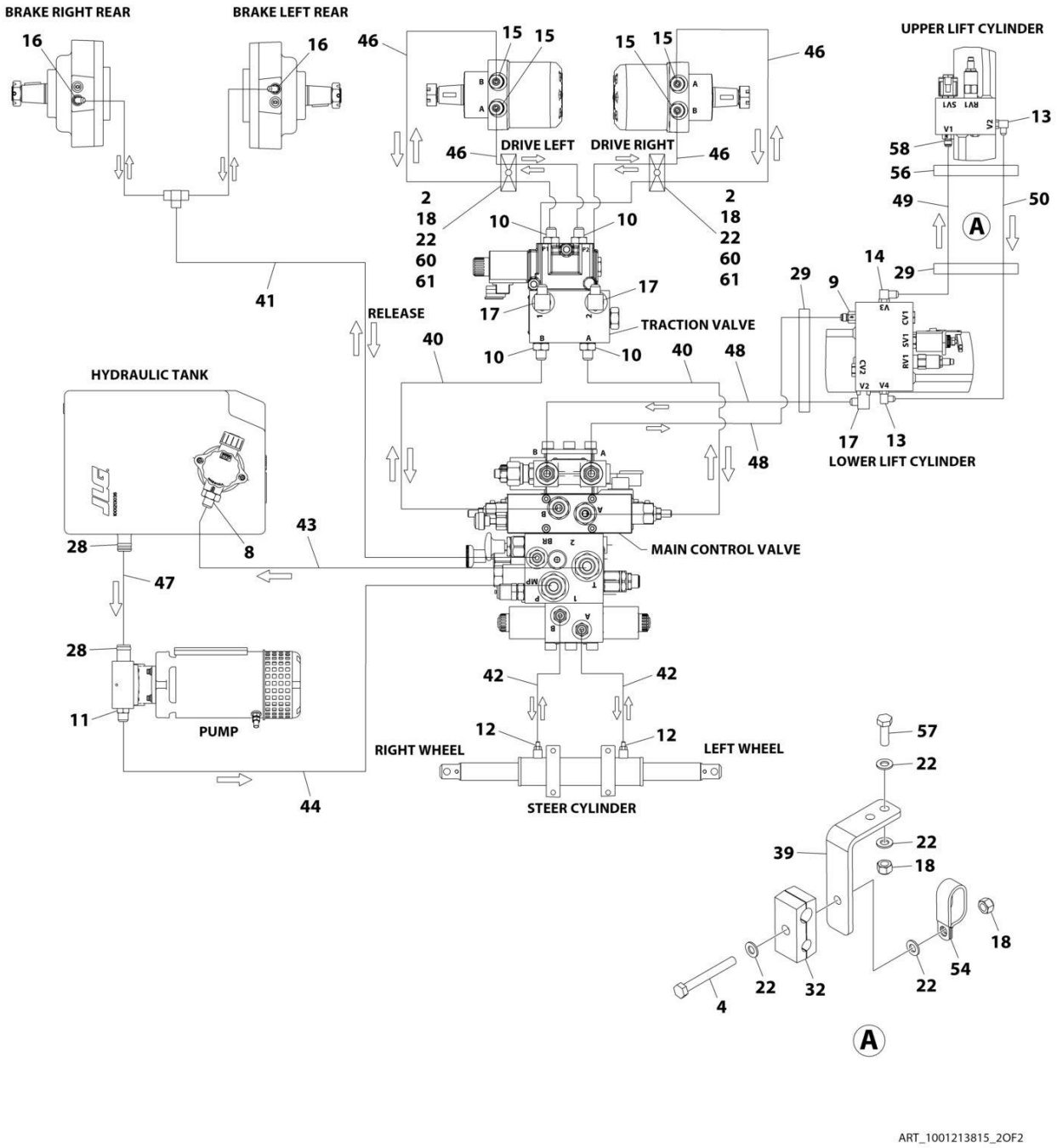

https://truckmanualshub.com/

FIGURE 6-1. HYDRAULIC COMPONENTS INSTALLATION

ITEM	PART NUMBER	QTY	DESCRIPTION	REV
	1001213815	Ref	HYDRAULIC COMPONENTS INSTALLATION	J
2	0760818	2	Bolt M8 x 50 **(Prior to SN B200046105, Prior to SN 0200267008)**	
	0700819	AR	Bolt M8 x 55 **(SN B200046105 to Present, SN 0200267008 to Present)**	
4	0760822	1	Bolt M8 x 70	
8	2220346	1	Fitting, Straight JIC/NPT	
9	4640780	1	Valve, Cartridge - Check	
10	2220372	4	Fitting, Straight JIC/ORB	
11	2220373	1	Fitting, Straight JIC/ORB	
12	2220582	2	Fitting, Straight JIC/ORB	
13	2220466	2	Fitting, 90 JIC/ORB	
14	2220473	1	Fitting, 90 JIC/ORB	
15	2220497	4	Fitting, Straight JIC/ORB	
16	2220502	2	Fitting, 45 JIC/ORB	
17	2220628	3	Fitting, 90 JIC/ORB	
18	3290805	AR	Nut M8	
20	4240018	AR	Tie-Strap (Not Shown)	
22	4811900	AR	Washer M8	
26	77133139	2	Clamp Set **(Prior to SN B200052413, Prior to SN 0200268630)**	
28	1001143501	2	Clamp	
29	1001143645	3	Strap, Cinch	
32	1001209953	NLA	Clamp (Use p/n 1001243109) **(Prior to SN B200052413, Prior to SN 0200268630)**	
32	1001243109	1	Clamp **(SN B200052413 to Present, SN 0200268630 to Present)**	
39	1001217386	1	Bracket	
40	1001218159	2	Hose	
41	1001218160	1	Hose	
42	1001218161	2	Hose	
43	1001218162	1	Hose	
44	1001218163	1	Hose	
46	1001218165	4	Hose	
47	1001218167	1	Hose	
48	1001218168	2	Hose	
49	1001218169	1	Hose	
50	1001218170	1	Hose	
54	1321283	1	Clamp	
56	1001137263	2	Strap, Cinch	
57	0700812	2	Bolt M8 x 25	
58	2220371	1	Fitting, Straight JIC/ORB	
60	1320187	2	Clamp, Twin **(SN B200052413 to Present, SN 0200268630 to Present)**	
61	1321752	2	Clamp, Top Plate **(SN B200052413 to Present, SN 0200268630 to Present)**	

https://truckmanualshub.com/

https://truckmanualshub.com/

SECTION 7 - ELECTRICAL

https://truckmanualshub.com/

FIGURE 7-1. AC BOX AT PLATFORM INSTALLATION - 110V GFI (ALL SPECS EXCEPT AUSTRALIAN & CE SPECS)

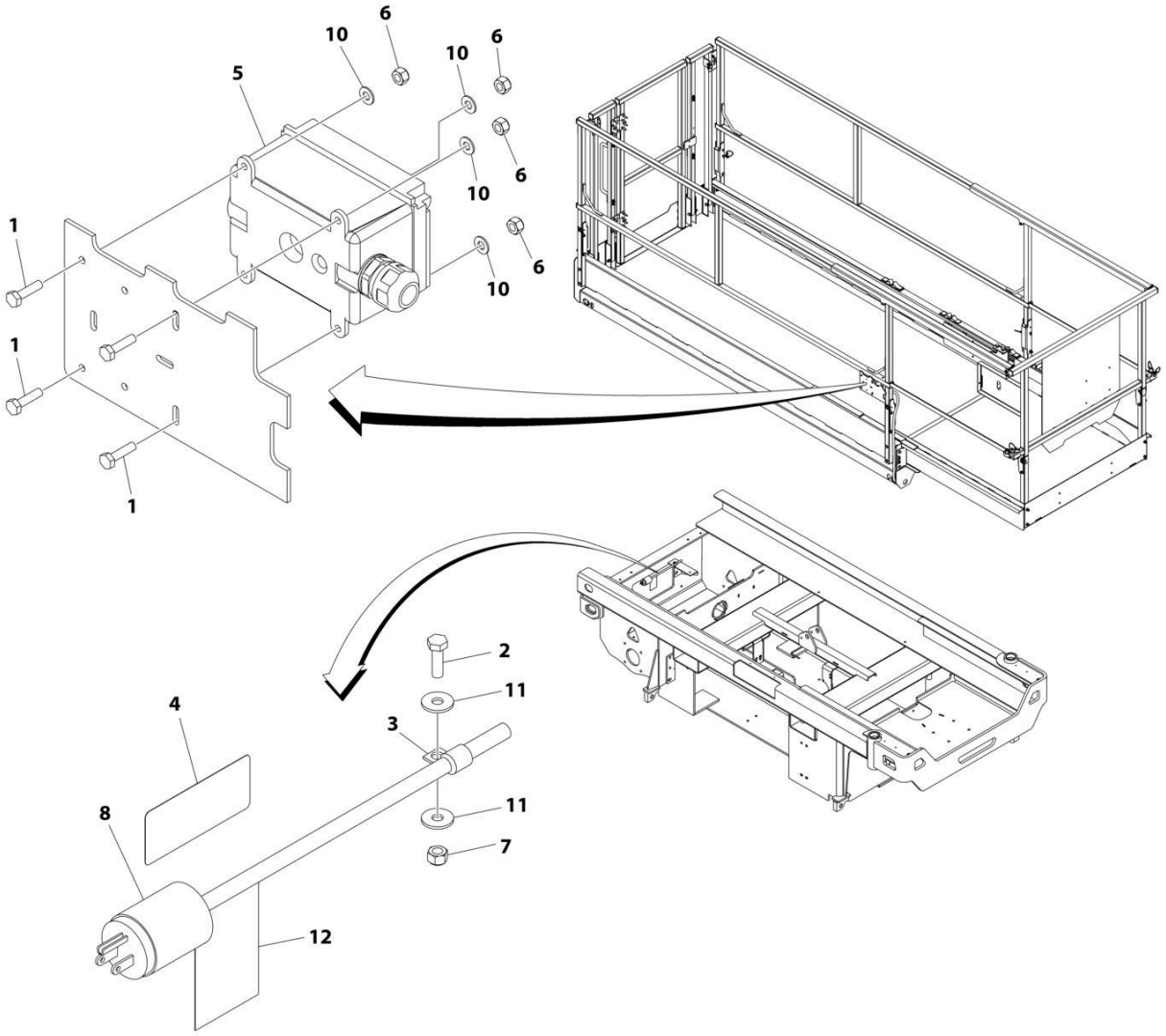

https://truckmanualshub.com/

FIGURE 7-1. AC BOX AT PLATFORM INSTALLATION - 110V GFI (ALL SPECS EXCEPT AUSTRALIAN & CE SPECS)

ITEM	PART NUMBER	QTY	DESCRIPTION	REV
	1001214446	Ref	AC BOX AT PLATFORM INSTALLATION - 110V GFI (ALL SPECS EXCEPT AUSTRALIAN & CE SPECS)	A
1	0760408	4	Bolt M4 x 16	
2	0760610	1	Bolt M6 x 20	
3	1321293	1	Clamp	
4	1703464	1	Decal - AC Power	
5	2902431	1	Receptacle Box Kit (See Separate Breakdown in this Section)	
6	3290405	4	Nut M4	
7	3290605	1	Nut M6	
8	4460138	1	Plug, Male - AC	
9	4460315	1	Terminal (Not Shown)	
10	4811400	4	Washer M4	
11	4811702	2	Washer M6	
12	1001102258	1	Decal - AC Label	

https://truckmanualshub.com/

FIGURE 7-2. AC BOX AT PLATFORM INSTALLATION - 110V IEC YELLOW (CE SPECS)

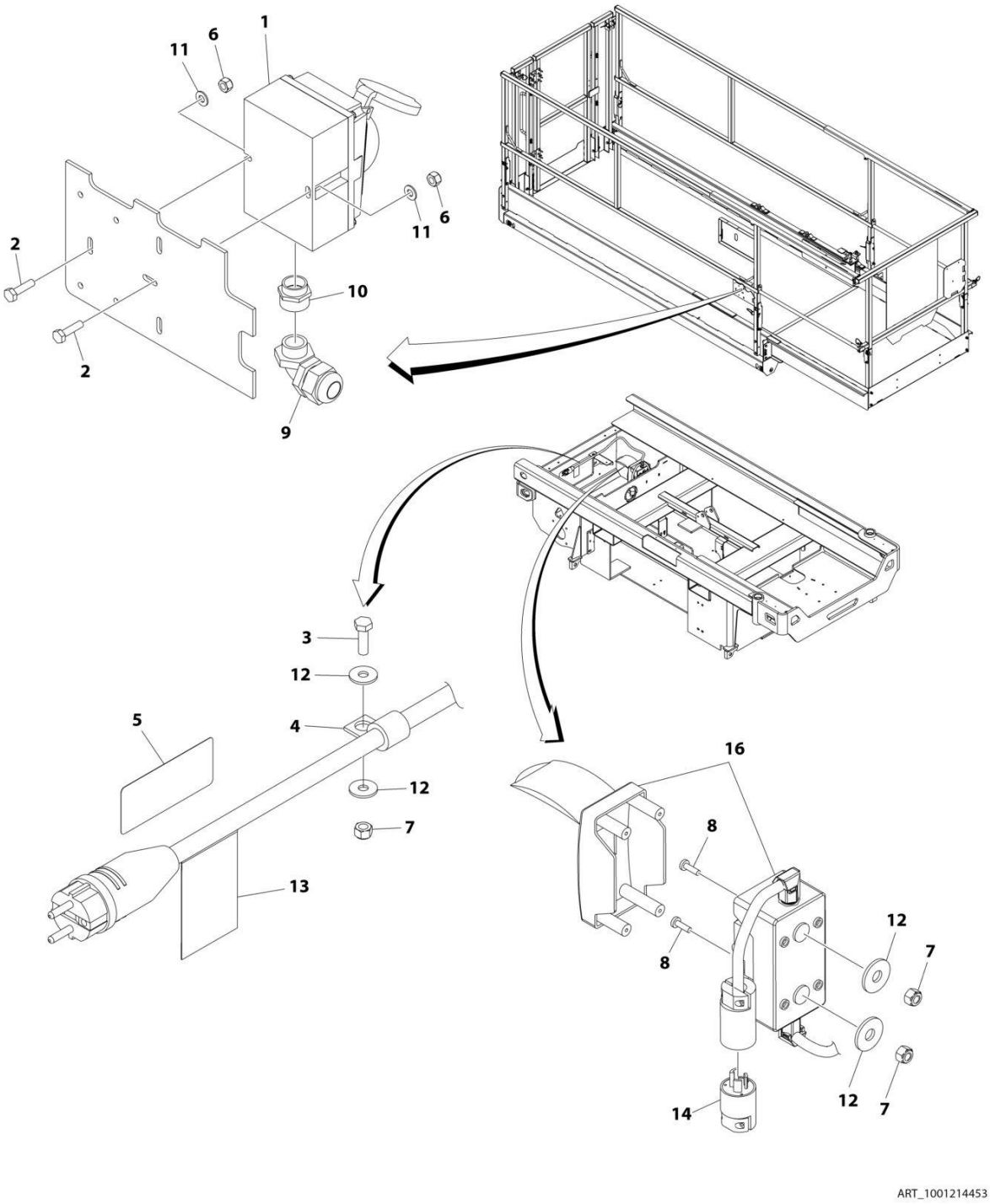

https://truckmanualshub.com/

FIGURE 7-2. AC BOX AT PLATFORM INSTALLATION - 110V IEC YELLOW (CE SPECS)

ITEM	PART NUMBER	QTY	DESCRIPTION	REV
	1001214453	Ref	AC BOX AT PLATFORM INSTALLATION - 110V IEC YELLOW (CE SPECS)	B
1	0275216	1	Receptacle Box Kit - 110V IEC Yellow (See Separate Breakdown in this Section)	
2	0760408	2	Bolt M4 x 16	
3	0760610	1	Bolt M6 x 20	
4	1321293	1	Clamp	
5	1703464	1	Decal - AC Power	
6	3290405	2	Nut M4	
7	3290605	3	Nut M6	
8	4010610	2	Screw M6 x 20	
9	4461257	1	Connector, Strain Relief	
10	4461258	1	Connector, Adapter	
11	4811400	2	Washer M4	
12	4811702	4	Washer M6	
13	1001102258	1	Decal - AC Label	
14	1001120204	1	Plug, Male Twist	
16	1001219041	1	Breaker Box Kit (See Separate Breakdown in this Section)	

https://truckmanualshub.com/

FIGURE 7-3. AC BOX AT PLATFORM INSTALLATION - 220V IEC BLUE (CE SPECS)

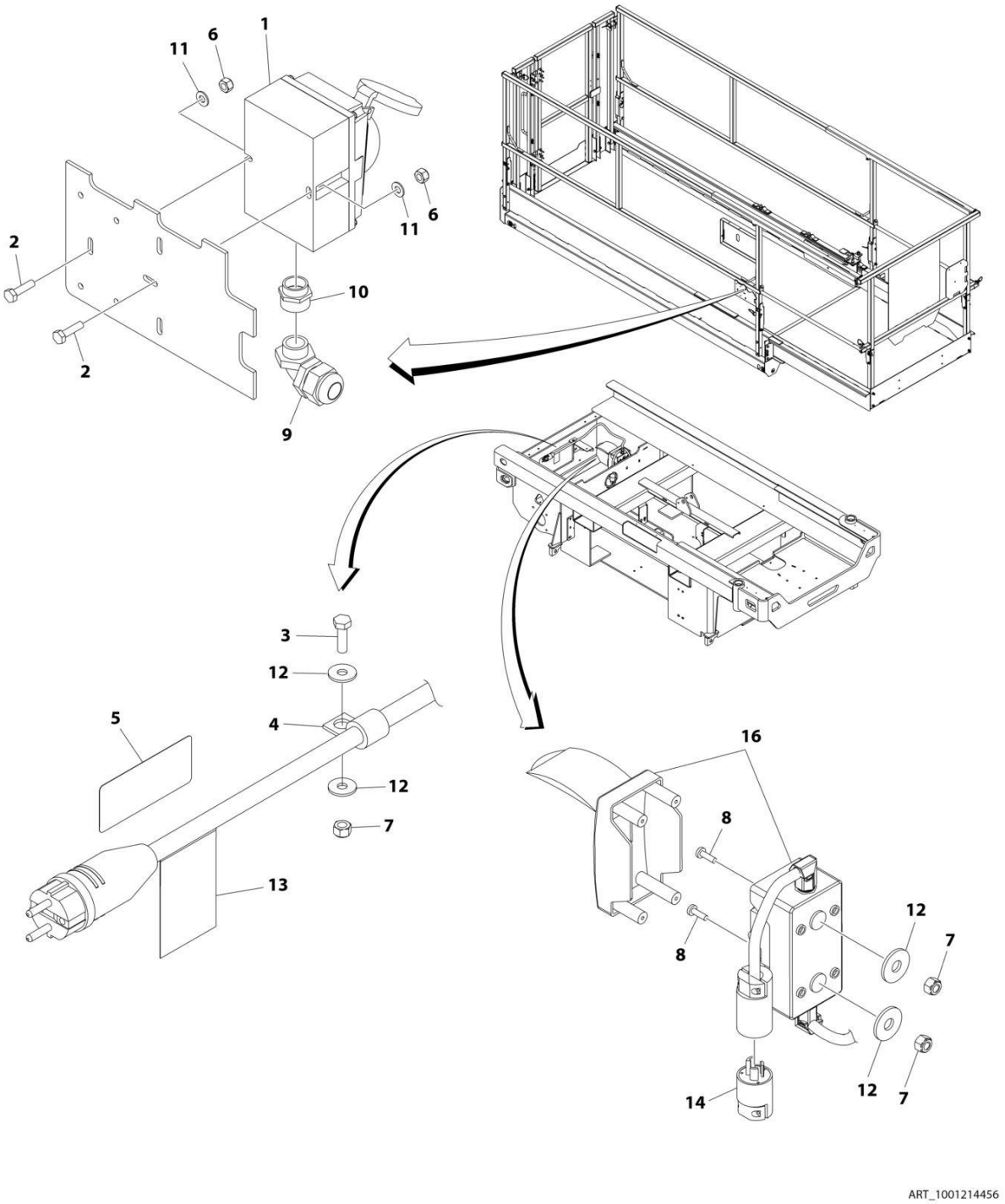

https://truckmanualshub.com/

FIGURE 7-3. AC BOX AT PLATFORM INSTALLATION - 220V IEC BLUE (CE SPECS)

ITEM	PART NUMBER	QTY	DESCRIPTION	REV
	1001214456	Ref	AC BOX AT PLATFORM INSTALLATION - 220V IEC BLUE (CE SPECS)	B
1	0275217	1	Receptacle Box Kit - 220V IEC Blue (See Separate Breakdown in this Section)	
2	0760408	2	Bolt M4 x 16	
3	0760610	1	Bolt M6 x 20	
4	1321293	1	Clamp	
5	3252507	1	Decal - AC Power	
6	3290405	2	Nut M4	
7	3290605	3	Nut M6	
8	4010610	2	Screw M6 x 20	
9	4461257	1	Connector, Strain Relief	
10	4461258	1	Connector, Adapter	
11	4811400	2	Washer M4	
12	4811702	4	Washer M6	
13	1001102258	1	Decal - AC Label	
14	1001120204	1	Plug, Male Twist	
16	1001219041	1	Breaker Box Kit (See Separate Breakdown in this Section)	

https://truckmanualshub.com/

FIGURE 7-4. AC BOX AT PLATFORM INSTALLATION - 220V CEE7 POST GROUND (CE SPECS)

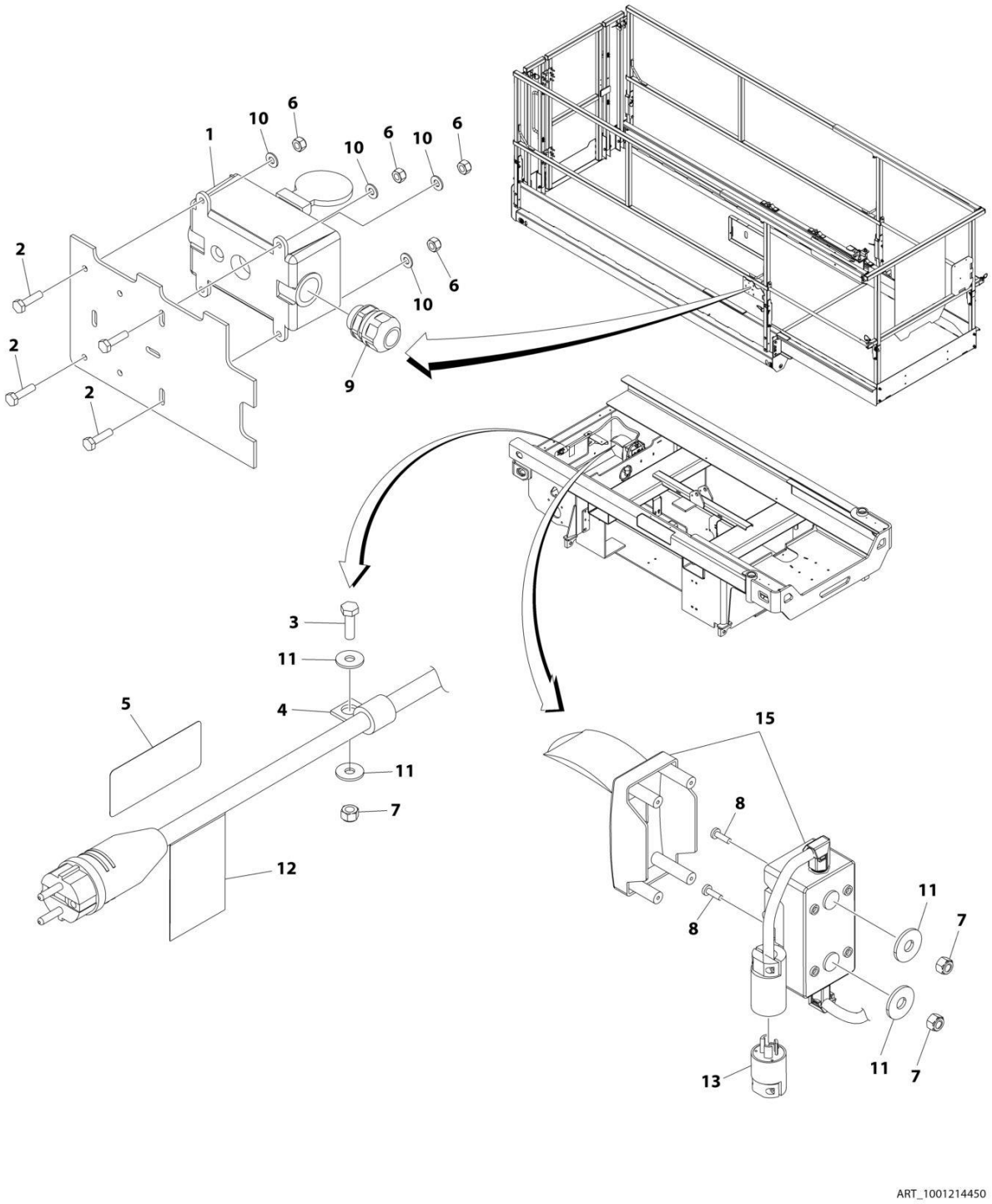

https://truckmanualshub.com/

FIGURE 7-4. AC BOX AT PLATFORM INSTALLATION - 220V CEE7 POST GROUND (CE SPECS)

ITEM	PART NUMBER	QTY	DESCRIPTION	REV
	1001214450	Ref	AC BOX AT PLATFORM INSTALLATION - 220V CEE7 POST GROUND (CE SPECS)	B
1	0275452	1	Receptacle Box Kit - 220V CEE7 Post Ground (See Separate Breakdown in this Section)	
2	0760408	4	Bolt M4 x 16	
3	0760610	1	Bolt M6 x 20	
4	1321293	1	Clamp	
5	3252507	1	Decal - AC Power	
6	3290405	4	Nut M4	
7	3290605	3	Nut M6	
8	4010610	2	Screw M6 x 20	
9	4460662	1	Connector, Strain Relief	
10	4811400	4	Washer M4	
11	4811702	4	Washer M6	
12	1001102258	1	Decal - AC Label	
13	1001120204	1	Plug, Male Twist	
15	1001219018	1	Breaker Box Kit (See Separate Breakdown in this Section)	

https://truckmanualshub.com/

FIGURE 7-5. AC BOX AT PLATFORM INSTALLATION - 220V CEE7 SIDE GROUND (CE SPECS)

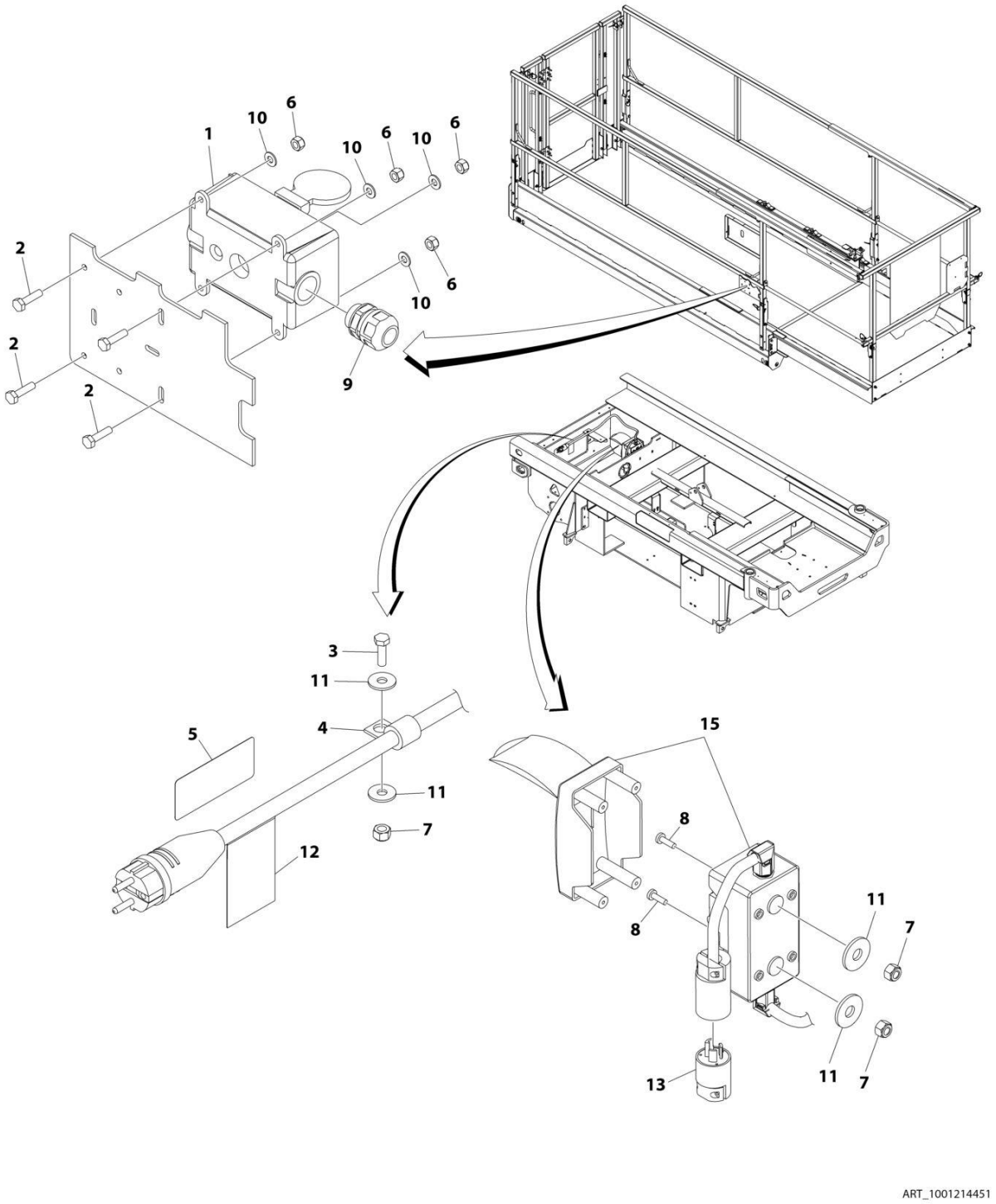

https://truckmanualshub.com/

FIGURE 7-5. AC BOX AT PLATFORM INSTALLATION - 220V CEE7 SIDE GROUND (CE SPECS)

ITEM	PART NUMBER	QTY	DESCRIPTION	REV
	1001214451	Ref	AC BOX AT PLATFORM INSTALLATION - 220V CEE7 SIDE GROUND (CE SPECS)	B
1	0275453	1	Receptacle Box Kit - 220V CEE7 Side Ground (See Separate Breakdown in this Section)	
2	0760408	4	Bolt M4 x 16	
3	0760610	1	Bolt M6 x 20	
4	1321293	1	Clamp	
5	3252507	1	Decal - AC Power	
6	3290405	4	Nut M4	
7	3290605	3	Nut M6	
8	4010610	2	Screw M6 x 20	
9	4460662	1	Connector, Strain Relief	
10	4811400	4	Washer M4	
11	4811702	4	Washer M6	
12	1001102258	1	Decal - AC Label	
13	1001120204	1	Plug, Male Twist	
15	1001209018	1	Breaker Box Kit (See Separate Breakdown in this Section)	

https://truckmanualshub.com/

FIGURE 7-6. AC BOX AT PLATFORM INSTALLATION - 220V AFSINT 107 (CE SPECS)

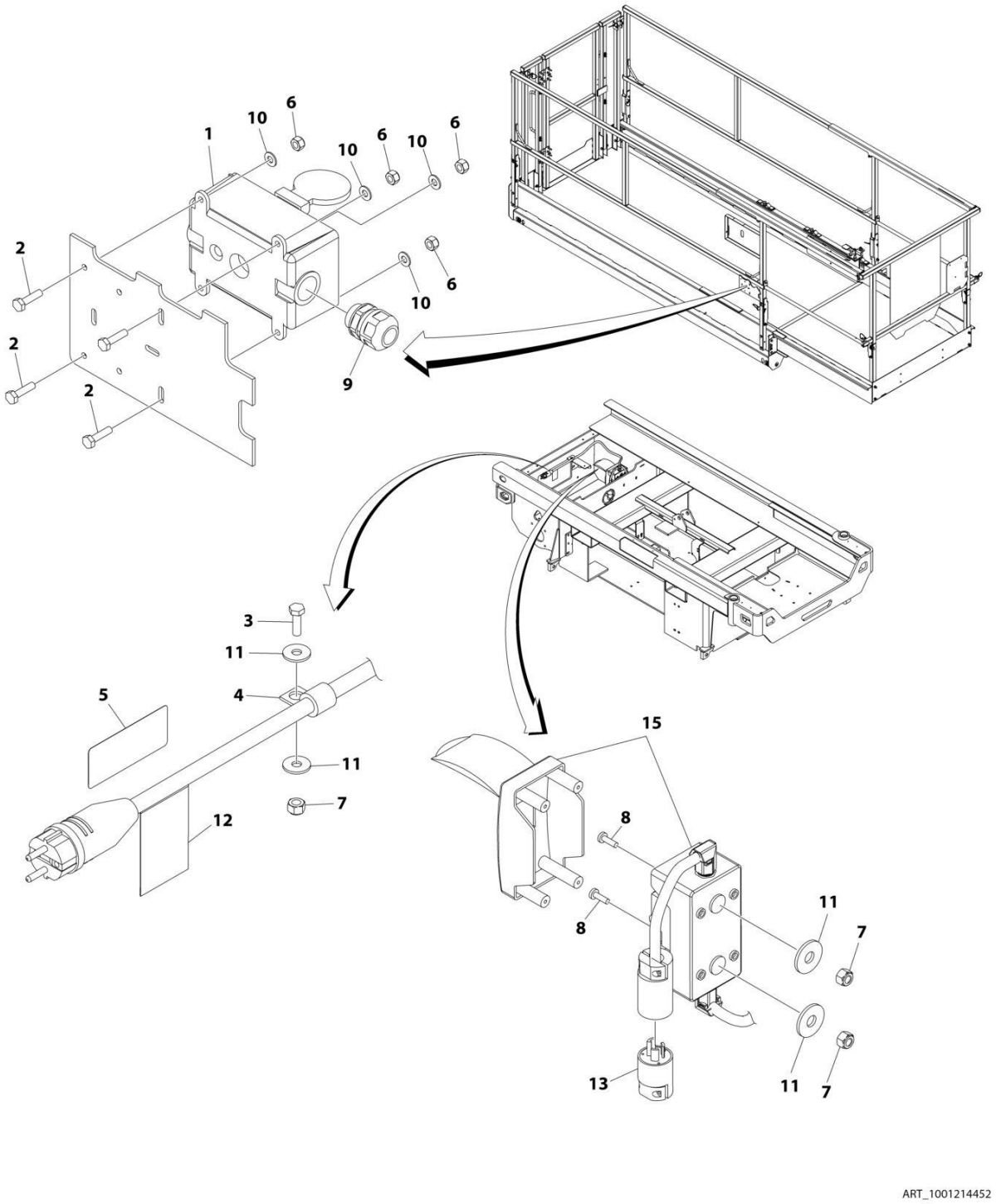

https://truckmanualshub.com/

FIGURE 7-6. AC BOX AT PLATFORM INSTALLATION - 220V AFSINT 107 (CE SPECS)

ITEM	PART NUMBER	QTY	DESCRIPTION	REV
	1001214452	Ref	AC BOX AT PLATFORM INSTALLATION - 220V AFSINT 107 (CE SPECS)	B
1	0275454	1	Receptacle Box Kit - 220V AFSINT 107 (See Separate Breakdown in this Section)	
2	0760408	4	Bolt M4 x 16	
3	0760610	1	Bolt M6 x 20	
4	1321293	1	Clamp	
5	3252507	1	Decal - AC Power	
6	3290405	4	Nut M4	
7	3290605	3	Nut M6	
8	4010610	2	Screw M6 x 20	
9	4460662	1	Connector, Strain Relief	
10	4811400	4	Washer M4	
11	4811702	4	Washer M6	
12	1001102258	1	Decal - AC Label	
13	1001120204	1	Plug, Male Twist	
15	1001219041	1	Breaker Box Kit (See Separate Breakdown in this Section)	

https://truckmanualshub.com/

FIGURE 7-7. AC BOX AT PLATFORM INSTALLATION - 220V CHINA PLUG (CHINA SPECS)

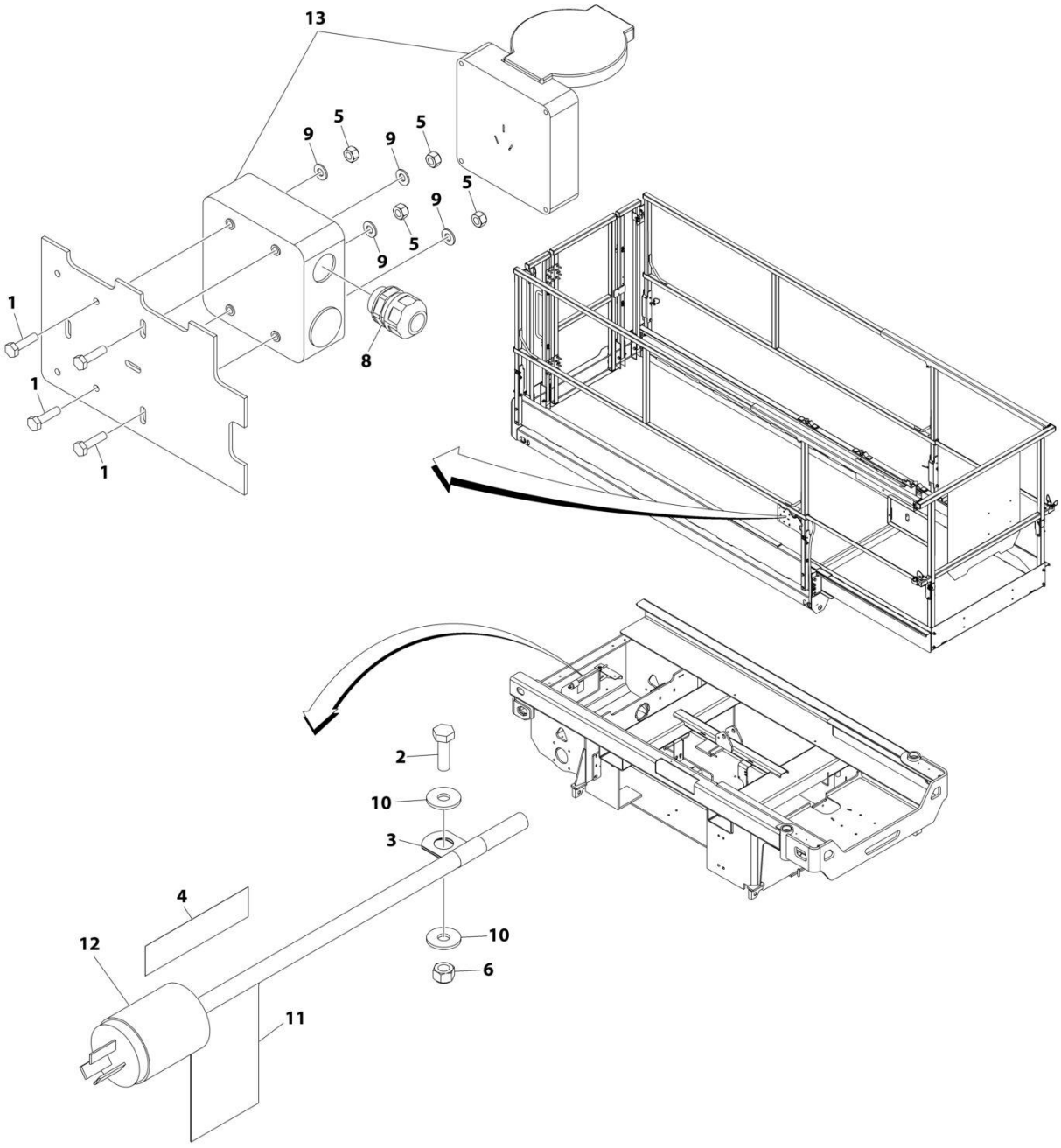

https://truckmanualshub.com/

FIGURE 7-7. AC BOX AT PLATFORM INSTALLATION - 220V CHINA PLUG (CHINA SPECS)

ITEM	PART NUMBER	QTY	DESCRIPTION	REV
	1001214457	Ref	AC BOX AT PLATFORM INSTALLATION - 220V CHINA PLUG (CHINA SPECS)	A
1	0760408	4	Bolt M4 x 16	
2	0760610	1	Bolt M6 x 20	
3	8406003	1	Clamp	
4	3252507	1	Decal - 220 Volt	
5	3290405	4	Nut M4	
6	3290605	1	Nut M6	
7	4460315	1	Terminal (Not Shown)	
8	4460968	1	Connector, Strain Relief	
9	4811400	4	Washer M4	
10	4811702	2	Washer M6	
11	1001102258	1	Decal - AC Label	
12	1001187816	1	Plug	
13	1001188116	1	Box	

https://truckmanualshub.com/

FIGURE 7-8. AC BOX AT PLATFORM INSTALLATION - 220V LOCALLY SUPPLIED COMPONENTS (ALL SPECS)

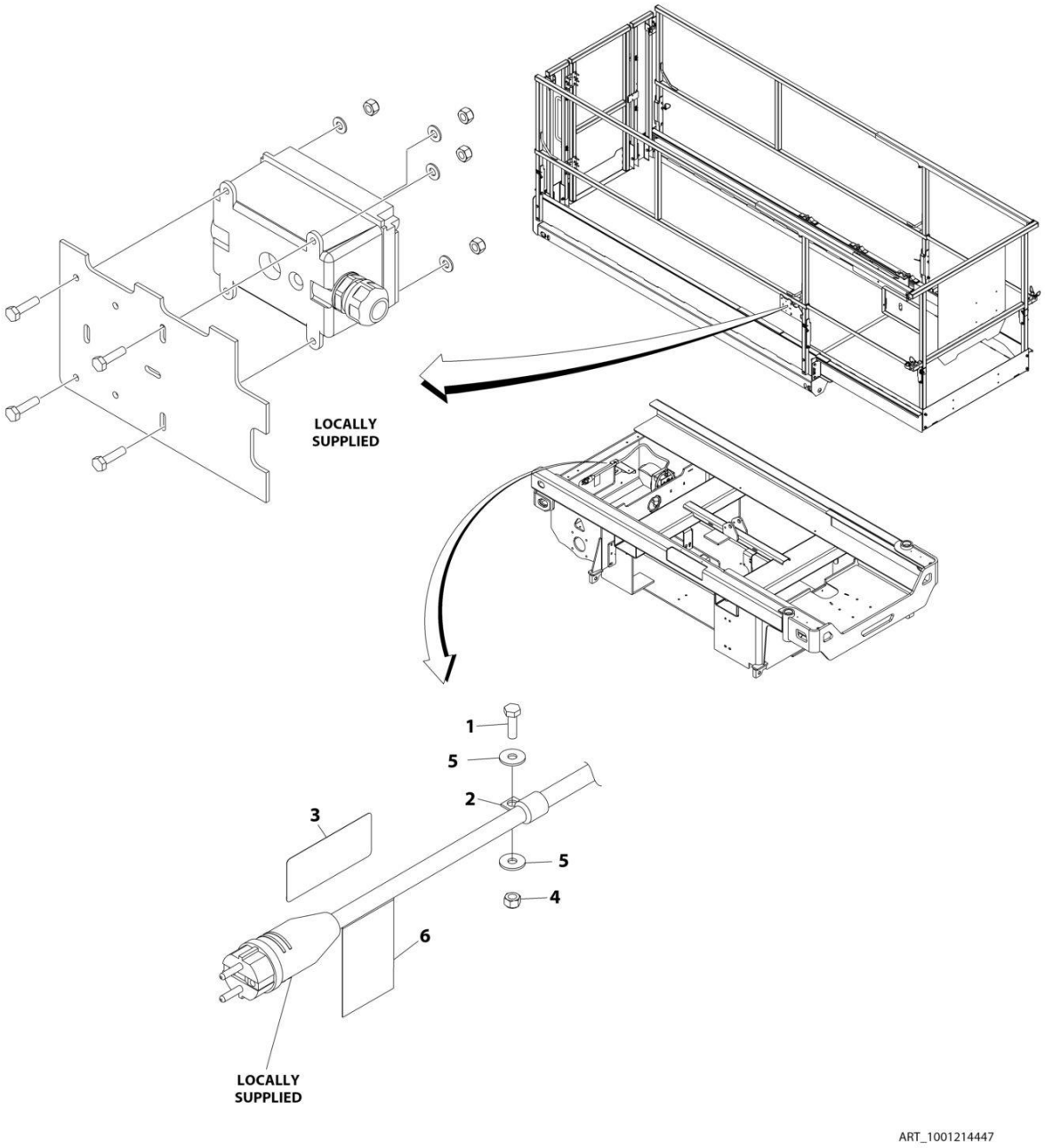

https://truckmanualshub.com/

FIGURE 7-8. AC BOX AT PLATFORM INSTALLATION - 220V LOCALLY SUPPLIED COMPONENTS (ALL SPECS)

ITEM	PART NUMBER	QTY	DESCRIPTION	REV
	1001214447	Ref	AC BOX AT PLATFORM INSTALLATION - 220V LOCALLY SUPPLIED COMPONENTS (ALL SPECS)	A
1	0760610	1	Bolt M6 x 20	
2	1321293	1	Clamp	
3	3252507	1	Decal - 220 Volt	
4	3290605	1	Nut M6	
5	4811702	2	Washer M6	
6	1001102258	1	Decal - AC Label	

https://truckmanualshub.com/

FIGURE 7-9. BREAKER BOX KIT WITH 1 DOUBLE BREAKER

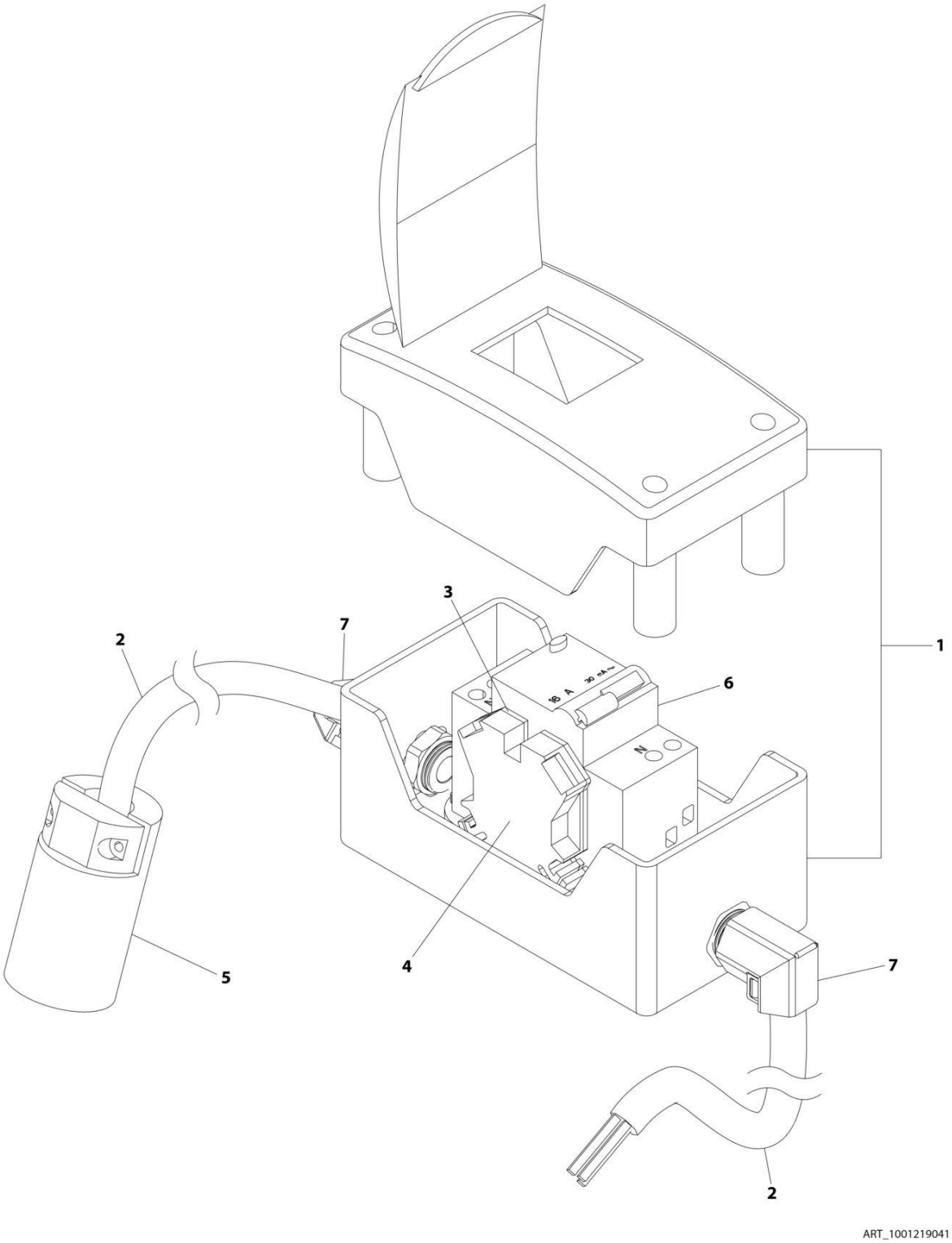

https://truckmanualshub.com/

FIGURE 7-9. BREAKER BOX KIT WITH 1 DOUBLE BREAKER

ITEM	PART NUMBER	QTY	DESCRIPTION	REV
	1001219041	Ref	BREAKER BOX KIT WITH 1 DOUBLE BREAKER	A
1	0861880	1	Box	
2	1060908	4.5 ft/ 1.3m	Cable, 12/3	
3	4460956	1	Barrier, Terminal	
4	4460957	1	Block, Terminal	
5	1001120205	1	Connector, Female Twist	
6	1001181045	1	Breaker 30mAmp/16 Amp	
7	1001217164	2	Connector, Strain Relief 90	

https://truckmanualshub.com/

FIGURE 7-10. BREAKER BOX KIT WITH 3 BREAKERS

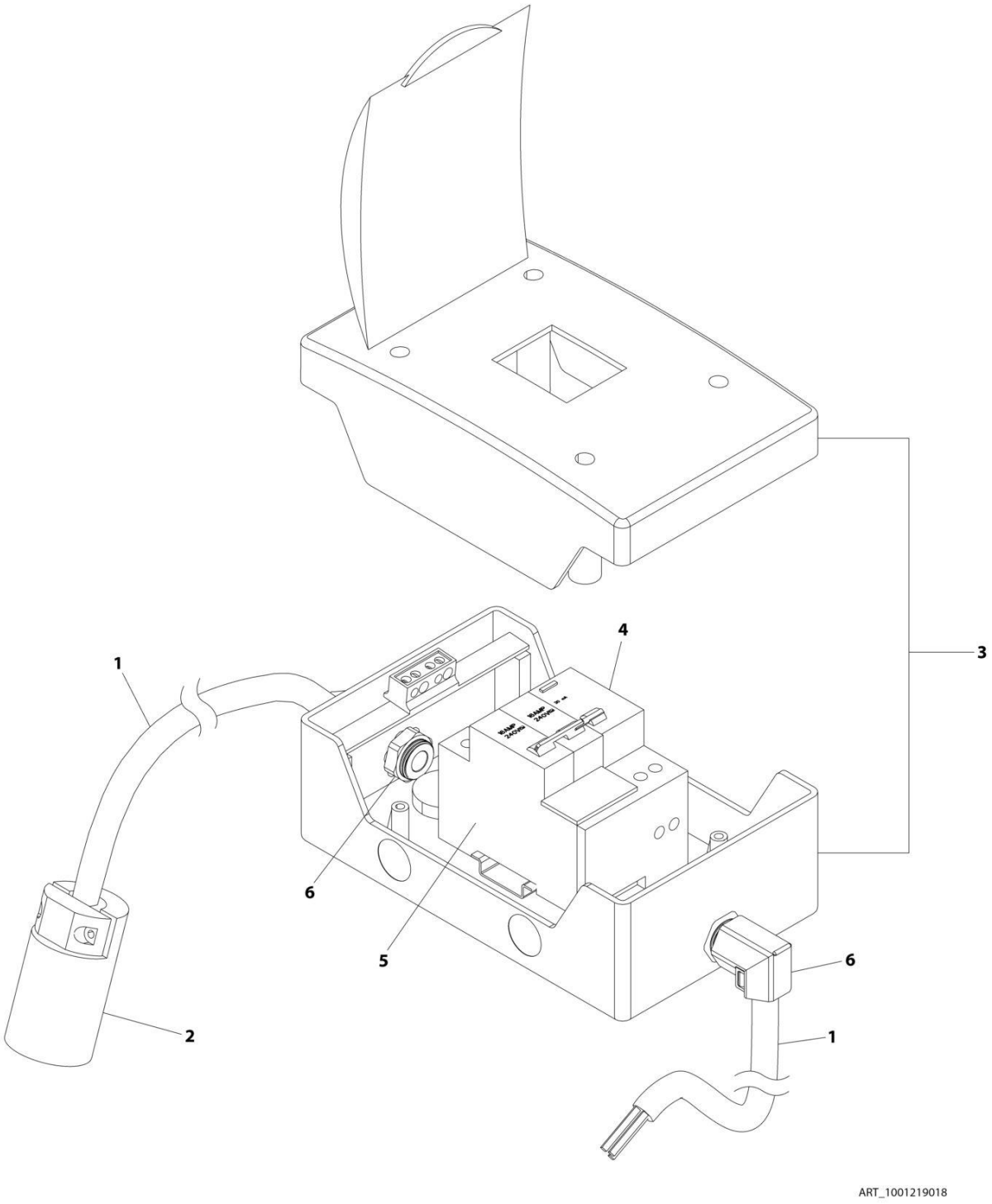

https://truckmanualshub.com/

FIGURE 7-10. BREAKER BOX KIT WITH 3 BREAKERS

ITEM	PART NUMBER	QTY	DESCRIPTION	REV
	1001219018	Ref	BREAKER BOX KIT WITH 3 BREAKERS	A
1	1060908	4.5 ft/ 1.3m	Cable, 12/3	
2	1001120205	1	Connector, Female Twist	
3	1001152483	1	Box	
4	1001189171	1	Breaker, 30mAmp	
5	1001189172	1	Breaker 16 Amp, Double	
6	1001217164	2	Connector, Strain Relief 90	

https://truckmanualshub.com/

FIGURE 7-11. CHASSIS HARNESS

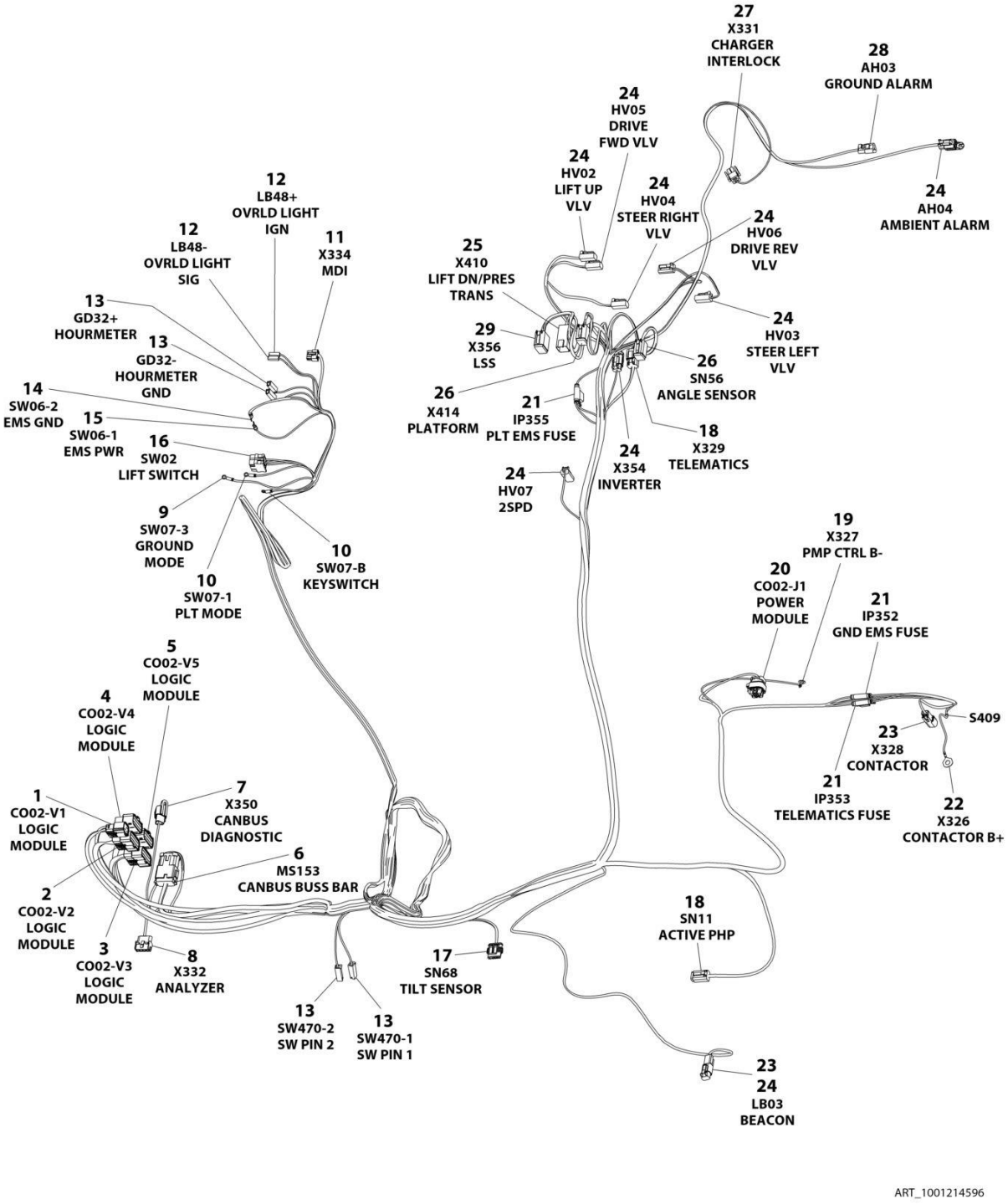

https://truckmanualshub.com/

FIGURE 7-11. CHASSIS HARNESS

ITEM	PART NUMBER	QTY	DESCRIPTION	REV
	1001214596	Ref	CHASSIS HARNESS	E
1	1001205409	1	Connector - 8 Position	
1	1001162887	6	Terminal	
1	1001163340	2	Plug, Terminal	
2	1001205410	1	Connector - 20 Position	
2	1001162887	13	Terminal	
2	1001163340	7	Plug, Terminal	
3	1001162886	1	Connector - 20 Position	
3	1001162887	14	Terminal	
3	1001163340	6	Plug, Terminal	
4	1001205411	1	Connector - 20 Position	
4	1001162887	15	Terminal	
4	1001163340	5	Plug, Terminal	
5	1001205412	1	Connector - 20 Position	
5	1001162887	18	Terminal	
5	1001163340	2	Plug, Terminal	
6	4460933	1	Plug, Male - 12 Position	
6	4460944	12	Socket, Female	
6	1001125677	1	Receptacle, Female Buss Bar - 2x6 Position	
7	1001116812	1	Receptacle, Female - 3 Position	
7	4460944	2	Pin, Male	
7	1001144296	1	Cover	
8	4460761	2	Plug, Male - 4 Position	
8	4460227	8	Socket, Female	
9	4460042	1	Terminal, Ring	
10	4460247	2	Terminal, Ring	
11	1001151629	1	Plug, Male - 8 Position	
11	4461023	2	Terminal	
11	4460877	2	Terminal	
12	1001117000	2	Cover, Terminal	
12	1001118387	2	Terminal	
13	4460260	4	Cover, Terminal	
13	4460259	4	Terminal	
14	4460115	1	Terminal, Ring	
15	4460183	1	Terminal, Ring	
16	4460418	1	Connector - 6 Position	
16	4460419	3	Terminal	
17	1001103012	1	Plug, Male - 4 Position	
17	1001107854	4	Socket, Female	
18	4460884	2	Plug, Male - 4 Position	
18	4460465	8	Socket, Female	
18	1001192401	1	Cover	
19	1001207173	1	Terminal, Ring	
20	1001113961	1	Connector - 8 Position	
20	4460871	4	Socket, Female	
20	4460905	4	Plug, Terminal	
21	2400060	3	Fuseholder with Cover	
21	8229242	2	Fuse 5 Amp	
21	8229244	1	Fuse 15 Amp	
22	1001211775	1	Terminal, Ring	

https://truckmanualshub.com/

ITEM	PART NUMBER	QTY	DESCRIPTION	REV
23	4460897	2	Receptacle, Female - 2 Position	
23	4460464	4	Pin, Male	
24	4460891	9	Plug, Male - 2 Position	
24	4460465	16	Socket, Female	
24	4460466	2	Plug, Terminal	
25	4460899	1	Receptacle, Female - 6 Position	
25	4460464	4	Pin, Male	
25	4460466	2	Plug, Terminal	
26	4460894	2	Plug, Male - 6 Position	
26	4460465	12	Socket, Female	
27	4460320	1	Plug, Male - 2 Position	
27	4460226	1	Socket, Female	
28	4460539	1	Plug, Male - 3 Position	
28	4460465	3	Socket, Female	
29	4460930	1	Plug, Male - 8 Position	
29	4460465	6	Socket, Female	
29	4460466	2	Plug, Terminal	

https://truckmanualshub.com/

https://truckmanualshub.com/

FIGURE 7-12. GROUND TO PLATFORM CABLE INSTALLATION - WITHOUT PLATFORM COIL CABLE (CHINA BUILT MACHINES)

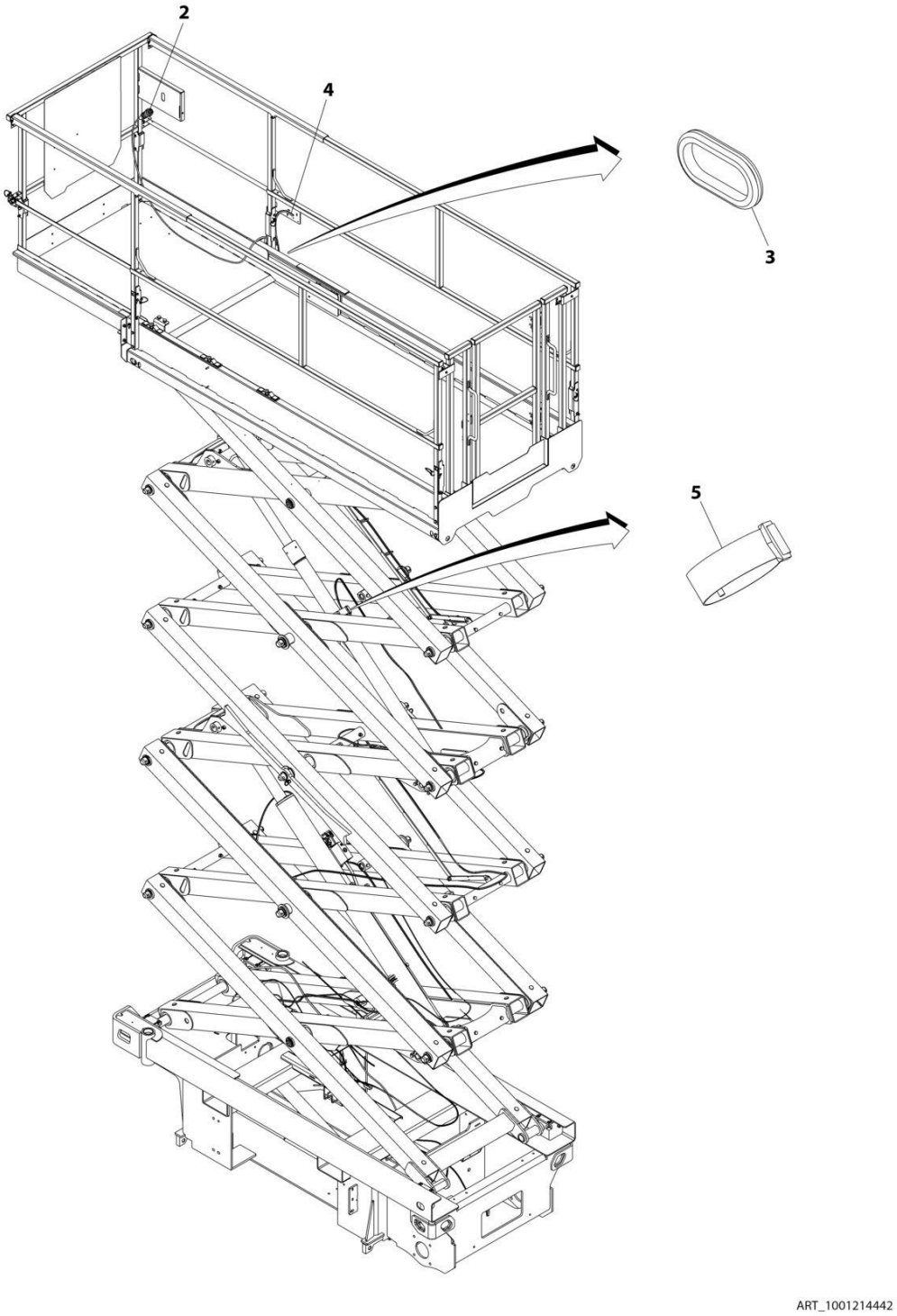

https://truckmanualshub.com/

FIGURE 7-12. GROUND TO PLATFORM CABLE INSTALLATION - WITHOUT PLATFORM COIL CABLE (CHINA BUILT MACHINES)

ITEM	PART NUMBER	QTY	DESCRIPTION	REV
	1001214442	Ref	GROUND TO PLATFORM CABLE INSTALLATION - WITHOUT PLATFORM COIL CABLE (CHINA BUILT MACHINES)	E
1	4240017	AR	Tie-Strap (Not Shown)	
2	1001200812	1	Platform Harness	
2	4460899	1	Receptacle, Female - 6 Position (To Item 4)	
2	4460464	4	Pin, Male	
2	4460943	2	Pin, Male	
2	4460754	1	Connector - 14 Position (To Console Box)	
2	4460465	8	Socket, Female	
2	4460466	6	Plug, Terminal	
3	1001213945	1	Grommet	
4	1001215732	1	Cable Assembly - Ground to Platform	
4	4460894	1	Plug, Male - 6 Position (To Platform Harness Item 2)	
4	4460465	4	Socket, Female	
4	4460944	2	Socket, Female	
4	4460899	1	Receptacle, Female - 6 Position (To Chassis Harness)	
4	4460464	4	Pin, Male	
4	4460943	2	Pin, Male	
5	1001137263	1	Strap, Cinch	

https://truckmanualshub.com/

FIGURE 7-13. GROUND TO PLATFORM CABLE INSTALLATION - WITHOUT PLATFORM COIL CABLE (MEXICO BUILT MACHINES)

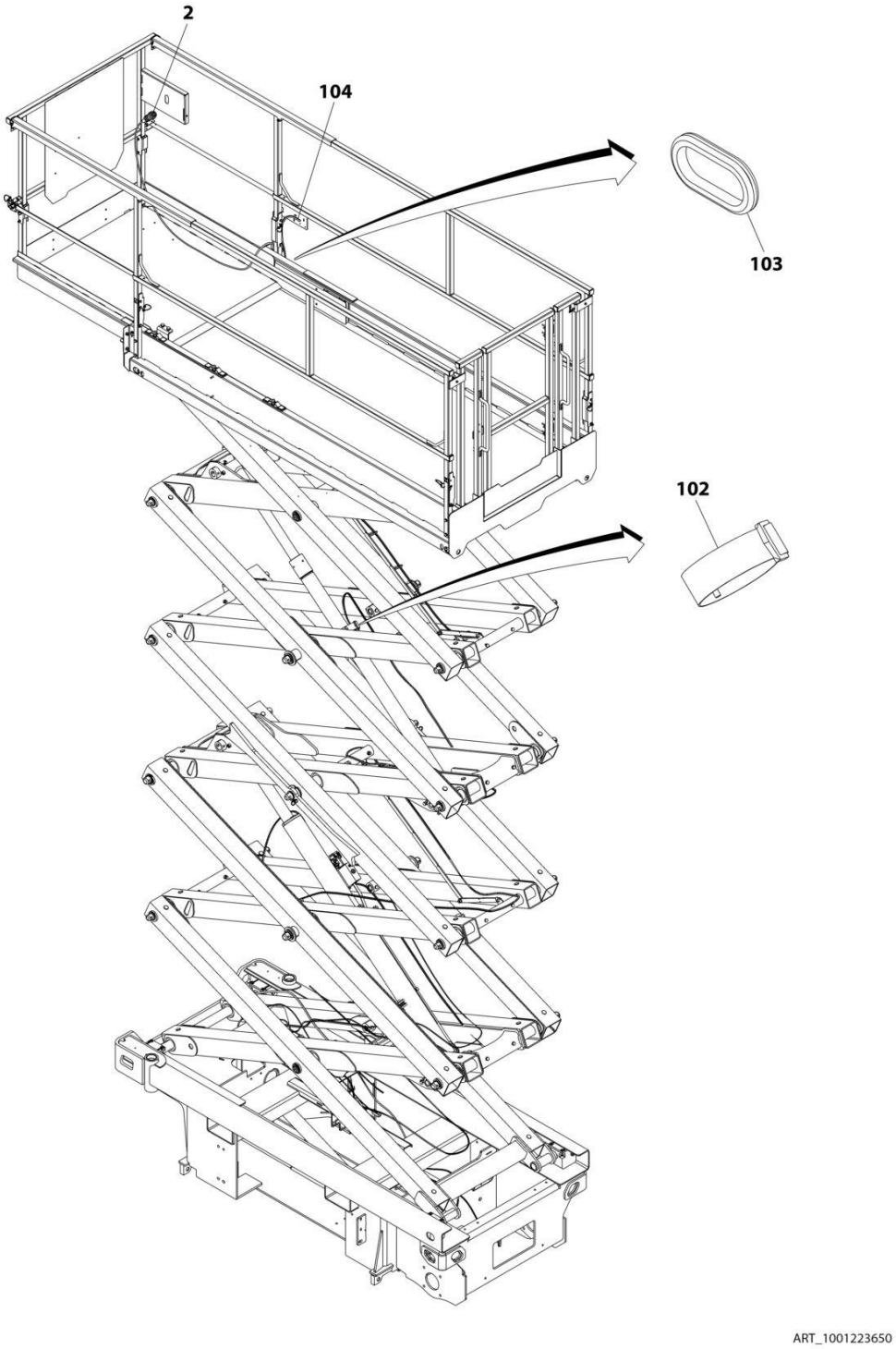

https://truckmanualshub.com/

FIGURE 7-13. GROUND TO PLATFORM CABLE INSTALLATION - WITHOUT PLATFORM COIL CABLE (MEXICO BUILT MACHINES)

ITEM	PART NUMBER	QTY	DESCRIPTION	REV
		Ref	GROUND TO PLATFORM CABLE INSTALLATION - WITHOUT PLATFORM COIL CABLE (MEXICO BUILT MACHINES)	
	1001223650	Ref	PLATFORM CABLE INSTALLATION	A
1	4240017	AR	Tie-Strap (Not Shown)	
2	1001200812	1	Platform Harness	
2	4460899	1	Receptacle, Female - 6 Position (To Item 104)	
2	4460464	4	Pin, Male	
2	4460943	2	Pin, Male	
2	4460754	1	Connector - 14 Position (To Console Box)	
2	4460465	8	Socket, Female	
2	4460466	6	Plug, Terminal	
	1001223447	Ref	GROUND TO PLATFORM CABLE INSTALLATION	A
101	4240017	AR	Tie-Strap (Not Shown)	
102	1001137263	1	Strap, Cinch	
103	1001213945	1	Grommet	
104	1001215732	1	Cable Assembly - Ground to Platform	
104	4460894	1	Plug, Male - 6 Position (To Platform Harness Item 2)	
104	4460465	4	Socket, Female	
104	4460944	2	Socket, Female	
104	4460899	1	Receptacle, Female - 6 Position (To Chassis Harness)	
104	4460464	4	Pin, Male	
104	4460943	2	Pin, Male	

https://truckmanualshub.com/

FIGURE 7-14. GROUND TO PLATFORM CABLE INSTALLATION - WITH PLATFORM COIL CABLE (CHINA BUILT MACHINES)

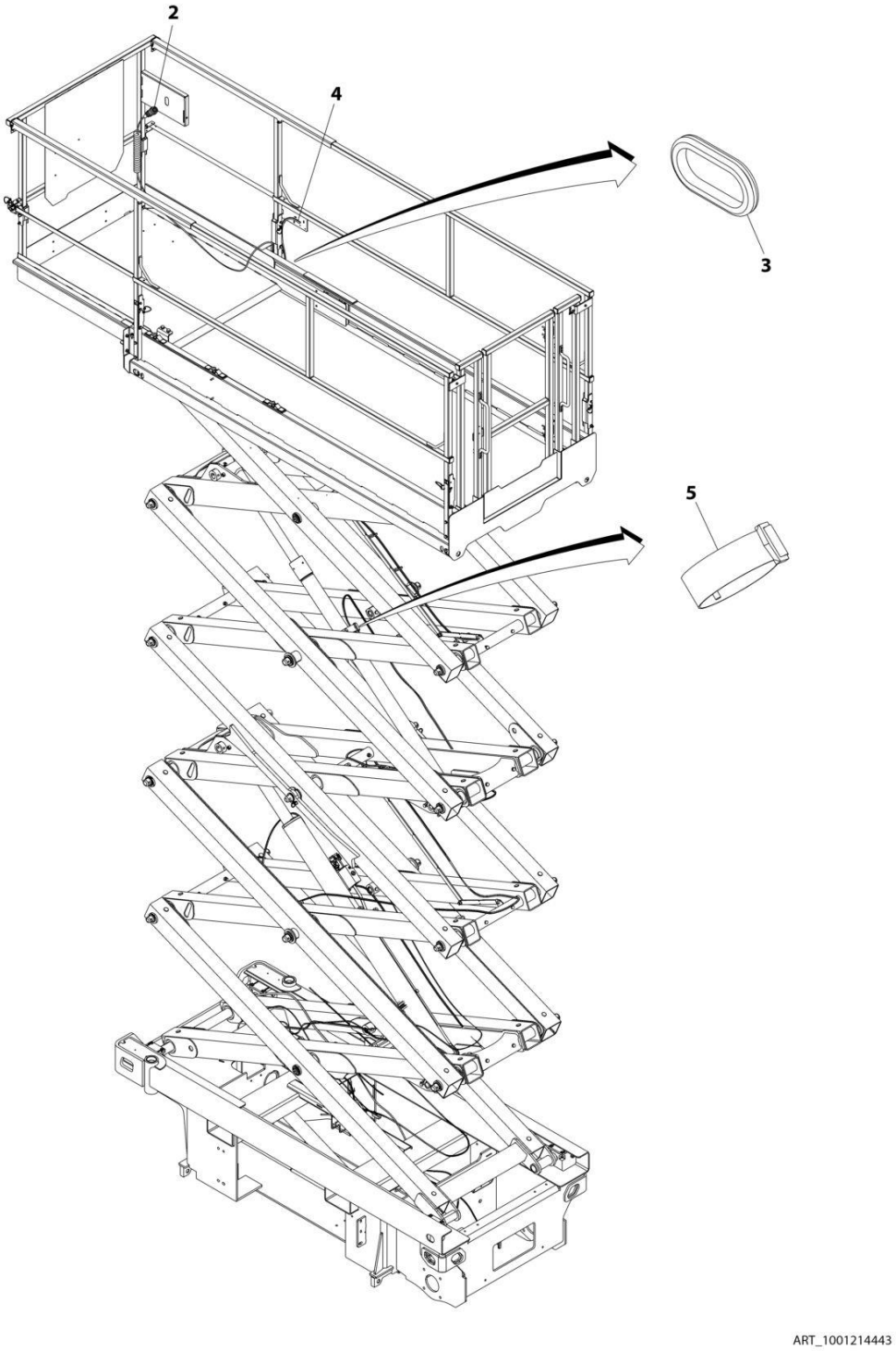

https://truckmanualshub.com/

FIGURE 7-14. GROUND TO PLATFORM CABLE INSTALLATION - WITH PLATFORM COIL CABLE (CHINA BUILT MACHINES)

ITEM	PART NUMBER	QTY	DESCRIPTION	REV
	1001214443	Ref	GROUND TO PLATFORM CABLE INSTALLATION - WITH PLATFORM COIL CABLE (CHINA BUILT MACHINES)	E
1	4240017	AR	Tie-Strap (Not Shown)	
2	1001202184	1	Platform Harness	
2	4460899	1	Receptacle, Female - 6 Position (To Item 4)	
2	4460464	4	Pin, Male	
2	4460943	2	Pin, Male	
2	4460754	1	Connector - 14 Position (To Console Box)	
2	4460465	8	Socket, Female	
2	4460466	6	Plug, Terminal	
3	1001213945	1	Grommet	
4	1001215732	1	Cable Assembly - Ground to Platform	
4	4460894	1	Plug, Male - 6 Position (To Platform Harness Item 2)	
4	4460465	4	Socket, Female	
4	4460944	2	Socket, Female	
4	4460899	1	Receptacle, Female - 6 Position (To Chassis Harness)	
4	4460464	4	Pin, Male	
4	4460943	2	Pin, Male	
5	1001137263	1	Strap, Cinch	

https://truckmanualshub.com/

FIGURE 7-15. GROUND TO PLATFORM CABLE INSTALLATION - WITH PLATFORM COIL CABLE (MEXICO BUILT MACHINES)

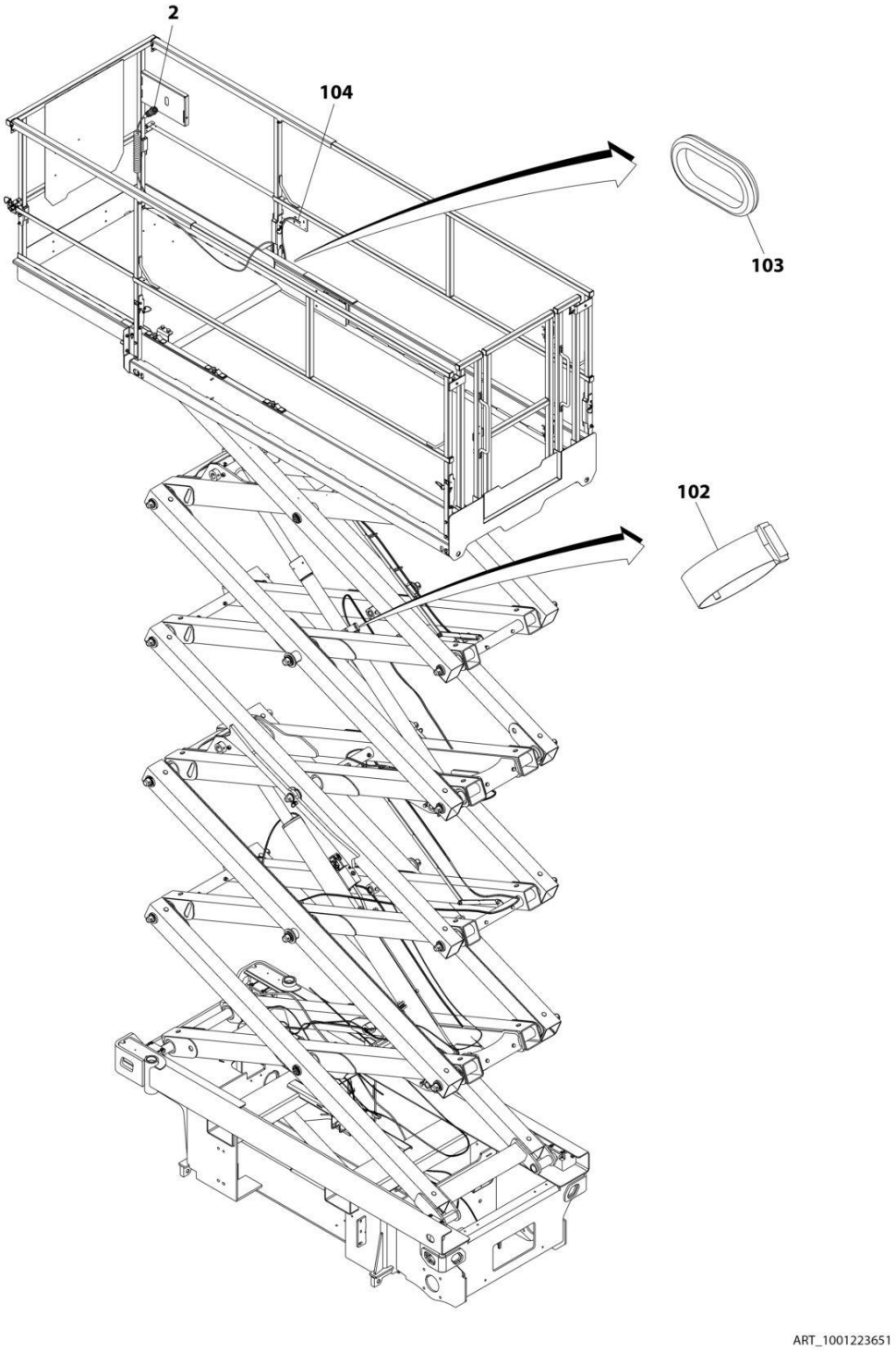

https://truckmanualshub.com/

FIGURE 7-15. GROUND TO PLATFORM CABLE INSTALLATION - WITH PLATFORM COIL CABLE (MEXICO BUILT MACHINES)

ITEM	PART NUMBER	QTY	DESCRIPTION	REV
		Ref	GROUND TO PLATFORM CABLE INSTALLATION - WITH PLATFORM COIL CABLE (MEXICO BUILT MACHINES)	
	1001223651	Ref	PLATFORM CABLE INSTALLATION	A
1	4240017	AR	Tie-Strap (Not Shown)	
2	1001202184	1	Platform Harness	
2	4460899	1	Receptacle, Female - 6 position (To Item 104)	
2	4460464	4	Pin, Male	
2	4460943	2	Pin, Male	
2	4460754	1	Connector - 14 Position (To Console Box)	
2	4460465	8	Socket, Female	
2	4460466	6	Plug, Terminal	
	1001223447	Ref	GROUND TO PLATFORM CABLE INSTALLATION	A
101	4240017	AR	Tie-Strap (Not Shown)	
102	1001137263	1	Strap, Cinch	
103	1001213945	1	Grommet	
104	1001215732	1	Cable Assembly - Ground to Platform	
104	4460894	1	Plug, Male - 6 Position (To Platform Harness Item 2)	
104	4460465	4	Socket, Female	
104	4460944	2	Socket, Female	
104	4460899	1	Receptacle, Female - 6 Position (To Chassis Harness)	
104	4460464	4	Pin, Male	
104	4460943	2	Pin, Male	

https://truckmanualshub.com/

FIGURE 7-16. GROUND TO PLATFORM CABLE INSTALLATION - WITHOUT PLATFORM COIL CABLE AND WITH FOOTSWITCH (CHINA BUILT MACHINES)

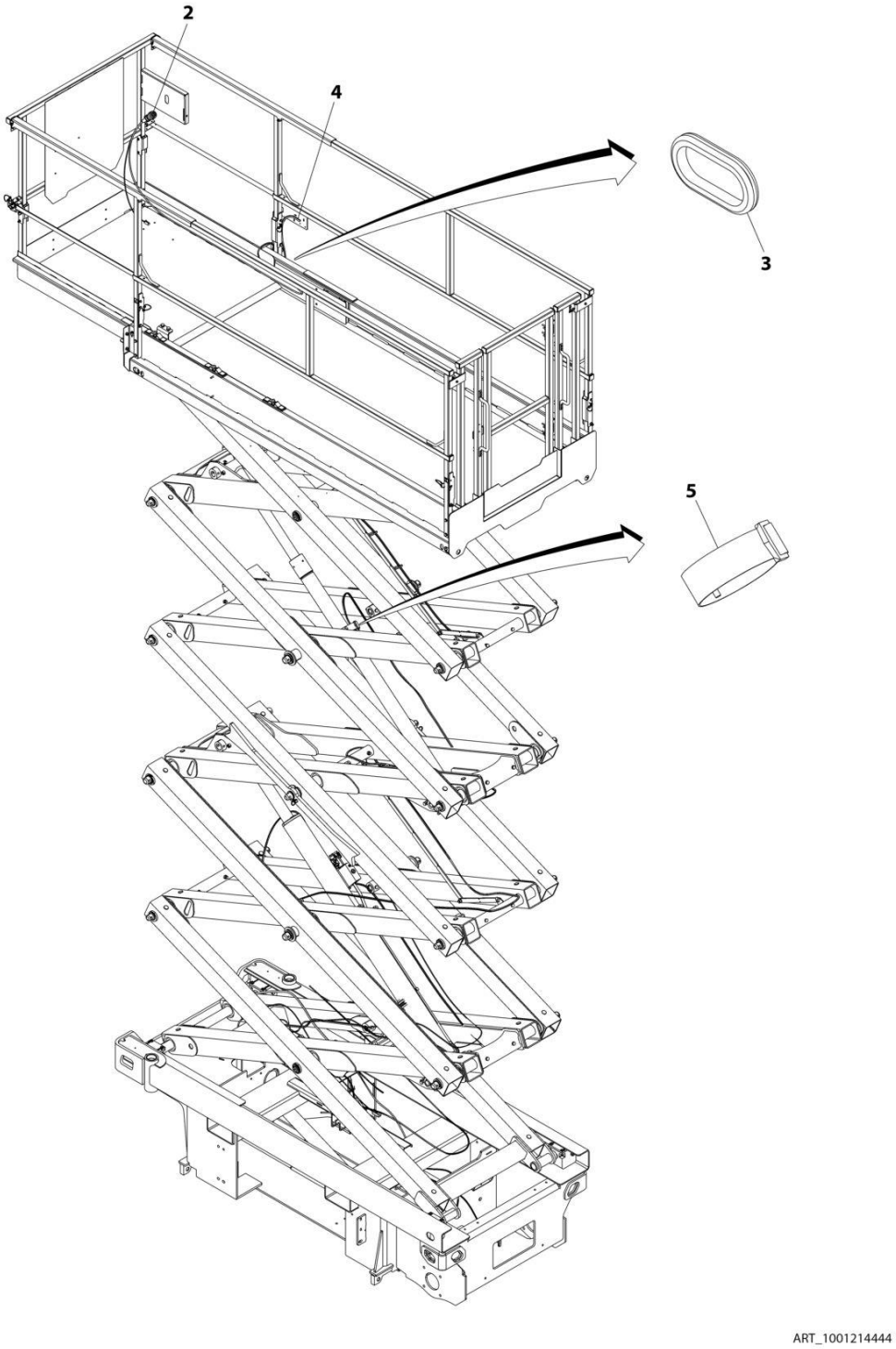

https://truckmanualshub.com/

FIGURE 7-16. GROUND TO PLATFORM CABLE INSTALLATION - WITHOUT PLATFORM COIL CABLE AND WITH FOOTSWITCH (CHINA BUILT MACHINES)

ITEM	PART NUMBER	QTY	DESCRIPTION	REV
	1001214444	Ref	GROUND TO PLATFORM CABLE INSTALLATION - WITHOUT PLATFORM COIL CABLE AND WITH FOOTSWITCH (CHINA BUILT MACHINES)	F
		Ref	Note: Only Available on Japanese Specs.	
1	4240017	AR	Tie-Strap (Not Shown)	
2	1001223263	1	Platform Harness - Without Coil Cable	
2	4460899	1	Receptacle, Female - 6 Position (To Ground to Platform Cable to Item 4)	
2	4460464	4	Pin, Male	
2	4460943	2	Pin, Male	
2	4460539	1	Plug, Male - 3 Position (To Overhead Switches)	
2	4460465	2	Socket, Female	
2	4460466	1	Plug, Terminal	
2	4460891	1	Plug, Male - 2 Position (To Footswitch)	
2	4460465	2	Socket, Female	
2	4460754	1	Connector - 14 Position (To Platform Box)	
2	4460465	8	Socket, Female	
2	4460944	2	Socket, Female	
2	4460466	4	Plug, Terminal	
2	4460897	1	Receptacle, Female - 2 Position (Jumper for Footswitch Plug)	
2	4460464	2	Pin, Male	
3	1001213945	1	Grommet	
4	1001215732	1	Cable Assembly - Ground to Platform	
4	4460894	1	Plug, Male - 6 Position (To Platform Harness Item 2)	
4	4460465	4	Socket, Female	
4	4460944	2	Socket, Female	
4	4460899	1	Receptacle, Female - 6 Position (To Chassis Harness)	
4	4460464	4	Pin, Male	
4	4460943	2	Pin, Male	
5	1001137263	1	Strap, Cinch	

https://truckmanualshub.com/

FIGURE 7-17. GROUND TO PLATFORM CABLE INSTALLATION - WITH PLATFORM COIL CABLE & FOOTSWITCH (CHINA BUILT MACHINES)

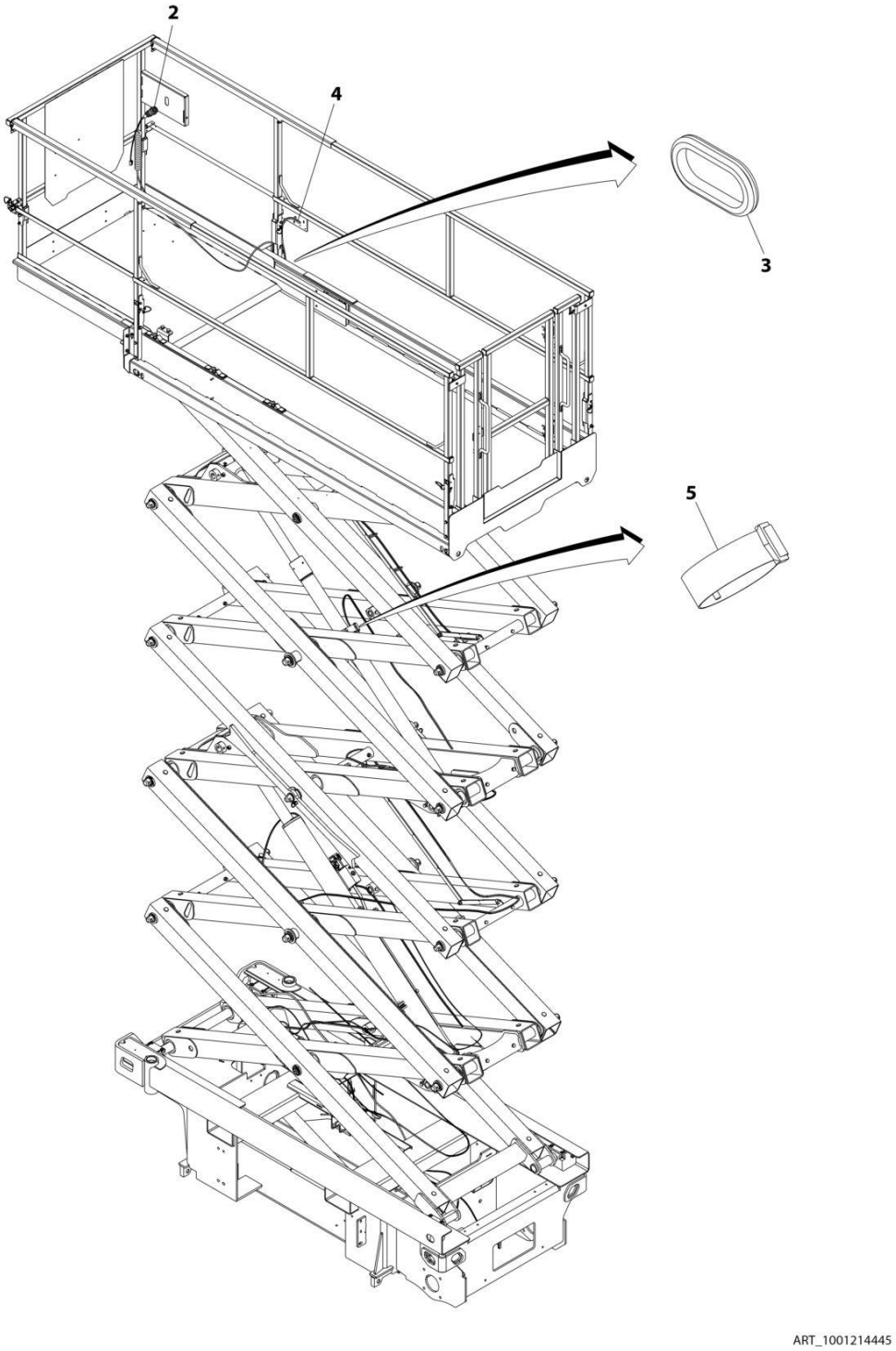

https://truckmanualshub.com/

FIGURE 7-17. GROUND TO PLATFORM CABLE INSTALLATION - WITH PLATFORM COIL CABLE & FOOTSWITCH (CHINA BUILT MACHINES)

ITEM	PART NUMBER	QTY	DESCRIPTION	REV
	1001214445	Ref	GROUND TO PLATFORM CABLE INSTALLATION - WITH PLATFORM COIL CABLE AND FOOTSWITCH (CHINA BUILT MACHINES)	F
		Ref	Note: Only Available on Japanese Specs.	
1	4240017	AR	Tie-Strap (Not Shown)	
2	1001223262	1	Platform Harness - With Coil Cable	
2	4460899	1	Receptacle, Female - 6 Position (To Ground to Platform Cable to Item 4)	
2	4460464	4	Pin, Male	
2	4460943	2	Pin, Male	
2	4460539	1	Plug, Male - 3 Position (To Overhead Switches)	
2	4460465	2	Socket, Female	
2	4460466	1	Plug, Terminal	
2	4460891	1	Plug, Male - 2 Position (To Footswitch)	
2	4460465	2	Socket, Female	
2	4460754	1	Connector - 14 Position (To Platform Box)	
2	4460465	8	Socket, Female	
2	4460944	2	Socket, Female	
2	4460466	4	Plug, Terminal	
2	4460897	1	Receptacle, Female - 2 Position (Jumper for Footswitch Plug)	
2	4460464	2	Pin, Male	
3	1001213945	1	Grommet	
4	1001215732	1	Cable Assembly - Ground to Platform	
4	4460894	1	Plug, Male - 6 Position (To Platform Harness Item 2)	
4	4460465	4	Socket, Female	
4	4460944	2	Socket, Female	
4	4460899	1	Receptacle, Female - 6 Position (To Chassis Harness)	
4	4460464	4	Pin, Male	
4	4460943	2	Pin, Male	
5	1001137263	1	Strap, Cinch	

https://truckmanualshub.com/

FIGURE 7-18. INVERTER HARNESS

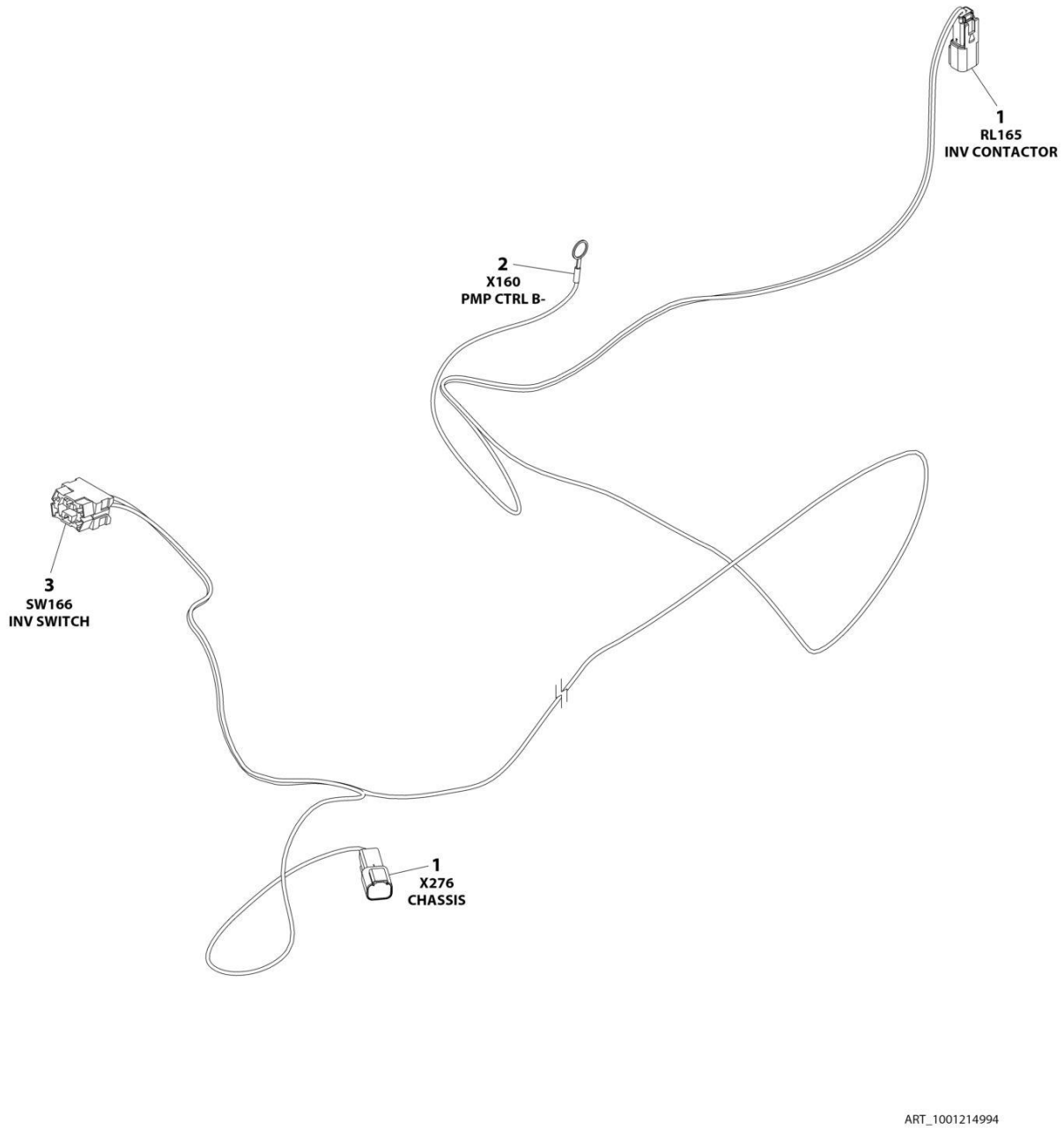

https://truckmanualshub.com/

FIGURE 7-18. INVERTER HARNESS

ITEM	PART NUMBER	QTY	DESCRIPTION	REV
	1001214994	Ref	INVERTER HARNESS	A
1	4460897	2	Receptacle, Female - 2 Position	
1	4460464	3	Pin, Male	
1	4460466	1	Plug, Terminal	
2	4460722	1	Terminal, Ring	
3	4460418	1	Connector - 6 Position	
3	4460419	2	Terminal	

https://truckmanualshub.com/

FIGURE 7-19. LIFT DOWN HARNESS - LOWER

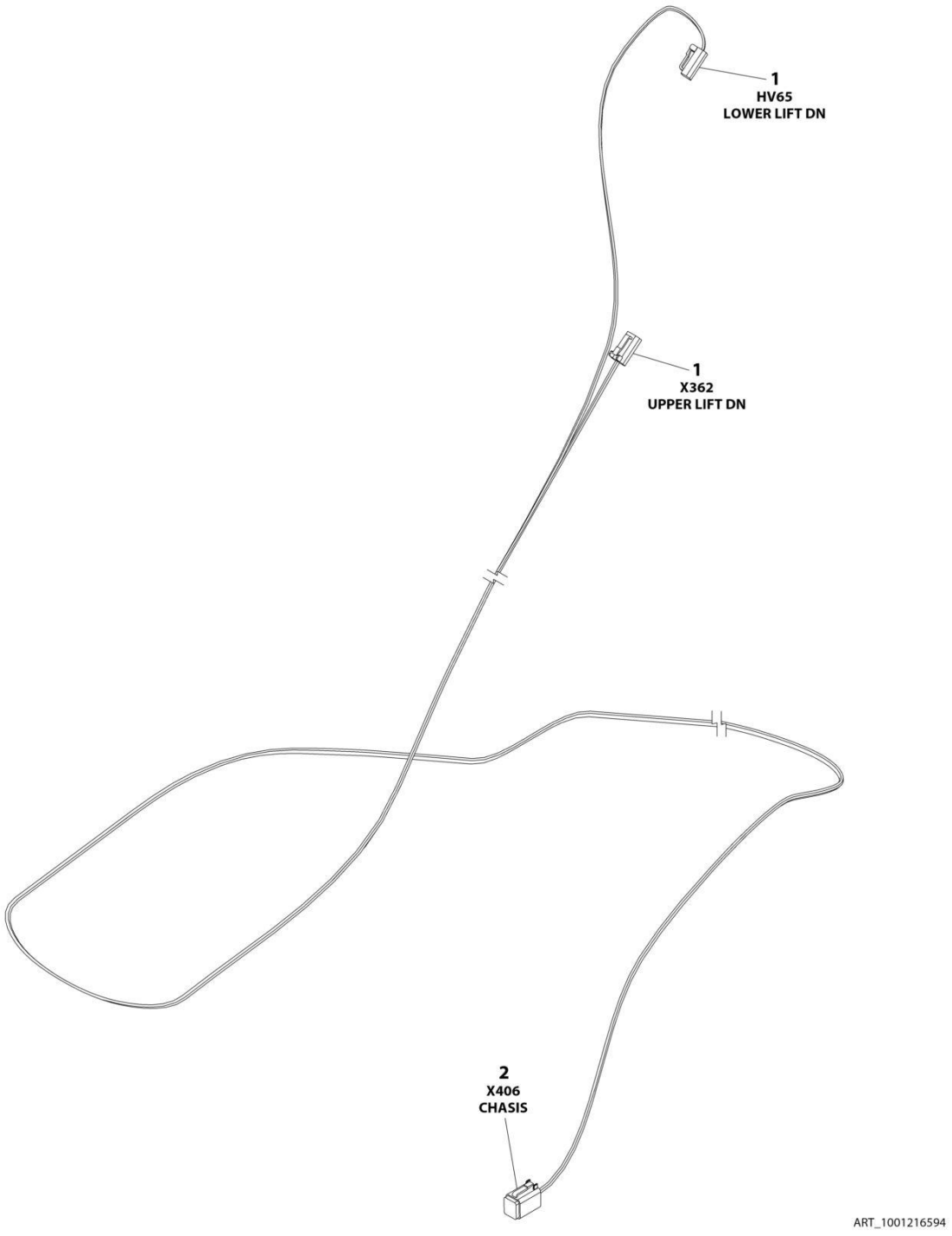

https://truckmanualshub.com/

FIGURE 7-19. LIFT DOWN HARNESS - LOWER

ITEM	PART NUMBER	QTY	DESCRIPTION	REV
	1001216594	Ref	LIFT DOWN HARNESS - LOWER	D
1	4460891	2	Plug, Male - 2 Position	
1	4460465	4	Socket, Female	
2	4460894	1	Plug, Male - 6 Position	
2	4460465	4	Socket, Female	
2	4460466	2	Plug, Terminal	

https://truckmanualshub.com/

FIGURE 7-20. LIFT DOWN HARNESS - UPPER

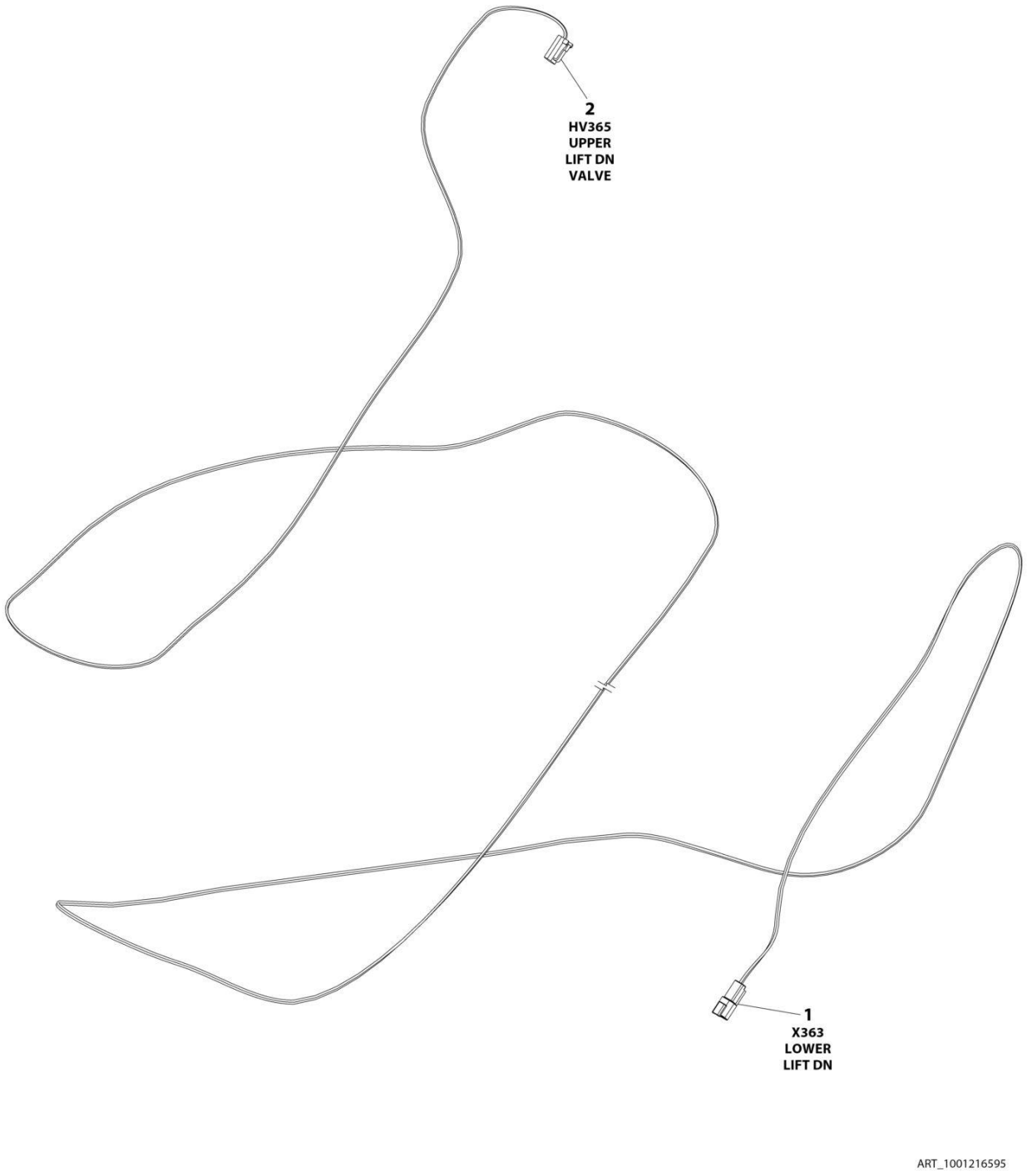

https://truckmanualshub.com/

FIGURE 7-20. LIFT DOWN HARNESS - UPPER

ITEM	PART NUMBER	QTY	DESCRIPTION	REV
	1001216595	Ref	LIFT DOWN HARNESS - UPPER	A
1	4460897	1	Receptacle, Female - 2 Position	
1	4460464	2	Pin, Male	
2	4460891	1	Plug, Male - 2 Position	
2	4460465	2	Socket, Female	

https://truckmanualshub.com/

FIGURE 7-21. LSS HARNESS

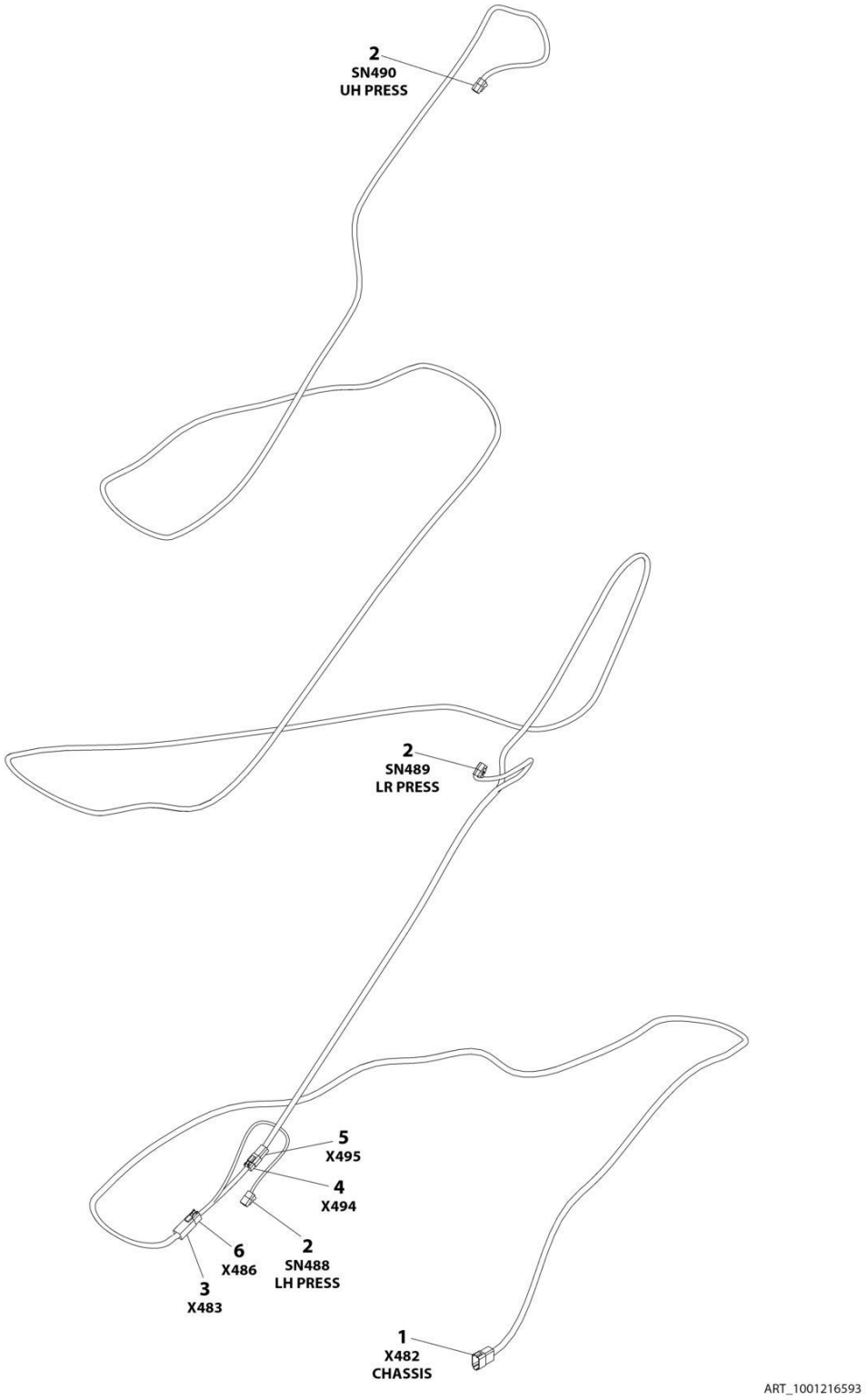

https://truckmanualshub.com/

FIGURE 7-21. LSS HARNESS

ITEM	PART NUMBER	QTY	DESCRIPTION	REV
	1001216593	Ref	LSS HARNESS	C
1	4460931	1	Receptacle, Female - 8 Position	
1	4460464	6	Pin, Male	
1	4460466	2	Plug, Terminal	
2	4460539	3	Plug, Male - 3 Position	
2	4460465	9	Socket, Female	
3	4460899	1	Receptacle, Female - 6 Position	
3	4460464	6	Pin, Male	
4	4460884	1	Plug, Male - 6 Position	
4	4460465	4	Socket, Female	
5	4460932	1	Receptacle, Female - 4 Position	
5	4460464	4	Pin, Male	
6	4460894	1	Plug, Male - 6 Position	
6	4460465	6	Socket, Female	

https://truckmanualshub.com/

FIGURE 7-22. PLATFORM CONTROL BOX HARNESS

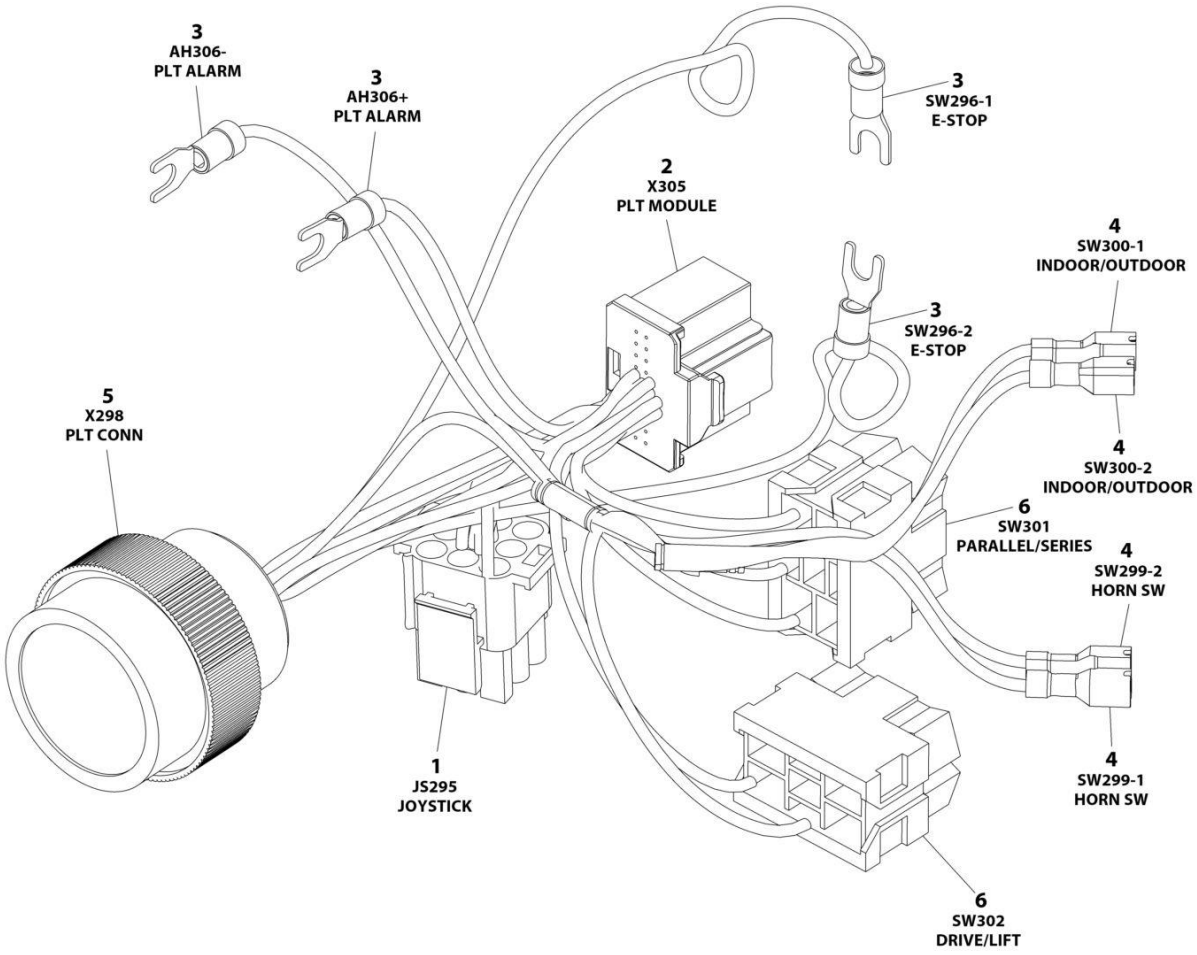

ART_1001200819

https://truckmanualshub.com/

FIGURE 7-22. PLATFORM CONTROL BOX HARNESS

ITEM	PART NUMBER	QTY	DESCRIPTION	REV
	1001200819	Ref	PLATFORM CONTROL BOX HARNESS	B
1	4460265	1	Plug, Male - 9 Position	
1	4460267	8	Pin, Male	
2	1001212036	1	Connector - 20 Position	
2	1001212035	17	Terminal	
3	4460183	4	Terminal, Fork	
4	1001201885	4	Terminal with Cover	
5	4461016	1	Connector - 14 Position	
5	4460464	8	Pin, Male	
5	4460466	6	Plug, Terminal	
6	4460418	2	Connector - 6 Position	
6	4460419	5	Terminal	

https://truckmanualshub.com/

FIGURE 7-23. RECEPTACLE BOX KIT - 110V GFI

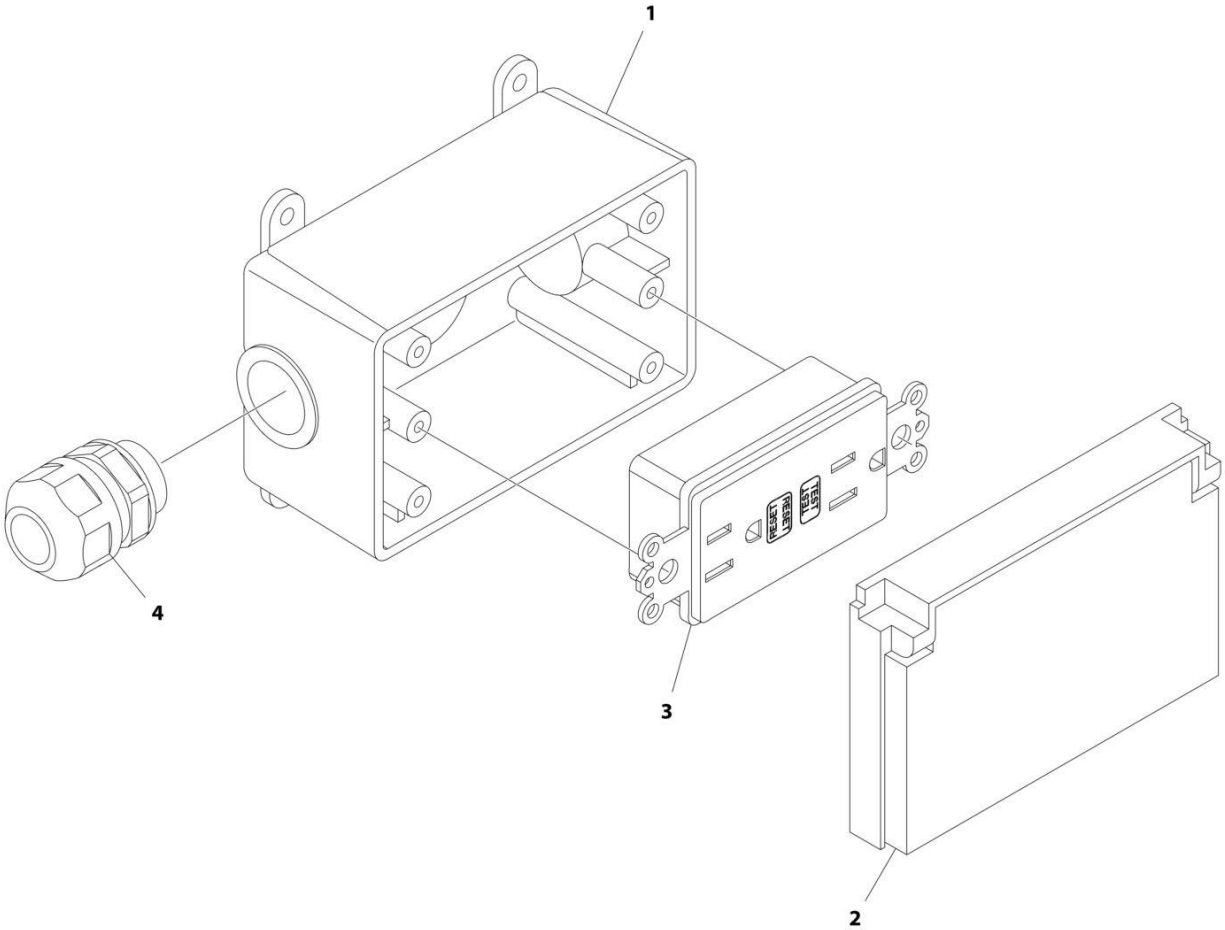

ART_2902431

https://truckmanualshub.com/

FIGURE 7-23. RECEPTACLE BOX KIT - 110V GFI

ITEM	PART NUMBER	QTY	DESCRIPTION	REV
	2902431	Ref	RECEPTACLE BOX KIT - 110V GFI	C
1	0861731	1	Box, Receptacle	
2	1671207	1	Cover, Receptacle	
3	4460346	1	Receptacle	
4	4460662	1	Connector, Strain Relief	

https://truckmanualshub.com/

FIGURE 7-24. RECEPTACLE BOX KIT - 110V IEC YELLOW (CE SPEC)

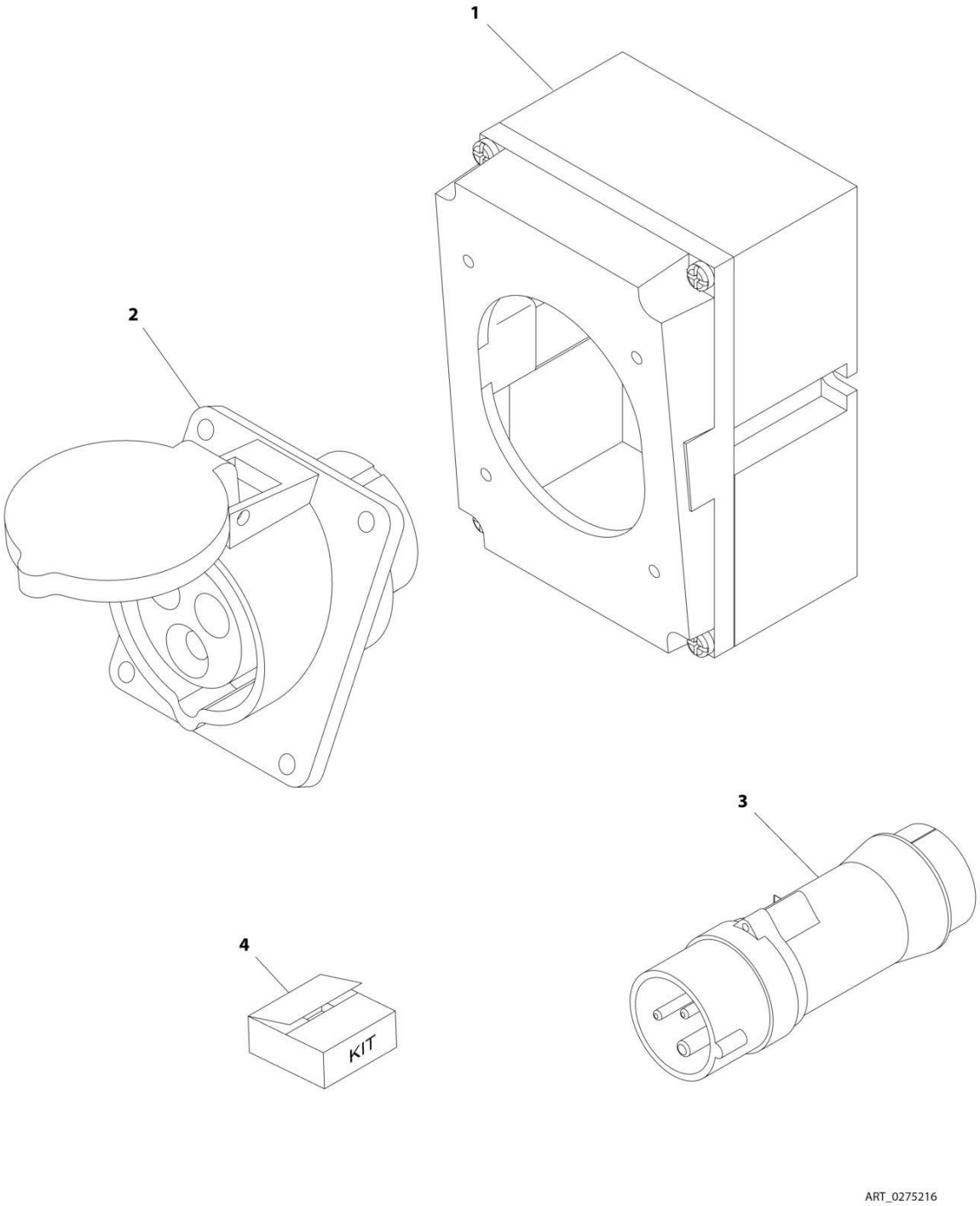

https://truckmanualshub.com/

FIGURE 7-24. RECEPTACLE BOX KIT - 110V IEC YELLOW (CE SPEC)

ITEM	PART NUMBER	QTY	DESCRIPTION	REV
	0275216	Ref	RECEPTACLE BOX KIT - 110V IEC YELLOW (CE SPEC)	1
1	0861781	1	Box, Switch	
2	4461198	1	Receptacle	
3	4461196	1	Plug, Male	
4	1001100341	1	Plug and Socket Kit (Includes Items 1-3 and Female Plug p/n 4461197)	

https://truckmanualshub.com/

FIGURE 7-25. RECEPTACLE BOX KIT - 220V IEC BLUE (CE SPEC)

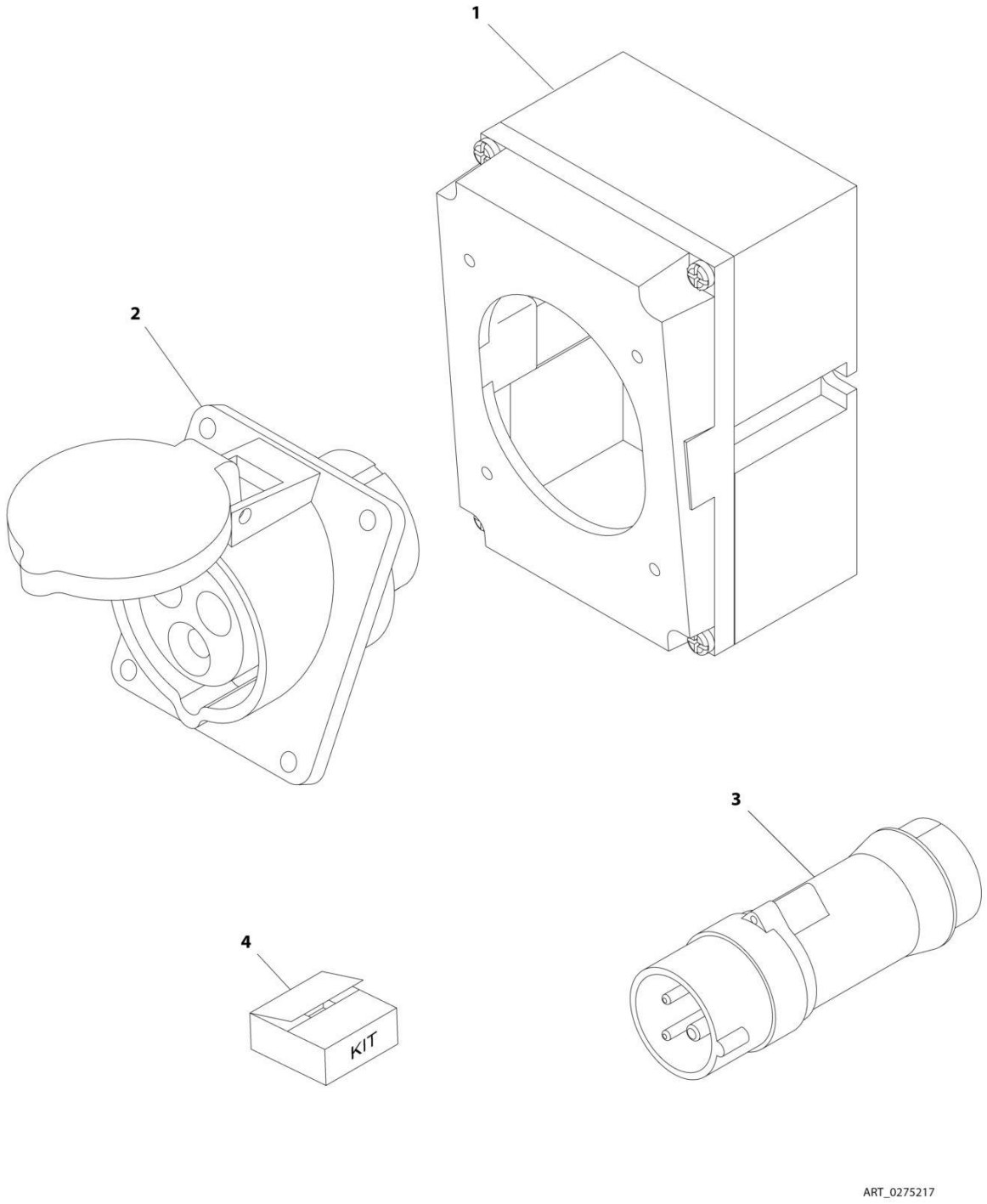

https://truckmanualshub.com/

FIGURE 7-25. RECEPTACLE BOX KIT - 220V IEC BLUE (CE SPEC)

ITEM	PART NUMBER	QTY	DESCRIPTION	REV
	0275217	Ref	RECEPTACLE BOX KIT - 220V IEC BLUE (CE SPEC)	1
1	0861781	1	Box, Switch	
2	4461201	1	Receptacle	
3	4461199	1	Plug, Male	
4	1001100342	1	Plug and Socket Kit (Includes Items 1-3 and Female Plug p/n 4461200)	

https://truckmanualshub.com/

FIGURE 7-26. RECEPTACLE BOX KIT - 220V CEE7 POST GROUND (CE SPEC)

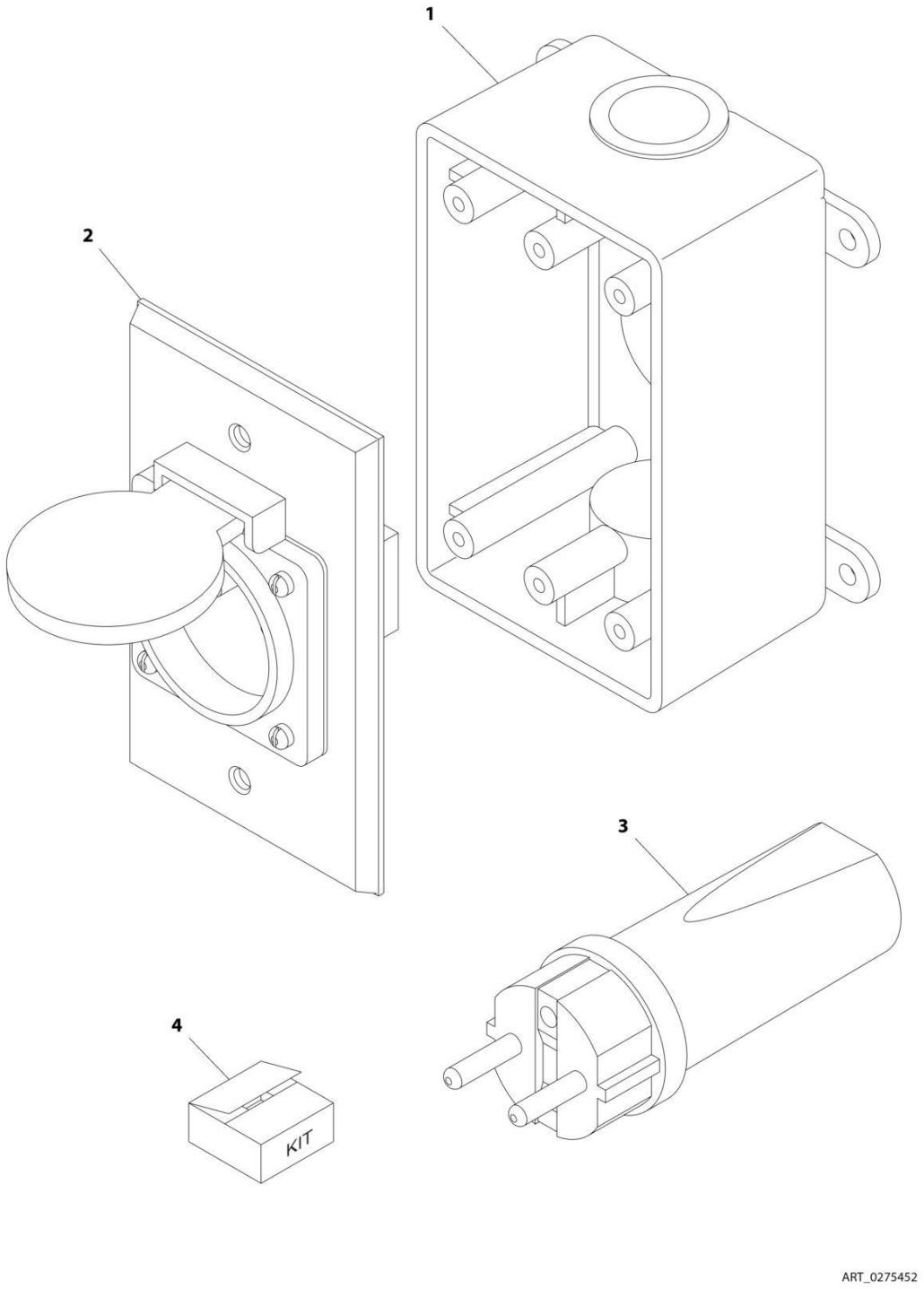

https://truckmanualshub.com/

FIGURE 7-26. RECEPTACLE BOX KIT - 220V CEE7 POST GROUND (CE SPEC)

ITEM	PART NUMBER	QTY	DESCRIPTION	REV
	0275452	Ref	RECEPTACLE BOX KIT - 220V CEE7 POST GROUND (CE SPEC)	1
1	0861731	1	Box, Switch	
2	4461244	1	Receptacle	
3	4461202	1	Plug, Male	
4	1001100345	1	Plug and Socket Kit (Includes Items 1-3 and Female Plug p/n 4461206)	

https://truckmanualshub.com/

FIGURE 7-27. RECEPTACLE BOX KIT - 220V CEE7 SIDE GROUND (CE SPEC)

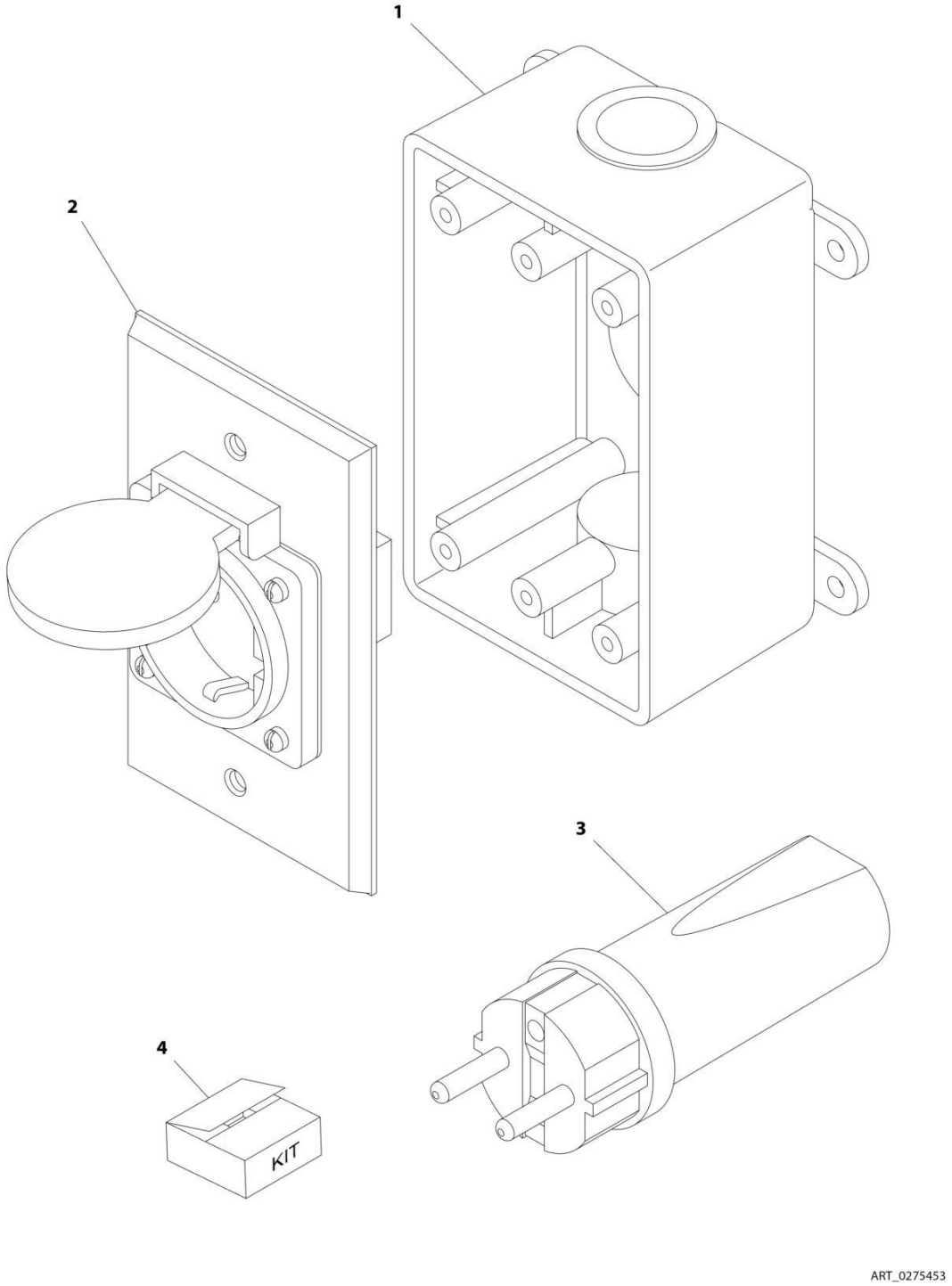

https://truckmanualshub.com/

FIGURE 7-27. RECEPTACLE BOX KIT - 220V CEE7 SIDE GROUND (CE SPEC)

ITEM	PART NUMBER	QTY	DESCRIPTION	REV
	0275453	Ref	RECEPTACLE BOX KIT - 220V CEE7 SIDE GROUND (CE SPEC)	1
1	0861731	1	Box, Switch	
2	4461245	1	Receptacle	
3	4461205	1	Plug, Male	
4	1001100347	1	Plug and Socket Kit (Includes Items 1-3 and Female Plug p/n 4461206)	

https://truckmanualshub.com/

FIGURE 7-28. RECEPTACLE BOX KIT - 220V AFSINT 107 (CE SPEC)

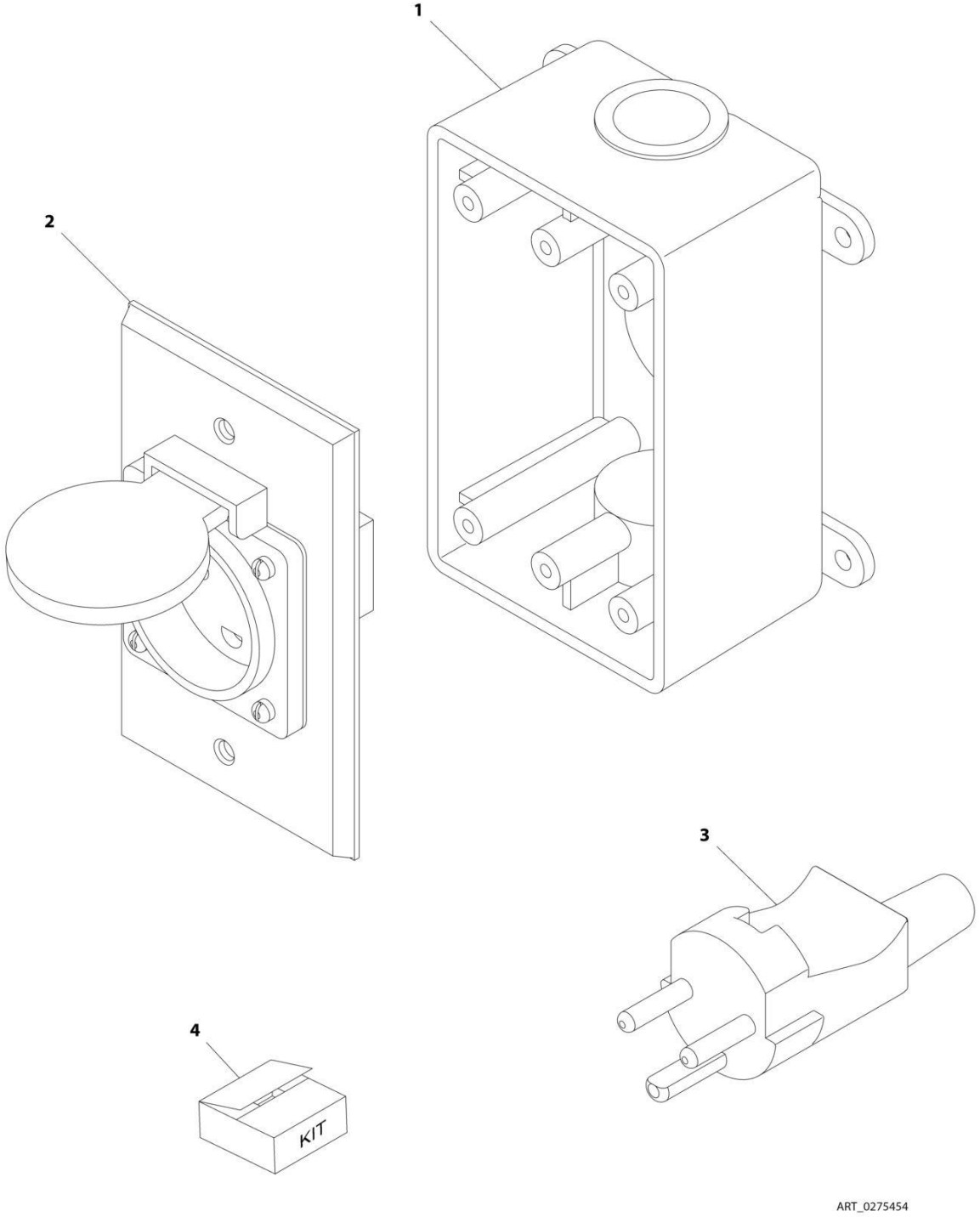

https://truckmanualshub.com/

FIGURE 7-28. RECEPTACLE BOX KIT - 220V AFSINT 107 (CE SPEC)

ITEM	PART NUMBER	QTY	DESCRIPTION	REV
	0275454	Ref	RECEPTACLE BOX KIT - 220V AFSINT 107 (CE SPEC)	1
1	0861731	1	Box, Switch	
2	4461246	1	Receptacle	
3	4461249	1	Plug, Male	
4	1001100346	1	Plug and Socket Kit (Includes Items 1-3 and Female Plug p/n 4461250)	

https://truckmanualshub.com/

https://truckmanualshub.com/

SECTION 8 - DECALS

https://truckmanualshub.com/

SECTION 8 - DECALS

FIGURE 8-1. DECAL INSTALLATION (ANSI SPECS)

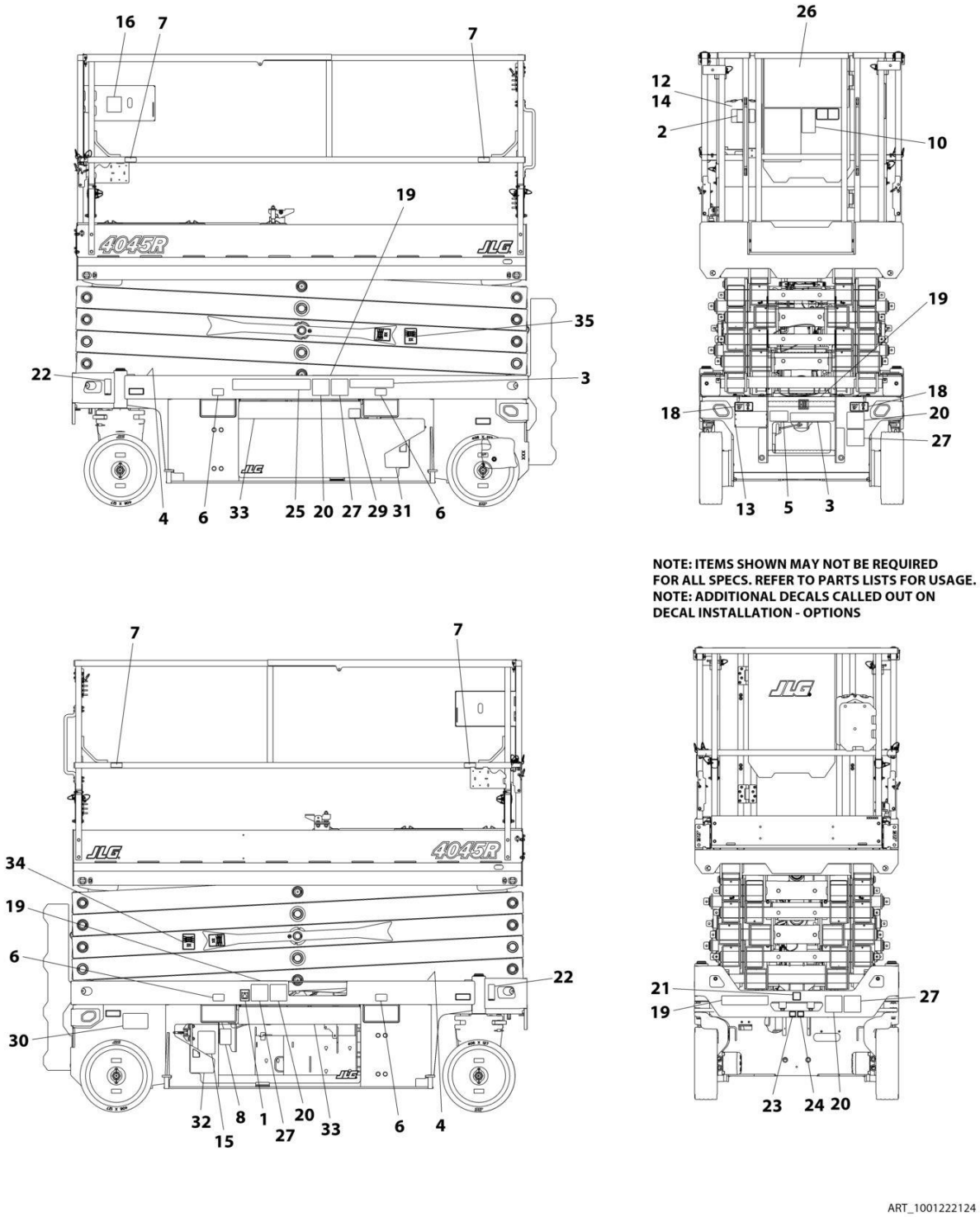

https://truckmanualshub.com/

FIGURE 8-1. DECAL INSTALLATION (ANSI SPECS)

ITEM	PART NUMBER	QTY	DESCRIPTION	REV
	1001222124	Ref	DECAL INSTALLATION (ANSI SPECS)	C
	1001217031	Ref	DECAL REFERENCE CHART	F
1	1701504	1	Decal - Hydraulic Oil	
2	1701640	1	Decal - Manual	
3	1703813	2	Decal - Warning Battery Ventilation	
4	1703819	4	Decal - Direction Arrow	
5	1703822	1	Decal - Manual Descent Instruction	
6	1704016	4	Decal - Forklift	
7	1704277	4	Decal - Lanyard Attach	
8	1704412	1	Decal - Hydraulic Oil	
10	1705686	1	Decal - Legend	
12	2080040	3	Fastener	
13	2080057	4	Fastener	
14	8990147	1	Box, Manual	
15	1001131270	1	Decal - Patent	
16	1001132359	1	Decal - Control Box Locate	
18	1001162864	2	Decal - Lift Up/Tie Down	
19	1001211777	4	Decal - Crushing Hazard	
20	1001211779	4	Decal - Electrocution	
21	1001212290	1	Decal - Tie Down	
22	1001213442	2	Decal - Lift and Tie Down	
23	1001212292	1	Decal - No Lifting	
24	1001212293	1	Decal - No Forklift	
25	1001146794	1	Decal - Battery/Charger Service	
26	1703816	1	Decal - Danger/Warning	
29	1702155	1	Decal - Battery Disconnect	
30	1001223055	1	Decal - Yearly Inspection	
31	1001225620	1	Decal - Model Designation (RH)	
32	1001225621	1	Decal - Model Designation (LH)	
33	1001225622	2	Decal - Black Strip	
34	1001228641	2	Decal - Safety Prop (RH)	
35	1001228642	2	Decal - Safety Prop (LH)	

https://truckmanualshub.com/

FIGURE 8-2. DECAL INSTALLATION (AUSTRALIAN SPECS)

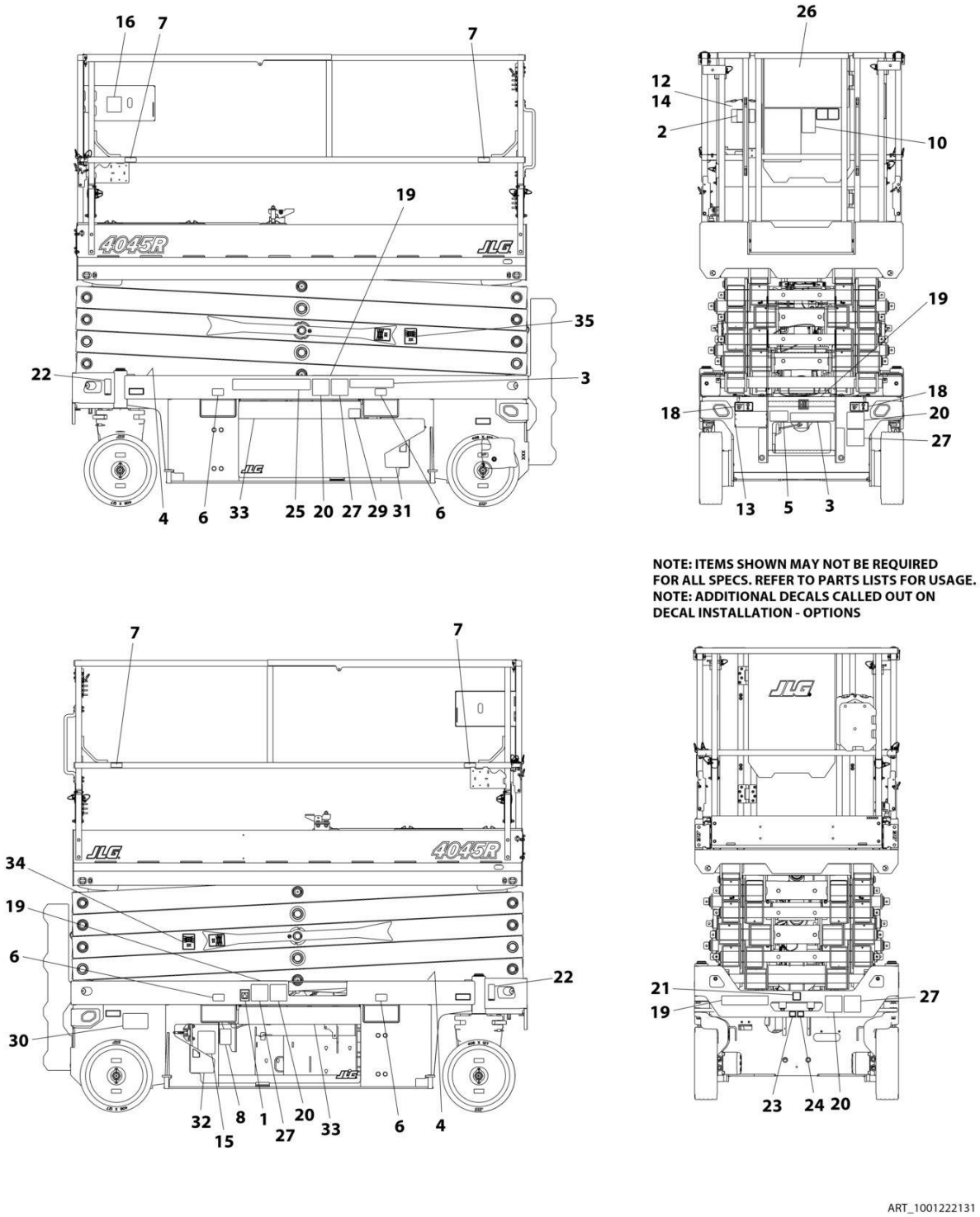

https://truckmanualshub.com/

FIGURE 8-2. DECAL INSTALLATION (AUSTRALIAN SPECS)

ITEM	PART NUMBER	QTY	DESCRIPTION	REV
	1001222131	Ref	DECAL INSTALLATION (AUSTRALIAN SPECS)	C
	1001217031	Ref	DECAL REFERENCE CHART	F
1	1701504	1	Decal - Hydraulic Oil	
2	1701640	1	Decal - Manual	
3	1705670	2	Decal - Fire Hazard	
4	1703819	4	Decal - Dircetion Arrow	
5	1703822	1	Decal - Manual Descent Instruction	
6	1704016	4	Decal - Forklift	
7	1704277	4	Decal - Lanyard Attach	
8	1704412	1	Decal - Hydraulic Oil	
12	2080040	3	Fastener	
13	2080057	4	Fastener	
14	8990147	1	Box, Manual	
16	1001132359	1	Decal - Control Box Locate	
18	1001162864	2	Decal - Lift Up/Tie Down	
19	1705673	4	Decal - Crushing	
20	1705671	5	Decal - Electrocution	
21	1001212290	1	Decal - Tie Down	
22	1001213442	2	Decal - Lift and Tie Down	
23	1001212292	1	Decal - No Lifting	
24	1001212293	1	Decal - No Forklift	
25	1001146794	1	Decal - Battery/Charger Service	
29	1702155	1	Decal - Battery Disconnect	
31	1001225620	1	Decal - Model Designation (RH)	
32	1001225621	1	Decal - Model Designation (LH)	
33	1001225622	2	Decal - Black Strip	
34	1001228641	2	Decal - Safety Prop (RH)	
35	1001228642	2	Decal - Safety Prop (LH)	

https://truckmanualshub.com/

FIGURE 8-3. DECAL INSTALLATION (BRAZIL SPECS)

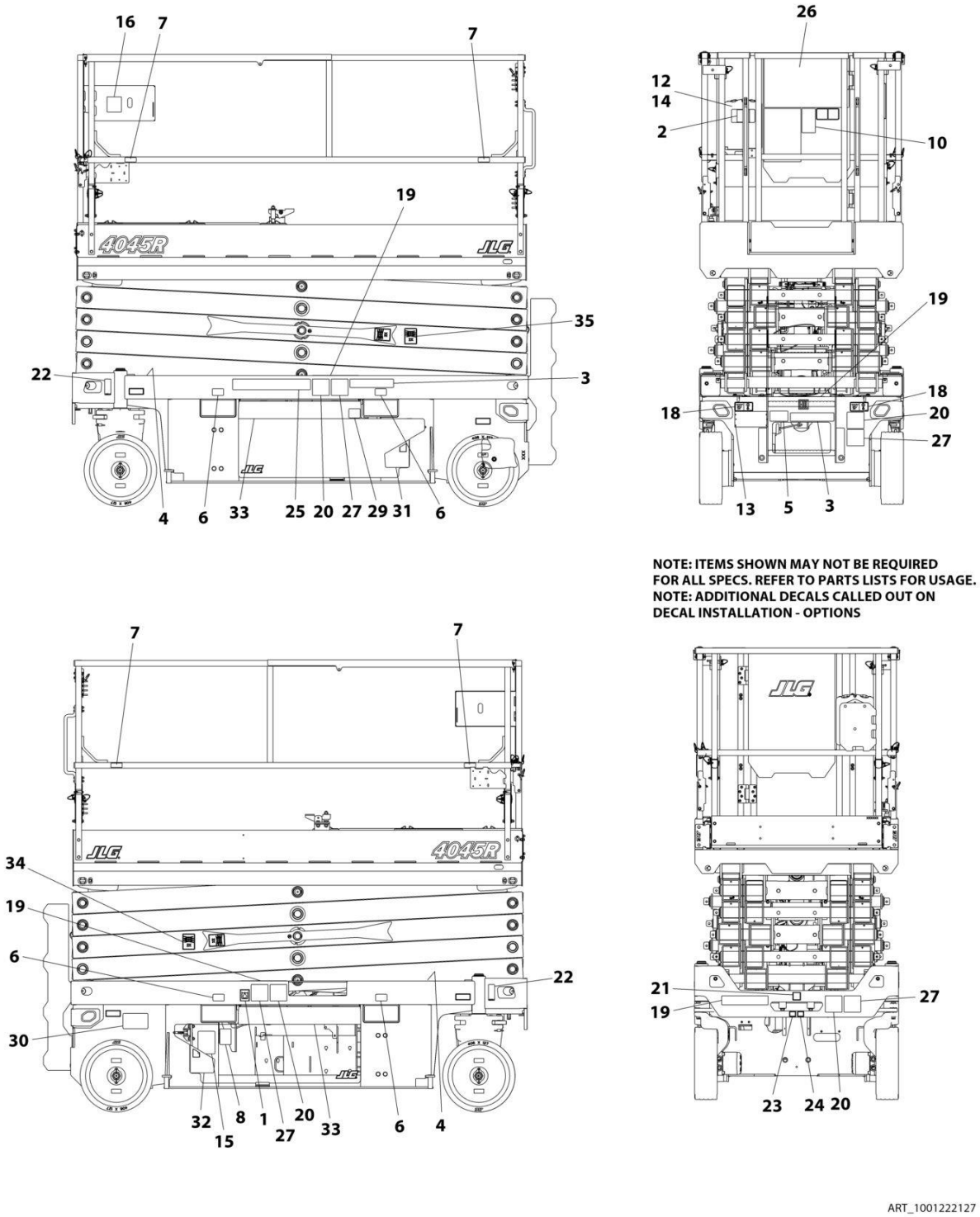

https://truckmanualshub.com/

FIGURE 8-3. DECAL INSTALLATION (BRAZIL SPECS)

ITEM	PART NUMBER	QTY	DESCRIPTION	REV
	1001222127	Ref	DECAL INSTALLATION (BRAZIL SPECS)	C
	1001217031	Ref	DECAL REFERENCE CHART	F
1	1701504	1	Decal - Hydraulic Oil	
2	1701640	1	Decal - Manual	
3	1704341	2	Decal - Warning Battery Ventilation	
4	1703819	4	Decal - Direction Arrow	
5	1703822	1	Decal - Manual Descent Instruction	
6	1704016	4	Decal - Forklift	
7	1704277	4	Decal - Lanyard Attach	
8	1704412	1	Decal - Hydraulic Oil	
10	1705726	1	Decal - Legend	
12	2080040	3	Fastener	
13	2080057	4	Fastener	
14	8990147	1	Box, Manual	
16	1001132359	1	Decal - Control Box Locate	
18	1001162864	2	Decal - Lift Up/Tie Down	
19	1001216650	4	Decal - Crushing Hazard	
20	1001215748	4	Decal - Danger Electrocution	
21	1001212290	1	Decal - Tie Down	
22	1001213442	2	Decal - Lift and Tie Down	
23	1001212292	1	Decal - No Lifting	
24	1001212293	1	Decal - No Forklift	
25	1001146794	1	Decal - Battery/Charger Service	
26	1704699	1	Decal - Danger/Warning	
27	1001216648	4	Decal - Danger Electrocution	
29	1702155	1	Decal - Battery Disconnect	
30	1001224052	1	Decal - Yearly Inspection	
31	1001225620	1	Decal - Model Designation (RH)	
32	1001225621	1	Decal - Model Designation (LH)	
33	1001225622	2	Decal - Black Strip	
34	1001228641	2	Decal - Safety Prop (RH)	
35	1001228642	2	Decal - Safety Prop (LH)	

https://truckmanualshub.com/

FIGURE 8-4. DECAL INSTALLATION (CE SPECS)

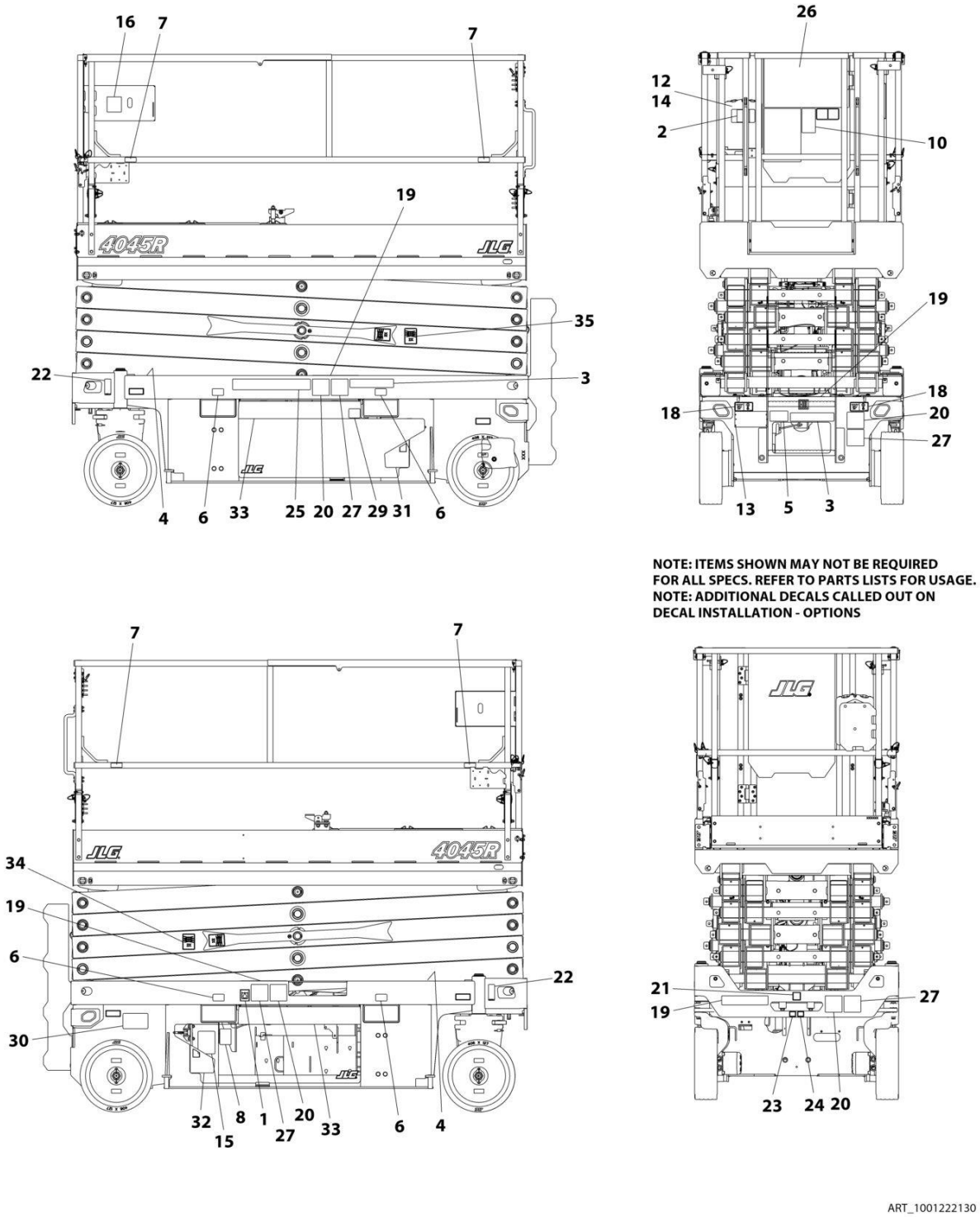

https://truckmanualshub.com/

FIGURE 8-4. DECAL INSTALLATION (CE SPECS)

ITEM	PART NUMBER	QTY	DESCRIPTION	REV
	1001222130	Ref	DECAL INSTALLATION (CE SPECS)	C
	1001217031	Ref	DECAL REFERENCE CHART	F
1	1701504	1	Decal - Hydraulic Oil	
2	1701640	1	Decal - Manual	
3	1705670	2	Decal - Fire Hazard	
4	1703819	4	Decal - Direction Arrow	
5	1703822	1	Decal - Manual Descent Instruction	
6	1704016	4	Decal - Forklift	
7	1704277	4	Decal - Lanyard Attach	
8	1704412	1	Decal - Hydraulic Oil	
12	2080040	3	Fastener	
13	2080057	4	Fastener	
14	8990147	1	Box, Manual	
16	1001132359	1	Decal - Control Box Locate	
18	1001162864	2	Decal - Lift Up/Tie Down	
19	1705673	4	Decal - Crushing	
20	1705671	5	Decal - Electrocution	
21	1001212290	1	Decal - Tie Down	
22	1001213442	2	Decal - Lift and Tie Down	
23	1001212292	1	Decal - No Lifting	
24	1001212293	1	Decal - No Forklift	
25	1001146795	1	Decal - See Manual	
29	1702155	1	Decal - Battery Disconnect	
31	1001225620	1	Decal - Model Designation (RH)	
32	1001225621	1	Decal - Model Designation (LH)	
33	1001225622	2	Decal - Black Strip	
34	1001228641	2	Decal - Safety Prop (RH)	
35	1001228642	2	Decal - Safety Prop (LH)	

https://truckmanualshub.com/

FIGURE 8-5. DECAL INSTALLATION (CHINA SPECS)

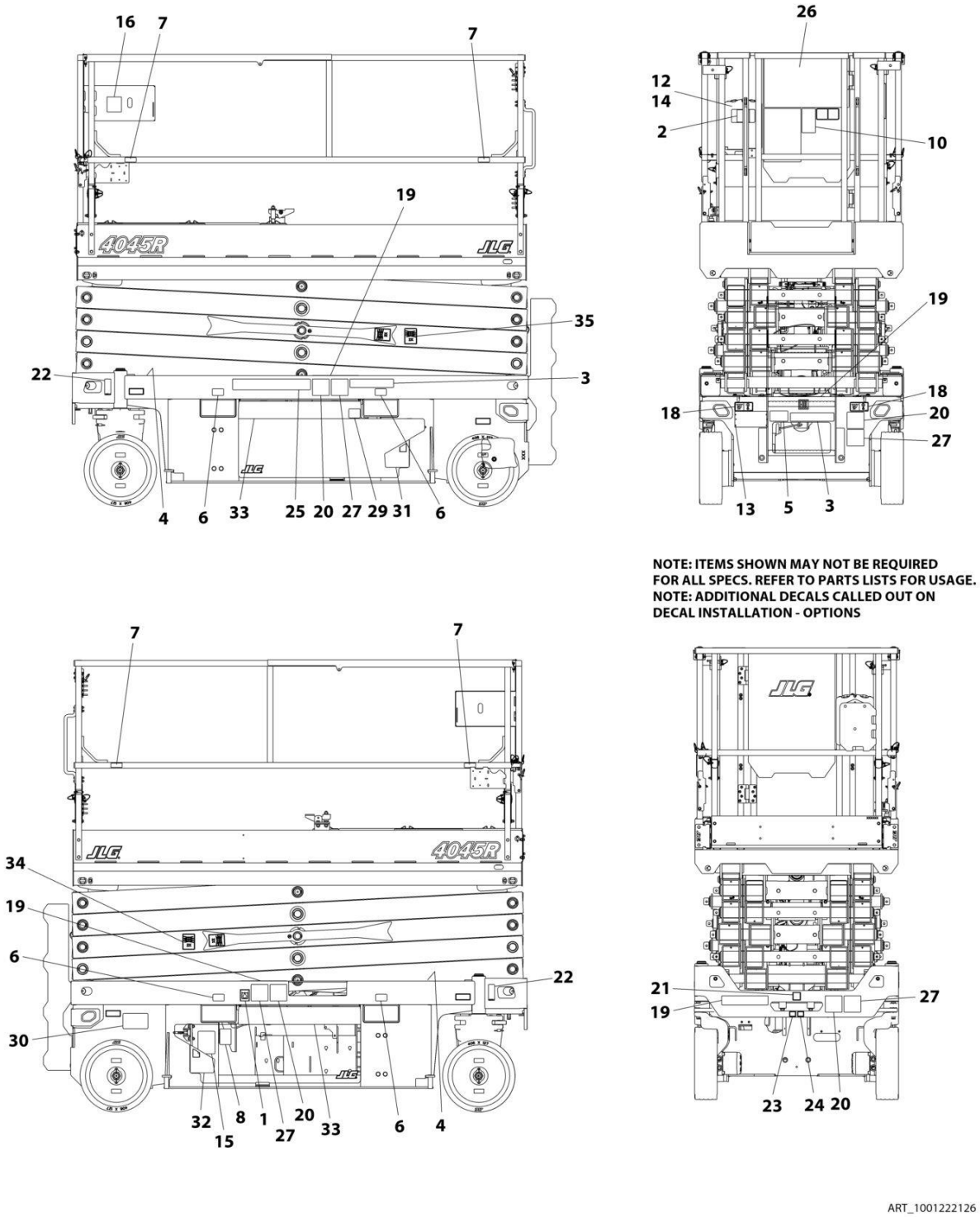

https://truckmanualshub.com/

FIGURE 8-5. DECAL INSTALLATION (CHINA SPECS)

ITEM	PART NUMBER	QTY	DESCRIPTION	REV
	1001222126	Ref	DECAL INSTALLATION (CHINA SPECS)	C
	1001217031	Ref	DECAL REFERENCE CHART	F
1	1701504	1	Decal - Hydraulic Oil	
2	1701640	1	Decal - Manual	
3	1704344	2	Decal - Warning Battery Ventilation	
4	1703819	4	Decal - Direction Arrow	
5	1703822	1	Decal - Manual Descent Instruction	
6	1704016	4	Decal - Forklift	
7	1704277	4	Decal - Lanyard Attach	
8	1704412	1	Decal - Hydraulic Oil	
10	1705946	1	Decal - Legend	
12	2080040	3	Fastener	
13	2080057	4	Fastener	
14	8990147	1	Box, Manual	
16	1001132359	1	Decal - Control Box Locate	
18	1001162864	2	Decal - Lift Up/Tie Down	
19	1001215752	4	Decal - Crushing Hazard	
20	1001211779	4	Decal - Electrocution	
21	1001212290	1	Decal - Tie Down	
22	1001213442	2	Decal - Lift and Tie Down	
23	1001212292	1	Decal - No Lifting	
24	1001212293	1	Decal - No Forklift	
25	1001146794	1	Decal - Battery/Charger Service	
26	1705195	1	Decal - Danger/Warning	
27	1001215747	4	Decal - Danger Electrocution	
29	1702155	1	Decal - Battery Disconnect	
30	1001224051	1	Decal - Yearly Inspection	
31	1001225620	1	Decal - Model Designation (RH)	
32	1001225621	1	Decal - Model Designation (LH)	
33	1001225622	2	Decal - Black Strip	
34	1001228641	2	Decal - Safety Prop (RH)	
35	1001228642	2	Decal - Safety Prop (LH)	

https://truckmanualshub.com/

FIGURE 8-6. DECAL INSTALLATION (CSA SPECS)

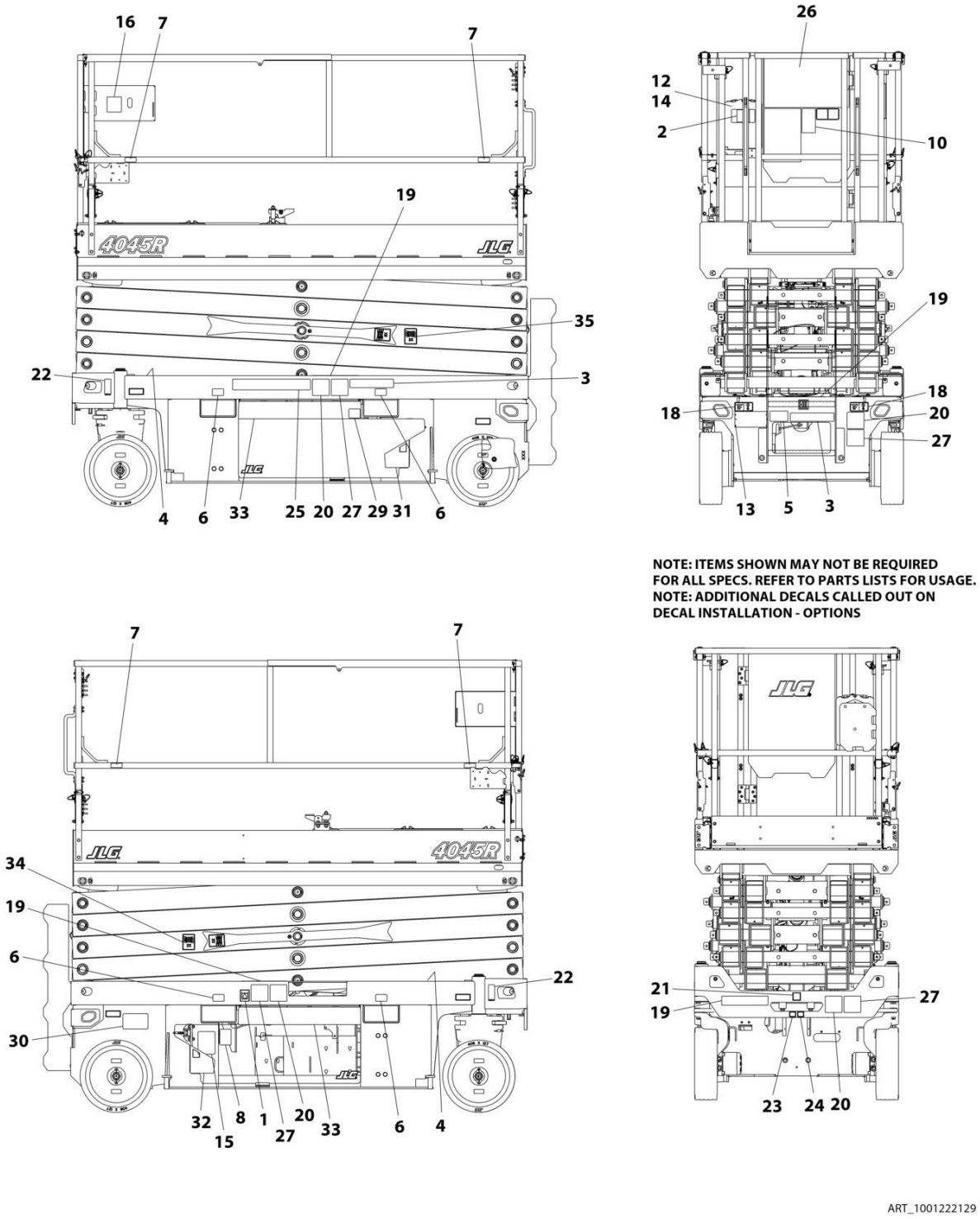

https://truckmanualshub.com/

FIGURE 8-6. DECAL INSTALLATION (CSA SPECS)

ITEM	PART NUMBER	QTY	DESCRIPTION	REV
	1001222129	Ref	DECAL INSTALLATION (CSA SPECS)	C
	1001217031	Ref	DECAL REFERENCE CHART	F
1	1701504	1	Decal - Hydraulic Oil	
2	1701640	1	Decal - Manual	
3	1704340	2	Decal - Warning Battery Ventilation	
4	1703819	4	Decal - Direction Arrow	
5	1703822	1	Decal - Manual Descent Instruction	
6	1704016	4	Decal - Forklift	
7	1704277	4	Decal - Lanyard Attach	
8	1704412	1	Decal - Hydraulic Oil	
10	1705723	1	Decal - Legend	
12	2080040	3	Fastener	
13	2080057	4	Fastener	
14	8990147	1	Box, Manual	
15	1001131270	1	Decal - Patent	
16	1001132359	1	Decal - Control Box Locate	
18	1001162864	2	Decal - Lift Up/Tie Down	
19	1001215755	4	Decal - Crushing Hazard	
20	1001211779	4	Decal - Electrocution	
21	1001212290	1	Decal - Tie Down	
22	1001213442	2	Decal - Lift and Tie Down	
23	1001212292	1	Decal - No Lifting	
24	1001212293	1	Decal - No Forklift	
25	1001146794	1	Decal - Battery/Charger Service	
26	1704684	1	Decal - Danger/Warning	
27	1001215749	4	Decal - Danger Electrocution	
29	1702155	1	Decal - Battery Disconnect	
30	1001223971	1	Decal - Yearly Inspection	
31	1001225620	1	Decal - Model Designation (RH)	
32	1001225621	1	Decal - Model Designation (LH)	
33	1001225622	2	Decal - Black Strip	
34	1001228641	2	Decal - Safety Prop (RH)	
35	1001228642	2	Decal - Safety Prop (LH)	

https://truckmanualshub.com/

FIGURE 8-7. DECAL INSTALLATION (KOREAN SPECS)

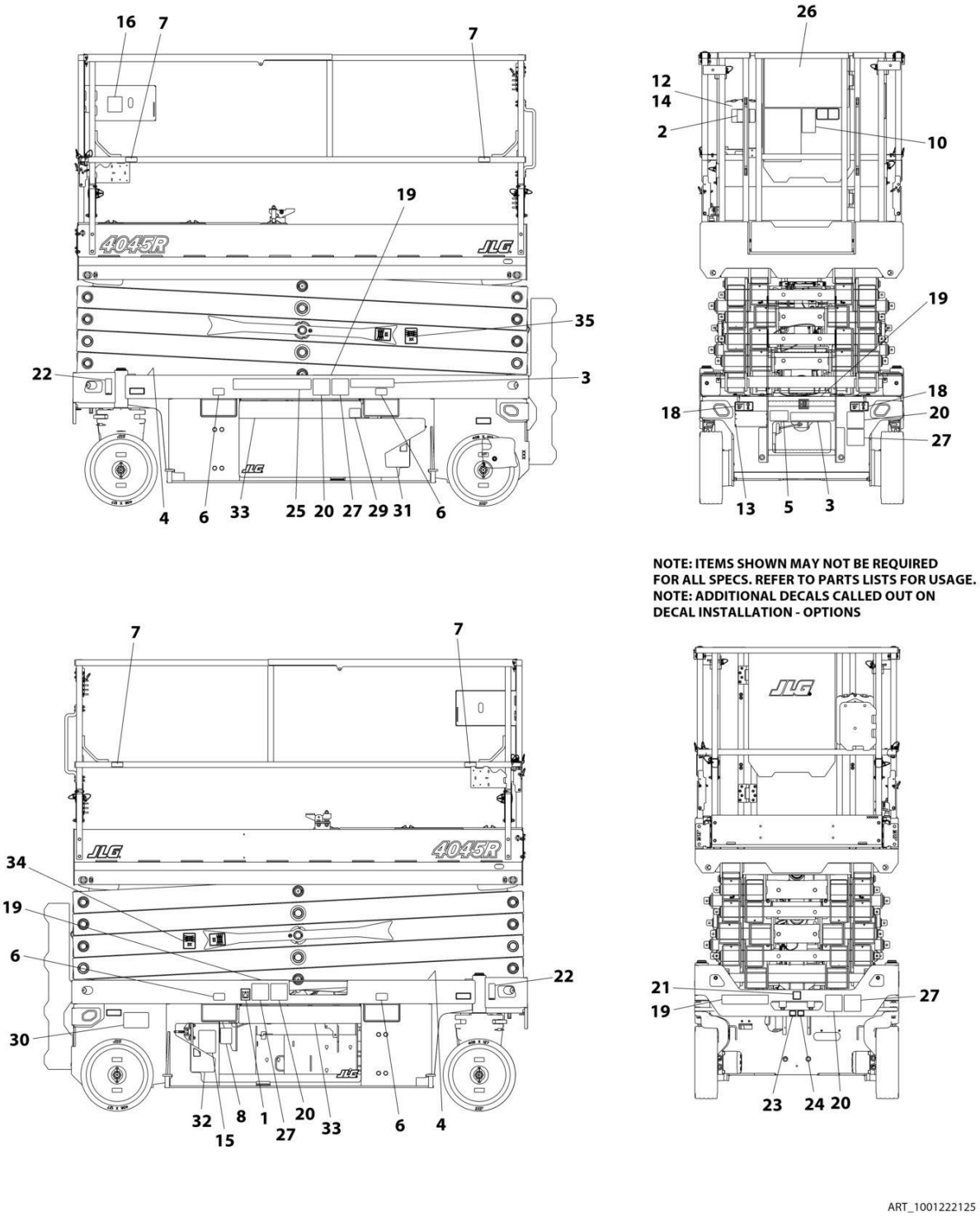

https://truckmanualshub.com/

FIGURE 8-7. DECAL INSTALLATION (KOREAN SPECS)

ITEM	PART NUMBER	QTY	DESCRIPTION	REV
	1001222125	Ref	DECAL INSTALLATION (KOREAN SPECS)	C
	1001217031	Ref	DECAL REFERENCE CHART	F
1	1701504	1	Decal - Hydraulic Oil	
2	1701640	1	Decal - Manual	
3	1707022	2	Decal - Warning Battery Ventilation	
4	1703819	4	Decal - Direction Arrow	
5	1703822	1	Decal - Manual Descent Instruction	
6	1704016	4	Decal - Forklift	
7	1704277	4	Decal - Lanyard Attach	
8	1704412	1	Decal - Hydraulic Oil	
10	1706057	1	Decal - Legend	
12	2080040	2	Fastener	
13	2080057	4	Fastener	
14	8990147	1	Box, Manual	
16	1001132359	1	Decal - Control Box Locate	
18	1001162864	2	Decal - Lift Up/Tie Down	
19	1001215751	4	Decal - Crushing Hazard	
20	1001211779	4	Decal - Electrocution	
21	1001212290	1	Decal - Tie Down	
22	1001213442	2	Decal - Lift and Tie Down	
23	1001212292	1	Decal - No Lifting	
24	1001212293	1	Decal - No Forklift	
25	1001146794	1	Decal - Battery/Charger Service	
26	1001162115	1	Decal - Danger/Warning	
27	1001215750	4	Decal - Danger Electrocution	
29	1702155	1	Decal - Battery Disconnect	
30	1001224048	1	Decal - Yearly Inspection	
31	1001225620	1	Decal - Model Designation (RH)	
32	1001225621	1	Decal - Model Designation (LH)	
33	1001225622	2	Decal - Black Strip	
34	1001228641	2	Decal - Safety Prop (RH)	
35	1001228642	2	Decal - Safety Prop (LH)	

https://truckmanualshub.com/

FIGURE 8-8. DECAL INSTALLATION (LATIN AMERICAN SPECS)

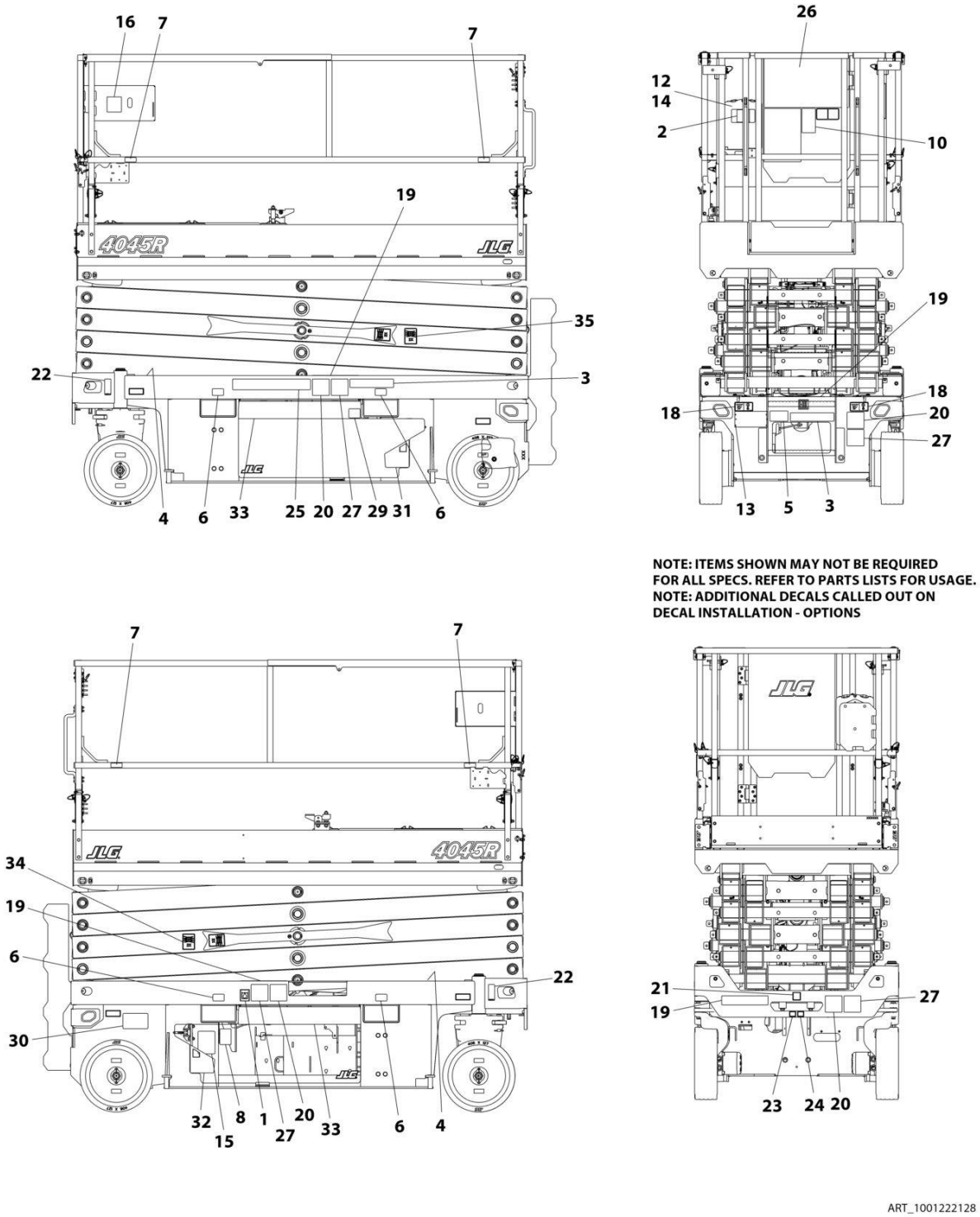

https://truckmanualshub.com/

FIGURE 8-8. DECAL INSTALLATION (LATIN AMERICAN SPECS)

ITEM	PART NUMBER	QTY	DESCRIPTION	REV
	1001222128	Ref	DECAL INSTALLATION (LATIN AMERICAN SPECS)	C
	1001217031	Ref	DECAL REFERENCE CHART	F
1	1701504	1	Decal - Hydraulic Oil	
2	1701640	1	Decal - Manual	
3	1704339	2	Decal - Warning Battery Ventilation	
4	1703819	4	Decal - Direction Arrow	
5	1703822	1	Decal - Manual Descent Instruction	
6	1704016	4	Decal - Forklift	
7	1704277	4	Decal - Lanyard Attach	
8	1704412	1	Decal - Hydraulic Oil	
10	1705720	1	Decal - Legend	
12	2080040	3	Fastener	
13	2080057	4	Fastener	
14	8990147	1	Box, Manual	
16	1001132359	1	Decal - Control Box Locate	
18	1001162864	2	Decal - Lift Up/Tie Down	
19	1001215754	4	Decal - Crushing Hazard	
20	1001211779	4	Decal - Electrocution	
21	1001212290	1	Decal - Tie Down	
22	1001213442	2	Decal - Lift and Tie Down	
23	1001212292	1	Decal - No Lifting	
24	1001212293	1	Decal - No Forklift	
25	1001146794	1	Decal - Battery/Charger Service	
26	1704691	1	Decal - Danger/Warning	
27	1001215748	4	Decal - Danger Electrocution	
29	1702155	1	Decal - Battery Disconnect	
30	1001224049	1	Decal - Yearly Inspection	
31	1001225620	1	Decal - Model Designation (RH)	
32	1001225621	1	Decal - Model Designation (LH)	
33	1001225622	2	Decal - Black Strip	
34	1001228641	2	Decal - Safety Prop (RH)	
35	1001228642	2	Decal - Safety Prop (LH)	

https://truckmanualshub.com/

FIGURE 8-9. DECAL INSTALLATION - OPTIONS

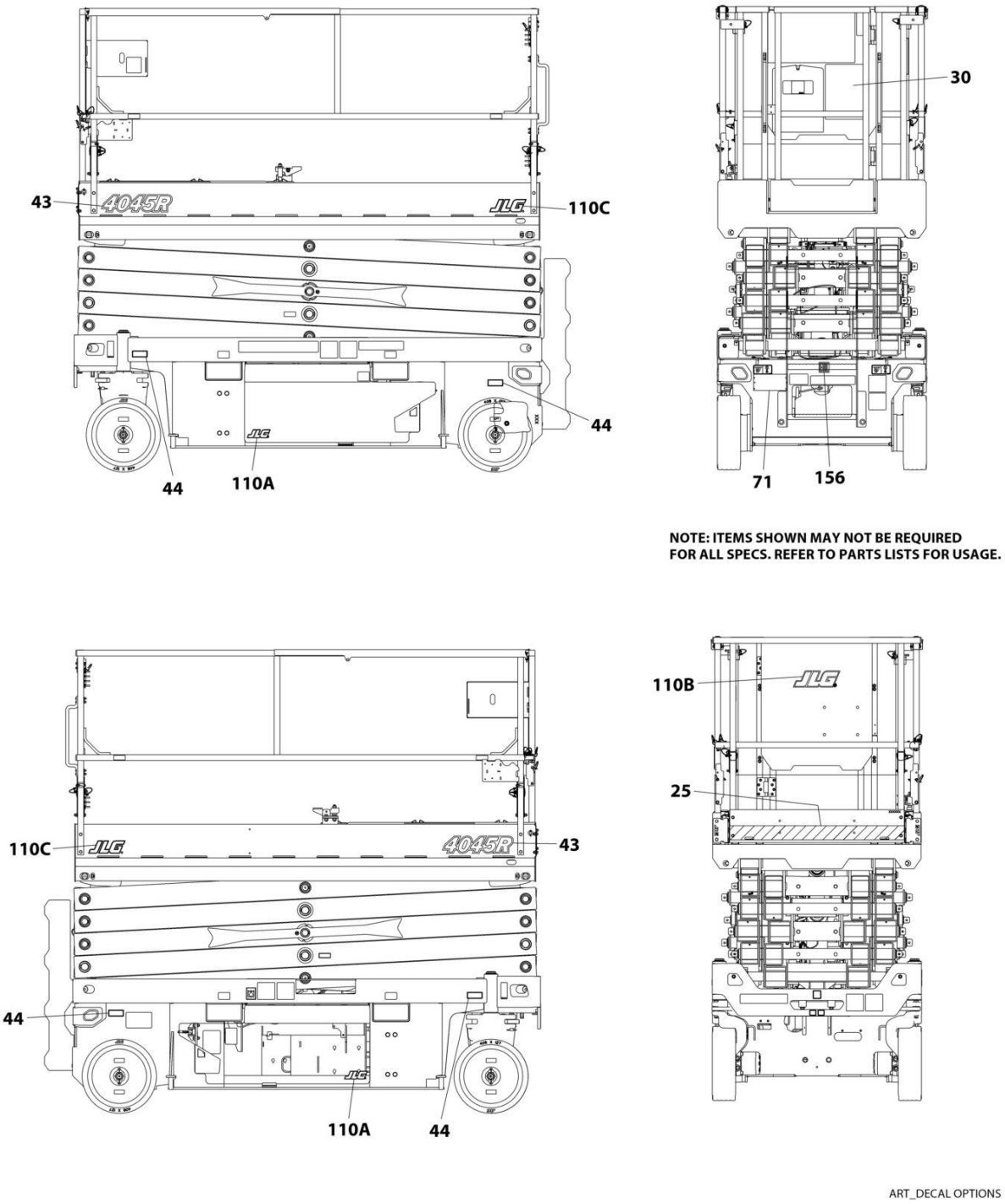

https://truckmanualshub.com/

FIGURE 8-9. DECAL INSTALLATION - OPTIONS

ITEM	PART NUMBER	QTY	DESCRIPTION	REV
		Ref	DECAL INSTALLATION - OPTIONS	
25	1001217894	Ref	Corner Stripes Installation	
25	4420051	62 in/ 156cm	Tape, Safety	
30		Ref	Decal - Capacity Options	
30	1001220378	1	Decal - Capacity (All Specs except Australian & Japanese Specs)	
30	1001229804	1	Decal - Capacity (Australian Specs)	
30	1001231228	1	Decal - Capacity (Japanese Specs)	
43	1001220380	2	Decal - 4045R	
44	1001224553	4	Decal - Maximum Tire Load	
71	See Note	NSS	Decal - Manufacturers Serial Number (Note: Not Available for Purchase)	
110	1001224578	Ref	JLG Decals Installation	
110A	1703177	2	Decal - JLG	
110B	1705754	1	Decal - JLG	
110C	1705781	2	Decal - JLG	
156	1001173703	1	Decal - EAC (Russian/CIS Specs)	

https://truckmanualshub.com/

https://truckmanualshub.com/

SECTION 9 - RECOMMENDED SERVICE PARTS STOCK

https://truckmanualshub.com/

FIGURE 9-1. RECOMMENDED SERVICE PARTS STOCK

ITEM	PART NUMBER	QTY	DESCRIPTION	REV
		Ref	Note: The following list will service one machine (built to current production per date on the front cover) with emergency repair parts which can be installed in the field. Parts from the list should be replaced when inventory is depleted to keep service parts stock supplied. For further information, contact your JLG dealer or the JLG Industries Parts Department.	
		Ref	STANDARD PARTS	
	70005423	6	Hydraulic Filter Service Kit	
	70006297	1	Coil	
	3740150	1	Relay	
	70005893	1	Coil	
	4360328	1	Switch, Toggle	
	4360469	1	Switch, Key (All Specs except CE Specs)	
	2860030	1	Key, Replacement	
	4360475	1	Switch, Mushroom	
	2400087	2	Fuse - 300Amp	
	3080007	1	Magnet, Latch	
	1600402	1	Controller, Drive/Steer	
	4360345	1	Switch, Toggle	
	1001200633	1	Switch, Push Button	
	8229242	2	Fuse 5Amp	
	70006335	1	Coil	
		Ref	VARIABLE PARTS	
	1001203871	1	Switch, Roller	
	1001186466	1	Sensor, Tilt	
	1001200629	1	Module, Control	
	1001216062	1	Module, Power	
	4360336	1	Switch, Toggle (Machines with Inverter)	
	1001146963	1	Sensor, Angle	
	1001224873	1	Module, Platform	
	1001181045	1	Breaker 30mAmp/16Amp (CE Specs Machines)	
	1001189171	1	Breaker 30mAmp (CE Specs Machines)	
	1001189172	1	Breaker 16Amp Double (CE Specs Machines)	

https://truckmanualshub.com/

SECTION 10 - SPECIAL OPTIONS

https://truckmanualshub.com/

FIGURE 10-1. SPECIAL OPTIONS

ITEM	PART NUMBER	QTY	DESCRIPTION	REV
		Ref	Note: This list is to accommodate machines ordered with special equipment. Options may not be applicable to all models. For more specific parts information contact the JLG Parts Department.	
		Ref	SPECIAL OPTIONS	
	1001209921	Ref	Antivandalism Package	
	1001225173	Ref	Anti-Vandalism Add-on Kit	
	1001225169	Ref	Beacon Add-on Kit (Single)	
	1001225170	Ref	Beacon Add-on Kit - (Dual)	
		Ref	ClearSky Installation Options:	
	1001229107	Ref	ClearSky Installation - 3 Wire (ANSI & CSA Specs)	
	1001233237	Ref	ClearSky Installation - 3 Wire (ANSI Export & CE Specs)	
	1001235697	Ref	ClearSky Installation - Canbus (ANSI & CSA Specs)	
	1001236982	Ref	ClearSky Installation - Canbus (ANSI Export & CE Specs)	
	1001224582	Ref	Customer Supplied Decal Installations	
	1001226696	Ref	Decal - Blueline Rentals	
	1001236983	Ref	Decal - ClearSky	
	1001226693	Ref	Decal - H&E	
	1001232109	Ref	Decal - Herc	
	1001226691	Ref	Decal - Hertz Canada	
	1001232110	Ref	Decal - Neff Installation	
	1001226690	Ref	Decal - Sunbelt Rentals	
	1001226694	Ref	Decal - Sunstate Equipment	
	1001237009	Ref	Decal - Synergy Equipment Installation	
	1001235126	Ref	Decal – Thompson Cat Rental	
	1001226695	Ref	Decal - Titan Rentals	
	1001226689	Ref	Decal - United Rentals	
	1001216582	Ref	Drive Motor Covers installation	
		Ref	Electrical Connector Kits	
	1001148902	Ref	Amp/Tyco Electrical Connector Kit	
	1001148903	Ref	Deutsch DT Electrical Connector Kit	
	1001148904	Ref	Deutsch HD Electrical Connector Kit	
	1001148905	Ref	Packard Electrical Connector Kit	
	1001148906	Ref	Various Electrical Connector Kit	
	1001218728	Ref	Fire Extinguisher Installation	
		Ref	Fluid Options	
	2300014	Ref	Hydraulic Fluid - Mobil 424 (Machines with Standard Oil)	
	2300042	Ref	Hydraulic Fluid - Mobil EAL H 32 (Machines with Biodegradeable Oil)	
	2300028	Ref	Hydraulic Fluid - Mobil DTE 10 XL15 (Cold Weather Conditions)	
	1001215448	Ref	Footswitch Installation (ANSI Export & Japanese Specs Only)	
	1001234379	Ref	Frame Cover Upgrade Kit	
	1001232356	Ref	Ground Control Panel Cover Add-on Kit	
	1001225172	Ref	Inverter Add-on Kit (ANSI USA Specs Only)	
	1001226903	Ref	Low Height Restriction System Installation	
	1001161710	Ref	Switch, Toggle	
	1001229728	Ref	Overhead Protection Add-on Kit (ANSI Export Specs Only)	
	1001231309	Ref	Platform Extension Deployment Handles Add-on Kit	
	1001223283	Ref	Platform Gate Latch (Magnetic) Installation	
	1001214226	Ref	Platform Worklight Installation	

https://truckmanualshub.com/

ITEM	PART NUMBER	QTY	DESCRIPTION	REV
	1001225171	Ref	Platform Work Lights Add-on Kit	
	1001224583	Ref	Service Kits List	E
		Ref	Soft-Touch Installation Options:	
	1001224567	Ref	Soft-Touch Installation (With Switches & Without Padding)	
	1001224566	Ref	Soft-Touch Installation (With Switches & With Padding) (Tube-in-Tube Extension)	
	1001214272	Ref	Soft-Touch Installation (Without Switches & With Padding) (Tube-in-Tube Extension)	
	1001220127	Ref	Soft-Touch Installation (Without Switches & With Padding) (Side-by-Side Extension)	
	1001228383	Ref	Telematics Installation (Customer Supplied)	
	1001210089	Ref	Telematics - Cat	
	1001228363	Ref	Telematics - Herc	
	1001209282	Ref	Telematics - Loxam	
	1001210090	Ref	Telematics - Riwal	
	1001195610	Ref	Telematics - United Rentals - M6	
	1001214463	Ref	Telematics - United Rentals - M8	
		Ref	Tools For Service:	
	2901443	1	Analyzer Kit	
	1001232474	1	Bench-Top R-Scissors Harness	
	8896941	1	Wire Stripper	
	7002821	1	Wire Crimper (To Install Wire Ends to Wires)	
	7002823	1	Pin/Socket Extractor - Universal (To Remove Pins/Sockets from Connectors)	
	4460467	1	Extractor - 16-18 Gauge (For Removal Pins/Sockets from Deutsch Connectors)	
	4460510	1	Extractor - 12-14 Gauge (For Removal of Pins/Sockets from Deutsch Connectors)	
	7002822	1	Screwdriver, Potentiometer (To Adjust Drive Controllers)	
	7016654	1	Screwdriver, Magnetic	
	7004275	1	Seal Installation Tool - 1in	
	7004276	1	Seal Installation - 1-1/2in	
	7002826	1	Seal Installation Tool - 2in	
	1001225174	Ref	Welder Add-on Kit (Quik Welder)	

https://truckmanualshub.com/

https://truckmanualshub.com/

PART NUMBER INDEX

https://truckmanualshub.com/

PART NUMBER INDEX

0100011....11, 13, 19, 21, 57, 75, 81, 85, 91, 93, 95
0100051.....67, 69, 71
0140030.....99
0140043.....61, 63
0275216.....135, 181
0275217.....137, 183
0275452.....139, 185
0275453.....141, 187
0275454.....143, 189
0440223.....103
0440266.....81
0440267.....81, 123
0480100.....107, 109
0630473.....99
0630586.....61, 63
0630587.....61, 63, 73
0700408.....63
0700410.....35, 43
0700416.....39, 47
0700610.....103
0700612.....19, 21, 75
0700614.....95
0700616.....117
0700617.....93
0700618.....93, 95
0700620.....97
0700621.....93, 97
0700812.....129
0700814.....75, 81
0700815.....19
0700817.75, 97, 107, 109
0700818.....93, 95, 97
0700819.....129
0700823.....19
0700825.....57
0700835.....99
0701014.....81
0701015.....80
0701016.....81
0701019.....85, 117
0701022.....80
0701024.....80, 85
0701025.....80
0701026.....89
0701029.....80
0701030.....80
0711221.....11
0760408....133, 135, 137, 139, 141, 143, 145
0760606.....93, 95
0760607.....27
0760608.....95
0760610....23, 25, 27, 29, 31, 33, 61, 63, 73, 99, 105, 133, 135, 137, 139, 141, 143, 145, 147
0760612....23, 25, 27, 29, 31, 33, 51, 61, 63, 67, 71
0760810.....57, 89, 91, 93
0760812.....57, 91
0760818.....129
0760822.....129
0760827.....57
0761014..... 57, 89, 91
0761015..... 53
0761218001..... 75
0761224..... 75
0861527..... 111
0861731... 179, 185, 187, 189
0861781..... 181, 183
0861880..... 149
0940071..... 75
0962257..... 80
0962272..... 81, 121
0962474..... 81
1001091102... 19, 35, 39, 43, 47, 63
1001094312..... 80
1001096653..... 80
1001098828..... 85
1001100341..... 181
1001100342..... 183
1001100345..... 185
1001100346..... 189
1001100347..... 187
1001101540..... 73
1001102258..... 133, 135, 137, 139, 141, 143, 145, 147
1001102489... 23, 25, 27, 29, 31, 33
1001103012..... 153
1001107854..... 153
1001110302..... 19
1001113961..... 153
1001116812..... 153
1001117000..... 153
1001118387..... 153
1001120204..... 135, 137, 139, 141, 143
1001120205..... 149, 151
1001125483..... 73
1001125677..... 153
1001130220..... 99
1001130590..... 61, 63
1001131270..... 193, 203
1001132358..... 99
1001132359..... 193, 195, 197, 199, 201, 203, 205, 207
1001132361..... 99
1001136757..... 73
1001137263..... 129, 157, 159, 161, 163, 165, 167
1001137675..... 89
1001142173..... 73
1001142174..... 73
1001143009..... 73
1001143010..... 73
1001143501..... 129
1001143645..... 129
1001144296..... 153
1001146794..... 193, 195, 197, 201, 203, 205, 207
1001146795..... 199
1001146963..... 80, 212
1001148902..... 214
1001148903..... 214
1001148904..... 214
1001148905..... 214
1001148906..... 214
1001151629..... 153
1001152483..... 151
1001153195..... 80
1001153785..... 11
1001157050..... 113
1001157513..... 73
1001157547..... 73
1001157790..... 73
1001161710..... 214
1001162115..... 205
1001162864..... 193, 195, 197, 199, 201, 203, 205, 207
1001162886..... 153
1001162887..... 153
1001163178..... 11, 125
1001163340..... 153
1001173703..... 209
1001174673..... 81
1001181045..... 149, 212
1001182806..... 51
1001186235..... 93
1001186466..... 21, 212
1001187587 . 93, 95, 103, 111
1001187816..... 145
1001188116..... 145
1001189171..... 151, 212
1001189172..... 151, 212
1001191139... 35, 39, 43, 47
1001192401..... 153
1001195610..... 215
1001197396..... 11
1001200561.... 23, 25, 27
1001200629.. 61, 63, 212
1001200631..... 61, 63
1001200632..... 65
1001200633..... 99, 212
1001200740..... 80
1001200812..... 157, 159
1001200819..... 99, 177
1001201885..... 177
1001202184..... 161, 163
1001202773..... 13
1001202851..... 57
1001202987..... 19
1001202999..... 19
1001203869..... 19
1001203870..... 19
1001203871..... 19, 212
1001203872..... 19
1001205345..... 80
1001205409..... 153
1001205410..... 153
1001205411..... 153
1001205412..... 153
1001205422..... 89
1001205598..... 31, 33
1001206995..... 29
1001207009.... 23, 25, 27
1001207173..... 153
1001207214..... 61, 63
1001207215.....61, 63
1001207293.....65
1001207920.....25
1001207970.....29
1001207973.....33
1001207974.....23, 31
1001208852.....91
1001209018.....141
1001209256.....91
1001209282.....215
1001209595.....99
1001209596.....99
1001209682.....61, 63
1001209921.....214
1001209953.....129
1001210064.....89
1001210089.....215
1001210090.....215
1001210436.....99
1001210440.....73
1001210605.....73
1001210881.....73
1001210882.....73
1001210966.....61, 63
1001211677.....81
1001211775.....153
1001211777.....193
1001211779.....193, 201, 203, 205, 207
1001211951.....81
1001212035.....177
1001212036.....177
1001212187.....17
1001212284.....80, 81
1001212290.....193, 195, 197, 199, 201, 203, 205, 207
1001212292.....193, 195, 197, 199, 201, 203, 205, 207
1001212293.....193, 195, 197, 199, 201, 203, 205, 207
1001212294.....57
1001212482.....80, 121
1001212483.....80, 123
1001212768.....81
1001212795.....82
1001212829.....82
1001212958.....82
1001212963.....82
1001212964.....82
1001212967.....82
1001212970.....82
1001212971.....82
1001212972.....82
1001213036.....57
1001213137.....80
1001213264.....13, 15
1001213267.....89
1001213268.....91
1001213269.....95
1001213270.....93
1001213275.....89
1001213393.....93, 95
1001213394.....93, 95

https://truckmanualshub.com/

1001213397 ..... 93, 95
1001213403 95
1001213407 95
1001213409 95
1001213416 95
1001213442 ..... 193, 195, 197, 199, 201, 203, 205, 207
1001213470 91
1001213550 91
1001213590 19
1001213591 19
1001213595 19
1001213597 19
1001213747 11
1001213815 ..... 57, 129
1001213816 13
1001213838 91
1001213875 57
1001213884 93
1001213886 99
1001213915 93
1001213916 93
1001213926 11
1001213928 17
1001213931 93
1001213945 ..... 111, 157, 159, 161, 163, 165, 167
1001214024 11
1001214088 ..... 61, 63
1001214150 51
1001214151 99
1001214152 11
1001214195 ... 23, 25, 27, 29, 31, 33
1001214211 35
1001214212 43
1001214214 25
1001214215 73
1001214217 21
1001214219 53
1001214226 214
1001214228 111
1001214229 107
1001214268 89
1001214272 215
1001214274 103
1001214309 71
1001214442 157
1001214443 161
1001214444 165
1001214445 167
1001214446 133
1001214447 147
1001214450 139
1001214451 141
1001214452 143
1001214453 135
1001214456 137
1001214457 145
1001214463 215
1001214526 19
1001214528 19
1001214534 19
1001214596 .. 61, 63, 153
1001214625 80
1001214641 80
1001214644 80
1001214645 80
1001214646 81
1001214648 81
1001214649 81
1001214650 81
1001214689 81
1001214810 75
1001214875 57
1001214876 57
1001214877 ..... 67, 69, 71
1001214878 ..... 67, 69, 71
1001214879 ..... 67, 69, 71
1001214880 73
1001214907 81
1001214911 71
1001214913 67
1001214915 69
1001214924 99
1001214980 69
1001214981 67
1001214994 ..... 73, 169
1001215074 ..... 23, 25, 27
1001215075 ..... 29, 31, 33
1001215215 73
1001215216 .... 43, 45, 47, 49
1001215433 ..... 57, 59
1001215434 57
1001215446 97
1001215448 214
1001215732 ..... 157, 159, 161, 163, 165, 167
1001215747 201
1001215748 ..... 197, 207
1001215749 203
1001215750 205
1001215751 205
1001215752 201
1001215754 207
1001215755 203
1001215790 ..... 81, 89
1001215953 19
1001216062 ... 61, 63, 212
1001216353 75
1001216409 ..... 67, 69, 71
1001216410 ..... 67, 69, 71
1001216411 ..... 67, 69, 71
1001216417 ..... 67, 69, 71
1001216582 214
1001216593 ..... 81, 175
1001216594 ..... 81, 171
1001216595 ..... 81, 173
1001216648 197
1001216650 197
1001216690 81
1001216691 81
1001216779 105
1001216781 81
1001216792 81
1001216808 81
1001216816 105
1001216823 97
1001217031 ..... 193, 195, 197, 199, 201, 203, 205, 207
1001217059 21
1001217110 81
1001217164 ..... 149, 151
1001217216 53
1001217386 129
1001217445 73
1001217457 81
1001217458 75
1001217464 75
1001217466 81
1001217492 61
1001217894 209
1001217916 75
1001218048 75
1001218159 129
1001218160 129
1001218161 129
1001218162 129
1001218163 129
1001218165 129
1001218167 129
1001218168 129
1001218169 129
1001218170 129
1001218181 75
1001218190 115
1001218263 95
1001218264 93
1001218285 99
1001218307 19
1001218563 75
1001218573 75
1001218696 81
1001218728 214
1001218851 23
1001218933 33
1001218989 31
1001219018 ..... 139, 151
1001219041 ..... 135, 137, 143, 149
1001219077 29
1001219133 113
1001219319 113
1001219333 111
1001219596 39
1001219597 47
1001219622 103
1001219670 103
1001219740 111
1001219766 81
1001219828 75
1001219829 75
1001219834 81
1001219835 81
1001220127 215
1001220144 81
1001220158 111
1001220378 209
1001220380 209
1001220407 81
1001220766 .... 39, 41, 47, 49
1001220771 115
1001220889 99
1001220890 115
1001220891 105
1001220892 107
1001220893 99
1001220894 103
1001220904 ..... 67, 71
1001220905 ..... 67, 71
1001221244 117
1001221275 117
1001221276 117
1001221949 27
1001222124 193
1001222125 205
1001222126 201
1001222127 197
1001222128 207
1001222129 203
1001222130 199
1001222131 195
1001222308 80
1001222742 ..... 93, 95
1001222861 93
1001222869 93
1001222907 93
1001222913 93
1001222914 117
1001223040 93
1001223053 93
1001223055 193
1001223073 75
1001223164 95
1001223165 93
1001223166 93
1001223171 75
1001223262 167
1001223263 165
1001223283 214
1001223446 63
1001223447 ..... 159, 163
1001223650 159
1001223651 163
1001223790 63
1001223971 203
1001224048 205
1001224049 207
1001224051 201
1001224052 197
1001224553 209
1001224566 215
1001224567 215
1001224578 209
1001224582 214
1001224583 215
1001224873 ..... 99, 212
1001225164 81
1001225169 214
1001225170 214
1001225171 215
1001225172 214
1001225173 214
1001225174 215
1001225620 ..... 193, 195, 197, 199, 201, 203, 205, 207
1001225621 ..... 193, 195, 197, 199, 201, 203, 205, 207
1001225622 ..... 193, 195, 197, 199, 201, 203, 205, 207
1001226215 85

https://truckmanualshub.com/

PART NUMBER INDEX

1001226216 85
1001226218 85
1001226219 85
1001226220 85
1001226277 117
1001226422 27
1001226689 214
1001226690 214
1001226691 214
1001226693 214
1001226694 214
1001226695 214
1001226696 214
1001226749 99
1001226901 117
1001226903 214
1001227516 80
1001227728 117
1001227855 19
1001227919 ..... 80, 81
1001227969 95
1001227972 95
1001227994 95
1001228112 99
1001228184 117
1001228363 215
1001228383 215
1001228533 80
1001228641 ..... 193, 195, 197, 199, 201, 203, 205, 207
1001228642 ..... 193, 195, 197, 199, 201, 203, 205, 207
1001229107 214
1001229522 ..... 67, 69, 71
1001229529 85
1001229728 214
1001229804 209
1001229950 85
1001229951 85
1001231228 209
1001231264 ..... 61, 63
1001231270 81
1001231309 214
1001231837 ..... 80, 81
1001231841 57
1001231890 81
1001232109 214
1001232110 214
1001232356 214
1001232474 215
1001232622 93
1001233237 214
1001233479 ..... 37, 41, 45, 49
1001233998 ..... 41, 49
1001234204 80
1001234257 75
1001234301 75
1001234379 214
1001234407 91
1001235126 214
1001235498 ..... 107, 109
1001235509 107
1001235560 97
1001235561 97
1001235697 214
1001235849 109
1001235941 107
1001236621 ..... 107, 109
1001236982 214
1001236983 214
1001237009 214
1001237911 93
1001238862 37
1001238863 45
1001238864 41
1001238865 49
1001242587 19
1001243109 129
1060379 ..... 107, 109, 115
1060908 ..... 149, 151
1060957 111
1120555 115
1320187 129
1320224 111
1321283 129
1321293 ..... 23, 25, 27, 29, 31, 33, 133, 135, 137, 139, 141, 143, 147
1321752 129
1380132 97
1580023 115
1580024 115
1600402 ..... 99, 101, 212
1671207 179
1701504 ..... 193, 195, 197, 199, 201, 203, 205, 207
1701640 ..... 193, 195, 197, 199, 201, 203, 205, 207
1702010 105
1702155 ..... 193, 195, 197, 199, 201, 203, 205, 207
1703177 209
1703464 ..... 133, 135
1703813 193
1703816 193
1703819 ..... 99, 193, 195, 197, 199, 201, 203, 205, 207
1703822 ..... 193, 195, 197, 199, 201, 203, 205, 207
1704016 ..... 193, 195, 197, 199, 201, 203, 205, 207
1704260 99
1704277 ..... 193, 195, 197, 199, 201, 203, 205, 207
1704339 207
1704340 203
1704341 197
1704344 201
1704412 ..... 193, 195, 197, 199, 201, 203, 205, 207
1704684 203
1704691 207
1704699 197
1705195 201
1705213 111
1705214 111
1705305 111
1705670 ..... 195, 199
1705671 ..... 195, 199
1705673 ..... 195, 199
1705686 193
1705720 207
1705723 203
1705726 197
1705754 ..... 111, 209
1705781 209
1705946 201
1705953 111
1705985 113
1705997 115
1706057 205
1707022 205
2080040 ..... 91, 93, 95, 193, 195, 197, 199, 201, 203, 205, 207
2080057 ..... 193, 195, 197, 199, 201, 203, 205, 207
2220346 129
2220371 ..... 59, 129
2220372 ..... 59, 129
2220373 129
2220374 59
2220415 59
2220466 129
2220473 129
2220497 129
2220502 129
2220582 ..... 59, 129
2220628 129
2221086 59
2221116 80
2300014 214
2300028 214
2300042 214
2400060 153
2400087 ..... 67, 69, 71, 212
2420172 ..... 61, 63
2560088 97
2560176 ..... 93, 95
2560190 97
2600281 ..... 93, 95
2700100 115
2860030 ..... 61, 63, 212
2901443 215
2902431 ..... 133, 179
3080007 ..... 93, 95, 212
3252507 ..... 137, 139, 141, 143, 145, 147
3271601 75
3290405 ..... 19, 35, 37, 39, 41, 43, 45, 47, 49, 63, 73, 80, 99, 133, 135, 137, 139, 141, 143, 145
3290605 ..... 21, 23, 25, 27, 29, 31, 33, 51, 61, 63, 73, 75, 80, 133, 135, 137, 139, 141, 143, 145, 147
3290606 ..... 93, 95, 97, 103, 105, 111, 117
3290801 ..... 19, 67, 69, 71
3290805 ..... 19, 57, 75, 80, 89, 107, 109, 129
3290806 ..... 93, 95, 97, 99
3291001 81
3291005 ..... 53, 80, 89, 91
3291006 ..... 85, 117
3291201 75
3291205 113
3300048 111
3310805 99
3321402 81
3331211 ..... 11, 13
3340962 80
3422219 ..... 95, 115
3422661 ..... 107, 109
3422943 ..... 80, 89
3423151 81
3423243 75
3423278 ..... 95, 99, 111, 113
3430636 19
3430813 91
3430816 89
3431212 19
3431218 ..... 11, 19
3431228 11
3450303 75
3450403 ..... 19, 89
3450404 91
3450505 ..... 11, 19
3450508 17
3460334 115
3520072 ..... 85, 93, 95, 103
3574505 105
3574506 105
3740150 ..... 61, 63, 73, 212
3760170 ..... 80, 103, 113, 115
3760217 11
3760348 75
3760387 80
3820019 97
3841143 ..... 80, 89
3841675 103
3860111 ..... 95, 97
3900355 115
3910804 ..... 61, 63
3931412 115
3931508 115
4010608 111
4010610 ..... 135, 137, 139, 141, 143
4010614 111
4031507 ..... 37, 45
4031509 99
4031511 ..... 19, 41, 49
4031512 80
4031708 ..... 21, 31, 33
4032111 113
4060803 99
4060865 ..... 39, 47
4060906 99
4160078 81
4160202 19
4160214 75
4191706 103
4220227 103
4240003 ..... 103, 115
4240017 ..... 23, 25, 27, 29, 31, 33, 61, 63, 67, 69, 71, 73, 117, 157, 159, 161, 163, 165, 167
4240018 ..... 43, 45, 47, 49, 111, 129

https://truckmanualshub.com/

4240147 19
4240165 105
4340853 115
4340854 115
4340947 103
4360155 111
4360328 ..... 61, 63, 212
4360336 ..... 73, 212
4360345 ..... 99, 212
4360469 ..... 61, 63, 212
4360475 .. 61, 63, 99, 212
4420037 105
4420051 209
4420062 ... 57, 85, 93, 95, 99, 103, 107, 109, 113
4460042 153
4460115 153
4460138 ..... 73, 133
4460183 ..... 153, 177
4460226 154
4460227 .. 23, 25, 27, 153
4460234 117
4460247 153
4460259 153
4460260 153
4460265 177
4460267 177
4460290 ..... 67, 69, 71
4460315 ..... 133, 145
4460320 154
4460328 111
4460346 179
4460418 .... 153, 169, 177
4460419 .... 153, 169, 177
4460424 ..... 23, 25, 27
4460464 ... 43, 45, 47, 49, 51, 80, 117, 154, 157, 159, 161, 163, 165, 167, 169, 173, 175, 177
4460465 ... 35, 37, 39, 41, 43, 45, 47, 49, 117, 153, 154, 157, 159, 161, 163, 165, 167, 171, 173, 175
4460466 ... 117, 154, 157, 159, 161, 163, 165, 167, 169, 171, 175, 177
4460467 215
4460496 99
4460497 99
4460510 215
4460536 117
4460539 ... 154, 165, 167, 175
4460662 ... 139, 141, 143, 179
4460722 169
4460754 ... 157, 159, 161, 163, 165, 167
4460761 153
4460779 73
4460865 ..... 47, 49
4460871 153
4460877 153
4460884 ..... 153, 175
4460891 ... 35, 37, 39, 41, 43, 45, 47, 49, 117, 154, 165, 167, 171, 173
4460894 ... 154, 157, 159, 161, 163, 165, 167, 171, 175
4460897 ... 43, 45, 47, 49, 51, 154, 165, 167, 169, 173
4460899 ..... 80, 154, 157, 159, 161, 163, 165, 167, 175
4460905 153
4460930 154
4460931 175
4460932 175
4460933 153
4460943 ... 157, 159, 161, 163, 165, 167
4460944 ... 153, 157, 159, 161, 163, 165, 167
4460956 149
4460957 149
4460968 145
4461016 177
4461023 153
4461196 181
4461198 181
4461199 183
4461201 183
4461202 185
4461205 187
4461244 185
4461245 187
4461246 189
4461249 189
4461257 ..... 135, 137
4461258 ..... 135, 137
4530021 111
4640780 129
4711400 ..... 103, 115
4711700 99
4711800 89
4740086 ..... 11, 19, 75
4740446 81
4740480 115
4750800 99
4811400 ... 37, 41, 45, 49, 73, 80, 133, 135, 137, 139, 141, 143, 145
4811700 ... 23, 25, 27, 29, 31, 33, 51, 61, 63, 73, 80, 93, 95, 97, 99, 105
4811702 ... 19, 21, 23, 25, 27, 29, 31, 33, 61, 63, 67, 71, 75, 93, 95, 97, 133, 135, 137, 139, 141, 143, 145, 147
4811900 ... 19, 57, 80, 89, 91, 93, 95, 97, 99, 129
4811902 . 19, 57, 75, 107, 109
4812000 ... 19, 57, 75, 80, 85, 89, 91, 117
4812002 53
4812100 113
4812100001 75
4812200 91
4812500 19
4845582 107
4923048 111
5241200 ..... 11, 13
5251011 75
5260600 ..... 67, 71
5271808 57
5272120 13
5272122 13
70000082 101
70000084 101
70000683 101
70000684 101
70000685 101
70000686 101
70000764 121
70001250 101
70001251 101
70001252 101
70001253 101
70003650 101
70004164 57
70004465 57
70005150 125
70005151 125
70005152 125
70005153 125
70005154 125
70005236 121
70005423 ..... 57, 212
70005664 121
70005665 123
70005807 15
70005812 15
70005813 15
70005816 57
70005891 59
70005893 ..... 59, 212
70005896 59
70005898 59
70005899 59
70005900 59
70005903 59
70005904 59
70005907 59
70005908 59
70005909 59
70005911 59
70005912 59
70005913 59
70005914 59
70005918 13
70005919 13
70006244 15
70006245 15
70006295 57
70006296 57
70006297 ..... 57, 212
70006298 57
70006299 57
70006300 59
70006301 59
70006302 59
70006316 121
70006317 121
70006318 121
70006319 121
70006320 121
70006321 121
70006322 121
70006323 121
70006325 ..... 121, 123
70006326 123
70006327 123
70006328 123
70006329 123
70006330 123
70006331 123
70006333 123
70006334 123
70006335 ..... 123, 212
70006351 57
70006352 57
70021209 59
70025605 123
70025619 ..... 121, 123
70025627 123
7002821 215
7002822 215
7002823 215
7002826 215
7004275 215
7004276 215
7006724 15
7006725 15
7012955 121
7012967 121
7016654 215
7017496 ..... 121, 123
7020175 ..... 61, 63, 99
7020176 ..... 61, 63, 99
7020218 81
7023308 15
7023310 15
7023311 15
7023315 15
7023318 15
7023319 15
7023321 15
7023322 15
7023324 15
7023328 15
7023329 15
7023407 15
7023408 15
7026174 15
7026179 15
7027365 101
7027367 101
7027765 101
7027766 101
77133139 129
8005670 113
80325 103
8229242 ..... 153, 212
8229244 153
8305919 ..... 67, 71
8406003 ..... 81, 145
85941016 73
8896941 215
8990147 ... 193, 195, 197, 199, 201, 203, 205, 207

https://truckmanualshub.com/

https://truckmanualshub.com/

3121753

An Oshkosh Corporation Company

Corporate Office
JLG Industries, Inc.
1 JLG Drive
McConnellsburg, PA 17233-9533 USA
(717) 485-5161 (Corporate)
(877) 554-5438 (Customer Support)
(717) 485-6417

Visit our website for JLG Worldwide Locations.
www.jlg.com