https://truckmanualshub.com/

Kubota

U.S.A. : **KUBOTA TRACTOR CORPORATION**
3401 Del Amo Blvd., Torrance, CA 90503, U.S.A.
Telephone : (310)370-3370
Western Division : 1175 S. Guild Avc., Lodi, CA 95240
Telephone : (209)334-9910
Central Division : 14855 FAA Blvd., Fort Worth, TX 76155
Telephone : (817)571-0900
Northern Division : 6300 at One Kubota Way, Groveport, OH 43125
Telephone : (614)835-1100
Southeast Division : 1025 Northbrook Parkway, Suwanee, GA 30024
Telephone : (770)995-8855

Canada : **KUBOTA CANADA LTD.**
5900 14th Avenue, Markham, Ontario, L3S 4K4, Canada
Telephone : (905)294-7477

France : **KUBOTA EUROPE S.A.S**
19-25, Rue Jules Vercruysse, Z.I. BP88, 95101 Argenteuil Cedex, France
Telephone : (33)1-3426-3434

Italy : **KUBOTA EUROPE S.A.S Italy Branch**
Via Grandi, 29 20068 Peschiera Borrome (MI) Italy
Telephone : (39)02-51650377

Germany : **KUBOTA (DEUTSCHLAND) GmbH**
Senefelder Str. 3-5 63110 Rodgau /Nieder-Roden, Germany
Telephone : (49)6106-873-0

U.K. : **KUBOTA (U.K.) LTD.**
Dormer Road, Thame, Oxfordshire, OX9 3UN, U.K.
Telephone : (44)1844-214500

Spain : **KUBOTA ESPAÑA S.A.**
Avenida Recomba No.5, Poligno Industrial la Laguna, Leganes, 28914 (Madrid) Spain
Telephone : (34)91-508-6442

Australia : **KUBOTA TRACTOR AUSTRALIA PTY LTD.**
25-29 Permas Way, Truganina, VIC 3029, Australia
Telephone : (61)-3-9394-4400

Malaysia : **SIME KUBOTA SDN. BHD.**
No.3 Jalan Sepadu 25/123 Taman Perindustrian Axis,
Seksyen 25, 40400 Shah Alam, Selangor Darul Ehsan Malaysia
Telephone : (60)3-736-1388

Philippines : **KUBOTA PHILIPPINES, INC.**
155 Panay Avenue, South Triangle Homes, 1103 Quezon City, Philippines
Telephone : (63)2-9201071

Taiwan : **SHIN TAIWAN AGRICULTURAL MACHINERY CO., LTD.**
16, Fengping 2nd Rd, Taliao Shiang Kaohsiung 83107, Taiwan R.O.C.
Telephone : (886)7-702-2333

Indonesia : **PT. KUBOTA MACHINERY INDONESIA**
Tower A at EightyEight@Kasablanka Lantai 16
Jalan Raya Casablanka Kav. 88, Jakarta 12870 Indonesia
Telephone : (62)-21-29568-720

Thailand : **SIAM KUBOTA CORPORATION CO., LTD.**
101/19-24 Moo 20, Navanakorn Industrial Estate, Tambon Khlongnueng, Amphur Khlongluang,
Pathumthani 12120, THAILAND
Telephone : (66)2-909-0300

Korea : **KUBOTA KOREA CO., LTD.**
106-24 Mongsan-Ri, Mankyung-Up, Kimje-City, Chonrapuk-Do, KOREA
Telephone : (82)-63-544-5822

India : **KUBOTA AGRICULTURAL MACHINERY INDIA PVT. LTD.**
Regus, Level 2 Altius, Olympia Tech Park, No.1 SIDCO Industrial Estate, Guindy, Chennai 600032, TN, India
Telephone : (91)-44-4299-4237

Vietnam : **KUBOTA VIETNAM CO., LTD.**
Lot B-3A2-CN, My Phuoc 3 Industrial Park, Ben Cat District, Binh Duong Province, Vietnam
Telephone : (84)-650-3577-507

KUBOTA Corporation

English (U.S.A.)
Code No. 6C300-6311-9

B2320・2620・2920・2320NARROW

OPERATOR'S MANUAL

KUBOTA TRACTOR

MODELS B2320 · B2620 · B2920 B2320NARROW

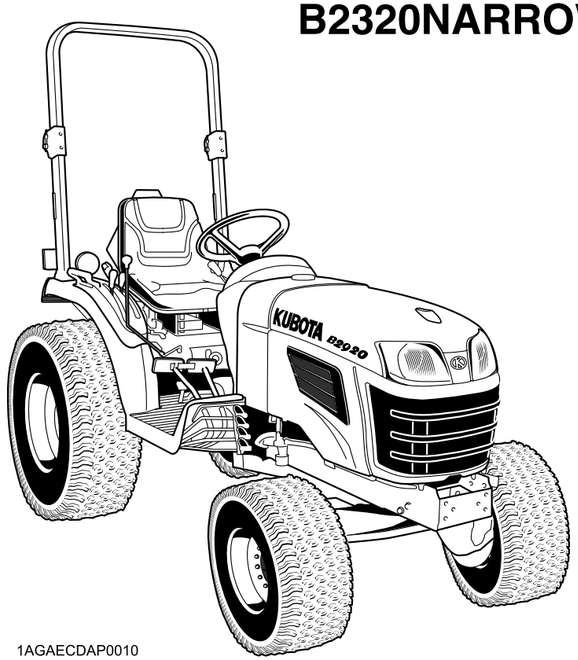

1AGAECDAP0010

PRINTED IN JAPAN

© KUBOTA Corporation 2007

READ AND SAVE THIS MANUAL

Kubota

https://truckmanualshub.com/

ABBREVIATION LIST

Abbreviations	Definitions
2WD	Two Wheel Drive
4WD	Four Wheel Drive
API	American Petroleum Institute
ASABE	American Society of Agricultural and Biological Engineers, USA
ASTM	American Society of Testing and Materials, USA
DIN	Deutsches Institut für Normung, GERMANY
DT	Dual Traction [4WD]
fpm	Feet Per Minute
GST	Glide Shift Transmission
Hi-Lo	High Speed-Low Speed
HST	Hydrostatic Transmission
m/s	Meters Per Second
PTO	Power Take Off
RH/LH	Right-hand and left-hand sides are determined by facing in the direction of forward travel
ROPS	Roll-Over Protective Structures
rpm	Revolutions Per Minute
r/s	Revolutions Per Second
SAE	Society of Automotive Engineers, USA
SMV	Slow Moving Vehicle

California Proposition 65

⚠ WARNING ⚠

Engine exhaust, some of its constituents, certain vehicle components and fluids, contain or emit chemicals known to the State of California to cause cancer and birth defects or other reproductive harm.

IMPORTANT

The engine in this machine is not equipped by the manufacturer with a standard spark arrester.
It is a violation of California Public Resource Code Section 4442 to use or operate this engine on or near any forest-covered, brush-covered land, or grass- covered land unless the exhaust system is equipped with a working spark arrester meeting state laws. Other states or federal areas may have similar laws.

KUBOTA Corporation is· · ·

Since its inception in 1890, KUBOTA Corporation has grown to rank as one of the major firms in Japan.

To achieve this status, the company has through the years diversified the range of its products and services to a remarkable extent. Nineteen plants and 16,000 employees produce over 1,000 different items, large and small.

All these products and all the services which accompany them, however, are unified by one central commitment.
KUBOTA makes products which, taken on a national scale, are basic necessities. Products which are indispensable. Products which are intended to help individuals and nations fulfill the potential inherent in their environment. KUBOTA is the Basic Necessities Giant.

This potential includes water supply, food from the soil and from the sea, industrial development, architecture and construction, and transportation.

Thousands of people depend on KUBOTA's know-how, technology, experience and customer service. You too can depend on KUBOTA.

B2320/2620/2920/2320NARROW
AR. J. 18-19. 15. K

https://truckmanualshub.com/

UNIVERSAL SYMBOLS

As a guide to the operation of your tractor, various universal symbols have been utilized on the instruments and controls. The symbols are shown below with an indication of their meaning.

- Safety Alert Symbol
- Diesel Fuel
- Fuel-Level
- Engine-Rotation Speed
- Hourmeter/Elapsed Operating Hours
- Engine Coolant-Temperature
- Parking Brake
- Battery Charging Condition
- Engine Oil-Pressure
- Turn Signal
- Engine-Stop
- OFF
- Engine-Run
- Diesel Preheat/Glow Plugs (Low Temperature Start Aid)
- Starter Control
- Power Take-Off Control-Off Position (Disengaged)
- Power Take-Off Control-On Position (Engaged)
- Differential Lock
- Position Control-Raised Position
- Position Control-Lowered Position
- Draft Control-Shallow Position
- Draft Control-Deep Position
- 3-Point Lowering Speed Control
- Remote Cylinder-Retract
- Remote Cylinder-Extend
- Hazard Warning Lights
- Master Lighting Switch
- Headlight
- Four-Wheel Drive-On
- Four-Wheel Drive-Off
- Fast
- Slow
- Read Operator's Manual
- Tractor-Forward Movement-Overhead View of Machine
- Tractor-Rearward Movement-Overhead View of Machine
- Engine Speed Control

https://truckmanualshub.com/

FOREWORD

You are now the proud owner of a KUBOTA Tractor. This tractor is a product of KUBOTA quality engineering and manufacturing. It is made of fine materials and under a rigid quality control system. It will give you long, satisfactory service. To obtain the best use of your tractor, please read this manual carefully. It will help you become familiar with the operation of the tractor and contains many helpful hints about tractor maintenance. It is KUBOTA's policy to utilize as quickly as possible every advance in our research. The immediate use of new techniques in the manufacture of products may cause some small parts of this manual to be outdated. KUBOTA distributors and dealers will have the most up-to-date information. Please do not hesitate to consult with them.

SAFETY FIRST

This symbol, the industry's "Safety Alert Symbol", is used throughout this manual and on labels on the machine itself to warn of the possibility of personal injury. Read these instructions carefully. It is essential that you read the instructions and safety regulations before you attempt to assemble or use this unit.

DANGER : Indicates an imminently hazardous situation which, if not avoided, will result in death or serious injury.

WARNING : Indicates a potentially hazardous situation which, if not avoided, could result in death or serious injury.

CAUTION : Indicates a potentially hazardous situation which, if not avoided, may result in minor or moderate injury.

IMPORTANT : Indicates that equipment or property damage could result if instructions are not followed.

NOTE : Gives helpful information.

https://truckmanualshub.com/

CONTENTS

⚠SAFE OPERATION ..... ⚠-1

SERVICING OF TRACTOR 1

SPECIFICATIONS 2
- SPECIFICATION TABLE 2
- TRAVELING SPEEDS 4

IMPLEMENT LIMITATIONS 5

INSTRUMENT PANEL AND CONTROLS 7

PRE-OPERATION CHECK 11
- DAILY CHECK 11

OPERATING THE ENGINE 12
- STARTING THE ENGINE 12
  - Block Heater (Option) 15
- STOPPING THE ENGINE 15
- WARMING UP 15
  - Warm-up Transmission Oil at Low Ambient Temperatures 15
- JUMP STARTING 16

OPERATING THE TRACTOR 17
- OPERATING NEW TRACTOR 17
  - Do not Operate the Tractor at Full Speed for the First 50 Hours 17
  - Changing Lubricating Oil for New Tractors 17
- OPERATING FOLDABLE ROPS 17
  - To Fold the ROPS 17
  - To Raise the ROPS to Upright Position 18
  - Adjustment of Foldable ROPS 19
- STARTING 19
  - Operator's Seat 19
  - Seat Belt 20
  - Head Light / Turn Signal / Hazard Light Switch 20
  - Brake Pedals (Right and Left) 21
  - Clutch Pedal 21
  - Range Gear Shift Lever (L-M-H) [HST Type] 22
  - Main Gear Shift Lever & Range Gear Shift Lever (L-M-H) [Manual Transmission Type] 22
  - Front Wheel Drive Lever 23
  - Hand Throttle Lever 23
  - Foot Throttle [Manual Transmission Type] 23
  - Parking Brake 24
  - Speed Control Pedal 24
  - Speed Set Device 25
- STOPPING 25
  - Stopping 25
- CHECK DURING DRIVING 25
  - Immediately Stop the Engine if: 25

https://truckmanualshub.com/

Easy Checker (TM) 25
Fuel Gauge 26
Coolant Temperature Gauge 26
Hourmeter / Tachometer 26
PARKING 27
Parking Brake 27
OPERATING TECHNIQUES 27
Differential Lock 27
Operating the Tractor on a Road 28
Operating on Slopes or Rough Terrain 28
Directions for Use of Power Steering 28

PTO 29
PTO OPERATION 29
PTO Gear Shift Lever 29
PTO shaft Cover and Shaft Cap 30
Stationary PTO 30

THREE-POINT HITCH & DRAWBAR 31
3-POINT HITCH 32
Selecting the holes of lifting rods and lower links 32
Selecting the Top Link Mounting Holes 32
Drawbar 32
Lifting Rod (Right) 32
Top Link 32
Check Chains 33
DRAWBAR 33
Adjusting Drawbar Length 33

HYDRAULIC UNIT 34
3-POINT HITCH CONTROL SYSTEM 34
Hydraulic Control 34
Position Control 34
Implement Lowering Limit 35
3-point Hitch Lowering Speed 35
AUXILIARY HYDRAULICS 35
Hydraulic Block Type Outlet 35
DUAL REMOTE HYDRAULIC CONTROL SYSTEM (if equipped) 37
Control Lever and Hydraulic Hose Connections 37
Loader / Remote Control Valve Lever 37
Valve Lock 38
Hydraulic Control Unit Use Reference Chart 39

TIRES, WHEELS AND BALLAST 40
TIRES 40
Inflation Pressure 40
Dual Tires 40
WHEEL ADJUSTMENT 40
Front Wheels 40
Rear Wheels 42
BALLAST 44
Front Ballast 44
Rear Ballast 45

MAINTENANCE 46
SERVICE INTERVALS 46
LUBRICANTS, FUEL AND COOLANT 47

PERIODIC SERVICE 50
HOW TO OPEN THE HOOD 50
Hood 50
Front Grille 50
Engine Side Cover 51
DAILY CHECK 51
Walk Around Inspection 51
Checking and Refueling 52
Checking Engine Oil Level 52
Checking Transmission Fluid Level 53
Checking Coolant Level 53
Cleaning Grill and Radiator Screen 54
Checking Brake Pedals and Clutch Pedal 54
Checking Gauges, Meter and Easy Checker(TM) 54
Checking Head Light, Hazard Light etc. 54
Checking Seat Belt and ROPS 54
Checking and Cleaning of Electrical Wiring and Battery Cables 55
Checking Movable Parts 55
EVERY 50 HOURS 55
Lubricating Grease Fittings 55
Checking Engine Start System 56
Checking Wheel Bolt Torque 57
EVERY 100 HOURS 58
Battery 58
Cleaning Air Cleaner Primary Element 59
Cleaning Fuel Filter 60
Adjusting Fan Belt Tension 60
Adjusting Clutch Pedal 61
Adjusting Brake Pedal 61
Checking Fuel Line 62
EVERY 200 HOURS 62
Replacing Engine Oil Filter 62
Changing Engine Oil 63
Replacing Transmission Oil Filter [HST Type] 64
Checking Radiator Hose and Clamp 65
Checking Intake Air Line 65
EVERY 400 HOURS 65
Adjusting Front Axle Pivot [4WD] 65
Changing Transmission Fluid / Replacing Hydraulic Oil Filter 66
Replacing Fuel Filter Element 67
Changing Front Axle Case Oil 67
EVERY 800 HOURS 67
Adjusting Engine Valve Clearance 67
EVERY 1500 HOURS 67
Checking Fuel Injection Nozzle Injection Pressure 67
EVERY 3000 HOURS 67
Checking Injection Pump 67
EVERY 1 YEAR 67

https://truckmanualshub.com/

Replacing Air Cleaner Primary Element and Secondary Element 67
EVERY 2 YEARS 68
Flushing Cooling System and Changing Coolant 68
Anti-Freeze 68
Replacing Radiator Hose (Water pipes) 69
Replacing Fuel Lines 69
Replacing Intake Air Line 69
SERVICE AS REQUIRED 69
Bleeding Fuel System 69
Draining Clutch Housing Water 69
Replacing Fuse 70
Replacing Light Bulb 70

STORAGE 71
TRACTOR STORAGE 71
REMOVING THE TRACTOR FROM STORAGE 71

TROUBLESHOOTING 72
ENGINE TROUBLESHOOTING 72

OPTIONS 73

APPENDICES 74
INDEX 74

https://truckmanualshub.com/

SAFE OPERATION

Careful operation is your best insurance against an accident.

Read and understand this manual carefully before operating the tractor.

All operators, no matter how much experience they may have, should read this and other related manuals before operating the tractor or any implement attached to it. It is the owner's obligation to instruct all operators in safe operation.

1. BEFORE OPERATING THE TRACTOR

1. Know your equipment and its limitations. Read this entire manual before attempting to start and operate the tractor.
2. Pay special attention to the danger, warning and caution labels on the tractor.
3. KUBOTA recommends the use of a CAB or Roll Over Protective Structures (ROPS) and seat belt in almost all applications. This combination will reduce the risk of serious injury or death, should the tractor be upset.
   If the tractor is equipped with a foldable ROPS it may be temporarily folded down only when absolutely necessary for areas with height constraints.
   (There is no operator protection provided by the ROPS in the folded position. For operator safety the ROPS should be placed in the upright and locked position and the seat belt fastened for all other operations.)
   If the CAB or ROPS is loosened or removed for any reason, make sure that all parts are reinstalled correctly before operating the tractor.
   Never modify or repair a ROPS because welding, bending, drilling, grinding, or cutting may weaken the structure.
   A damaged CAB or ROPS structure must be replaced, not repaired or revised.
   If any structural member of the CAB or ROPS is damaged, replace the entire structure at your local KUBOTA Dealer.

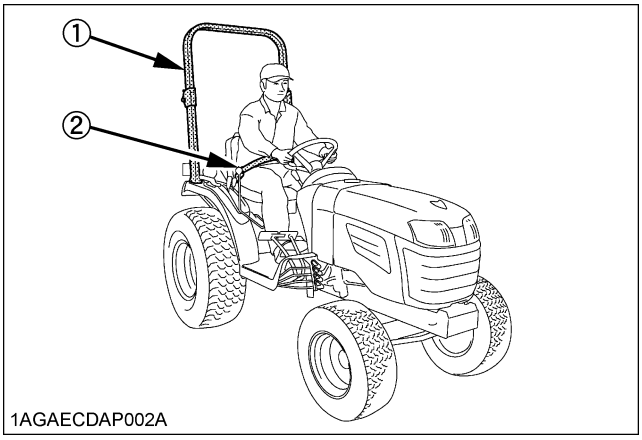

(1) ROPS
(2) Seat belt

4. Always use the seat belt if the tractor has a CAB or ROPS.
   Do not use the seat belt if a foldable ROPS is down or there is no ROPS. Check the seat belt regularly and replace if frayed or damaged.
5. Do not operate the tractor or any implement attached to it while under the influence of alcohol, medication, controlled substances or while fatigued.
6. Carefully check the vicinity before operating tractor or any implement attached to it. Check for overhead clearance which may interfere with a CAB or ROPS. Do not allow any bystanders around or near tractor during operation.
7. Before allowing other people to use your tractor, explain how to operate and have them read this manual before operation.
8. Never wear loose, torn, or bulky clothing around tractor. It may catch on moving parts or controls, leading to the risk of an accident. Use additional safety items, e.g. hard hat, safety boots or shoes, eye and hearing protection, gloves, etc., as appropriate or required.
9. Do not allow passengers to ride on any part of the tractor at anytime. The operator must remain in the tractor seat during operation.
10. Check brakes, clutch, linkage pins and other mechanical parts for improper adjustment and wear. Replace worn or damaged parts promptly. Check the tightness of all nuts and bolts regularly. (For further details, see "MAINTENANCE" section.)
11. Keep your tractor clean. Dirt, grease, and trash build up may contribute to fires and lead to personal injury.
12. Use only implements meeting the specifications listed under "IMPLEMENT LIMITATIONS" in this manual or implements approved by KUBOTA.

https://truckmanualshub.com/

13. Use proper weights on the front or rear of the tractor to reduce the risk of upsets. When using the front loader, put an implement or ballast on the 3-point hitch to improve stability. Follow the safe operating procedures specified in the implement or attachment manual.
14. The narrower the tread, the greater the risk of a tractor upset. For maximum stability, adjust the wheels to the widest practical tread width for your application. (See "TIRES, WHEELS AND BALLAST" section.)

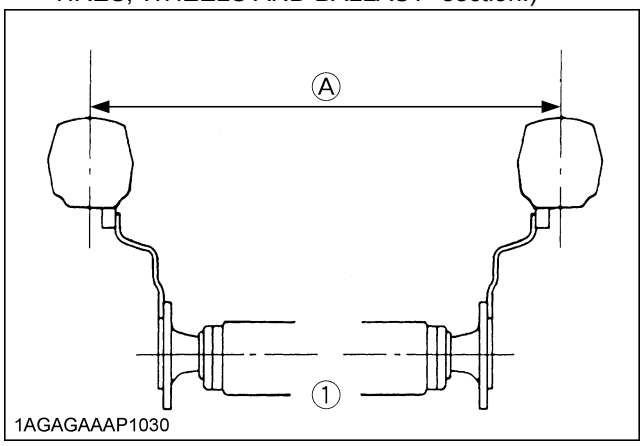

(1) Rear wheels *(A) Tread Width*

15. Do not modify the tractor. Unauthorized modification may affect the function of the tractor, which may result in personal injury.

2. OPERATING THE TRACTOR

Operator safety is a priority. Safe operation, specifically with respect to overturning hazards, entails understanding the equipment and environmental conditions at the time of use. Some prohibited uses which can affect overturning hazards include traveling and turning with implements and loads carried too high etc. This manual sets forth some of the obvious risks, but the list is not, and cannot be, exhaustive. It is the operator's responsibility to be alert for any equipment or environmental condition that could compromise safe operation.

◆ Starting

1. Always sit in the operator's seat when starting engine or operating levers or controls. Adjust seat per instructions in the operating the tractor section. Never start engine while standing on the ground.
2. Before starting the engine, make sure that all levers (including auxiliary control levers) are in their neutral positions, that the parking brake is engaged, and that both the clutch and the Power Take-Off (PTO) are disengaged or "OFF".
   Fasten the seat belt if the tractor has a CAB, a fixed ROPS or a foldable ROPS in the upright and locked position.
3. Do not start engine by shorting across starter terminals or bypassing the safety start switch. Machine may start in gear and move if normal starting circuitry is bypassed.
4. Do not operate or idle engine in a non-ventilated area. Carbon monoxide gas is colorless, odorless, and deadly.
5. Check before each use that operator presence controls are functioning correctly. Test safety systems. (See "Checking Engine Start System" in "EVERY 50 HOURS" in "PERIODIC SERVICE" section.)
   Do not operate unless they are functioning correctly.

◆ Working

1. Pull only from the drawbar. Never hitch to axle housing or any other point except drawbar; such arrangements will increase the risk of serious personal injury or death due to a tractor upset.

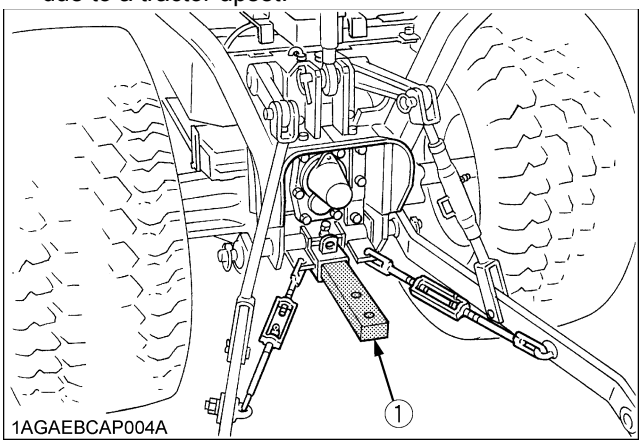

(1) Drawbar

2. Keep all shields and guards in place. Replace any that are missing or damaged.
3. Avoid sudden starts. To avoid upsets, slow down when turning, on uneven ground, and before stopping.
4. The tractor cannot turn with the differential locked and attempting to do so could be dangerous.
5. Do not operate near ditches, holes, embankments, or other ground surface features which may collapse under the tractor's weight. The risk of tractor upset is even higher when the ground is loose or wet. Tall grass can hide obstacles, walk the area first to be sure.
6. Watch where you are going at all times. Watch for and avoid obstacles. Be alert at row ends, near trees, and other obstructions.
7. When working in groups, always let the others know what you are going to do before you do it.
8. Never try to get on or off a moving tractor.
9. Do not stand between tractor and implement or trailed vehicle unless parking brake is applied.

https://truckmanualshub.com/

◆ Safety for children

Tragedy can occur if the operator is not alert to the presence of children. Children generally are attracted to machines and the work they do.

1. Never assume that children will remain where you last saw them.
2. Keep children out of the work area and under the watchful eye of another responsible adult.
3. Be alert and shut your machine down if children enter the work area.
4. Never carry children on your machine. There is no safe place for them to ride. They may fall off and be run over or interfere with your control of the machine.
5. Never allow children to operate the machine even under adult supervision.
6. Never allow children to play on the machine or on the implement.
7. Use extra caution when backing up. Look behind and down to make sure area is clear before moving.
8. When parking your machine if at all possible park on a firm, flat and level surface; if not, park across a slope. Set the parking brake(s), lower the implements to the ground, remove the key from the ignition and lock the cab door (if equipped) and chock the wheels.

◆ Operating on slopes

Slopes are a major factor related to loss-of-control and tip-over accidents, which can result in severe injury or death. All slopes require extra caution.

1. To avoid upsets, always back up steep slopes. If you cannot back up the slope or if you feel uneasy on it, do not operate on it. Stay off slopes too steep for safe operation.
2. Driving forward out of a ditch, mired condition or up a steep slope increases the risk of a tractor to be upset backward. Always back out of these situations. Extra caution is required with four-wheel drive models because their increased traction can give the operator false confidence in the tractor's ability to climb slopes.
3. Keep all movement on slopes slow and gradual. Do not make sudden changes in speed, direction or apply brake and make sudden motions of the steering wheel.
4. Avoid disengaging the clutch or changing gears speed when climbing or going down a slope. If on a slope disengaging the clutch or changing gears to neutral could cause loss of control.
5. Special attention should be made to the weight and location of implements and loads as such will affect the stability of the tractor.
6. To improve stability on slope, set widest wheel tread as shown in "TIRES, WHEELS AND BALLAST" section.
   Follow recommendations for proper ballasting.

◆ Driving the tractor on the road

1. Lock the two brake pedals together to help assure straight-line stops. Uneven braking at road speeds could cause the tractor to tip over.

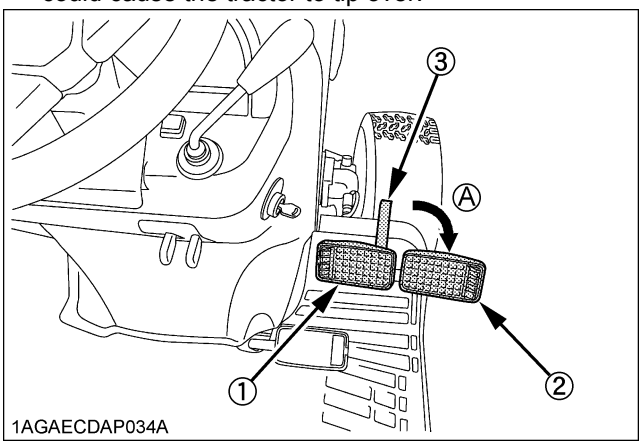

(1) Brake Pedal (LH)
(2) Brake Pedal (RH)
(3) Brake Pedal Lock
(A) Whenever travelling on the road

2. Check the front wheel engagement. The braking characteristics are different between two and four wheel drive. Be aware of the difference and use carefully.
3. Always slow the tractor down before turning. Turning at high speed may tip the tractor over.
4. Make sure that the Slow Moving Vehicle (SMV) sign is clean and visible. Use hazard lights and turn signals as required.

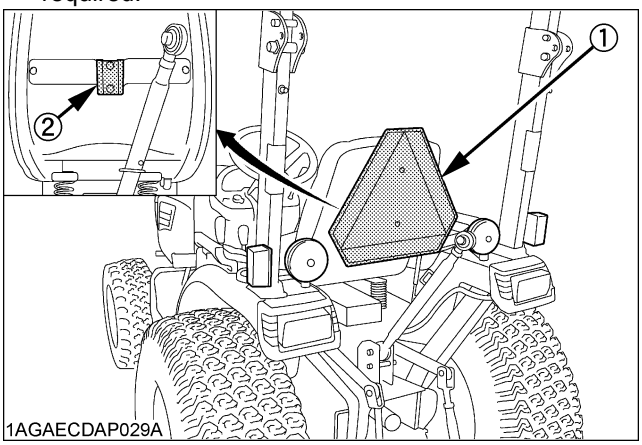

(1) SMV emblem
(2) Bracket

5. Observe all local traffic and safety regulations.
6. Turn the headlights on.
7. Drive at speeds that allow you to maintain control at all times.
8. Do not apply the differential lock while traveling at road speeds. The tractor may run out of control.
9. Avoid sudden motions of the steering wheel as they can lead to a dangerous loss of stability. The risk is especially great when the tractor is traveling at road speeds.

https://truckmanualshub.com/

10. Do not operate an implement while the tractor is on the road. Lock the 3-point hitch in the raised position.
11. When towing other equipment, use a safety chain and place an SMV emblem on it as well.

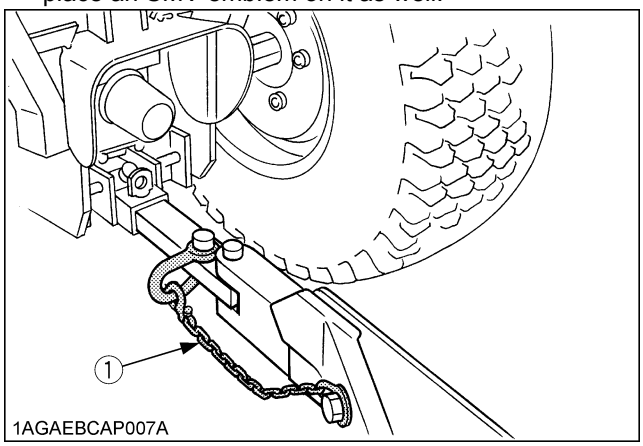

(1) Safety chain

3. PARKING THE TRACTOR

1. Disengage the PTO, lower all implements to the ground, place all control levers in their neutral positions, set the parking brake, stop the engine, and remove the key.
2. Make sure that the tractor has come to a complete stop before dismounting.
3. Avoid parking on steep slopes, if at all possible park on a firm and level surface; if not, park across a slope with chock the wheels.
   Failure to comply with this warning may allow the tractor to move and could cause injury or death.

4. OPERATING THE PTO

1. Wait until all moving components have completely stopped before getting off the tractor, connecting, disconnecting, adjusting, cleaning, or servicing any PTO driven equipment.
2. Keep the PTO shaft cover in place at all times. Replace the PTO shaft cap when the shaft is not in use.

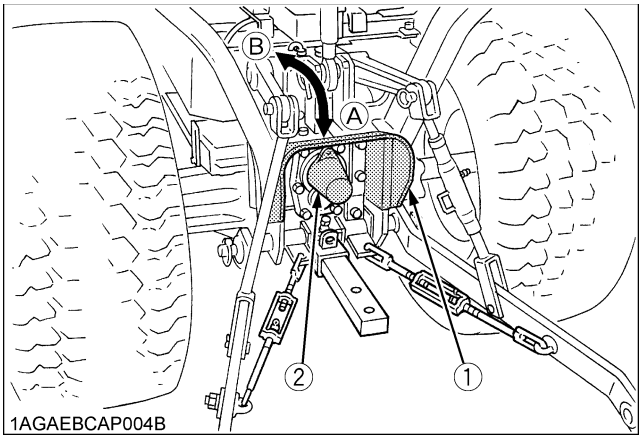

(1) PTO Shaft cover *(A) "NORMAL POSITION"*
(2) PTO Shaft cap *(B) "RAISED POSITION"*

3. Before installing or using PTO driven equipment, read the manufacturer's manual and review the safety labels attached to the equipment.
4. When operating stationary PTO driven equipment, always apply the tractor parking brake and place chocks behind and in front of the rear wheels. Stay clear of all rotating parts. Never step over rotating parts.

https://truckmanualshub.com/

5. USING 3-POINT HITCH

1. Use the 3-point hitch only with equipment designed for 3-point hitch usage.
2. When using a 3-point hitch mounted implement, be sure to install the proper counterbalance weight on the front of the tractor.
3. When transporting on the road, set the implement lowering speed knob in the "LOCK" position to hold the implement in the raised position.

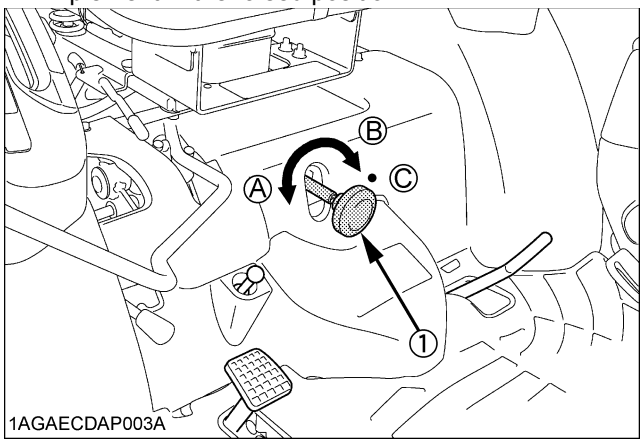

(1) 3-point hitch lowering speed knob

(A) "FAST"
(B) "SLOW"
(C) "LOCK"

6. SERVICING THE TRACTOR

Before servicing the tractor, park it on a firm, flat and level surface, set the parking brake, lower all implements to the ground, place the gear shift lever in neutral, stop the engine and remove the key.

1. Allow the tractor time to cool off before working on or near the engine, muffler, radiator, etc.
2. Do not remove radiator cap while coolant is hot. When cool, slowly rotate cap to the first stop and allow sufficient time for excess pressure to escape before removing the cap completely. If the tractor has a coolant recovery tank, add coolant or water to the tank, not the radiator. (See "Checking Coolant Level" in "DAILY CHECK" in "PERIODIC SERVICE" section.)
3. Always stop the engine before refueling. Avoid spills and overfilling.
4. Do not smoke when working around battery or when refueling. Keep all sparks and flames away from battery and fuel tank. The battery presents an explosive hazard, because it gives off hydrogen and oxygen especially when recharging.
5. Before "jump starting" a dead battery, read and follow all of the instructions. (See "JUMP STARTING" in "OPERATING THE ENGINE" section.)
6. Keep first aid kit and fire extinguisher handy at all times.
7. Disconnect the battery's ground cable before working on or near electric components.
8. To avoid the possibility of battery explosion, do not use or charge the refillable type battery if the fluid level is below the LOWER (lower limit level) mark. Check the fluid level regularly and add distilled water as required so that the fluid level is between the UPPER and LOWER levels.
9. To avoid sparks from an accidental short circuit, always disconnect the battery's ground cable (-) first and reconnect it last.

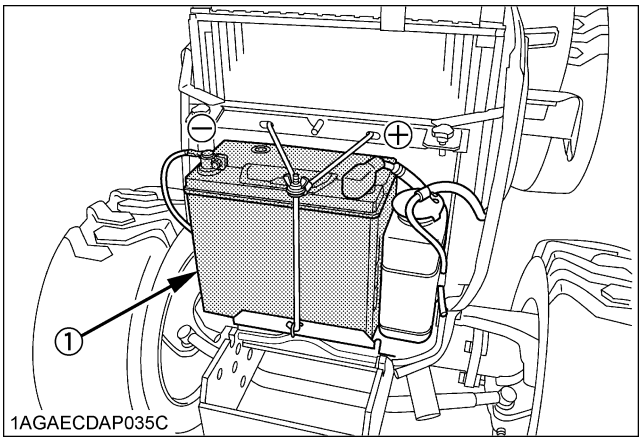

(1) Battery

10. Do not attempt to mount a tire on a rim. This should be done by a qualified person with the proper equipment.
11. Always maintain the correct tire pressure. Do not inflate tires above the recommended pressure shown in the operator's manual.

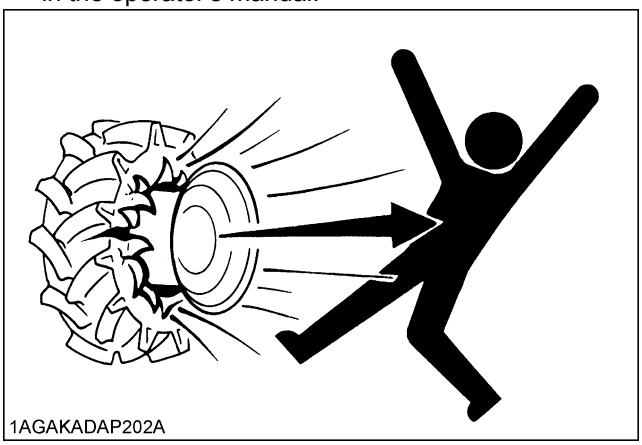

12. Securely support the tractor when either changing wheels or adjusting the wheel tread width.
13. Make sure that wheel bolts have been tightened to the specified torque.
14. Do not work under any hydraulically supported devices. They can settle, suddenly leak down, or be accidentally lowered. If it is necessary to work under tractor or any machine elements for servicing or adjustment, securely support them with stands or suitable blocking beforehand.

https://truckmanualshub.com/

15. Escaping hydraulic fluid under pressure has sufficient force to penetrate skin, causing serious personal injury. Before disconnecting hydraulic lines, be sure to release all residual pressure. Before applying pressure to the hydraulic system, make sure that all connections are tight and that all lines, pipes, and hoses are free of damage.

1BAACAAAP010B

16. Fluid escaping from pinholes may be invisible. Do not use hands to search for suspected leaks; use a piece of cardboard or wood. Use of safety goggles or other eye protection is also highly recommended. If injured by escaping fluid, see a medical doctor at once. This fluid will produce gangrene or severe allergic reaction.

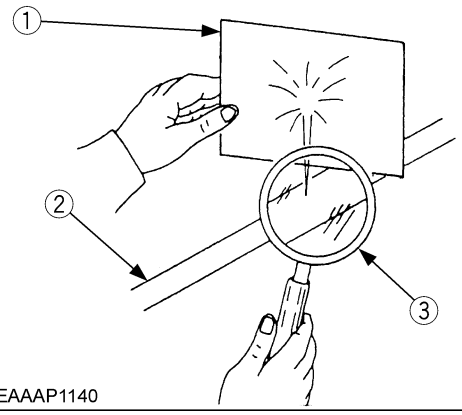

1AGAEAAAP1140

(1) Cardboard
(2) Hydraulic line
(3) Magnifying glass

https://truckmanualshub.com/

7. DANGER, WARNING AND CAUTION LABELS

(1) Part No. 6C150-4743-1 [HST type]

1AGAEBMAP069E

(1) Part No. 6C140-4743-1 [Manual Transmission type]

1AGAEBQAP085E

(2) Part No. 6C090-4965-1

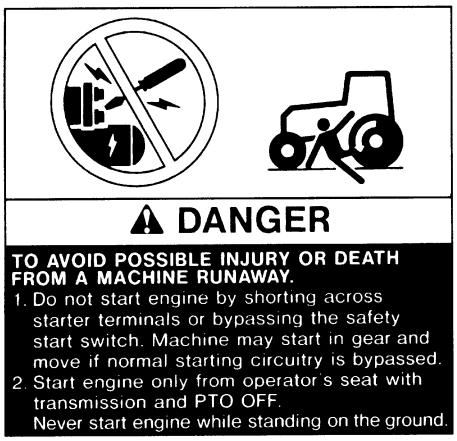

1AGAEBMAP074E

(3) Part No. 6C090-4959-1
Do not touch hot surface like muffler; etc.

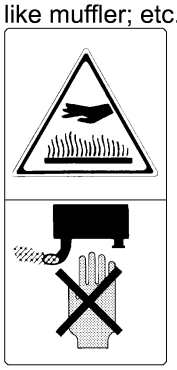

1AGAECDAP0320

(4) Part No. 6C090-4958-2
Do not get your hands close to engine fan and fan belt.

1AGAECDAP0310

(5) Part No. TC420-4956-1

Diesel fuel only No fire

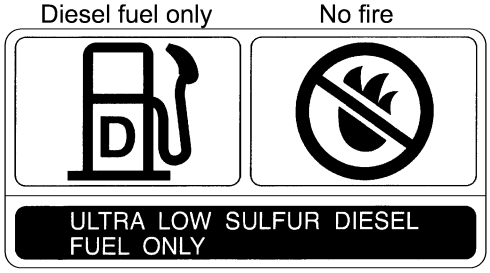

1AGAIDHAP154E

(6) Part No. 6C300-4744-1

1AGAIHFAP069A

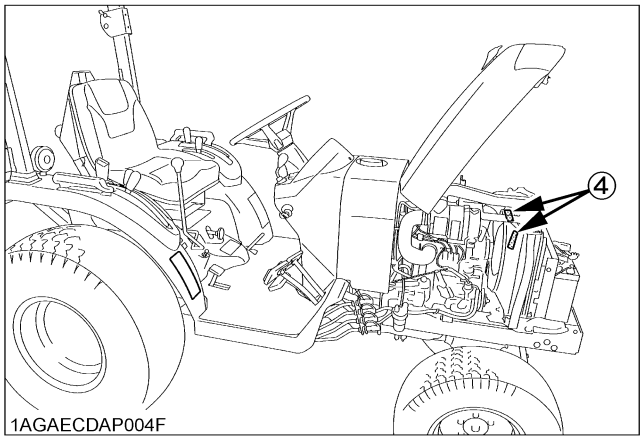

1AGAECDAP004F

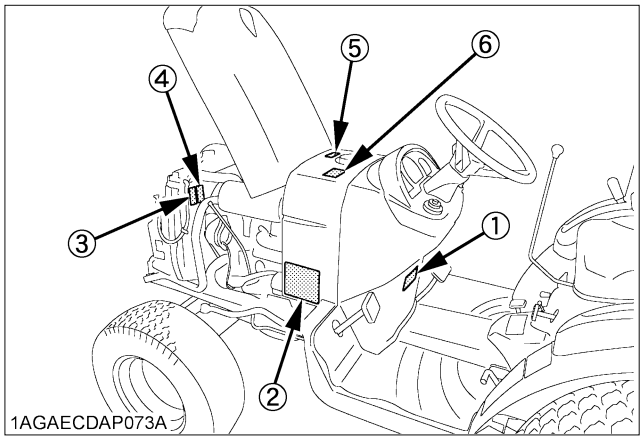

1AGAECDAP073A

https://truckmanualshub.com/

(1) Part No. 6C300-3012-2

1AGAEBQAP107A

(2) Part No. 6C120-4745-1

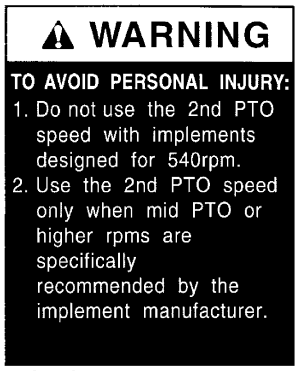

1AGAECDAP0330

(3) Part No. TA040-4932-2 [Rigid ROPS type]

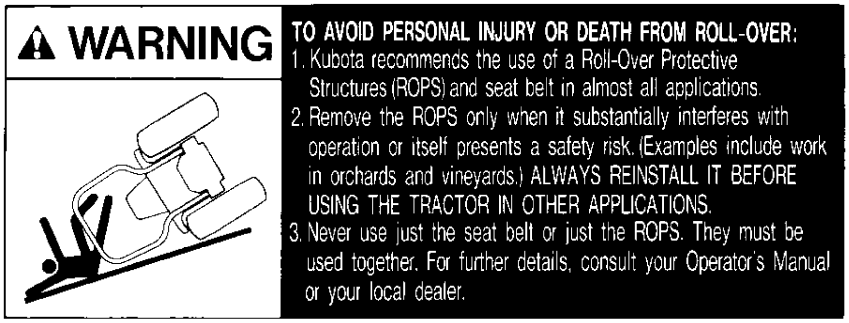

1AGAECDAP071E

(3) Part No. TA240-9848-2 [Foldable ROPS type]

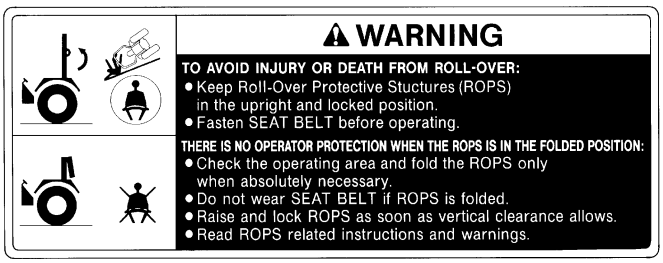

1AGAEBMAP071E

(4) Part No. 6C070-4742-2

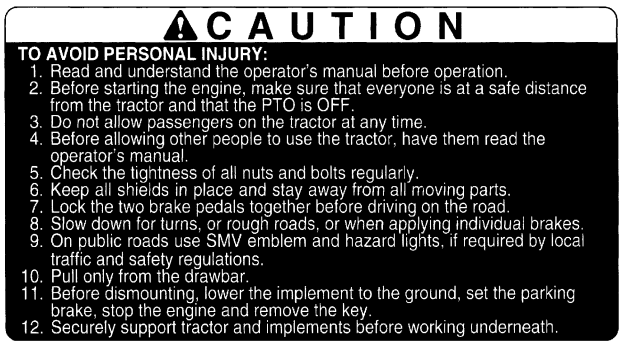

1AGAEBMAP068E

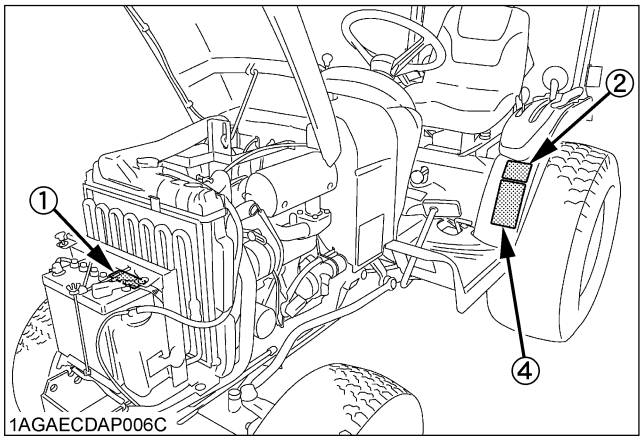

1AGAECDAP006C

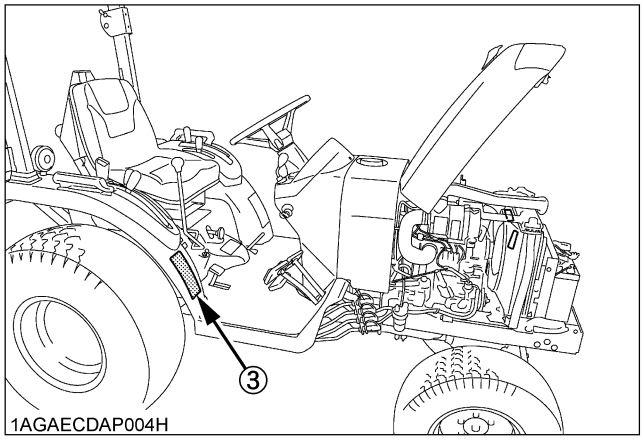

1AGAECDAP004H

https://truckmanualshub.com/

(1) Part No. 6C200-4959-1

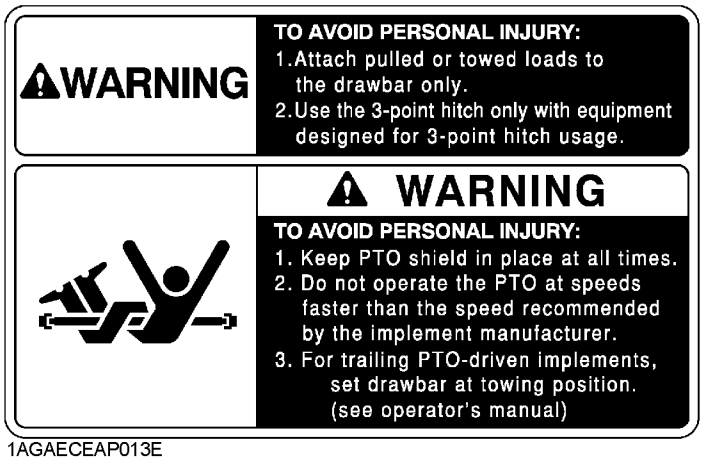

1AGAECEAP013E

(2) Part No. 6C140-4746-1 [Rigid ROPS type]

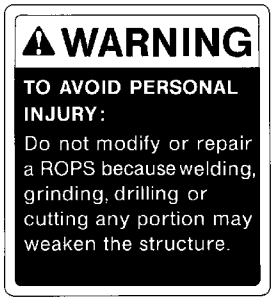

1AGAECDAP070E

(2) Part No. 3A111-9554-1 [Foldable ROPS type]

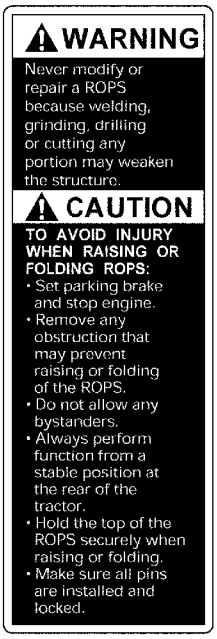

1AGAEBMAP080E

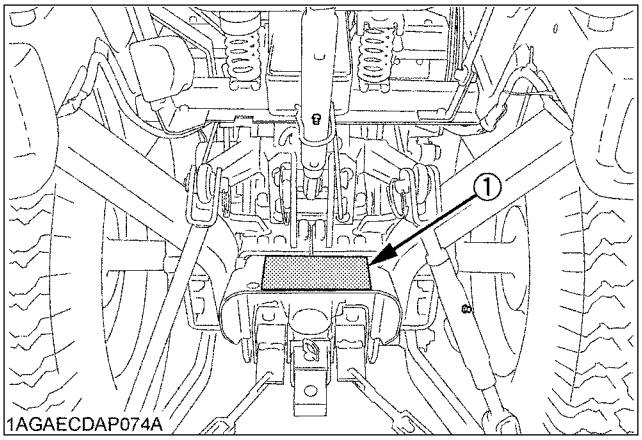

1AGAECDAP074A

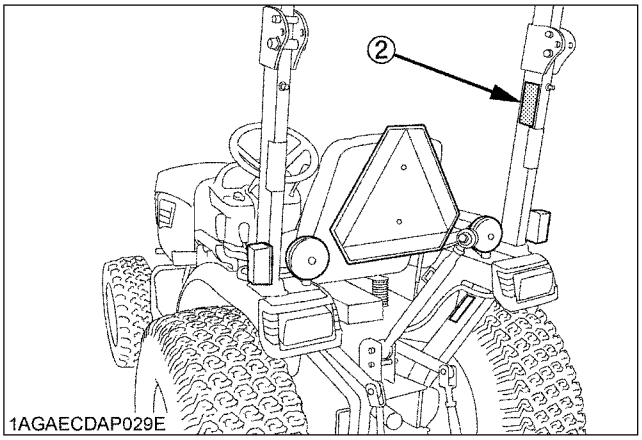

1AGAECDAP029E

8. CARE OF DANGER, WARNING AND CAUTION LABELS

1. Keep danger, warning and caution labels clean and free from obstructing material.
2. Clean danger, warning and caution labels with soap and water, dry with a soft cloth.
3. Replace damaged or missing danger, warning and caution labels with new labels from your local KUBOTA Dealer.
4. If a component with danger, warning and caution label(s) affixed is replaced with new part, make sure new label(s) is (are) attached in the same location(s) as the replaced component.
5. Mount new danger, warning and caution labels by applying on a clean dry surface and pressing any bubbles to outside edge.

https://truckmanualshub.com/

https://truckmanualshub.com/

SERVICING OF TRACTOR

Your dealer is interested in your new tractor and has the desire to help you get the most value from it. After reading this manual thoroughly, you will find that you can do some of the regular maintenance yourself.
However, when in need of parts or major service, be sure to see your KUBOTA Dealer.
For service, contact the KUBOTA Dealership from which you purchased your tractor or your local KUBOTA Dealer.
When in need of parts, be prepared to give your dealer both the tractor and engine serial numbers.
Locate the serial numbers now and record them in the space provided.

	Type	Serial No.
Tractor		
Engine		
Date of Purchase		
Name of Dealer		
(To be filled in by purchaser)		

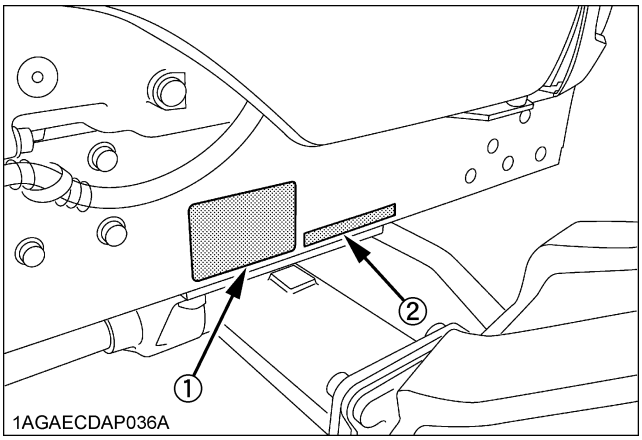

(1) Tractor identification plate
(2) Tractor serial number

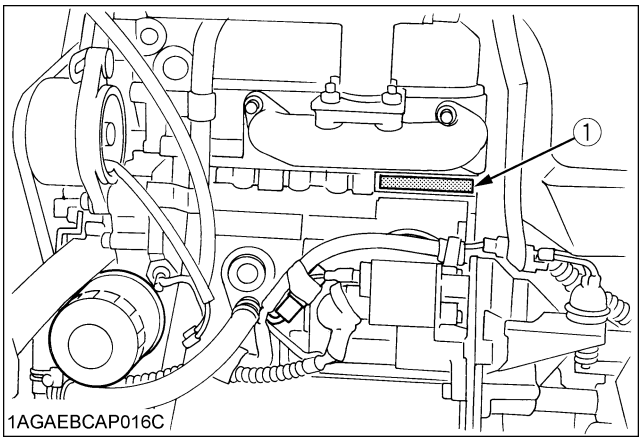

(1) Engine serial number

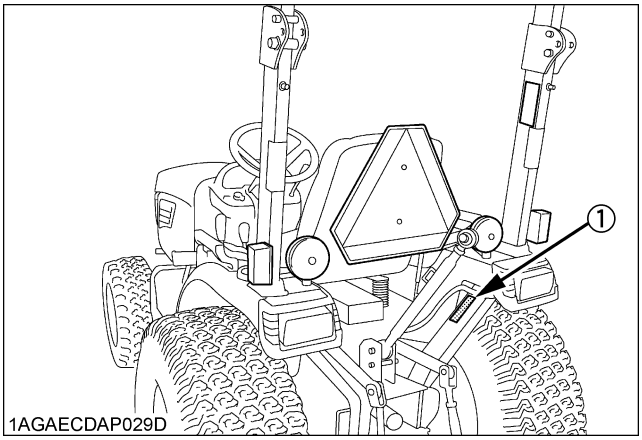

(1) ROPS identification plate
(ROPS serial No.)

https://truckmanualshub.com/

SPECIFICATIONS

SPECIFICATION TABLE

Model				B2320DTN-1	B2320DT	B2320HSDN	B2320HSD	B2620HSD	B2920HSD
PTO power*			kW (HP)	13.4 (18.0)		12.7 (17.0)		14.2 (19.0)	15.7 (21.0)
Engine	Maker			KUBOTA					
	Model			D1005-E4-D22				D1105-E4-D22	D1305-E3-D22
	Type			E-TVCS, liquid cooled, 3-cylinder diesel					
	Number of cylinders			3					
	Bore and stroke		mm (in.)	76 x 73.6 (3.0 x 2.9)				78 x 78.4 (3.1 x 3.1)	78 x 88 (3.1 x 3.5)
	Total displacement		cm^3 (cu.in.)	1001 (61.1)				1123 (68.5)	1261 (77.0)
	Engine gross power*		kW (HP)	17.2 (23.0)				19.4 (26.0)	21.6 (29.0)
	Rated revolution		rpm	2800					
	Low idling revolution		rpm	1000 to 1100					
	Maximum torque		N-m (ft-lb)	60 (44)				71 (52)	78 (58)
	Battery			12 V, RC : 80 min, CCA : 430 A					
Capacities	Fuel tank		L (U.S.gals.)	26 (6.9)					
	Engine crankcase (with filter)		L (U.S.qts.)	3.1 (3.3)					3.5 (3.7)
	Engine coolant		L (U.S.qts.)	3.9 (4.1)					
	Transmission case		L (U.S.gals.)	14 (3.7)		15 (4.0)			
Dimensions	Overall length (without 3P)		mm (in.)	2360 (92.9)	2385 (93.9)	2360 (92.9)	2385 (93.9)	2415 (95.1)	
	Overall width		mm (in.)	900 (35.4)	1145 (45.1)	938 (36.9)	1145 (45.1)	1245 (49.0)	
	Overall height (with ROPS)		mm (in.)	1910 (75.2)	2130 (83.9)	1910 (75.2)	2130 (83.9)	2160 (85.0)	
	Wheel base		mm (in.)	1563 (61.5)					
	Min. ground clearance		mm (in.)	300 (11.8)	305 (12.0)	300 (11.8)	305 (12.0)	325 (12.8)	
	Tread	Front	mm (in.)	705 (27.8)	800 (31.5)	780 (30.7)	800 (31.5)	815 (32.1)	
		Rear	mm (in.)	700 (27.6) to 750 (29.5)	900 (35.5)	700 (27.6) to 750 (29.5)	900 (35.5)	950 (37.4)	
Weight (with ROPS)			kg (lbs.)	605 (1334)	650 (1433)	630 (1390)	670 (1477)	705 (1554)	
Clutch				Dry single plate					

https://truckmanualshub.com/

Model				B2320DTN-1	B2320DT	B2320HSDN	B2320HSD	B2620HSD	B2920HSD
Traveling system	Tires	Front		5-12	6-12	5-12	6-12	7-12	
		Rear		8-16	9.5-16	8-16	9.5-16	11.2-16	
	Steering			Integral type power steering					
	Transmission			Gear shift, 9 forward and 3 reverse		Main-hydrostatic transmission, 3 range gear shift (3 forward, 3 reverse)			
	Brake			Wet disk type					
	Min. turning radius (with brake)		m (feet)	2.1 (6.9)					
Hydraulic unit	Hydraulic control system			Position control valve	Quarter inching valve	Position control valve	Quarter inching valve		
	Pump capacity		L / min (gals / min)	3P: 17.9 (4.7), Power steering: 13.5 (3.6)					
	Three point hitch			SAE Category 1					
	Max. lift force	At lift points	kg (lbs.)	750 (1655)	615 (1356)	750 (1655)	615 (1356)		
		24 in. behind lift point	kg (lbs.)	590 (1300)	480 (1058)	590 (1300)	480 (1058)		
PTO	Rear-PTO			SAE 1-3/8, 6 splines					
	PTO / Engine speed		rpm	540 / 2773, 960 / 2722					
	Mid-PTO			-	USA No. 5 (KUBOTA 10-tooth) involute spline				
	PTO / Engine speed		rpm	-	2500 / 2750				

NOTE: * Manufacturer's estimate The company reserves the right to change the specifications without notice.

https://truckmanualshub.com/

TRAVELING SPEEDS

[HST Type] (At rated engine rpm)

Model		B2320HSDN		B2320			
Tire size (Rear)		8 - 16 Farm		9.5 - 16 Farm		33 x 12.5 - 15 Turf	
	Range gear shift lever	km / h	mph	km / h	mph	km / h	mph
Forward	Low	0 to 5.2	0 to 3.2	0 to 5.6	0 to 3.5	0 to 5.6	0 to 3.5
	Middle	0 to 8.7	0 to 5.4	0 to 9.3	0 to 5.8	0 to 9.3	0 to 5.8
	High	0 to 17.7	0 to 11.0	0 to 18.9	0 to 11.7	0 to 18.9	0 to 11.7
Reverse	Low	0 to 4.2	0 to 2.6	0 to 4.5	0 to 2.8	0 to 4.5	0 to 2.8
	Middle	0 to 7.0	0 to 4.3	0 to 7.4	0 to 4.6	0 to 7.4	0 to 4.6
	High	0 to 14.2	0 to 8.8	0 to 15.1	0 to 9.4	0 to 15.1	0 to 9.4

Model		B2620 / B2920			
Tire size (Rear)		11.2 - 16 Farm		33 x 12.5 - 15 Turf	
	Range gear shift lever	km / h	mph	km / h	mph
Forward	Low	0 to 6.0	0 to 3.7	0 to 5.6	0 to 3.5
	Middle	0 to 9.9	0 to 6.2	0 to 9.3	0 to 5.8
	High	0 to 20.2	0 to 12.6	0 to 18.9	0 to 11.7
Reverse	Low	0 to 4.8	0 to 3.0	0 to 4.5	0 to 2.8
	Middle	0 to 7.9	0 to 4.9	0 to 7.4	0 to 4.6
	High	0 to 16.1	0 to 10.0	0 to 15.1	0 to 9.4

The company reserves the right to change the specification without notice.

[Manual transmission Type] (At rated engine rpm)

Model				B2320DTN		B2320DT			
Tire size (Rear)				8-16 Farm		9.5 - 16 Farm		33 x 12.5 - 15 Turf	
		Range gear shift lever	Main gear shift lever	km / h	mph	km / h	mph	km / h	mph
Forward	1	Low	1	1.0	0.6	1.1	0.7	1.1	0.7
	2		2	1.5	0.9	1.6	1.0	1.6	1.0
	3		3	2.7	1.7	2.9	1.8	2.9	1.8
	4	Middle	1	3.4	2.1	3.6	2.2	3.6	2.2
	5		2	4.8	3.0	5.1	3.2	5.1	3.2
	6		3	8.7	5.4	9.3	5.8	9.3	5.8
	7	High	1	6.5	4.0	7.0	4.4	7.0	4.4
	8		2	9.3	5.8	9.9	6.2	9.9	6.2
	9		3	16.8	10.5	18.0	11.2	18.0	11.2
Reverse	1	Low	R	1.3	0.8	1.4	0.9	1.4	0.9
	2	Middle	R	4.2	2.6	4.5	2.8	4.5	2.8
	3	High	R	8.1	5.0	8.7	5.4	8.7	5.4

The company reserves the right to change the specifications without notice.

https://truckmanualshub.com/

IMPLEMENT LIMITATIONS

The KUBOTA Tractor has been thoroughly tested for proper performance with implements sold or approved by KUBOTA. Use with implements which are not sold or approved by KUBOTA and which exceed the maximum specifications listed below, or which are otherwise unfit for use with the KUBOTA Tractor may result in malfunctions or failures of the tractor, damage to other property and injury to the operator or others. [Any malfunctions or failures of the tractor resulting from use with improper implements are not covered by the warranty.]

	Tread (max.width) with farm tires		Lower link end max. loading weight W0
	Front	Rear	
B2320DTN	705 mm (27.8 in.)	750 mm (29.5 in.)	300 kg (660 lbs.)
B2320HSDN	780 mm (30.7 in.)	750 mm (29.5 in.)	
B2320DT B2320HSD	800 mm (31.5 in.)	900 mm (35.4 in.)	
B2620HSD B2920HSD	815 mm (32.1 in.)	950 mm (37.4 in.)	

	Actual figures		
B2320 B2620 B2920	Implement weight W1 and / or size	Max. Drawbar Load W2	Trailer loading weight W3 Max. capacity
	As in the following list (Shown on the next page)	300 kg (660 lbs.)	1000 kg (2210 lbs.)

Lower link end max. loading weight.....The max. allowable load which can be put on the lower link end : W0
Implement weight.....The implement's weight which can be put on the lower link : W1
Max. drawbar load.....W2
Trailer loading weight .....The max. loading weight for trailer (without trailer's weight) : W3

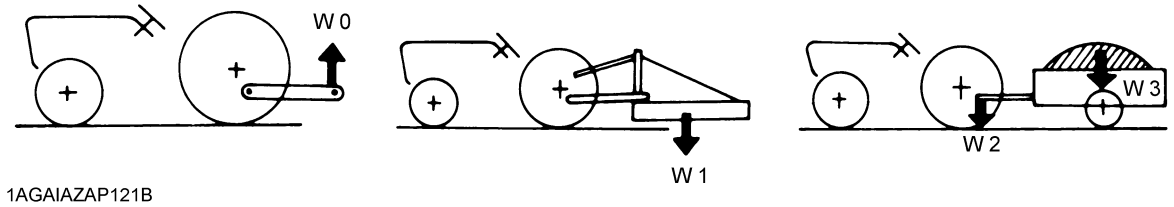

NOTE :
- Implement size may vary depending on soil operating conditions.

https://truckmanualshub.com/

Implement		Remarks	B2320DTN	B2320HSDN	B2320	B2620	B2920
Mower	Mid-mount	Max. cutting width cm (in.) Max. weight kg (lbs.)	-	152 (60) 140 (300)			
	Rotary-cutter (1 Blade)	Max. cutting width cm (in.) Max. weight kg (lbs.)	122 (48) 204 (450)				
	Rear-mount (2 or 3 Blade)	Max. cutting width cm (in.) Max. weight kg (lbs.)	152 (60) 227 (500)				
	Flail-mower	Max. cutting width cm (in.)	107 (42)			122 (48)	
	Sickle bar	Max. cutting width cm (in.)	122 (48)			152 (60)	
Rotary tiller		Max.tilling width cm (in.) Max. weight kg (lbs.) Slip clutch	125 (49) 195 (430) Necessary			127 (50) 213 (470) Necessary	
Bottom plow		Max. size cm (in.)	30 (12) x 1			36 (14) x 1	
Disc plow		Max. size cm (in.)	56 (22) x 1				
Cultivator		Max. size cm (in.)	122 (48) 1 Row			137 (54) 1 Row	
Disc harrow		Max. harrowing width cm (in.) Max. weight kg (lbs.)	137 (54) 190 (420)			152 (60) 190 (420)	
Sprayer		Max. tank capacity L (U.S.gals.)	150 (40)			190 (50)	
Front blade		Max. cutting width cm (in.) Sub frame	122 (48) Necessary			152 (60) Necessary	
Rear blade		Max. cutting width cm (in.) Max. weight kg (lbs.)	152 (60) 160 (350)				
Front loader		Max. lifting capacity kg (lbs.) (Bucket center) Max. width cm (in.) Sub frame	-		300 (660) 122 (48) Necessary	360 (794) 127 (50) Necessary	
Box blade		Max. cutting width cm (in.) Max. weight kg (lbs.)	137 (54) 170 (375)			137 (54) 227 (500)	
Back hoe		Max. digging depth cm (in.) Max. weight kg (lbs.) Sub frame	-		198 (78) 320 (705) Necessary		
Snow blower		Max. digging depth cm (in.) Max. weight kg (lbs.) Sub frame	152 (60) 180 (400) Necessary			152 (60) 200(450) Necessary	
Trailer		Max. load capacity kg (lbs.) Max. drawbar load kg (lbs.)	1000 (2200) 300 (660)				

NOTE :

- Implement size may vary depending on soil operating conditions.

https://truckmanualshub.com/

INSTRUMENT PANEL AND CONTROLS

■ Instrument Panel, Switches and Hand Controls

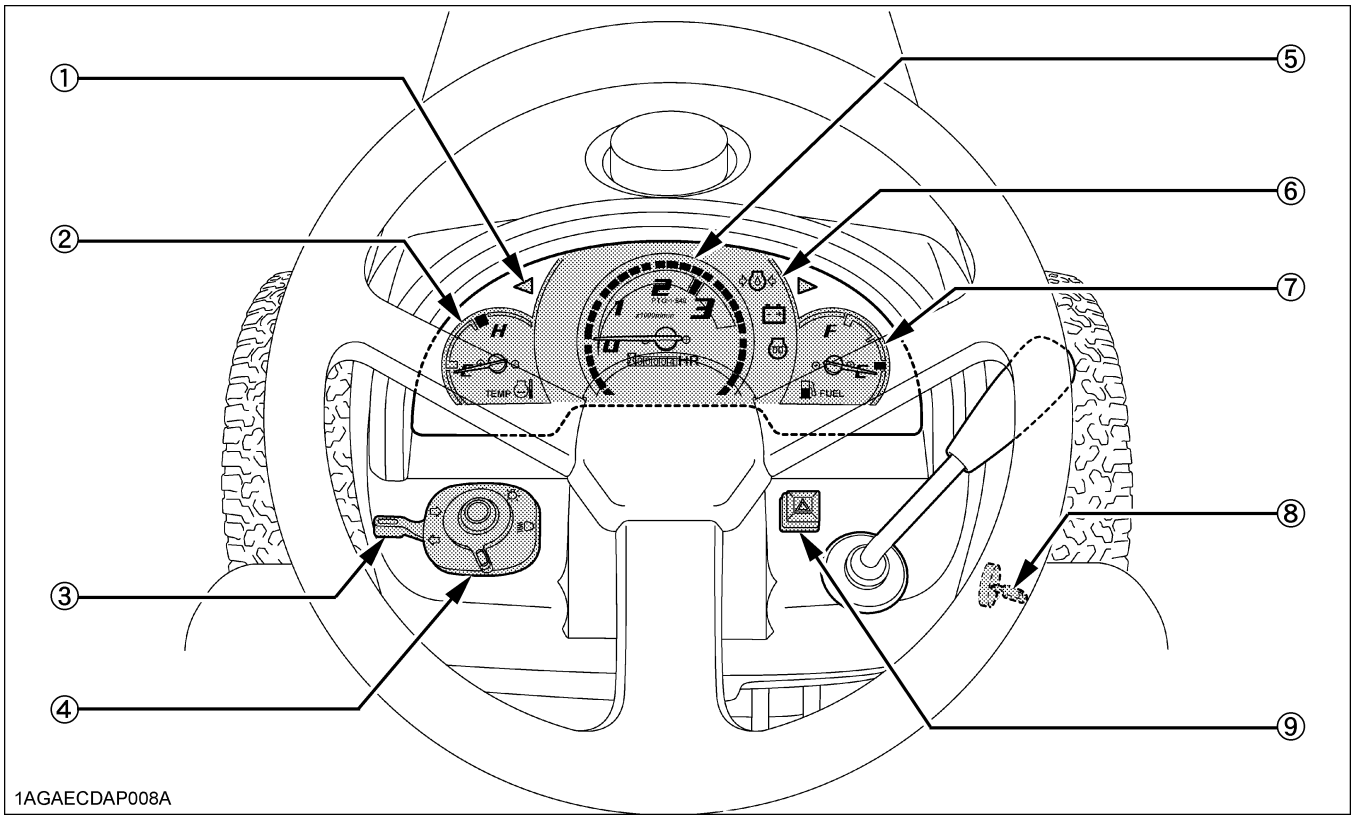

ILLUSTRATED CONTENTS

(1) Turn signal / Hazard light indicator 20
(2) Coolant temperature gauge 26
(3) Turn signal light switch 20
(4) Head light switch 20
(5) Hourmeter / Tachometer 26
(6) Easy Checker (TM) 25
(7) Fuel gauge 26
(8) Key switch 12
(9) Hazard light switch 20

https://truckmanualshub.com/

■ Foot and Hand Controls [HST Type]

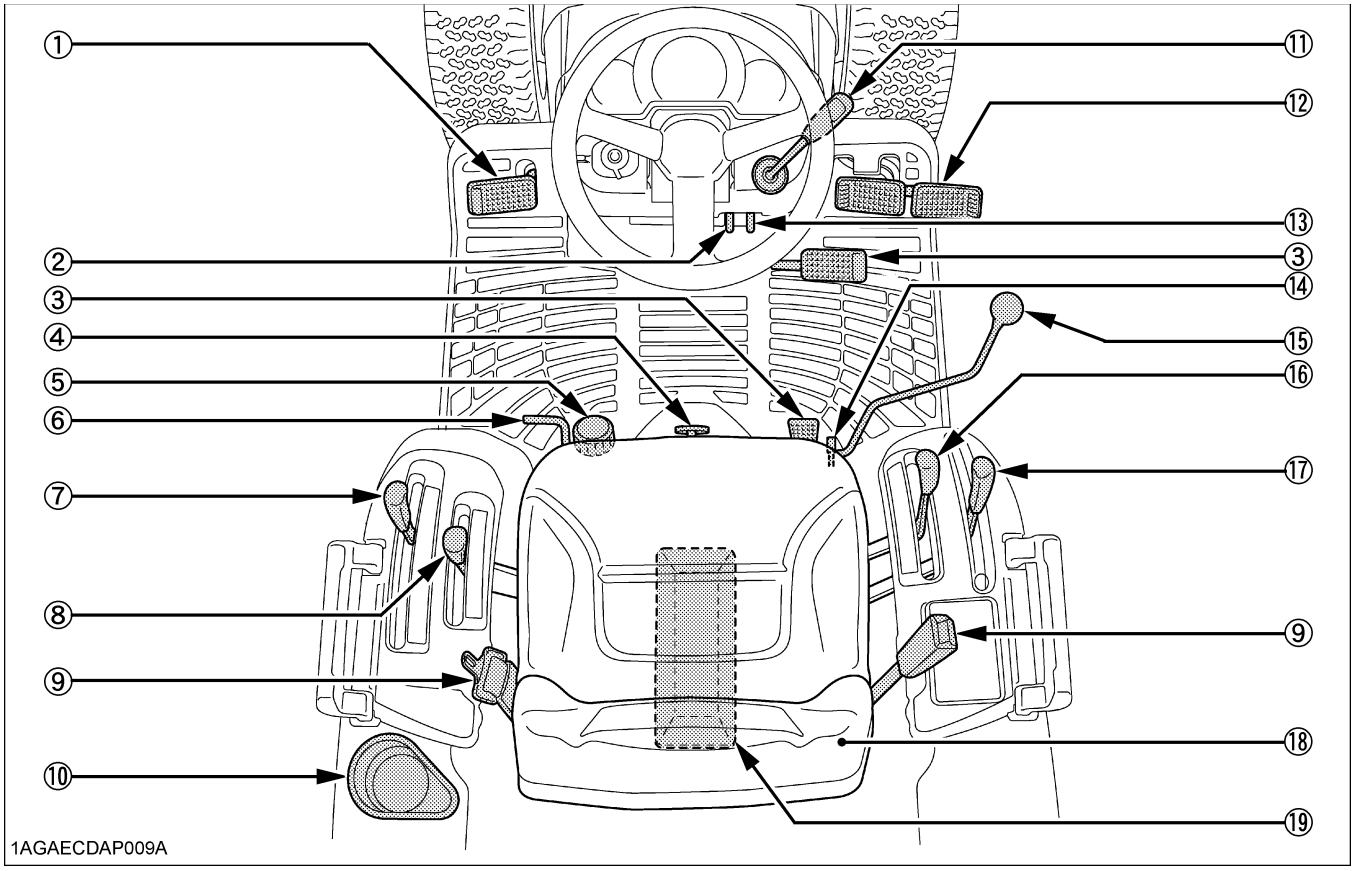

ILLUSTRATED CONTENTS

(1) Clutch pedal 21
(2) Speed set lever 25
(3) Speed control pedal 24
(4) 3-Point hitch lowering speed knob 35
(5) Cutting height control dial (if equipped) ..... ---
(6) Differential lock pedal 27
(7) Range gear shift lever 22
(8) PTO gear shift lever 29
(9) Seat belt 20
(10) Cup holder ..... ---
(11) Hand throttle lever 23
(12) Brake pedal 21
(13) Parking brake lever 27
(14) Loader lock lever 38
(15) Loader control lever 12, 37
(16) Front wheel drive lever 23
(17) Hydraulic control lever [Except B2320HSDN].. 34
Position control lever [B2320HSDN] 34
(18) Operator's seat 19
(19) Tool-box ..... ---

https://truckmanualshub.com/

■ Foot and Hand Controls [Manual Transmission Type]

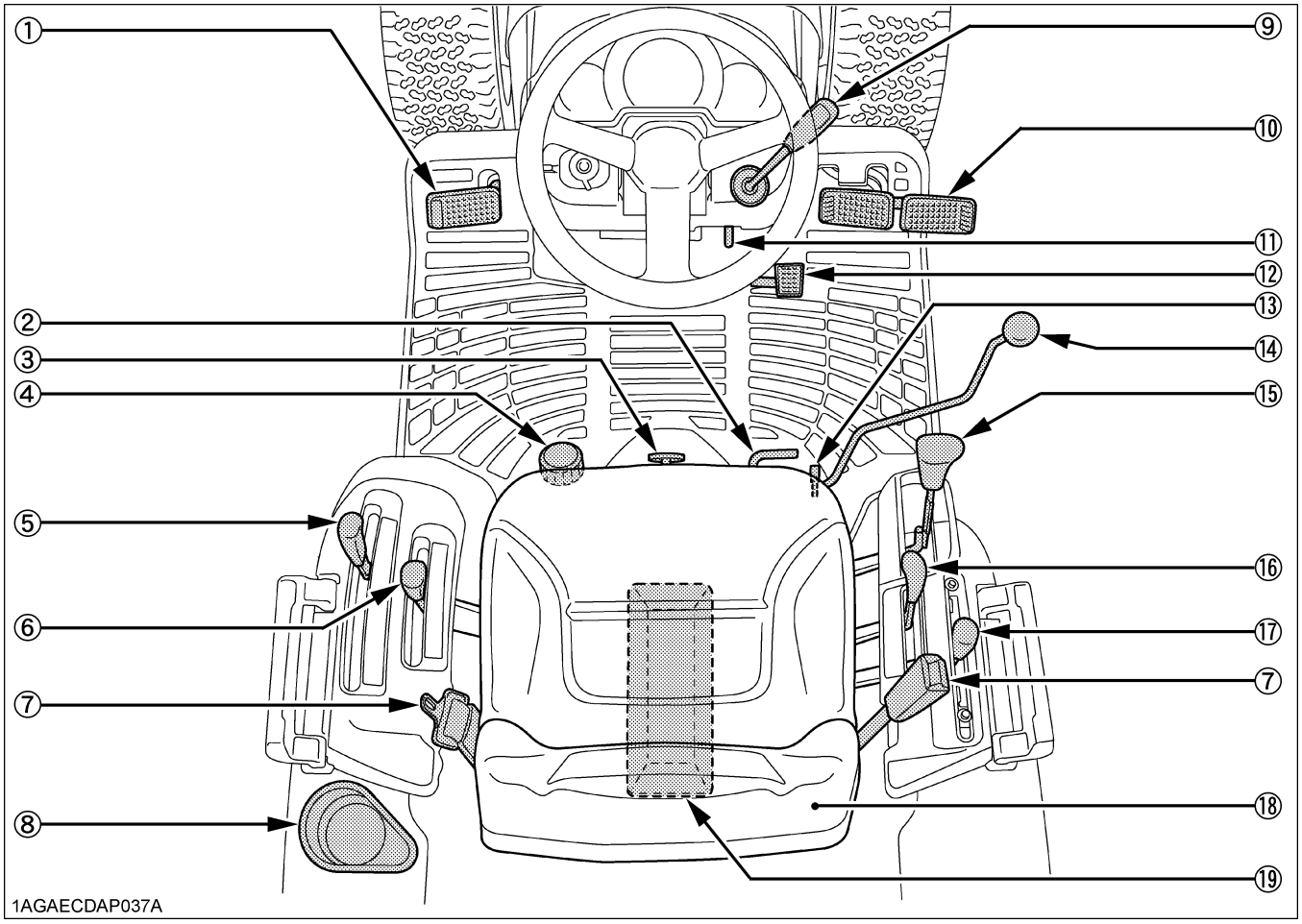

ILLUSTRATED CONTENTS

(1) Clutch pedal 21
(2) Differential lock pedal 27
(3) 3-Point hitch lowering speed knob 35
(4) Cutting height control dial (if equipped) ..... ---
(5) *Range gear shift lever* 22
(6) PTO gear shift lever 29
(7) Seat belt 20
(8) Cup holder ..... ---
(9) Hand throttle lever 23
(10) Brake pedal 21
(11) Parking brake lever 27
(12) Foot throttle 23
(13) Loader lock lever (if equipped) 38
(14) Loader control lever (if equipped) 12, 37
(15) Main gear shift lever 22
(16) Front wheel drive lever 23
(17) Hydraulic control lever [Except B2320DTN] ... 34
Position control lever [B2320DTN] 34
(18) Operator's seat 19
(19) Tool-box ..... ---

https://truckmanualshub.com/

■ Pedal Location Label

The label is located on the cover under seat.

[HST type]

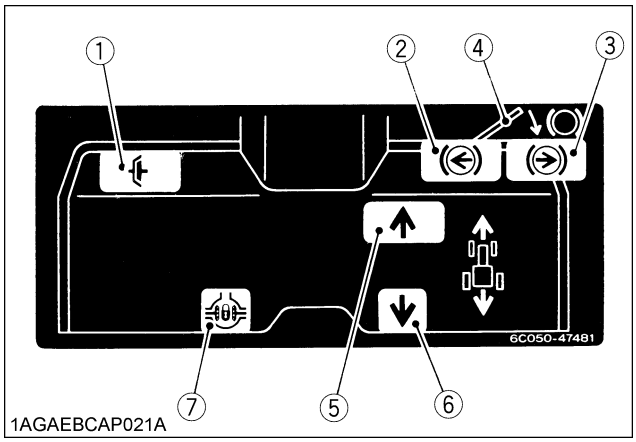

(1) Clutch pedal
(2) Brake pedal (left)
(3) Brake pedal (right)
(4) Brake pedal lock
(5) Speed control pedal (forward)
(6) Speed control pedal (reverse)
(7) Differential lock pedal

[Manual transmission type]

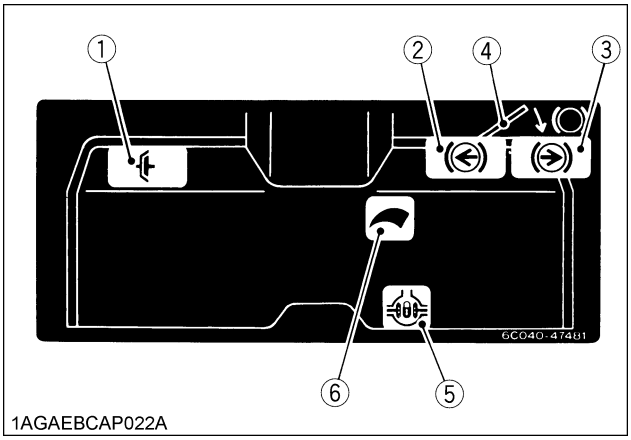

(1) Clutch pedal
(2) Brake pedal (left)
(3) Brake pedal (right)
(4) Brake pedal lock
(5) Differential lock pedal
(6) Foot throttle

https://truckmanualshub.com/

PRE-OPERATION CHECK

DAILY CHECK

To prevent trouble from occurring, it is important to know the condition of the tractor well. Check it before starting.

CAUTION

To avoid personal injury:

- **Be sure to check and service the tractor on a level surface with the engine shut off and the parking brake "ON" and implement lowered to the ground.**

Check item

- Walk around inspection
- Check engine oil level
- Check transmission oil level
- Check coolant level
- Clean grill and radiator screen
- Check air cleaner evacuator valve
  (When used in a dusty place)
- Check brake and clutch pedal
- Check indicators, gauges and meter
- Check lights
- Check wire harness
- Check seat belt and ROPS (if equipped)
- Check movable parts
- Refuel
  (See "DAILY CHECK" in "PERIODIC SERVICE" section.)
- Care of danger, warning and caution labels
  (See "DANGER, WARNING AND CAUTION LABELS" in "SAFE OPERATION" section.)

https://truckmanualshub.com/

OPERATING THE ENGINE

CAUTION

To avoid personal injury:

- **Read "Safe Operation" in the front of this manual.**
- **Read the danger, warning and caution labels located on the tractor.**
- **To avoid the danger of exhaust fume poisoning, do not operate the engine in a closed building without proper ventilation.**
- **Never start engine while standing on ground. Start engine only from operator's seat.**
- **Make it a rule to set all shift levers to the "NEUTRAL" positions and to place PTO lever in "OFF" position before starting the engine.**

IMPORTANT :

- Do not use starting fluid or ether.
- To protect the battery and the starter, make sure that the starter is not continuously turned for more than 30 seconds.

STARTING THE ENGINE

1. Make sure the parking brake is set.

1. To set the parking brake;
   (1) Interlock the brake pedals.
   (2) Depress the brake pedals.
   (3) Latch the brake pedals with the parking brake lever.
2. To release the parking brake, depress the brake pedals again.

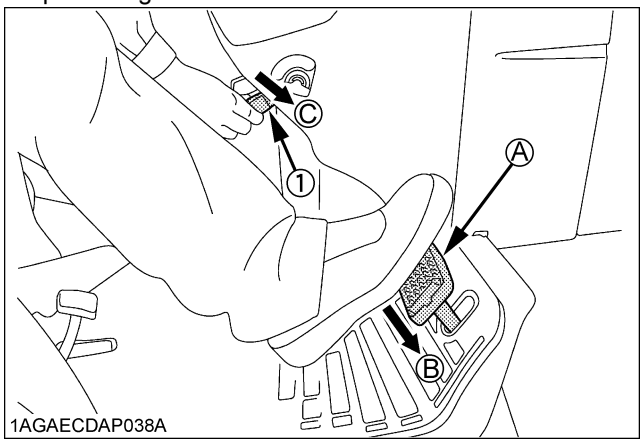

(1) Parking brake lever
(A) Interlock the brake pedals
(B) "DEPRESS"
(C) "PUSH-DOWN"

2. Place the PTO gear shift lever in "NEUTRAL" position.

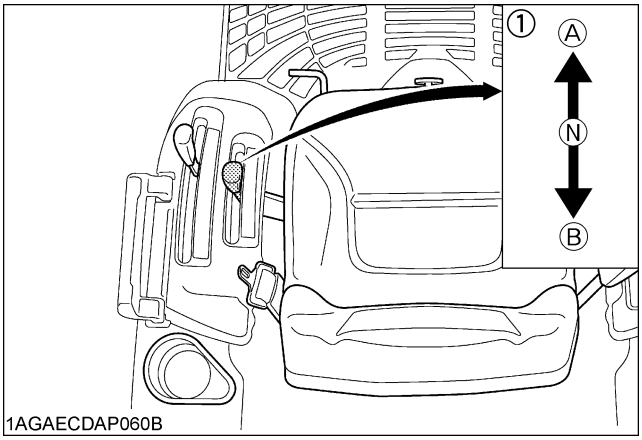

(1) PTO gear shift lever
(A) Rear PTO "2nd"
Mid PTO "ON"
(B) Rear PTO "1st"
Mid PTO "OFF"
(N) "NEUTRALPOSITION"

NOTE :

- The PTO gear shift lever shifts to the (A) position only when the PTO restricting plate is in "RELEASE" position.

https://truckmanualshub.com/

3. [HST Type]
Place the speed set lever in "OFF" position.
Place the speed control pedal in "NEUTRAL" position.
Place the range gear shift lever (L-M-H) in "NEUTRAL" position.

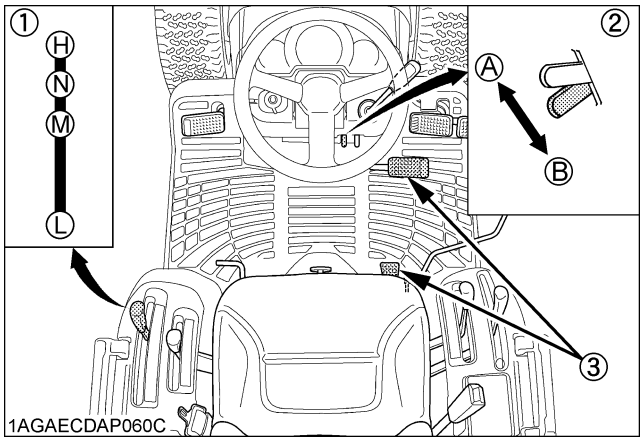

(1) Range gear shift lever (L-M-H)
(2) Speed set lever
(3) Speed control pedal
(A) "OFF"
(B) "ON"
(H) "HIGH"
(M) "MIDDLE"
(L) "LOW"
(N) "NEUTRAL POSITION"

NOTE :
- The speed control pedal automatically returns to neutral when the operator's foot is released from the pedal.

[Manual Transmission Type]
Place the main gear shift lever in "NEUTRAL" position.

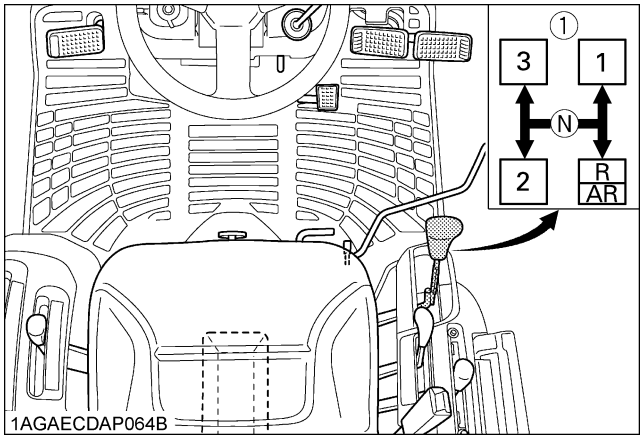

(1) Main gear shift lever

4. Lock the loader control lever in "NEUTRAL" position. (if equipped)

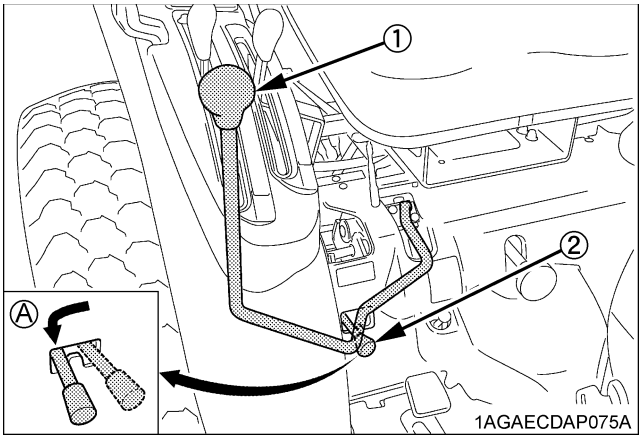

(1) Loader control lever
(2) Lock lever
(A) "LOCK"

5. [Except B2320DTN, B2320HSDN]
Place the hydraulic control lever in "NEUTRAL" position.

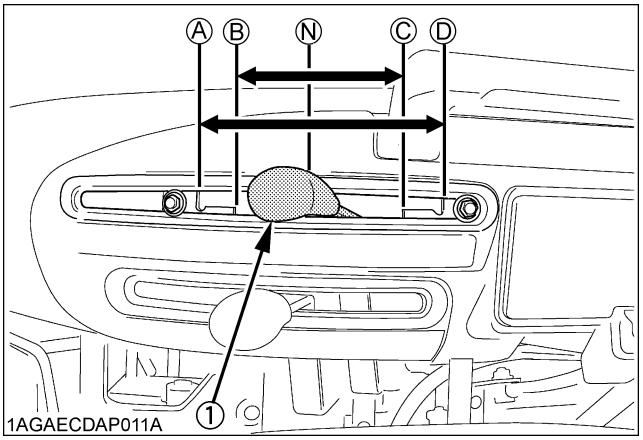

(1) Hydraulic control lever
(A) "DOWN"
(B) "SLOW DOWN"
(N) "NEUTRAL"
(C) "SLOW UP"
(D) "UP"

https://truckmanualshub.com/

[B2320DTN, B2320HSDN]
Place the position control lever in "LOWEST" position.

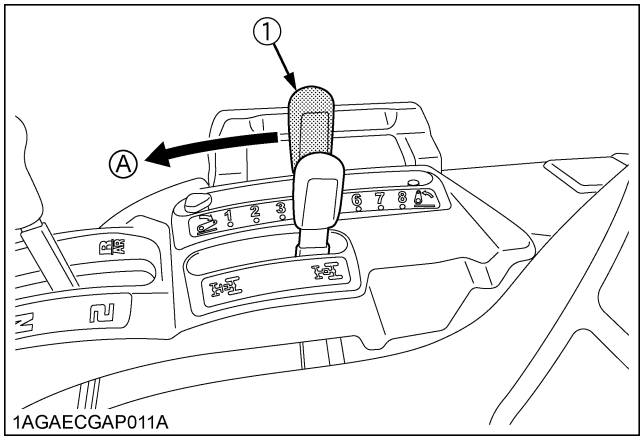

(1) Position control lever *(A) "DOWN"*

6. Set the throttle lever to about 1/2 way.

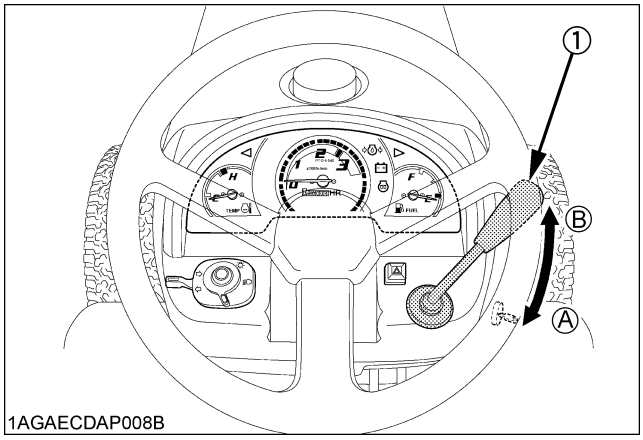

(1) Hand throttle lever *(A) "INCREASE"*
(B) "DECREASE"

7. Insert the key into the key switch and turn it "ON".

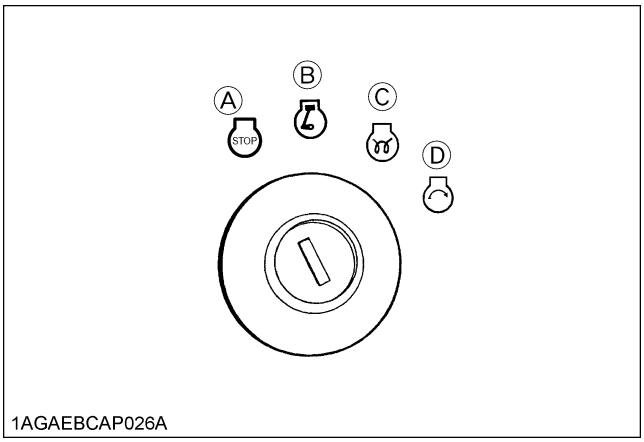

(A) "OFF" *(C) "PREHEAT"*
(B) "ON" *(D) "START"*

◆ **Check Easy Checker(TM) lamps:**

1. When the key is turned "ON", lamps (3) (4) should come on. If trouble should occur at any location while the engine is running, the warning lamp corresponding to that location comes on.

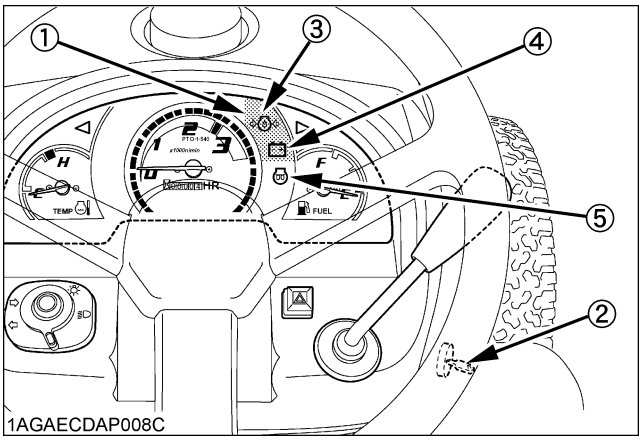

(1) Easy checker(TM)
(2) Key switch
(3) Engine oil pressure
(4) Electrical charge
(5) Glow plug indicator

IMPORTANT :

- Daily checks with the Easy Checker(TM) only are not sufficient. Never fail to conduct physical daily checks carefully by referring to "DAILY CHECK" section. (See "DAILY CHECK" in "PERIODIC SERVICE" section.)

https://truckmanualshub.com/

8. Fully depress the clutch pedal, turn the key to "PREHEAT" position and hold it for about 2 to 3 seconds.

Temperature	Preheating Time
Over 0 °C (32 °F)	2 to 3 sec.
0 to -5 °C (32 to 23 °F)	5 sec.
-5 to -15 °C (23 to 5 °F)	10 sec.

NOTE :
- Glow plug indicator (5) comes on while engine is being preheated.

9. Turn the key to "START" position and release when the engine starts.

IMPORTANT :
- [HST type]
  Because of the safety devices, the engine will not start except when the PTO gear shift lever is placed in the "OFF" position, the speed control pedal is placed in the "NEUTRAL" position, and the clutch pedal is disengaged.
- [Manual transmission type]
  Because of the safety devices, the engine will not start except when the PTO gear shift lever is placed in the "OFF" position, the main gear shift lever is placed in the "NEUTRAL" position, and the clutch pedal is disengaged.

◆ **Cold Weather Starting**

When the ambient temperature is below -5℃ (23℉) and the engine is very cold. If the engine fails to start, turn off the key for 30 seconds. Then repeat steps **8** and **9**. To protect the battery and the starter, make sure that the starter is not continuously turned for more than 30 seconds.

■Block Heater (Option)

A block heater is available as an option from your dealer. It will assist you in starting your tractor when the ambient temperature is below -15℃ (5℉)

10. Check to see that all the lamps on the Easy Checker(TM) are "OFF".

If a lamp is still on, immediately stop the engine and determine the cause.

11. Release the clutch pedal

STOPPING THE ENGINE

1. After slowing the engine to idle, turn the key to "OFF".

2. Remove the key.

WARMING UP

CAUTION

To avoid personal injury:
- **Be sure to set the parking brake during warm-up.**
- **Be sure to set all shift levers to the "NEUTRAL" positions and to place PTO lever in "OFF" position during warm-up.**

For five minutes after engine start-up, allow engine to warm up without applying any load, this is to allow oil to reach every engine part. If load should be applied to the engine without this warm-up period, trouble such as seizure, breakage or premature wear may develop.

■Warm-up Transmission Oil at Low Ambient Temperatures

Hydraulic oil serves as transmission fluid. In cold weather, the oil may be cold with increased viscosity. This can cause delayed oil circulation or abnormally low hydraulic pressure for some time after engine start-up. This in turn can result in trouble in the hydraulic system. To prevent the above, observe the following instructions:
Warm up the engine at about 50 % of rated rpm according to the table below:

Ambient temperature	Warm-up time requirement
Above 0 °C (32 °F)	At least 5 minutes
0 to -10 °C (32 to 14 °F)	5 to 10 minutes
-10 to -20 °C (14 to -4 °F)	10 to 15 minutes
Below -20 °C (-4 °F)	More than 15 minutes

IMPORTANT :
- Do not operate the tractor under full load condition until it is sufficiently warmed up.

https://truckmanualshub.com/

JUMP STARTING

CAUTION

To avoid personal injury:

- **Battery gases can explode. Keep cigarettes, sparks, and flames away from battery.**
- **If tractor battery is frozen, do not jump start engine.**
- **Do not connect other end of negative (-) jumper cable to negative (-) terminal of tractor battery.**

When jump starting engine, follow the instructions below to safely start the engine.

1. Bring helper vehicle with a battery of the same voltage as disabled tractor within easy cable reach. "THE VEHICLES MUST NOT TOUCH".
2. Engage the parking brakes of both vehicles and put the shift levers in neutral. Shut both engines off.
3. Put on safety goggles and rubber gloves.
4. Ensure the vent caps are securely in place. (if equipped)
5. Cover vent holes with damp rags. Do not allow the rag to touch the battery terminals.
6. Attach the red clamp to the positive (red, (+) or pos.) terminal of the dead battery and clamp the other end of the same cable to the positive (red, (+) or pos.) terminal of the helper battery.
7. Clamp the other cable to the negative (black, (-) or neg.) terminal of the helper battery.
8. Clamp the other end to the engine block or frame of the disabled tractor as far from the dead battery as possible.
9. Start the helper vehicle and let its engine run for a few moments. Start the disabled tractor.
10. Disconnect the jumper cables in the exact reverse order of attachment. (Steps 8, 7 and 6).
11. Remove and discard the damp rags.

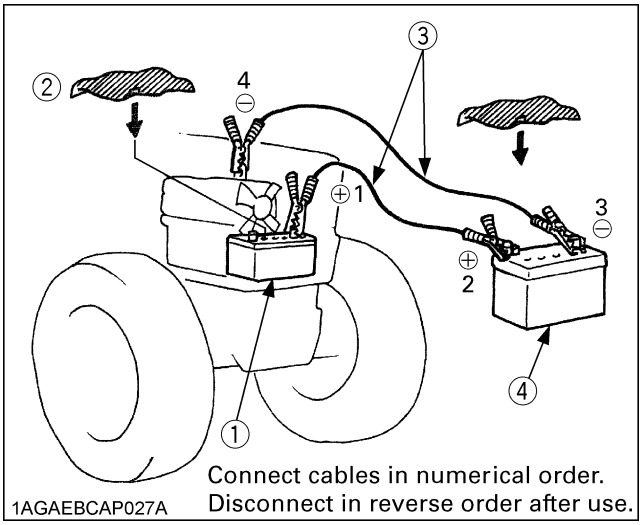

(1) Dead battery
(2) Lay a damp rag over the vent caps
(3) Jumper cables
(4) Helper battery

IMPORTANT :

- This machine has a 12volt negative (-) ground starting system.
- Use only same voltage for jump starting.
- Use of a higher voltage source on tractors electrical system could result in severe damage to tractor's electrical system.
  Use only matching voltage source when "Jump starting" a low or dead battery condition.

https://truckmanualshub.com/

OPERATING THE TRACTOR

OPERATING NEW TRACTOR

How a new tractor is handled and maintained determines the life of the tractor.

A new tractor just off the factory production line has been, of course, tested, but the various parts are not accustomed to each other, so care should be taken to operate the tractor for the first 50 hours at a slower speed and avoid excessive work or operation until the various parts become "broken-in." The manner in which the tractor is handled during the "breaking-in." period greatly affects the life of your tractor. Therefore, to obtain the maximum performance and the longest life of the tractor, it is very important to properly break-in your tractor. In handling a new tractor, the following precautions should be observed.

■Do not Operate the Tractor at Full Speed for the First 50 Hours

- Do not start quickly nor apply the brakes suddenly.
- In winter, operate the tractor after fully warming up the engine.
- Do not run the engine at speeds faster than necessary.
- On rough roads, slow down to suitable speeds.
  Do not operate the tractor at fast speed.

The above precautions are not limited only to new tractors, but to all tractors. But it should be especially observed in the case of new tractors.

■Changing Lubricating Oil for New Tractors

The lubricating oil is especially important in the case of a new tractor. The various parts are not "broken-in" and are not accustomed to each other; small metal grit may develop during the operation of the tractor; and this may wear out or damage the parts. Therefore, care should be taken to change the lubricating oil a little earlier than would ordinarily be required.

For further details of change interval hours, see "MAINTENANCE" section.

OPERATING FOLDABLE ROPS

[Except B2320DTN, B2320HSDN]

CAUTION

To avoid personal injury:

- **When raising or folding the ROPS, apply parking brake, stop the engine and remove the key.**
  Always perform function from a stable position at the rear of tractor.
- **Fold the ROPS down only when absolutely necessary and fold it up and lock it again as soon as possible.**
- **Before proceeding to fold ROPS, check for any possible interference with installed implements and attachments.**
  If interference occurs, contact your KUBOTA Dealer.

■To Fold the ROPS

1. Remove both set pins.

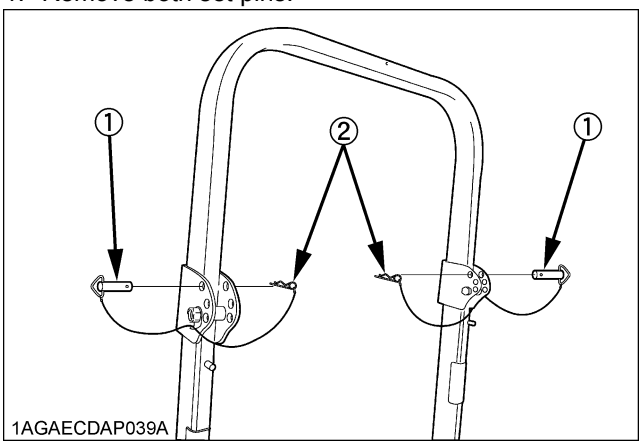

(1) Set pin
(2) Hair pin

https://truckmanualshub.com/

2. Fold the ROPS.

CAUTION

To avoid personal injury:

- **Hold the ROPS tightly with both hands and fold the ROPS slowly and carefully.**

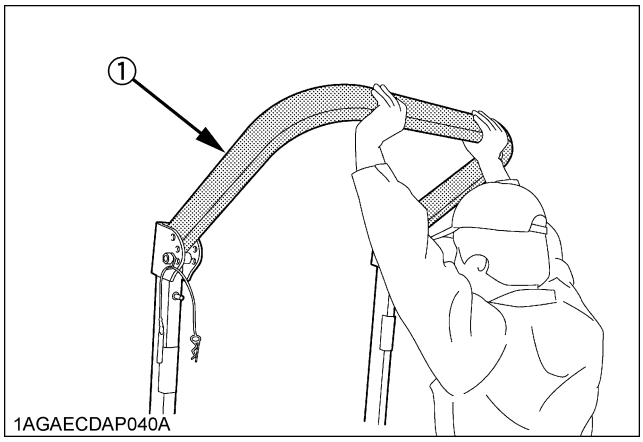

(1) ROPS

3. Insert both set pins and secure them with the hair pins.

CAUTION

To avoid personal injury:

- **Make sure that both set pins are properly installed and secured with the hair pins.**

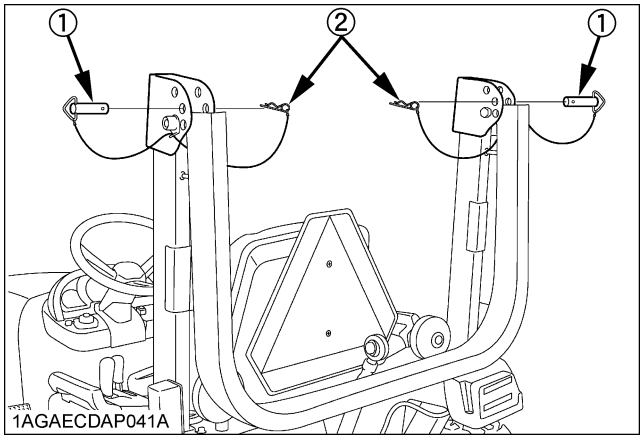

(1) Set pin
(2) Hair pin

■To Raise the ROPS to Upright Position

1. Remove both hair pins and set pins.

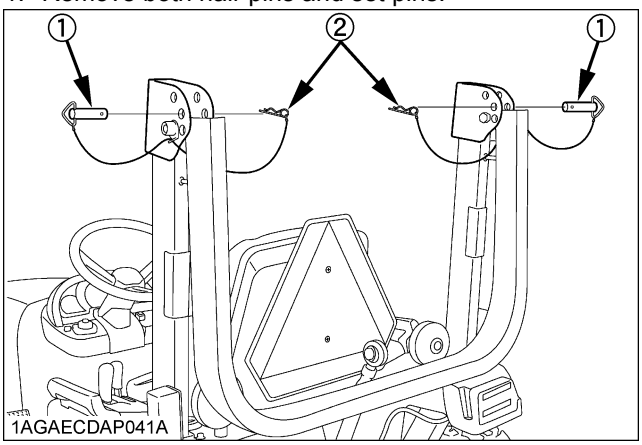

(1) Set pin
(2) Hair pin

2. Raise ROPS to the upright position.

CAUTION

To avoid personal injury:

- **Raise the ROPS slowly and carefully.**

3. Insert both set pins and secure them with the hair pins.

CAUTION

To avoid personal injury:

- **Make sure that both set pins are properly installed as soon as the ROPS is in the upright position and secured with the hair pins.**

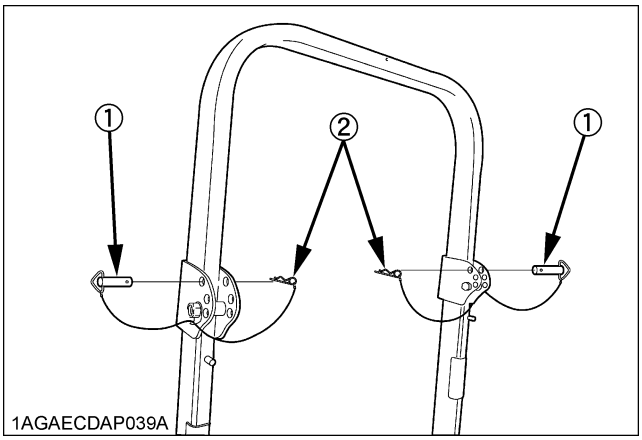

(1) Set pin
(2) Hair pin

https://truckmanualshub.com/

■Adjustment of Foldable ROPS

- Adjust free fall of the ROPS upper frame regularly.
- If you feel less friction in folding the ROPS, tighten the nut (1) until you feel the right friction in the movement.

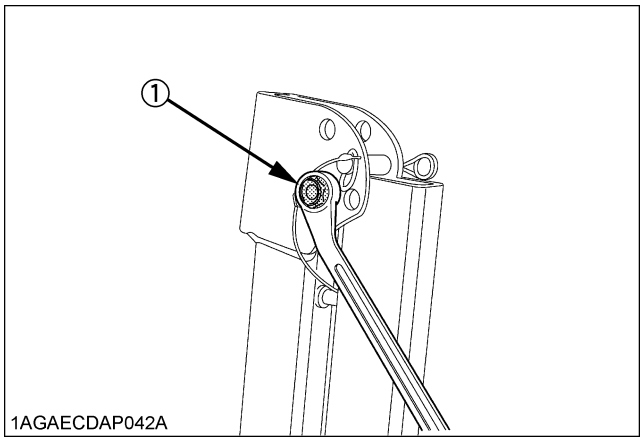

(1) Nut

STARTING

1. Adjusting the operator's position.

■Operator's Seat

CAUTION

To avoid personal injury:

- **Make sure that the seat is completely secured after each adjustment.**
- **Do not allow any person other than the driver to ride on the tractor.**

◆ **Position adjustment**

Pull in the position adjust lever and slide the seat backward or forward, as required. The seat will lock in position when the lever is released.

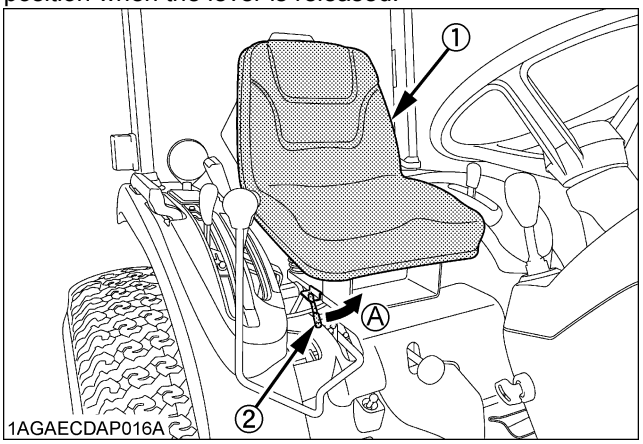

(1) Seat
(2) Position adjust lever
(A) "PULL IN"

IMPORTANT :

- After adjusting the operator's seat, be sure to check that the seat is properly locked.

https://truckmanualshub.com/

■Seat Belt

CAUTION

To avoid personal injury:

- **Always use the seat belt when the ROPS is installed.**
- **Do not use the seat belt if a foldable ROPS is down or there is no ROPS.**

Adjust the seat belt for proper fit and connect to the buckle. The seat belt is auto-locking retractable type.

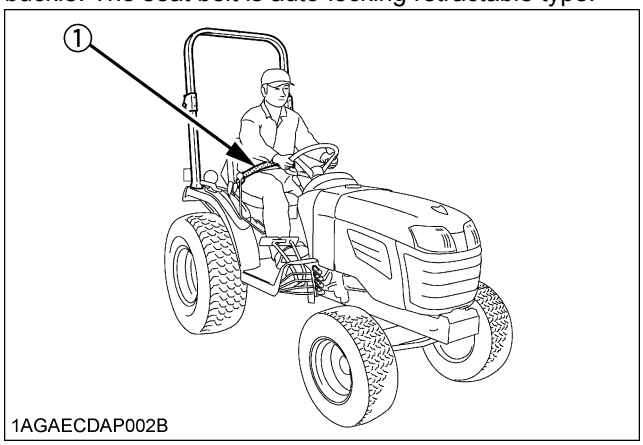

(1) Seat belt

2. Selecting light switch positions.

■Head Light / Turn Signal / Hazard Light Switch

◆ **Head Light Switch**

(A) ○ .....Head light OFF.

(B) ≡D .....Head light ON.

◆ **Hazard Light**

1. When hazard light switch is pushed, the hazard lights flash, along with the L/H and R/H indicators on the instrument panel.
2. Push hazard light switch again to turn off the hazard lights.

◆ **Turn Signal with Hazard Light Switch On.**

1. To indicate a right turn with the hazard lights already flashing (hazard switch on), turn the turn signal switch clockwise.
2. To indicate a left turn with the hazard lights already flashing, turn the turn signal switch counterclockwise.
3. When the left or right turn signal is activated in combination with the hazard lights, the indicated turning light will flash and the other will stay on.

◆ **Turn Signal with Hazard Light Switch Off**

1. To indicate a right turn without hazard lights (hazard switch off), turn the turn signal switch clockwise.
2. To indicate a left turn without hazard lights, turn the turn signal switch counterclockwise.
3. When the left or right turn signal is activated without the hazard lights, the indicated turning light will flash and the other will stay on.

NOTE :

- The hazard light switch is operative when the key switch is in either the "ON" or "OFF" positions.
- The turn signal light switch is only operative when the key switch is in the "ON" position.
- The indicator in the hazard light switch will light up when the head light switch is turned on.
- Be sure to return the turn signal switch to center position after turning.

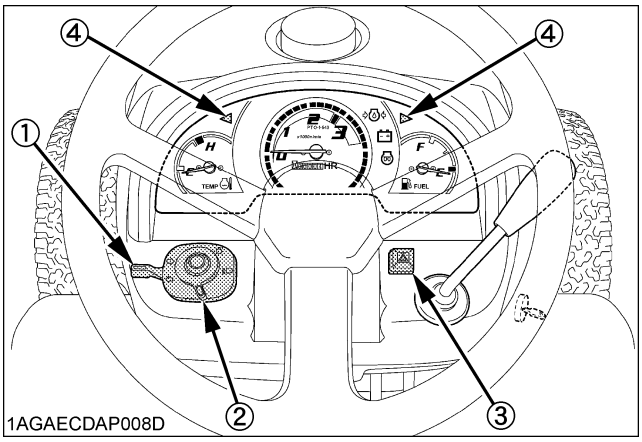

(1) Turn signal light switch
(2) Head light switch
(3) Hazard light switch
(4) Hazard / Turn signal indicator

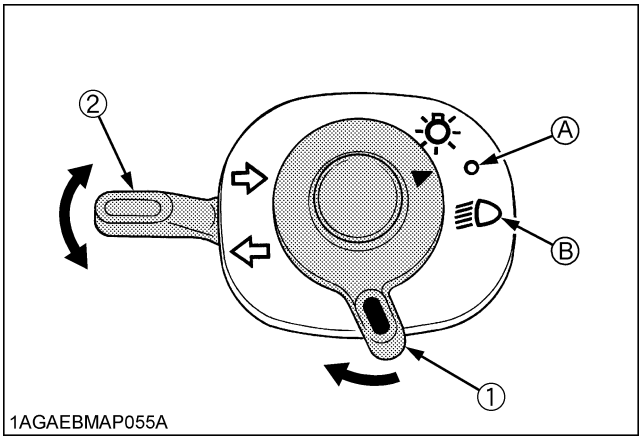

(1) Head light switch *(A) "OFF"*
(2) Turn signal light switch *(B) "ON"*

https://truckmanualshub.com/

3. Checking the brake pedal.

■Brake Pedals (Right and Left)

WARNING

To avoid personal injury:

- **Applying only one rear wheel brake at high speeds could cause the tractor to swerve or roll-over.**

CAUTION

To avoid personal injury:

- **An accident may occur if the tractor is suddenly braked, such as by heavy towed loads shifting forward or loss of control.**
- **The braking characteristics are different between two and four wheel drive. Be aware of the difference and use carefully.**
- **When driving on icy, wet or loose surfaces, make sure the tractor is correctly ballasted to avoid skidding and loss of steering control. Operate at reduced speed.**

1. Before operating the tractor on the road or before applying the parking brake, be sure to interlock the right and left pedals as illustrated below.
2. Use individual brakes to assist in making sharp turns at slow speeds (Field Operation Only). Disengage the brake pedal lock and depress only one brake pedal.
3. Be sure brake pedals have equal adjustment when using locked together.

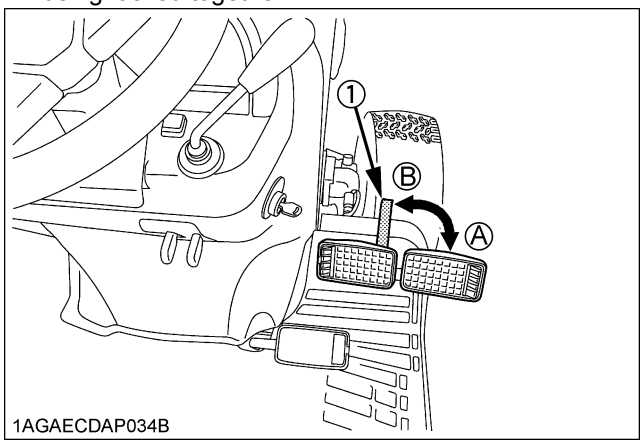

(1) Brake pedal lock *(A) "LOCK"* *(B) "RELEASE"*

4. Raise the implement. (See "HYDRAULIC UNIT" section.)

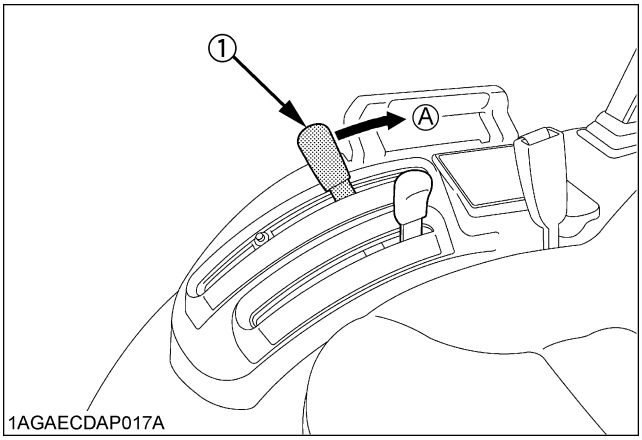

(1) Hydraulic control lever [Except B2320DTN, B2320HSDN] Position control lever [B2320DTN, B2320HSDN] *(A) "UP"*

5. Depress the Clutch Pedal.

■Clutch Pedal

CAUTION

To avoid personal injury:

- **Sudden release of the clutch may cause the tractor to lunge in an unexpected manner.**

The clutch is disengaged when the clutch pedal is fully pressed down.

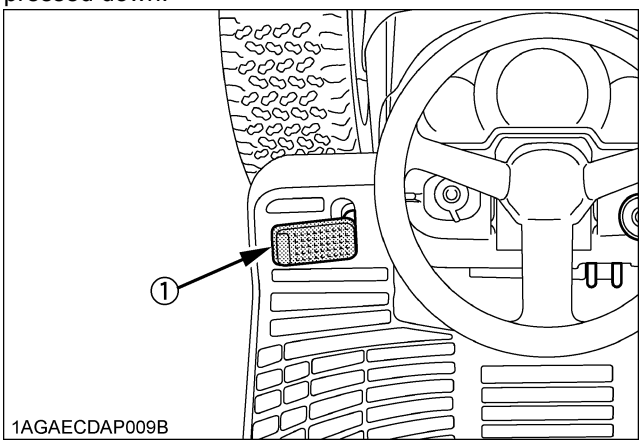

(1) Clutch pedal

IMPORTANT :

To help prevent premature clutch wear:

- The clutch pedal must be quickly disengaged and be slowly engaged.

https://truckmanualshub.com/

- Avoid operating the tractor with your foot resting on the clutch pedal.
- Select proper gear and engine speed depending on the type of job.

6. Selecting the Travel Speed.

■Range Gear Shift Lever (L-M-H) [HST Type]

The range gear shift can only be shifted when tractor is completely stopped and the clutch pedal is depressed.

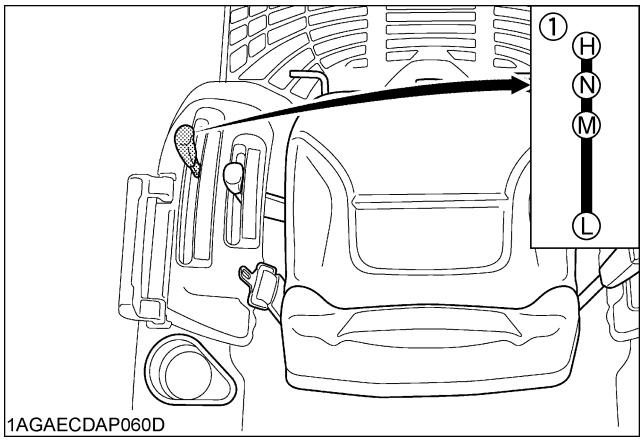

(1) Range gear shift lever (L-M-H)
(H) "HIGH"
(M) "MIDDLE"
(L) "LOW"
(N) "NEUTRAL POSITION"

IMPORTANT :

Depress the clutch pedal and stop the tractor.
Do not force the range gear shift lever.

- If it is difficult to shift the range gear shift lever into neutral position;
  (1) Depress the brake pedals firmly for several seconds.
  (2) Without reducing the brake pedal force, depress the clutch pedal and then shift the range gear shift lever.
- If it is difficult to shift the range gear shift lever into "L", "M" or "H" from neutral position;
  (1) Release the clutch pedal.
  (2) Slightly depress the speed control pedal to rotate the gears inside of transmission.
  (3) Release the speed control pedal to neutral position.
  (4) Depress the clutch pedal and then shift the range gear shift lever.

■Main Gear Shift Lever & Range Gear Shift Lever (L-M-H) [Manual Transmission Type]

The main gear shift lever pattern is in the form of an "H". The range gear shift lever moves in the form of an "I" in 3 stages, "HIGH", "MIDDLE" and "LOW". By combination of using the main gear shift lever and the range gear shift lever, 9 forward speeds and 3 reverse speeds are obtained.

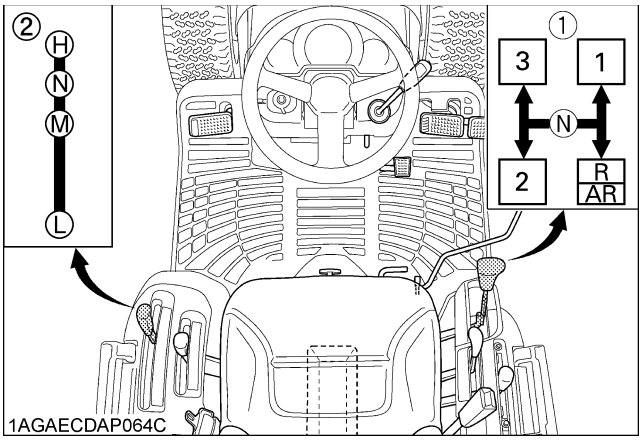

(1) Main gear shift lever
(2) Range gear shift lever (L-M-H)
(H) "HIGH"
(M) "MIDDLE"
(L) "LOW"
(N) "NEUTRAL POSITION"

IMPORTANT :

- To change speeds, press the clutch pedal completely down and stop the tractor before attempting to proceed with speed change.

NOTE :

- When you stand up from the seat with the main gear shift lever at engaged, the engine will stop regardless of whether the machine is moving or not.
  This is because the tractor is equipped with Operator Presence Control system (OPC).

https://truckmanualshub.com/

■Front Wheel Drive Lever

CAUTION

To avoid personal injury:

- **Do not engage the front wheel drive when traveling at road speed.**
- **When driving on icy, wet or loose surfaces, make sure the tractor is correctly ballasted to avoid skidding and loss of steering control. Operate at reduced speed and engage front wheel drive.**
- **An accident may occur if the tractor is suddenly braked, such as by heavy towed loads shifting forward or loss of control.**
- **The braking characteristics are different between two and four wheel drive. Be aware of the difference and use carefully.**

Use the lever to engage the front wheels with the tractor stopped. Shift the lever to "ON" to engage the front wheel drive.

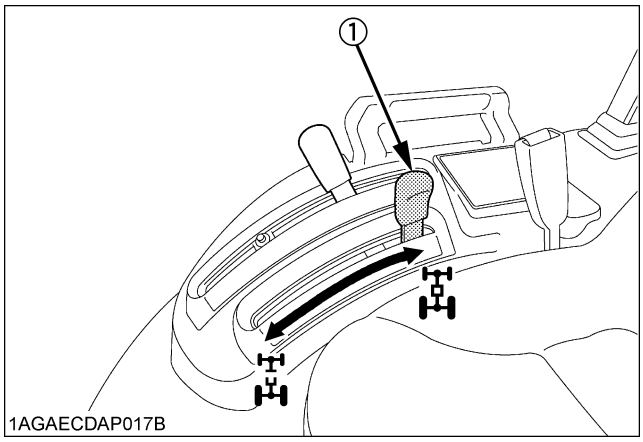

(1) Front wheel drive lever *"ON"* *"OFF"*

IMPORTANT :

- Depress the clutch pedal before engaging the front wheel drive lever.
- Tires will wear quickly if front wheel drive is engaged on paved roads.

◆ **Front wheel drive is effective for the following jobs:**

1. When greater pulling force is needed, such as working in a wet field, when pulling a trailer, or when working with a front-end loader.
2. When working in sandy soil.
3. When working on a hard soil where a rotary tiller might push the tractor forward.
4. Additional braking at reduced speeds.

7. Accelerate the engine.

■Hand Throttle Lever

Pulling the throttle lever back increases engine speed, and pushing it forward decreases engine speed.

■Foot Throttle [Manual Transmission Type]

Use the foot throttle when traveling on the road. Press down on it for higher speed. The foot throttle is interlocked with the hand throttle lever; when using the foot throttle, keep the hand throttle lever in low idling position.

[HST Type]

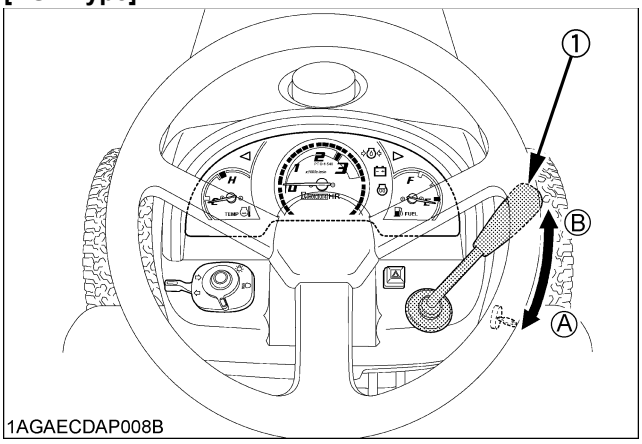

(1) Hand throttle lever *(A) "INCREASE"* *(B) "DECREASE"*

[Manual Transmission Type]

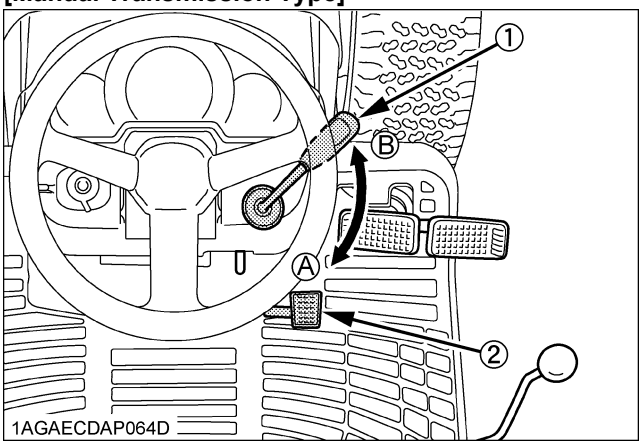

(1) Hand throttle lever *(A) "INCREASE"*
(2) Foot throttle *(B) "DECREASE"*

https://truckmanualshub.com/

8. Unlock the parking brake and slowly release the clutch.

■Parking Brake

To release the parking brake, depress the brake pedals again.

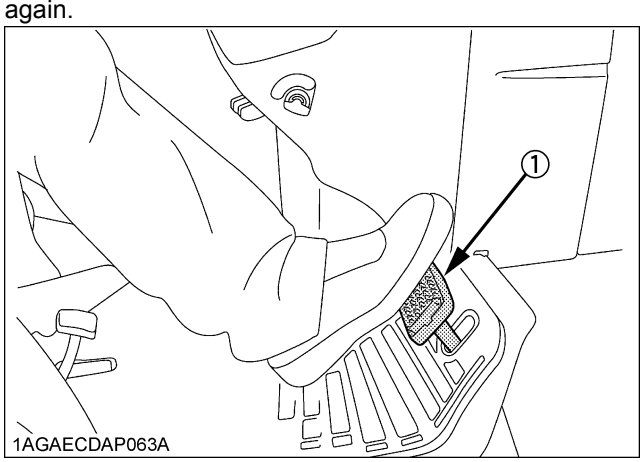

(1) Brake pedals

9. Depress the speed control pedal. [HST Type]

■Speed Control Pedal

WARNING

To avoid personal injury:

- **Do not operate if tractor moves on level ground with foot off of Speed Control Pedal.**
- **Consult your local KUBOTA Dealer.**

Forward Pedal

Depress the forward pedal with the toe of your right foot to move forward.

Reverse Pedal

Depress the reverse pedal with the heel of your right foot to move backward.

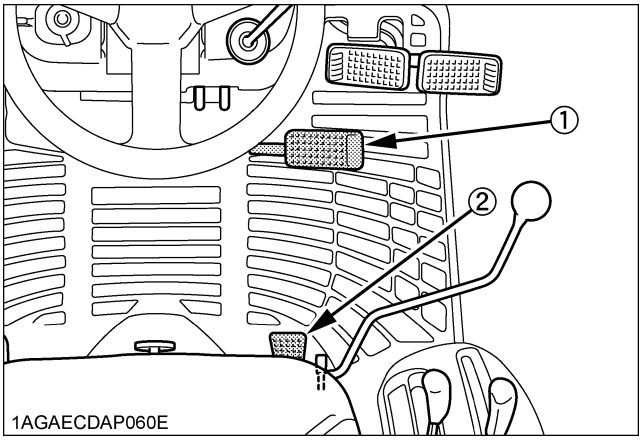

(1) Forward Pedal
(2) Reverse Pedal

IMPORTANT :

- To prevent the damage of speed set device, do not depress the reverse pedal when the speed set device is engaged.

https://truckmanualshub.com/

■Speed Set Device

The Speed Set Device is designed for tractor operating efficiency and operator comfort. This device will provide a constant forward operating speed by mechanically holding the speed control pedal at a selected position.

◆ **To engage Speed Set Device**

1. Accelerate speed to desired level using Speed Control Pedal, and push the speed set lever down to the "ON" position.
2. Release Speed Control Pedal and desired speed will be maintained.

◆ **To disengage Speed Set Device**

- Pull the speed set lever upward.
- Depress both brake pedals.

NOTE :

- If you step on the pedal on the forward acceleration side, the speed set device will disengage.
- The speed set device does not disengage when the individual right or left brake is applied.
- Speed set device will not operate in reverse.

IMPORTANT :

- To prevent the damage of speed set device, do not depress the reverse pedal when the speed set device is engaged.

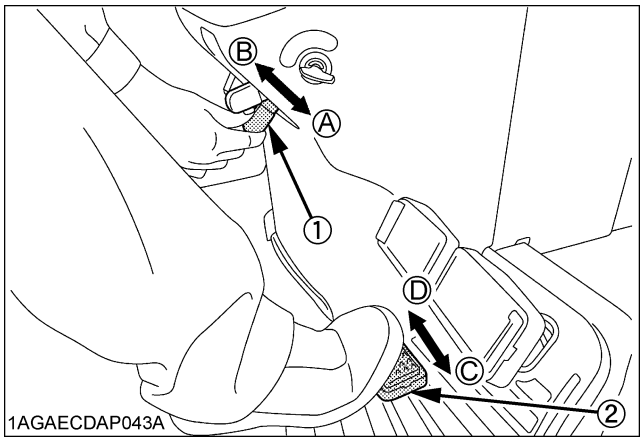

(1) Speed set lever *(A) "ON"*
(2) Speed control pedal *(B) "OFF"*
(C) "Increase"
(D) "Decrease"

NOTE :

- When you stand up from the seat with the speed control pedal stepped on or the speed set device engaged (ON), the engine will stop regardless of whether the machine is moving or not. This is because the tractor is equipped with Operator Presence Control system (OPC).

STOPPING

■Stopping

1. Slow the engine down.
2. Step on the clutch and brake pedal.
3. After the tractor has stopped, disengage the PTO, lower the implement to the ground, shift the transmission to neutral, release the clutch pedal, and set the parking brake.

CHECK DURING DRIVING

■Immediately Stop the Engine if:

- The engine suddenly slows down or accelerates.
- Unusual noises suddenly are heard.
- Exhaust fumes suddenly become very dark.

■Easy Checker (TM)

If the warning lamps of the Easy Checker(TM) come on during operation, immediately stop the engine, and find the cause as shown below.
Never operate the tractor while Easy Checker(TM) lamp is on.

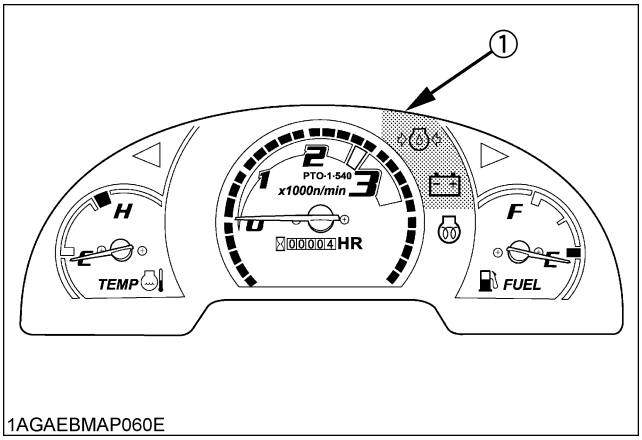

(1) Easy checker(TM)

Engine oil pressure
If the oil pressure in the engine goes below the prescribed level, the warning lamp in the Easy Checker(TM) will come on.
If this should happen during operation, and it does not go off when the engine is accelerated to more than 1000 rpm, check level of engine oil.
(See "Checking Engine Oil Level" in "DAILY CHECK" in "PERIODIC SERVICE" section.)

https://truckmanualshub.com/

Electrical charge
If the alternator is not charging the battery, the warning lamp in the Easy Checker(TM) will come on.
If this should happen during operation, check the electrical charging system or consult your local KUBOTA Dealer.

NOTE :
- For checking and servicing of your tractor, consult your local KUBOTA Dealer for instructions.

■Fuel Gauge

When the key switch is on, the fuel gauge indicates the fuel level.
Be careful not to empty the fuel tank. Otherwise air may enter the fuel system.
Should this happen, the system should be bled. (See "Bleeding Fuel System" in "SERVICE AS REQUIRED" in "PERIODIC SERVICE" section.)

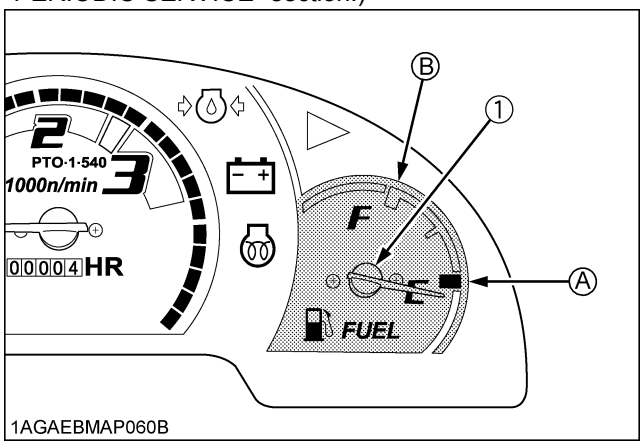

(1) Fuel gauge *(A) "EMPTY"* *(B) "FULL"*

■Coolant Temperature Gauge

CAUTION

To avoid personal injury:
- **Do not remove radiator cap until coolant temperature is well below its boiling point. Then loosen cap slightly to the stop to relieve any pressure before removing cap completely.**

1. With the key switch at "ON", this gauge indicates the temperature of the coolant. "C" for "cold" and "H" for "hot".
2. If the indicator reaches the "H" position (red zone), engine coolant is overheated. Check the tractor by referring to "TROUBLESHOOTING" section.

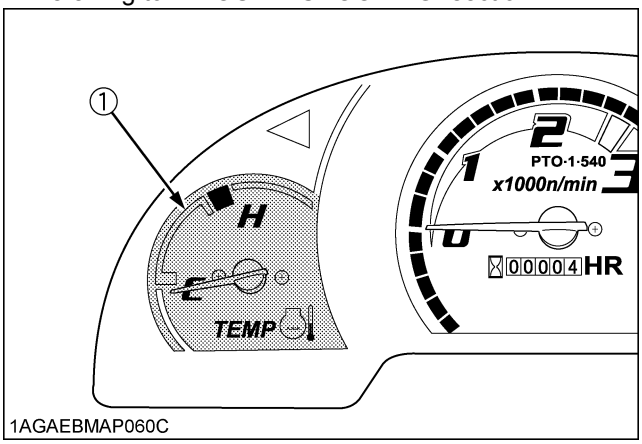

(1) Coolant temperature gauge

■Hourmeter / Tachometer

This meter gives readings for engine speed, PTO shaft speed and the hours the tractor has been operated.
1. The tachometer indicates the engine speed and the 540 PTO shaft speed location on the dial.
2. The hourmeter indicates in five digits the hours the tractor has been used; the last digit indicates 1/10 of an hour.

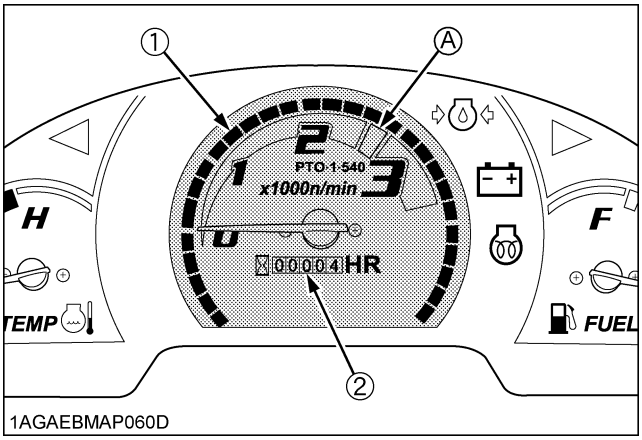

(1) Engine revolution *(A) PTO: 540 rpm*
(2) Hours used

https://truckmanualshub.com/

PARKING

■Parking Brake

CAUTION

To avoid personal injury:

- **Always set the parking brake, stop the engine and remove the key before leaving the tractor seat.**

1. When parking, be sure to set the parking brake.
   To set the parking brake;
   (1) Interlock the brake pedals.
   (2) Depress the brake pedals.
   (3) Latch the brake pedals with the parking brake lever.

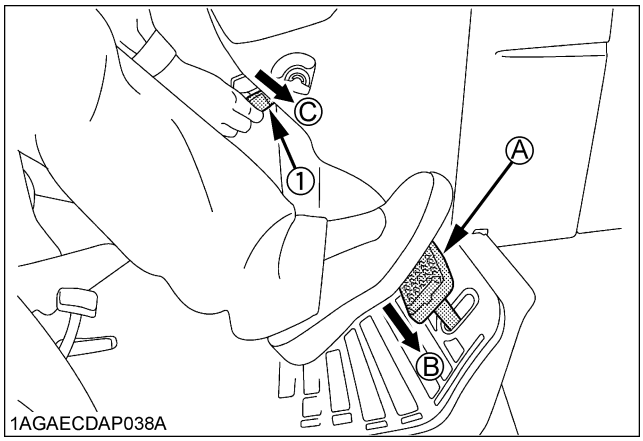

(1) Parking brake lever
(A) Interlock the brake pedals
(B) "DEPRESS"
(C) "PUSH-DOWN"

2. Before getting off the tractor, disengage the PTO, lower all implements to the ground, place all control levers in their neutral positions, set the parking brake, stop the engine and remove the key.
3. If it is necessary to park on an incline, be sure to chock the wheels to prevent accidental rolling of the machine.

OPERATING TECHNIQUES

■Differential Lock

WARNING

To avoid personal injury due to loss of steering control:

- **Do not operate the tractor at high speed with differential lock engaged.**
- **Do not attempt to turn with the differential lock engaged.**
- **Be sure to release the differential lock before making a turn in field conditions.**

If one of the rear wheels should slip, step on the differential lock pedal. Both wheels will turn together, then reduce slippage.
Differential lock is maintained only while the pedal is depressed.

[HST Type]

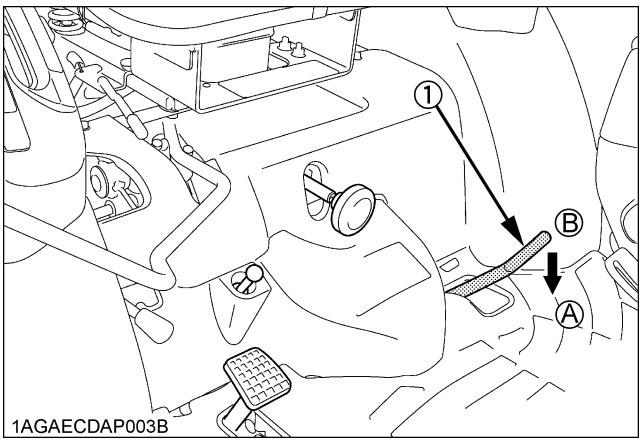

[Manual Transmission Type]

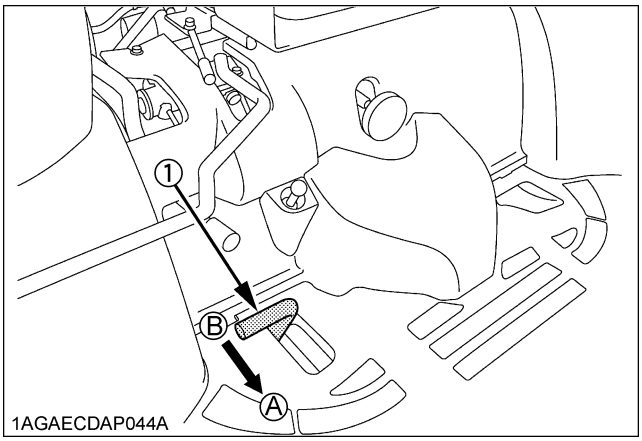

(1) Differential lock pedal
(A) Press to "ENGAGE"
(B) Release to "DISENGAGE"

https://truckmanualshub.com/

IMPORTANT :
- When using the differential lock, always slow the engine down.
- To prevent damage to power train, do not engage differential lock when one wheel is spinning and the other is completely stopped.
- If the differential lock cannot be released in the above manner, step lightly on the brake pedals alternately.

■Operating the Tractor on a Road

CAUTION

To avoid personal injury:
- **To help assure straight line stops when driving at transport speeds, lock the brake pedals together. Uneven braking at road speeds could cause the tractor to roll-over.**
- **When traveling on road with 3-point hitch mounted implement attached, be sure to have sufficient front weight on the tractor to maintain steering ability.**
- **Towed equipment (without brake) must not exceed 1.5 times the tractor weight when traveling on roads or at high speeds.**

Be sure SMV emblem and hazard light are clean and visible. If towed or rear-mounted equipment obstructs these safety devices, install SMV emblem and hazard light on equipment.
Consult your local KUBOTA dealer for further detail.

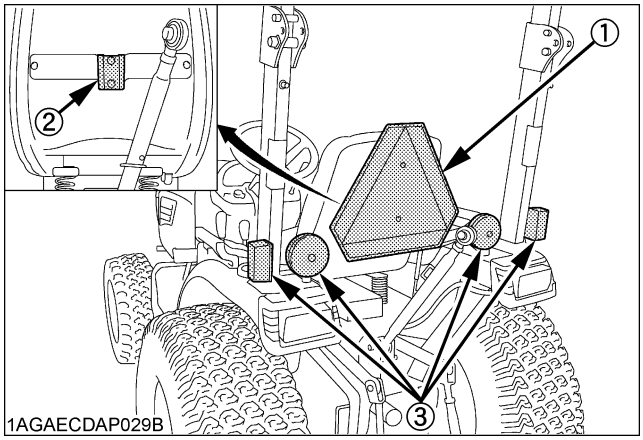

(1) SMV emblem
(2) Bracket
(3) Hazard light

■Operating on Slopes or Rough Terrain

CAUTION

To avoid personal injury:
- **Always back up when going up a steep slope. Driving forward could cause the tractor to tip over backward. Stay off hills and slopes too steep for safe operation.**
- **Avoid changing gears when climbing or descending a slope.**
- **If operating on a slope, never disengage the clutch or shift levers to neutral. Doing so could cause loss of control.**
- **Do not drive the tractor close to the edges of ditches or banks which may collapse under the weight of the tractor. Especially when the ground is loose or wet.**

1. Be sure wheel tread is adjusted to provide proper stability.
   (See "WHEEL ADJUSTMENT" in "TIRES, WHEELS AMD BALLAST" section.)
2. Slow down for slopes, rough ground, or sharp turns, especially when transporting heavy, rear mounted equipment.
3. Before descending a slope, shift to a gear low enough to control speed without using brakes.

■Directions for Use of Power Steering

1. Power steering is activated only while the engine is running. While the engine is stopped, the tractor functions in the same manner as tractors without power steering.
2. When the steering wheel is turned all the way to the stop, the relief valve is activated. Do not hold the steering wheel in this position for a long period of time.
3. Avoid turning the steering wheel while the tractor is stopped, or tires may wear out sooner.
4. The power steering mechanism makes the steering easier. Be careful when driving on a road at high speeds.

https://truckmanualshub.com/

PTO

PTO OPERATION

WARNING

To avoid personal injury:

- **To prevent damage to PTO driven equipment and possibly causing personal injury, use the 2nd rear PTO speed and mid-PTO speed only when these higher rpms are specifically recommended by the implement manufacturer.**

CAUTION

To avoid personal injury:

- **Disengage PTO, stop engine, and allow all rotating components to come to a complete stop before connecting, disconnecting, adjusting, or cleaning any PTO driven equipment.**

■PTO Gear Shift Lever

The tractor has two rear PTO speeds and one mid PTO speed.

1st-	Rear:	540	rpm
2nd-	Rear:	960	rpm
	Mid:	2500	rpm

To shift into 2nd PTO speed, loosen the bolt and slide the restricting plate to (D) position.

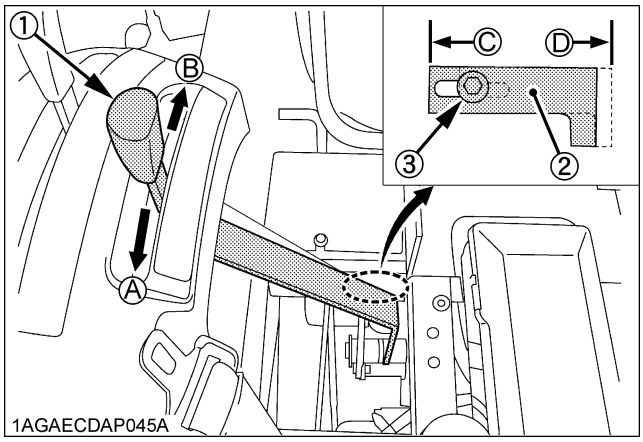

(1) PTO gear shift lever
(2) Restricting plate
(3) Bolt
(A) 1st (Rear: 540 rpm)
(B) 2nd (Rear: 960 rpm)
(Mid: 2500 rpm)
(C) Restricted position
(original position)
(D) Released position

IMPORTANT :

- Replace restricting plate to (C) position after use of the 2nd PTO speed.
- To avoid shock loads to the PTO, reduce engine speed when engaging the PTO, then open the throttle to the recommended speed.
- To avoid damage of transmission, do not shift PTO gear shift lever until the PTO has stopped completely.

◆ **Mid PTO [Except B2320DTN]**

The mid PTO is available for KUBOTA approved implements.

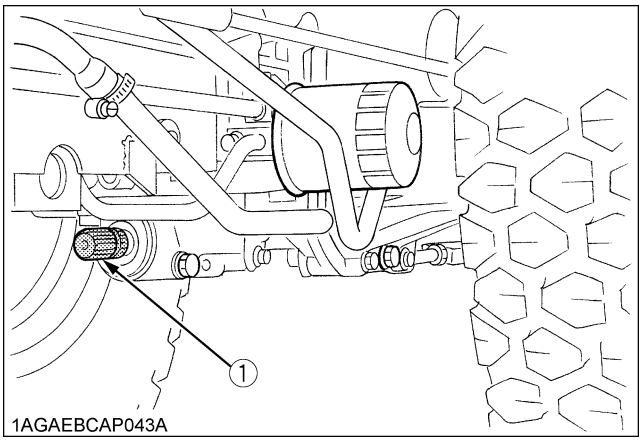

(1) Mid PTO

◆ **Rear PTO speed**

Model	Engine Speed rpm	PTO Speed rpm	Shaft
B2320 B2620 B2920	2773	540	6-Spline
	2722	960	

◆ **Mid PTO speed [Except B2320DTN]**

Model	Engine Speed rpm	Mid-PTO Speed rpm	Shaft
B2320 B2620 B2920	2750	2500	10-Spline USA No.5

NOTE :

- There is a PTO-1 (540rpm) indicator mark on the tachometer face. Be sure to check before operating.
- Tractor engine will not start if PTO gear shift lever is in the engaged ("ON") position.

https://truckmanualshub.com/

■PTO shaft Cover and Shaft Cap

Keep the PTO shaft cover in place at all times. Replace the PTO shaft cap when the PTO is not in use. Before connecting or disconnecting a drive shaft to PTO shaft, be sure the engine is "OFF" and raise up the PTO shaft cover.

Afterward be sure to return the PTO shaft cover to the "NORMAL POSITION".

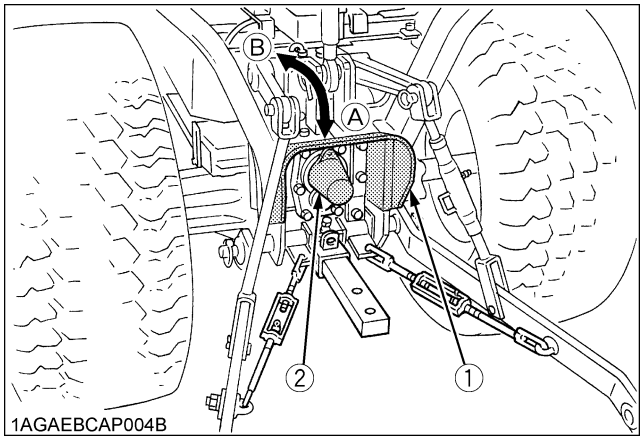

(1) PTO shaft cover
(2) PTO shaft cap
(A) "NORMAL POSITION"
(B) "RAISED POSITION"

■Stationary PTO

To park the tractor and use the PTO system (for chipper or pump, for example), start the PTO system in the following steps.

1. Apply the parking brakes and place blocks at the tires.
2. Make sure the shift levers are at NEUTRAL, and start the engine.
3. Set the PTO gear shift lever to "Rear PTO 1st" position.
4. Set the engine speed to provide recommended rear PTO speed.
5. Dismount the seat and tilt up quickly (engine will stop if there is a delay in tilting up the seat).

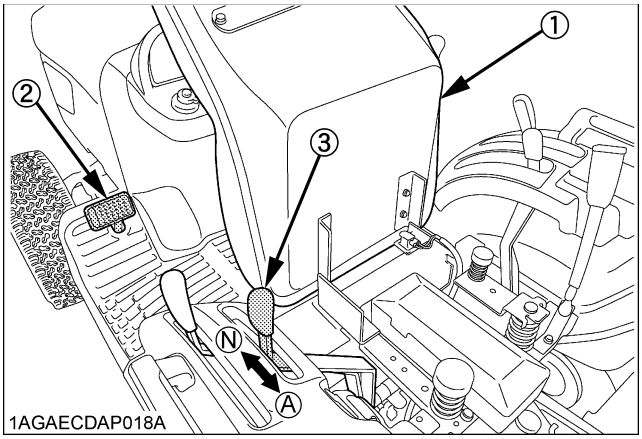

(1) Seat
(2) Clutch pedal
(3) PTO gear shift lever
(A) Rear PTO "1st"
Mid PTO "OFF"
(N) "NEUTRAL POSITION"

NOTE :

- If the PTO system is engaged and you stand up from the seat or the seat is not tilted forward, the engine stops automatically after standing up.

https://truckmanualshub.com/

THREE-POINT HITCH & DRAWBAR

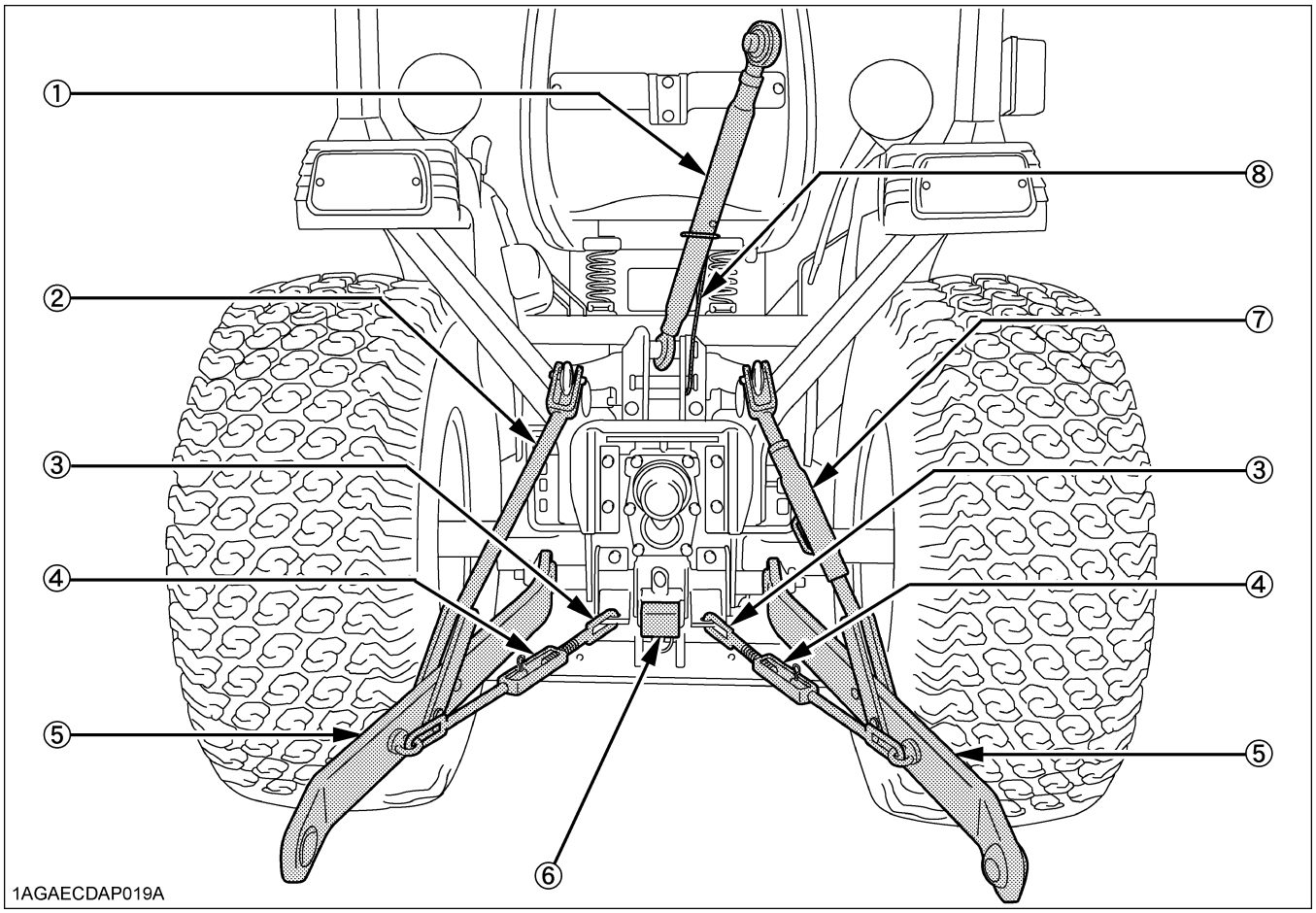

(1) Top link
(2) Lifting rod (Left)
(3) Check chains
(4) Turnbuckle
(5) Lower link
(6) Drawbar
(7) Lifting rod (Right)
(8) Top link holder

https://truckmanualshub.com/

3-POINT HITCH

1. Make preparations for attaching implement.

■Selecting the holes of lifting rods and lower links

There are two holes in the lower links. For most operations the lifting rods should be attached to the (A) holes.

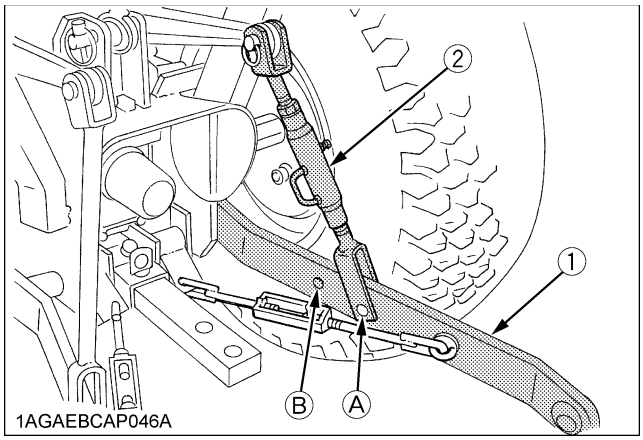

(1) Lower links holes:(A),(B)
(2) Lifting rods

NOTE :
- The lifting rods may be attached to (B) hole for higher lifting height. (with reduced lifting force)

■Selecting the Top Link Mounting Holes

Select the proper set of holes by referring to the "Hydraulic Control Unit Use Reference Chart" in "HYDRAULIC UNIT" section.

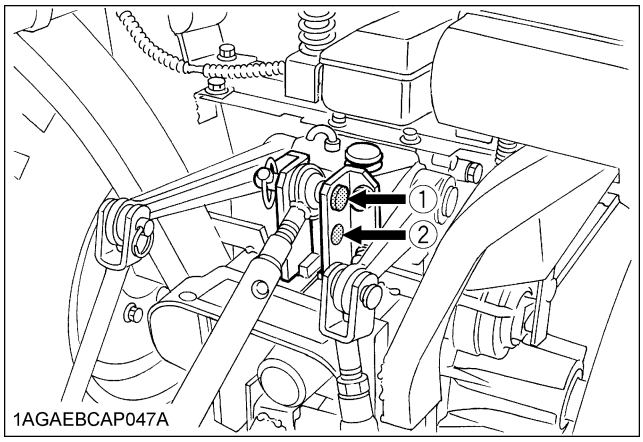

■Drawbar

Remove the drawbar if a close mounted implement is being attached.

2. Attaching and detaching implements

CAUTION

To avoid personal injury:
- **Be sure to stop the engine and remove the key.**
- **Do not stand between tractor and implement unless parking brake is applied.**
- **Before attaching or detaching implement, locate the tractor and implement on a firm, flat and level surface.**
- **Whenever an implement or other attachment is connected to the tractor 3-point hitch, check full range of operation for interference, binding or PTO driveline separation.**

■Lifting Rod (Right)

Level a 3-point mounted implement from side to side by turning the adjusting handle to shorten or lengthen the adjustable lifting rod with the implement on the ground.
After adjustment, tighten the lock nut securely.

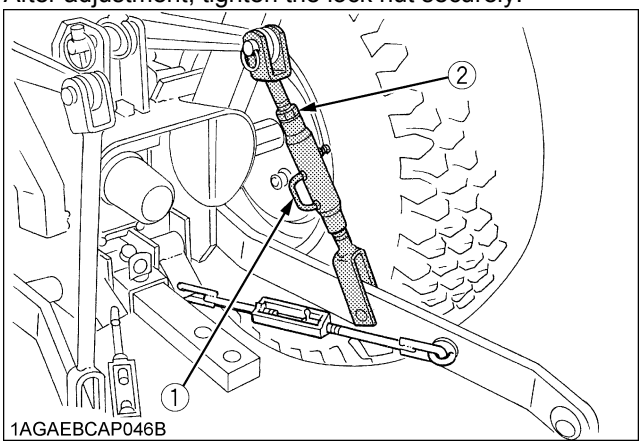

(1) Adjusting handle
(2) Lock nut

■Top Link

1. Adjust the angle of the implement to the desired position by shortening or lengthening the top link.
2. The proper length of the top link varies according to the type of implement being used.

https://truckmanualshub.com/

■Check Chains

Remove the snap pin and adjust the turnbuckle to control horizontal sway of the implement.
After adjustment, re-set the snap pin.

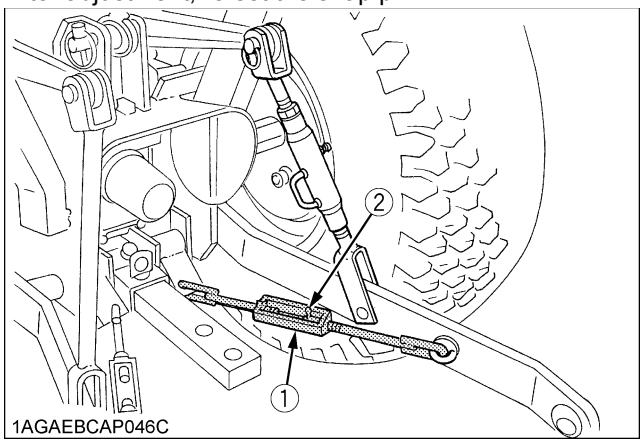

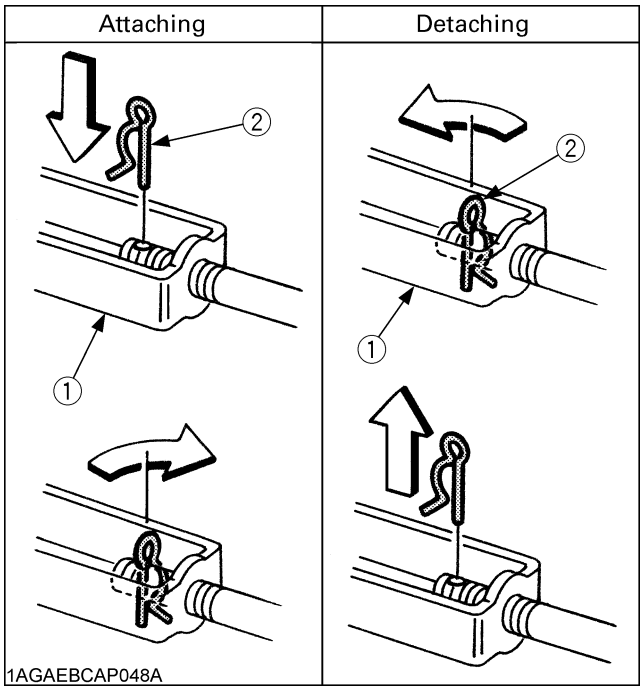

(1) Turnbuckle
(2) Snap pin

DRAWBAR

WARNING

To avoid personal injury:

- **Never pull from the top link, the rear axle or any point above the drawbar. Doing so could cause the tractor to tip over rearward causing personal injury or death.**

■Adjusting Drawbar Length

When towing an implement, use of (B) hole in drawbar is recommended.
The acceptable drawbar load is provided in the "IMPLEMENT LIMITATIONS" section.

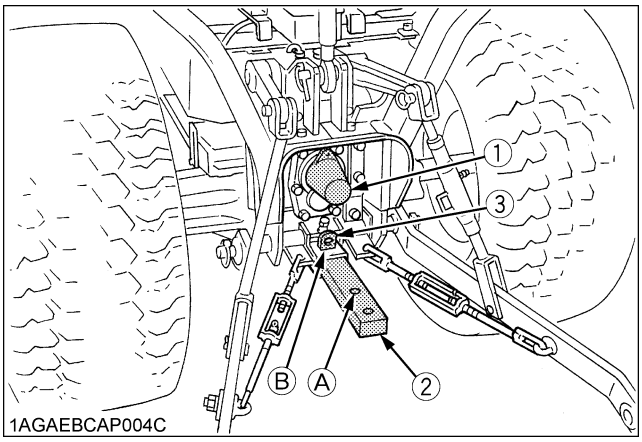

(1) PTO shaft
(2) Drawbar
(3) Drawbar pin

Holes : (A),(B)

https://truckmanualshub.com/

HYDRAULIC UNIT

3-POINT HITCH CONTROL SYSTEM

■Hydraulic Control

[Except B2320DTN, B2320HSDN]

Operating the hydraulic control lever actuates the hydraulic lift arm, which controls the height of 3-point hitch mounted implement.

To lower implement, push the lever forward; to raise it, pull the lever back. After setting the implement to the desired height, move the lever back to "NEUTRAL" position.

The lever position (C) enables you to control the valve with ease in increments of approximately 1/4 inches at the lower link end.

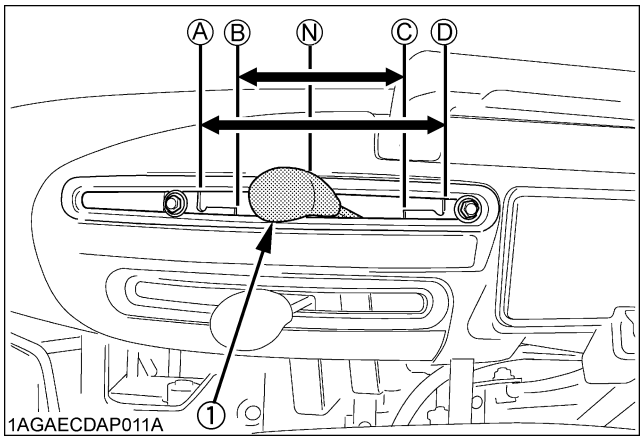

(1) Hydraulic control lever

(A) "DOWN"
(B) "SLOW DOWN"
(N) "NEUTRAL"
(C) "SLOW UP"
(D) "UP"

■Position Control

[B2320DTN, B2320HSDN]

This will control the working depth of 3-point hitch mounted implement regardless of the amount of pull required.

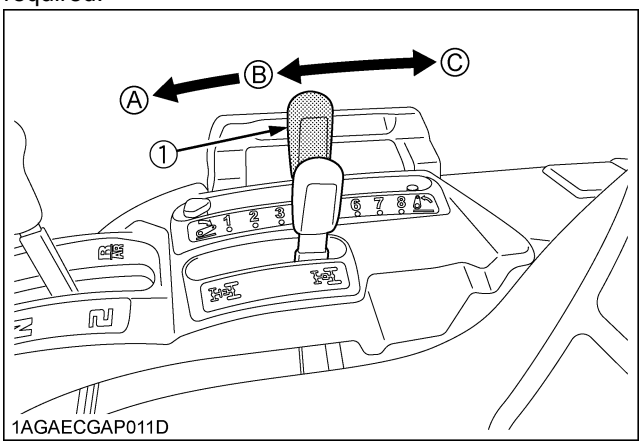

(1) Position control lever

(A) "FLOAT"
(B) "DOWN"
(C) "UP"

IMPORTANT :

- If the 3-point hitch can not be raised by setting the hydraulic control lever to the UP position after long term storage or when changing the transmission oil, turn steering wheel to the right and left several times to bleed air from the system.
- Do not operate until the engine is warmed up. If operation is attempted when the engine is still cold, the hydraulic system may be damaged.
- If noises are heard when implement is lifting after the hydraulic control lever has been activated, the hydraulic mechanism is not adjusted properly. Unless corrected, the unit will be damaged. Contact your KUBOTA Dealer for adjustment.

https://truckmanualshub.com/

■Implement Lowering Limit

[Except B2320DTN, B2320HSDN]

The implement lowering limit can be changed by shifting the locker (A).

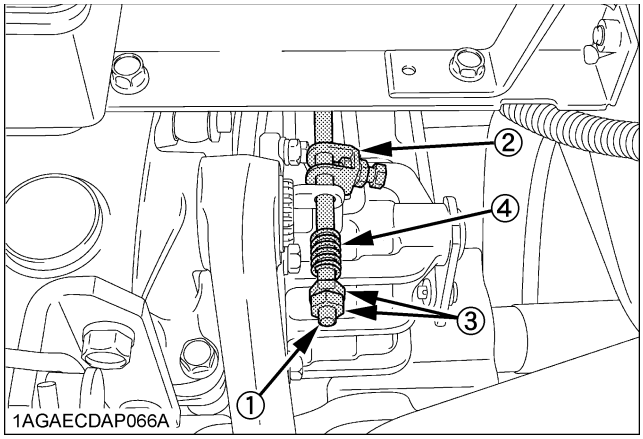

(1) Interlock rod
(2) Locker (A)
(3) Nuts
(4) Spring

Lower Limit

The lower limit can be changed by adjusting the position of locker (A). Shifting the locker (A) backward raises the lower limit and shifting it forward lowers the lower limit.

■3-point Hitch Lowering Speed

CAUTION

To avoid personal injury:

- **Fast lowering speed may cause damage or injury. Lowering speed of implement should be adjusted to two or more seconds.**

The lowering speed of the 3-point hitch can be controlled by adjusting the 3-point hitch lowering speed knob.

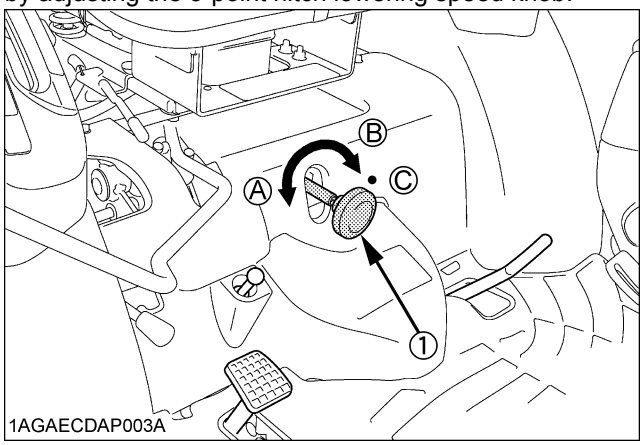

(1) 3-point hitch lowering speed knob
(A) "FAST"
(B) "SLOW"
(C) "LOCK"

AUXILIARY HYDRAULICS

Hydraulic outlet is provided on the tractor.
(without loader valve only)

■Hydraulic Block Type Outlet

Hydraulic block type outlet is useful when adding hydraulically operated equipment such as front end loader, front blade, etc.

When implement is attached

1. Remove the block cover.
2. Attach the block outlet cover. (option)

[B2320DT]

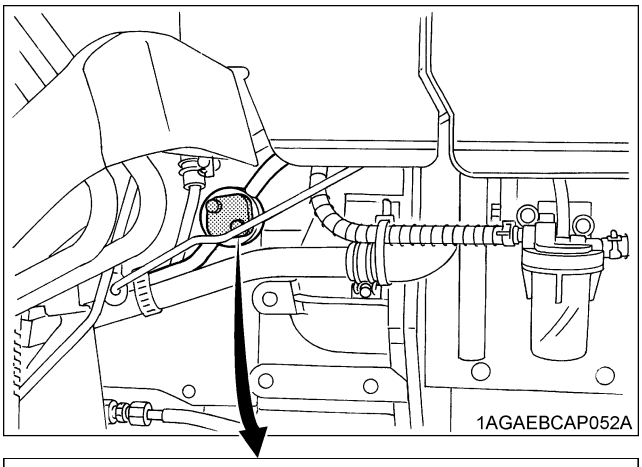

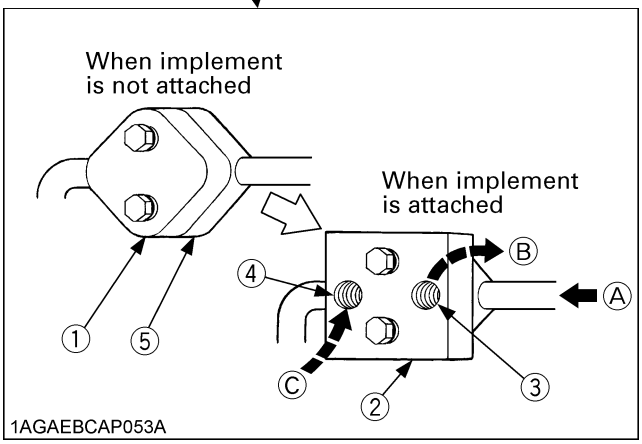

(1) Block cover
(2) Block outlet cover (option)
(3) Outlet
(4) Inlet
(5) Hydraulic block
(A) From gear pump
(B) To implement inlet
Max. flow
17.9 L/min
(4.7 U.S.gals./min)
No relief valve in the hydraulic block.
(C) From implement outlet

IMPORTANT :

- For hydraulic block type outlet, be sure to use the control valve of the "Power beyond type" with relief valve that has a third line return to tank for the operation of hydraulic block.

https://truckmanualshub.com/

NOTE :
- The "tank" port flow from implement valve should be connected to the port located on the right hand side of transmission case.

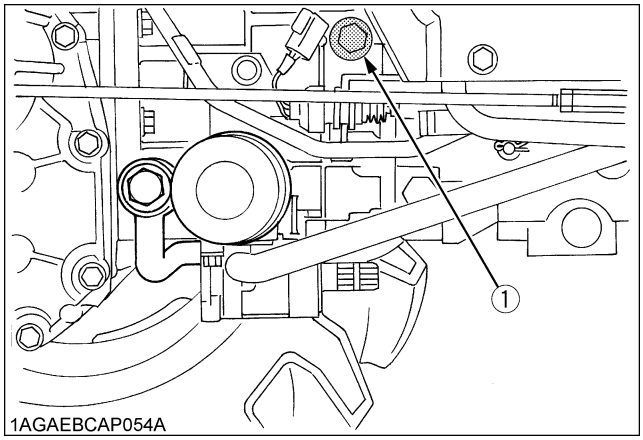

(1) Return port

[Rear outlet] [B2320DTN, B2320HSDN]

Two hydraulic outlets are provided on the tractor.

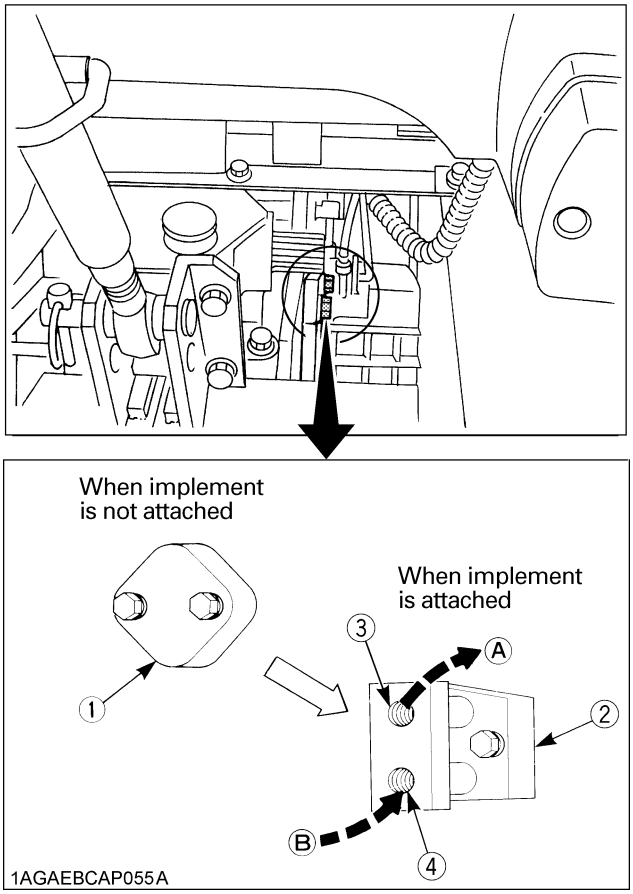

(1) Block cover
(2) Block outlet cover (option)
(3) Outlet
(4) Inlet

(A) To implement inlet
Max. flow
16.6 L/min (4.4 U.S. gals/min)
Max. pressure
13.2 to 13.7 Mpa
(135 to 140 kgf/cm^2
1920 to 1992 psi)
(B) From implement outlet

NOTE :
- If the implement control valve has a relief valve, the tank port flow from implement should be connected to the port located on the right hand side of transmission case.

https://truckmanualshub.com/

DUAL REMOTE HYDRAULIC CONTROL SYSTEM (if equipped)

The tractor is equipped with the double-acting 2-segment hydraulic control valve for front loader.

To apply the hydraulic power take-off for general attachments, keep the following point in mind.

■Control Lever and Hydraulic Hose Connections

Connect the control lever in its specified direction and the hydraulic hoses to their specified ports.

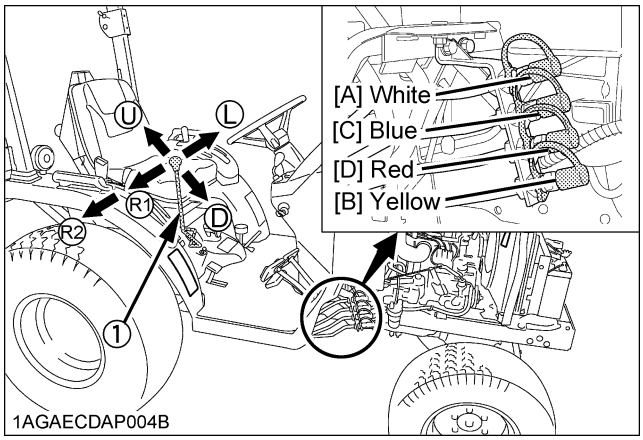

(1) Loader / Remote control valve lever

(R) "RIGHT"
(L) "LEFT"
(U) "UP"
(D) "DOWN"

Pressure ⟶
Returning ⟵

Hydraulic outlet ports of first segment

Lever		UP		DOWN	
Port	[A]	In	⟵	Out	⟶
	[B]	Out	⟶	In	⟵

Hydraulic outlet ports of second segment

Lever		RIGHT		LEFT	
Port	[C]	In	⟵	Out	⟶
	[D]	Out	⟶	In	⟵

IMPORTANT :

To avoid damage of the attachments:

- Do not connect attachments through the hydraulic motor to the [C] and [D] ports. If the control lever is moved to the Regeneration position (R1), the seals on the hydraulic motor will be damaged.
- This control valve is provided with the Regeneration position. When the [C] and [D] ports are used to take off hydraulic power for the hydraulic cylinder, be sure to connect the [C] port to the "Head-End" side port of the hydraulic cylinder.
- Make the following connections when using this valve to take off hydraulic power for the hydraulic cylinder.

Colored Coupler	Hydraulic Cylinder port
[B: Yellow], [C: Blue]	Head-End side
[A: White], [D: Red]	Rod-End side

■Loader / Remote Control Valve Lever

1. Before moving the lever, make sure that the hydraulic hoses for attachments are connected.
2. Move the lever diagonally (a, b, c shown in the figure), and the first and second segments can be controlled at once.

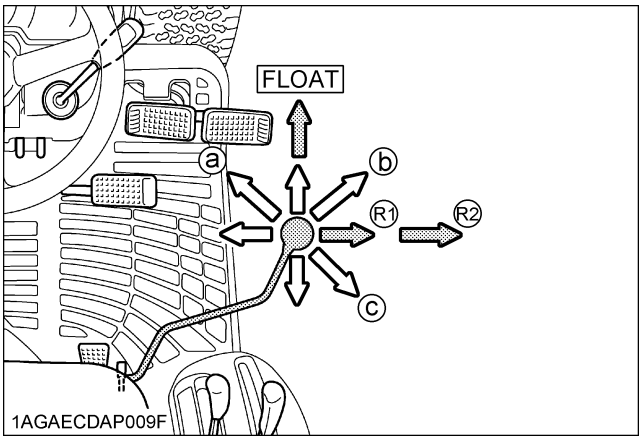

NOTE :

- Move the lever to the "FLOAT" position, and it will be held there by the detent mechanism. To use the valve as a floating valve with detents, connect the hydraulic hoses to ports [A] and [B].
- When taking off hydraulic power from port [D], the flow rate can be adjusted in two stages with the lever.
  The flow rate is high at position (R1) and low at position (R2). Move the lever to position (R1) or (R2) depending on the attachment in use.

https://truckmanualshub.com/

■Valve Lock

CAUTION

To avoid injury from crushing:

- **Do not utilize the valve lock for machine maintenance or repair.**
- **The valve lock is to prevent accidental actuation when implement is not in use or during transport.**

The control valve is equipped with a valve lock feature. The control valve is locked in the "NEUTRAL" position. The lock is not intended and will not prevent a leak down of the implement during the period of storage.

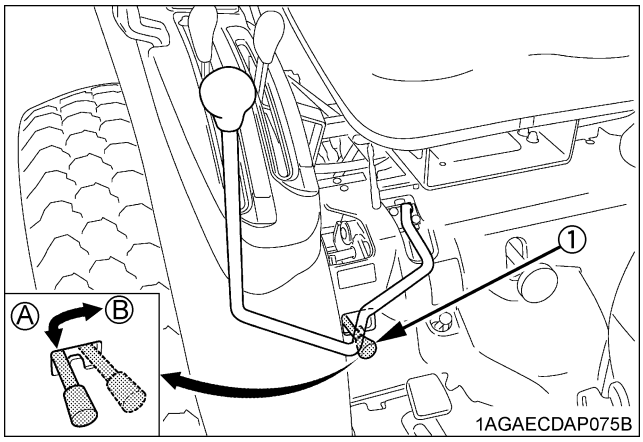

(1) Lock lever

(A) "LOCK"
(B) "UNLOCK"

https://truckmanualshub.com/

■Hydraulic Control Unit Use Reference Chart

In order to handle the hydraulics properly, the operator must be familiar with the following. Though this information may not be applicable to types of implements and soil conditions, it is useful for general conditions.

Implement	 Soil condition	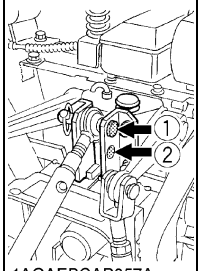 1AGAEBCAP057A Top link mounting holes	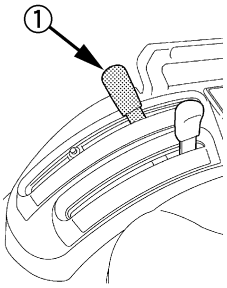 1AGAECDAP017C (1)Hydraulic control lever / Position control lever	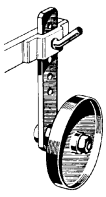 1AGAEBCAP0590 Gauge Wheel	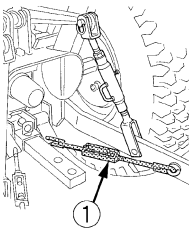 1AGAEBCAP060A (1)Check chains	Remarks
Moldboard plow	Light soil Medium soil heavy soil	(1) is standard. (2) is used only when there is some obstacle that prevents you from using the standard.	Hydraulic control [Except B2320 DTN, B2320HSDN] Position control [B2320DTN, B2320HSDN]	YES/NO	Loose	Adjust the check chains so that the implement can move 5 to 6cm (2.0 to 2.4 in.) laterally. For implements with gauge wheels, lower the implements to the ground.
Disc plow	---					
Harrower (spike, springtooth, disc type)	---					
Sub-soiler....						
Weeder ridger..	---			YES	Tighten	Check chains should be tight enough to prevent excessive implement movement when implement is in raised position. For implements with gauge wheels, lower the implements to the ground.
Earthmover, digger, scraper, manure fork, rear carrier....				YES/NO		
Mower (mid-and rear-mount type), hayrake, tedder....						

https://truckmanualshub.com/

TIRES, WHEELS AND BALLAST

TIRES

WARNING

To avoid personal injury:

- **Do not attempt to mount a tire on a rim. This should be done by a qualified person with the proper equipment.**
- **Always maintain the correct tire pressure. Do not inflate tires above the recommended pressure shown in the operator's manual.**

IMPORTANT :

- Do not use tires other than those approved by KUBOTA.

■Inflation Pressure

Though the tire pressure is factory-set to the prescribed level, it naturally drops slowly over the course of time. Thus, check it regularly and inflate as necessary.

	Tire sizes	Inflation Pressure
Rear	8 - 16, 4PR	160kPa(1.6kgf/cm², 23psi)
	8.3 - 16, 6PR	150kPa(1.5kgf/cm², 22psi)
	9.5 - 16, 4PR	140kPa(1.4kgf/cm², 20psi)
	9.5 - 18, 4PR	160kPa(1.6kgf/cm², 23psi)
	315/75D - 15, 4PR	100kPa(1.0kgf/cm², 14psi)
	11.2 - 16, 4PR	130kPa(1.3kgf/cm², 18psi)
	12 - 16.5, 4PR	270kPa(2.7kgf/cm², 40psi)
	31x13.5 - 15, 4PR	140kPa(1.4kgf/cm², 20psi)
	31x15.5 - 15, 4PR	140kPa(1.4kgf/cm², 20psi)
	33x12.5 - 15, 4PR	140kPa(1.4kgf/cm², 20psi)
Front	5 - 12, 4PR	240kPa(2.4kgf/cm², 34psi)
	6 - 12, 4PR	200kPa(2.0kgf/cm², 28psi)
	7 - 12, 4PR	170kPa(1.7kgf/cm², 24psi)
	21x8.00 - 10, 4PR	160kPa(1.6kgf/cm², 23psi)
	22x8.50 - 12, 4PR	160kPa(1.6kgf/cm², 23psi)
	23x8.50 - 12Turf, 4PR	150kPa(1.5kgf/cm², 22psi)
	23x8.50 - 12Ind., 4PR	250kPa(2.5kgf/cm², 35psi)
	24x8.50 - 12, 4PR	160kPa(1.6kgf/cm², 23psi)

NOTE :

- Maintain the maximum recommended pressure in the front tires, when using a front loader or equipped with a full load of front weights.

■Dual Tires

Dual tires are not approved.

WHEEL ADJUSTMENT

CAUTION

To avoid personal injury:

- **When working on slopes or when working with trailer, set the wheel tread as wide as practical for maximum stability.**
- **Support tractor securely on stands before removing a wheel.**
- **Do not work under any hydraulically supported devices. They can settle, suddenly leak down, or be accidentally lowered. If necessary to work under tractor or any machine elements for servicing or adjustment, securely support them with stands or suitable blocking beforehand.**
- **Never operate tractor with a loose rim, wheel, or axle.**

■Front Wheels

Front tread width can not be adjusted.

IMPORTANT :

- Do not turn front discs to obtain wider tread.
- When re-fitting or adjusting a wheel, tighten the bolts to the following torques then recheck after driving the tractor 200 m (200 yards) and 10 times of shuttle movement by 5 m (5 yards), and thereafter according to service interval. (See "MAINTENANCE" section.)

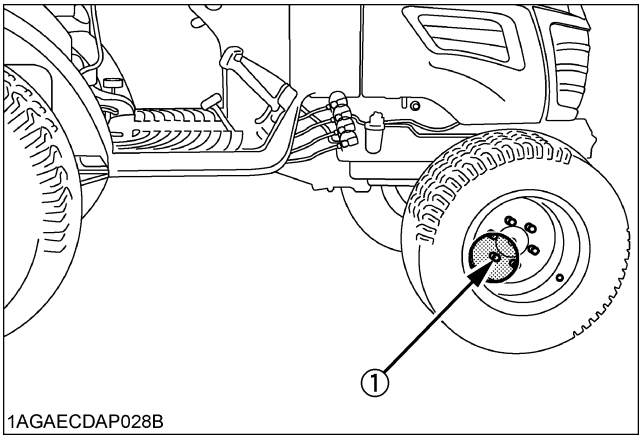

(1) 79 to 92 N-m (8.1 to 9.4 kgf-m, 58.3 to 67.9 ft-lbs)

https://truckmanualshub.com/

◆ **USA models**

Tire	Models	Tread
5 - 12 Farm	B2320 HSDN B2320 DTN	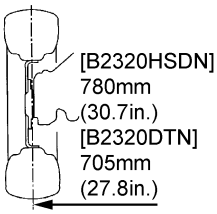
6 - 12 Farm	B2320 HSDN B2320 DTN B2320	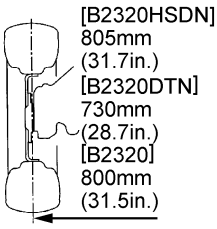
7 - 12 Farm	B2620 B2920	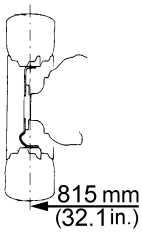
23x8.50 - 12 Turf	B2320 B2620 B2920	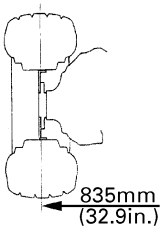
21x8.00 - 10 Bar	B2320 B2620 B2920	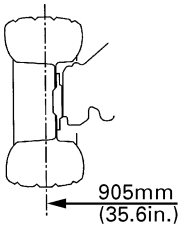
23x8.50 - 12 Ind.	B2320 B2620 B2920	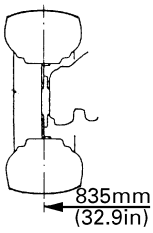

◆ **Except USA models**

Tire	Models	Tread
6 - 12 Farm	B2320	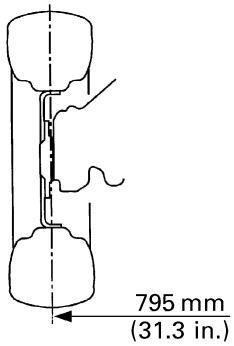
7 - 12 Farm	B2620 B2920	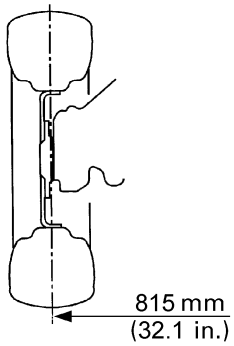
22x8.50 - 12 Turf	B2320	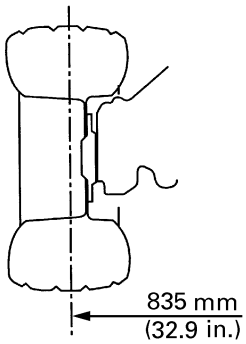
24x8.50 - 12 Turf	B2620 B2920	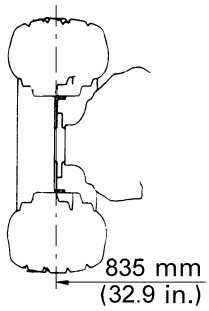

https://truckmanualshub.com/

■Rear Wheels

[B2320DTN, B2320HSDN]

Rear tread width can be adjusted as shown.

To change the tread width

1. Loosen the nut of cotter pin bolt.
2. Remove the snap pin and wheel hub pin.
3. Change the tread to the desired position.
4. Re-set the wheel hub pin, snap pin and cotter pin bolt.

◆ **USA models**

Tire	Models	Tread
8 - 16 Farm	B2320 HSDN B2320 DTN	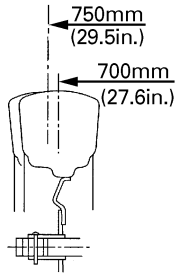
8.3 - 16 Farm	B2320 HSDN B2320 DTN	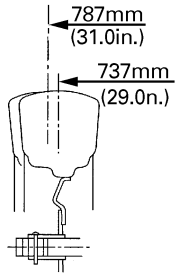

IMPORTANT :

- Always attach tires as shown in the drawings.
- If not attached as illustrated, transmission parts may be damaged.
- When re-fitting or adjusting a wheel, tighten the bolts to the following torques then recheck after driving the tractor 200 m (200 yards) and 10 times of shuttle movement by 5 m (5 yards), and thereafter according to service interval. (See "MAINTENANCE" section.)

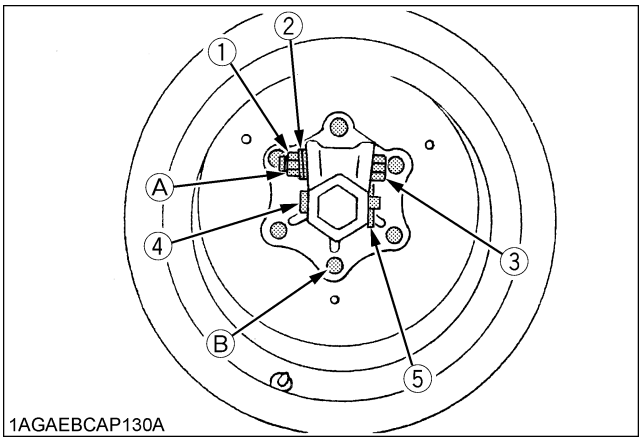

(1) Nut
(2) Spring washer
(3) Bolt
(4) Wheel hub pin
(5) Snap pin

(A) 123 to 147 N-m (12.6 to 15.0 kgf-m, 91 to 108 ft-lbs)
(B) 108 to 125 N-m (11.0 to 12.8 kgf-m, 80 to 93 ft-lbs)

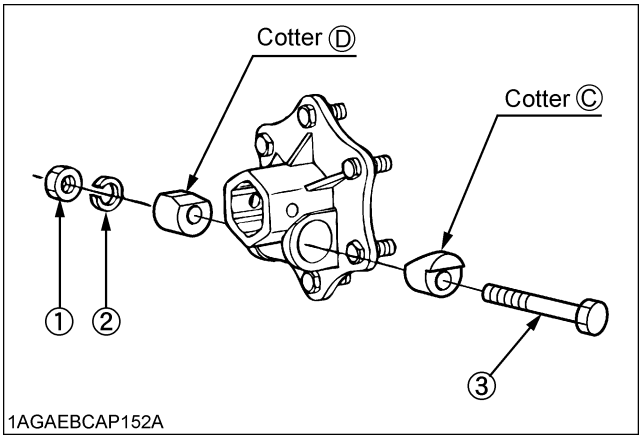

(1) Nut
(2) Spring washer
(3) Bolt
(C) Cotter
(D) Cotter

IMPORTANT :

- Insert the bolt from the indented side of the cotter (C) as shown.

https://truckmanualshub.com/

[Except B2320DTN, B2320HSDN]
Rear tread width can not be adjusted.

◆ **USA models**

Tire	Models	Tread
9.5 - 16 Farm	B2320	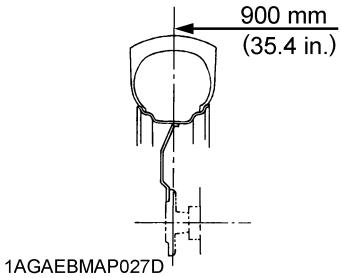
11.2 - 16 Farm	B2620 B2920	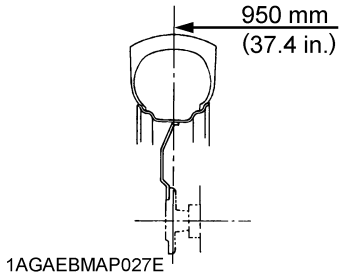
33x 12.5 - 15 Turf	B2320 B2620 B2920	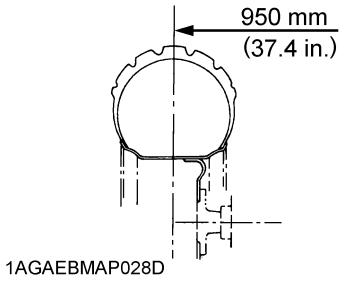
31x 15.5 - 15 Bar	B2320 B2620 B2920	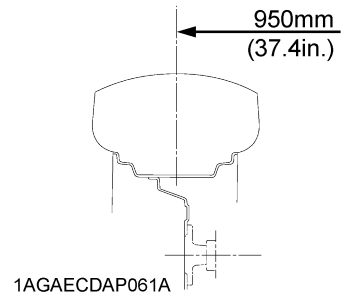
12 - 16.5 Ind.	B2320 B2620 B2920	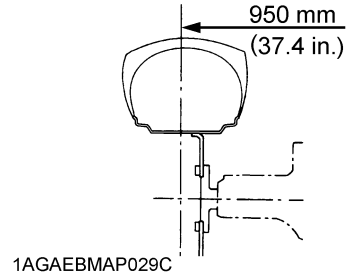

◆ **Except USA models**

Tire	Models	Tread
9.5 - 16 Farm	B2320	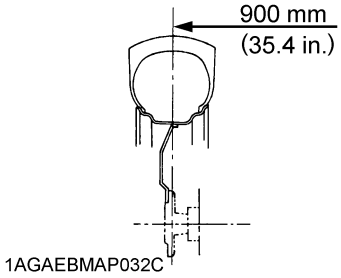
9.5 - 18 Farm	B2620 B2920	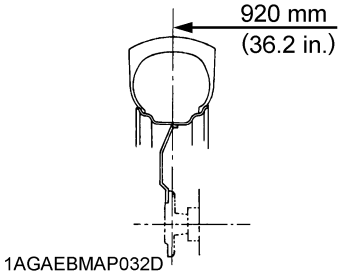
31x 13.5 - 15 Turf	B2320	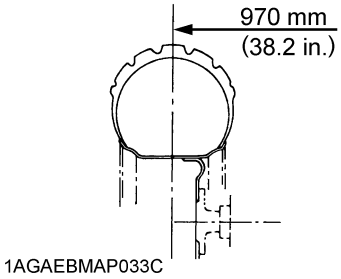
315/75D - 15 Turf	B2620 B2920	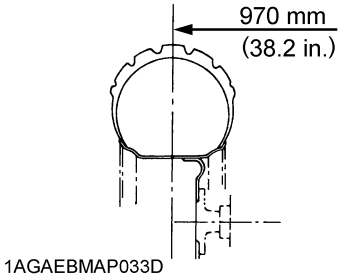

https://truckmanualshub.com/

IMPORTANT :
- Always attach tires as shown in the drawings.
- If not attached as illustrated, transmission parts may be damaged.
- When re-fitting or adjusting a wheel, tighten the bolts to the following torques then recheck after driving the tractor 200 m (200 yards) and 10 times of shuttle movement by 5 m (5 yards), and thereafter according to service interval. (See "MAINTENANCE" section.)

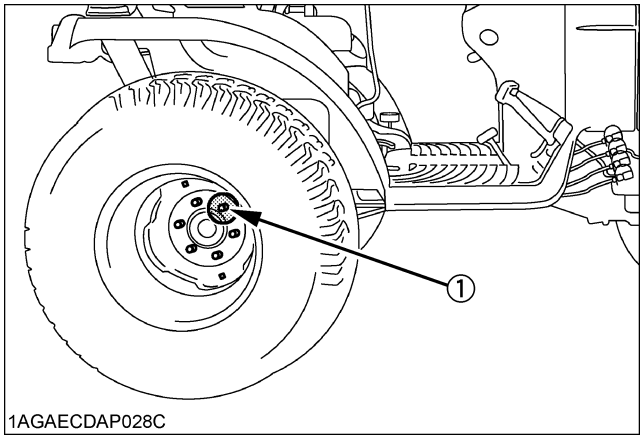

(1) 145 to 150 N-m (14.8 to 15.3 kgf-m, 107.0 to 110.6 ft-lbs)

[Wheels with beveled or tapered holes]
- Use the tapered side of lug nut.

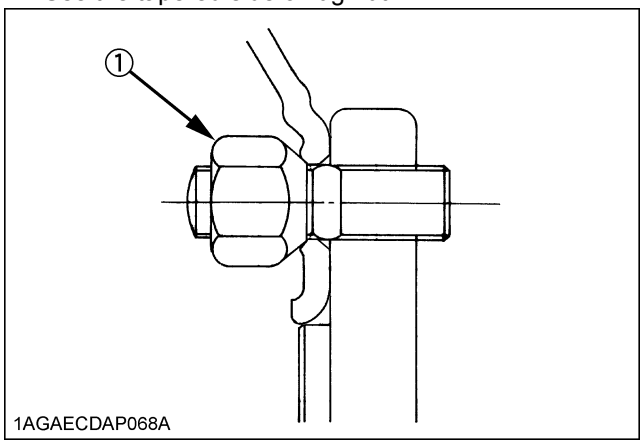

(1) Lug nut

[Wheels without beveled or tapered holes]
- Use the flat side of the lug nut. Make sure to apply the spring washer.

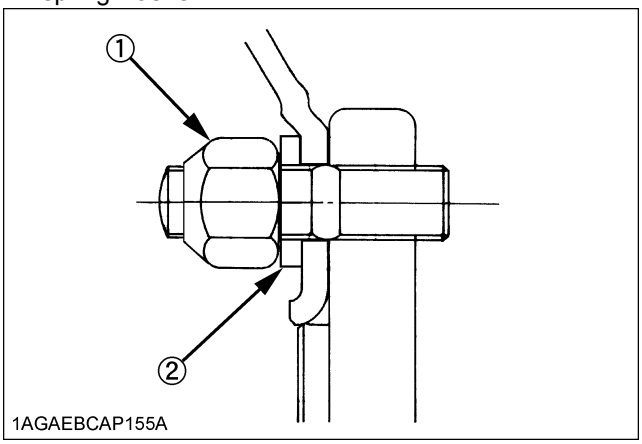

(1) Lug nut
(2) Spring washer

BALLAST

CAUTION

To avoid personal injury:
- **Additional ballast will be needed for transporting heavy implements. When the implement is raised, drive slowly over rough ground, regardless of how much ballast is used.**
- **Do not fill the front wheels with liquid.**

■Front Ballast

Add weights if needed for stability and improving traction. Heavy pulling and heavy rear mounted implements tend to lift front wheels. Add enough ballast to maintain steering control and prevent tip over.
Remove weight when no longer needed.

◆ Front End Weights (option)

The front end weights can be attached to the bumper.
See your implement operator's manual for required number of weights or consult your local KUBOTA Dealer to use.

NOTE :

[For installation of up to three weights]
- Besides the weight, mounting bolt kit(s) are required for mounting the weight.

[For installation of up to five weights]
- Besides the weight, a front weight bracket and mounting bolt kit(s) are required for mounting the weight.

https://truckmanualshub.com/

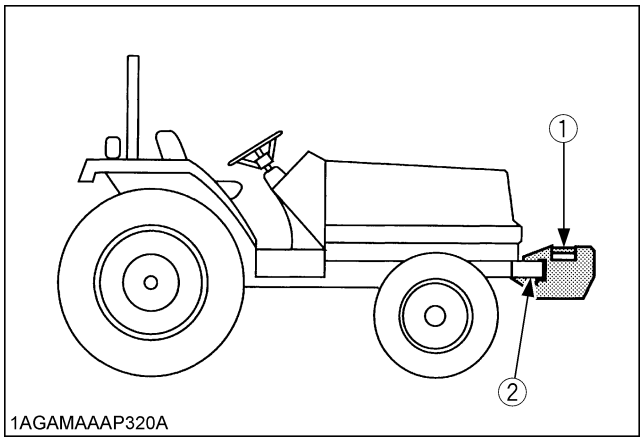

(1) Front end weights
(2) Front weight bracket (option)

IMPORTANT :
- Do not overload tires.
- Add no more weight than indicated in chart.

Maximum weight	25 kg x 3 pieces (165 lbs)

■Rear Ballast

Add weight to rear wheels if needed to improve traction or for stability. The amount of rear ballast should be matched to job and the ballast should be removed when it is not needed.
The weight should be added to the tractor in the form of liquid ballast.

◆ Liquid Ballast in Rear Tires

Water and calcium chloride solution provides safe economical ballast. Used properly, it will not damage tires, tubes or rims. The addition of calcium chloride is recommended to prevent the water from freezing. Use of this method of weighting the wheels has the full approval of the tire companies. See your tire dealer for this service.

Liquid weight per tire (75 Percent filled)

Tire sizes	8 - 16	9.5 - 16	11.2-16
Slush free at -10 ℃ (14 ℉) Solid at -30 ℃ (-22 ℉) [Approx. 1 kg(2 lbs.) $CaCl_2$ per 4L (1 gal.) of water]	35 kg (77 lbs.)	54 kg (119 lbs.)	70 kg (155 lbs.)
Slush free at -24 ℃ (-11 ℉) Solid at -47 ℃ (-52 ℉) [Approx. 1.5 kg(3.5 lbs.) $CaCl_2$ per 4L (1 gal.) of water]	37 kg (82 lbs.)	57 kg (126 lbs.)	74 kg (163 lbs.)
Slush free at -47 ℃ (-52 ℉) Solid at -52 ℃ (-62 ℉) [Approx. 2.25 kg(5 lbs.) $CaCl_2$ per 4L (1 gal.) of water]	39 kg (86 lbs.)	60 kg (132 lbs.)	78 kg (172 lbs.)

IMPORTANT :
- Do not fill tires with water or solution more than 75% of full capacity (to the level of valve stem at 12 o'clock position).

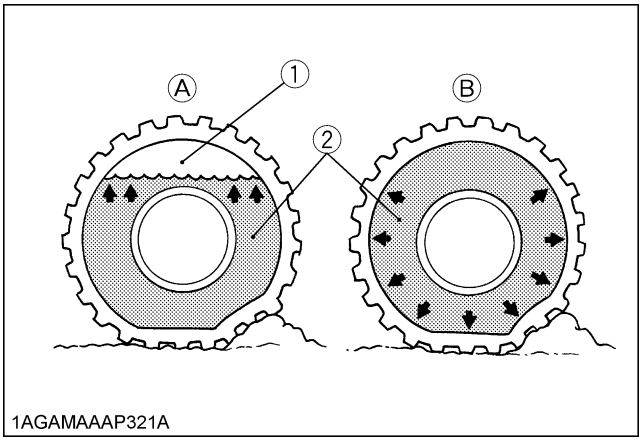

(1) Air
(2) Water
(A) Correct : 75% Full
Air compresses like a cushion
(B) Incorrect : 100% Full
Water can not be compressed

◆ Rear Wheel Weights (option): [B2320DTN, B2320HSDN]

Add weight to rear wheels if needed to improve traction or for stability. The amount of rear ballast should be matched to job and the ballast should be removed when it is not needed.
The weight should be added to the tractor in the form of liquid ballast, rear wheel weight, or a combination of both for B2320 narrow tractors only.
The rear wheel weights can be attached to the rear wheels for increased stability.

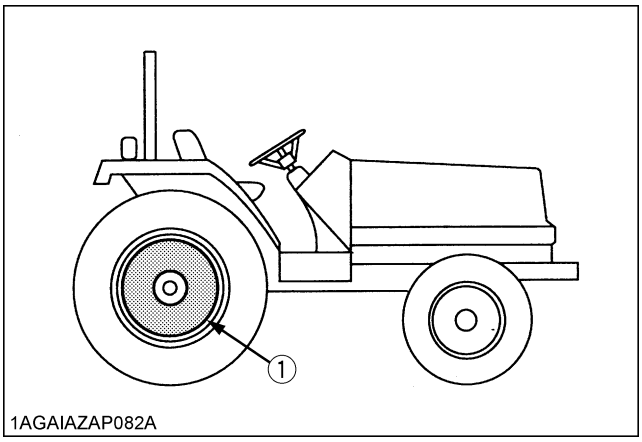

(1) Rear wheel weights

IMPORTANT :
- Do not overload tires.
- Add no more weight than indicated in chart.

Maximum weight per wheel	32 kg x 1 piece (71 lbs.)

https://truckmanualshub.com/

MAINTENANCE

SERVICE INTERVALS

No.	Items			Indication on hour meter														Since then	Ref. page		
				50	100	150	200	250	300	350	400	450	500	550	600	650	700				
1	Engine oil		Change	◎			○				○				○			every 200 Hr	63		
2	Engine oil filter		Replace	◎			○				○				○			every 200 Hr	62		
3	Transmission oil filter [HST]		Replace	◎			○				○				○			every 200 Hr	64		
4	Hydraulic oil filter		Replace								○							every 400 Hr	66		
5	Transmission fluid		Change								○							every 400 Hr	66		
6	Front axle case oil		Change								○							every 400 Hr	67		
7	Front axle pivot		Adjust								○							every 400 Hr	65		
8	Engine start system		Check	○	○	○	○	○	○	○	○	○	○	○	○	○	○	every 50 Hr	56		
9	Greasing		---	○	○	○	○	○	○	○	○	○	○	○	○	○	○	every 50 Hr	55		
10	Wheel bolt torque		Check	○	○	○	○	○	○	○	○	○	○	○	○	○	○	every 50 Hr	57		
11	Battery condition		Check		○		○		○		○		○		○		○	every 100 Hr	58	*5	
12	Air cleaner element	Primary element	Clean		○		○		○		○		○		○		○	every 100 Hr	59	*1	@
			Replace															every 1 year	67	*2	
		Secondary element	Replace															every 1 year	67		
13	Fuel filter element		Check		○		○		○		○		○		○		○	every 100 Hr	60		@
			Replace								○							every 400 Hr	67		
14	Fan belt		Adjust		○		○		○		○		○		○		○	every 100 Hr	60		
15	Clutch		Adjust	◎	○		○		○		○		○		○		○	every 100 Hr	61		
16	Brake		Adjust		○		○		○		○		○		○		○	every 100 Hr	61		
17	Radiator hose and clamp		Check				○				○				○			every 200 Hr	65		
			Replace															every 2 years	69		
18	Fuel line		Check		○		○		○		○		○		○		○	every 100 Hr	62		@
			Replace															every 2 years	69	*4	
19	Intake air line		Check				○				○				○			every 200 Hr	65	*4	@
			Replace															every 2 years	69		
20	Engine valve clearance		Adjust															every 800 Hr	67	*4	
21	Fuel injection nozzle Injection pressure		Check															every 1500 Hr	67	*4	@
22	Injection pump		Check															every 3000 Hr	67	*4	@
23	Cooling system		Flush															every 2 years	68		
24	Coolant		Change															every 2 years	68		
25	Fuel system		Bleed															Service as required	69		
26	Clutch housing water		Drain																69		
27	Fuse		Replace																70		
28	Light bulb		Replace																70		

https://truckmanualshub.com/

IMPORTANT :

- The jobs indicated by ◎ must be done after the first 50 hours of operation.

*1 Air cleaner should be cleaned more often in server dusty conditions.

*2 Every year or after 6 cleanings.

*3 Replace only if necessary.

*4 Consult your local KUBOTA Dealer for this service.

*5 When the battery is used for less than 100 hours per year, check the fluid level annually.

- The items listed above (@ marked) are registered as emission related critical parts by KUBOTA in the U.S.EPA nonroad emission regulation. As the engine owner, you are responsible for the performance of the required maintenance on the engine according to the above instruction.
  Please see the Warranty Statement in detail.

LUBRICANTS, FUEL AND COOLANT

No.	Locations	Capacities						Lubricants	
		B2320DTN	B2320DT	B2320HSDN	B2320HSD	B2620HSD	B2920HSD		
1	Fuel	26 L (6.9 U.S.gals.)						No. 2-D diesel fuel No. 1-D diesel fuel if temperature is below -10 ℃(14 ℉)	
2	Coolant (with recovery tank)	3.9 L (4.1 U.S.qts.)						Fresh clean soft water with anti-freeze	
3	Engine crankcase (with filter)	3.1 L (3.3 U.S.qts.)					3.5 L (3.7 U.S.qts.)	● Engine oil : Refer to next page	
								Above 25℃(77℉)	SAE30, SAE10W-30 or 15W-40
								-10 to 25℃ (14 to 77℉)	SAE20, SAE10W-30 or 15W-40
								Below -10℃ (14℉)	SAE10W-30
4	Transmission case	14 L (3.7 U.S.gals.)		15 L (4.0 U.S.gals.)				● KUBOTA SUPER UDT-2 fluid	
5	Front axle case	3.0 L (3.2 U.S.qts.)	3.2 L (3.4 U.S.qts.)					● KUBOTA SUPER UDT-2 fluid or SAE 80 - SAE90 gear oil	
6	Greasing	No. of greasing points						Capacity	Type of grease
	Speed control pedal	-		1				Until grease overflow.	Multipurpose Grease NLGI-2 OR NLGI-1 (GC-LB)
	Clutch pedal	1							
	Brake pedal	1							
	Top link	1							
	Lifting rod (RH)	1							
	Battery terminal	2						Moderate amount	

NOTE :

The product name of KUBOTA genuine UDT fluid may be different from that in the Operator's Manual depending on countries or territories. Consult your local KUBOTA Dealer for further details.

https://truckmanualshub.com/

For North American market

NOTE :

◆ **Engine Oil:**

- Oil used in the engine should have an American Petroleum Institute (API) service classification and Proper SAE Engine Oil according to the ambient temperatures as shown above:

- Refer to the following table for the suitable API classification engine oil according to the engine type (with internal EGR, external EGR or non-EGR) and the fuel.

Fuel used	Engine oil classification (API classification)	
	Oil class of engines except external EGR	Oil class of engines with external EGR
Ultra Low Sulfur Fuel [<0.0015% (15 ppm)]	**CF, CF-4, CG-4, CH-4** or **CI-4**	**CF** or **CI-4** (Class CF-4, CG-4 and CH-4 engine oils cannot be used on EGR type engines)

EGR: Exhaust Gas Re-circulation

- The CJ-4 engine oil is intended for DPF (Diesel Particulate Filter) type engines, and cannot be used on this tractor.

	except external EGR	with external EGR
Models	B2320 / B2620 / B2920	---

◆ **Fuel:**

- Cetane number of 45 is minimum. Cetane number greater than 50 is preferred, especially for temperatures below -20℃ (-4℉) or elevations above 1500 m (5000 ft).
- Diesel fuels specified to EN 590 or ASTM D975 are recommended.
- No.2-D is a distillate fuel of lower volatility for engines in industrial and heavy mobile service. (SAE J313 JUN87)

◆ **Transmission Oil:**

*KUBOTA Super UDT-2: For an enhanced ownership experience, we highly recommend Super UDT-2 to be used instead of standard hydraulic/transmission fluid.
Super UDT-2 is a proprietary KUBOTA formulation that deliveries superior performance and protection in all operating conditions.
Regular UDT is also permitted for use in this machine.

- Indicated capacities of water and oil are manufacturer's estimate.

https://truckmanualshub.com/

For other than North American market

NOTE :

◆ **Engine Oil:**

- Oil used in the engine should have an American Petroleum Institute (API) service classification and Proper SAE Engine Oil according to the ambient temperatures as shown above:
- With the emission control now in effect, the CF-4 and CG-4 lubricating oils have been developed for use of a low-sulfur fuel on on-road vehicle engines. When an off-road vehicle engine runs on a high-sulfur fuel, it is advisable to employ the "CF or better" lubricating oil with a high Total Base Number (TBN of 10 minimum).

- Refer to the following table for the suitable API classification engine oil according to the engine type (with internal EGR, external EGR or non-EGR) and the fuel (low-sulfur or high-sulfur fuel).

Fuel used	Engine oil classification (API classification)	
	Oil class of engines except external EGR	Oil class of engines with external EGR
High Sulfur Fuel [≧ 0.05% (500 ppm)]	**CF** (If the "CF-4, CG-4, CH-4 or CI-4" lubricating oil is used with a high-sulfur fuel, change the lubricating oil at shorter intervals. (approximately half))	---
Low Sulfur Fuel [<0.05% (500 ppm)] or Ultra Low Sulfur Fuel [<0.0015% (15 ppm)]	**CF, CF-4, CG-4, CH-4** or **CI-4**	**CF** or **CI-4** (Class CF-4, CG-4 and CH-4 engine oils cannot be used on EGR type engines)

EGR: Exhaust Gas Re-circulation

- The CJ-4 engine oil is intended for DPF (Diesel Particulate Filter) type engines, and cannot be used on this tractor.

	except external EGR	with external EGR
Models	B2320 / B2620 / B2920	---

◆ **Fuel:**

- Cetane number of 45 is minimum. Cetane number greater than 50 is preferred, especially for temperatures below -20℃ or elevations above 1500 m.
- If diesel fuel with sulfur content greater than 0.5% (5000 ppm) sulfur content is used, reduce the service interval for engine oil and filter by 50%.
- NEVER use diesel fuel with sulfur content greater than 0.05% (500 ppm) for EXTERNAL EGR type engine.
- DO NOT use diesel fuel with sulfur content greater than 1.0% (10000 ppm).
- Diesel fuels specified to EN 590 or ASTM D975 are recommended.
- No.2-D is a distillate fuel of lower volatility for engines in industrial and heavy mobile service. (SAE J313 JUN87)

◆ **Transmission Oil:**

The oil used to lubricate the transmission is also used as hydraulic fluid. To insure proper operation of the hydraulic system and to complete lubrication of the transmission, it is important that a multi-grade transmission fluid is used in this system. We recommend the use of **KUBOTA UDT or SUPER UDT fluid** for optimum protection and performance. (Consult your local KUBOTA Dealer for further detail.)
Do not mix different brands together.

- Indicated capacities of water and oil are manufacturer's estimate.

https://truckmanualshub.com/

PERIODIC SERVICE

CAUTION

To avoid personal injury:

- **Do not work under any hydraulically supported devices. They can settle, suddenly leak down, or be accidentally lowered. If necessary to work under tractor or any machine elements for servicing or adjustment, securely support them with stands or suitable blocking beforehand.**

HOW TO OPEN THE HOOD

CAUTION

To avoid personal injury from contact with moving parts;

- **Never open the hood or engine side cover while the engine is running.**
- **Do not touch muffler or exhaust pipes while they are hot; Severe burns could result.**
- **Support hood with other hand while unlocking support rod.**

■Hood

To open the hood, twist the mascot to release the latch and open the hood.

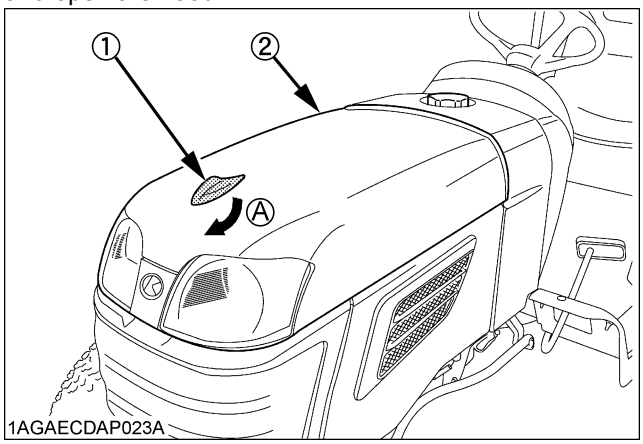

(1) Mascot *(A) "OPEN"*
(2) Hood

NOTE :

- To close the hood, hold the hood and release the support rod.

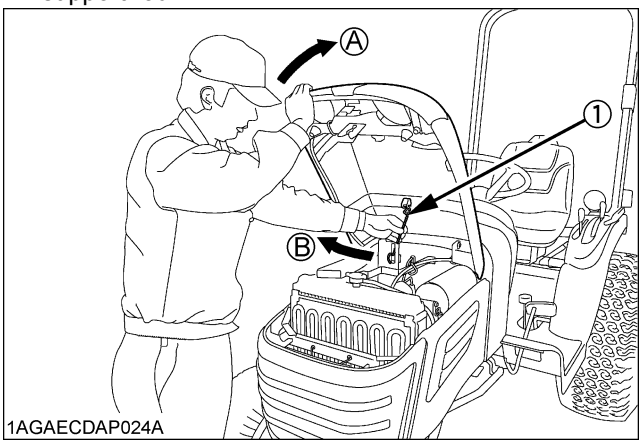

(1) Support rod *(A) "HOLD"*
(B) "PULL"

■Front Grille

To remove the front grill, loosen knob bolts, pull outward as indicated by arrows, and then lift the front grill off.

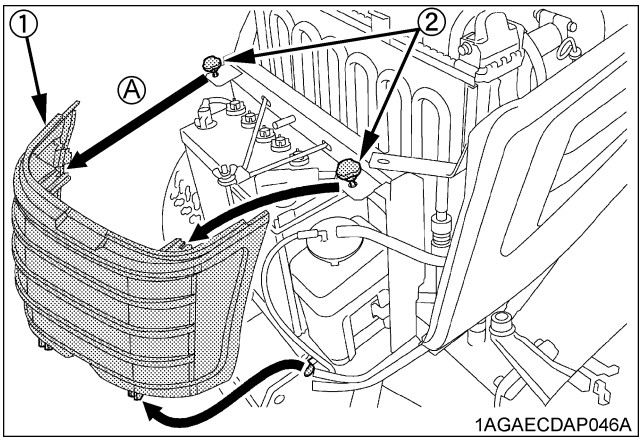

(1) Front grill *(A) "PULL"*
(2) Knob bolt

https://truckmanualshub.com/

■Engine Side Cover

1. Tilt down the front grille forward.
2. Lift up the front of the engine side cover and free the upper and lower projections.

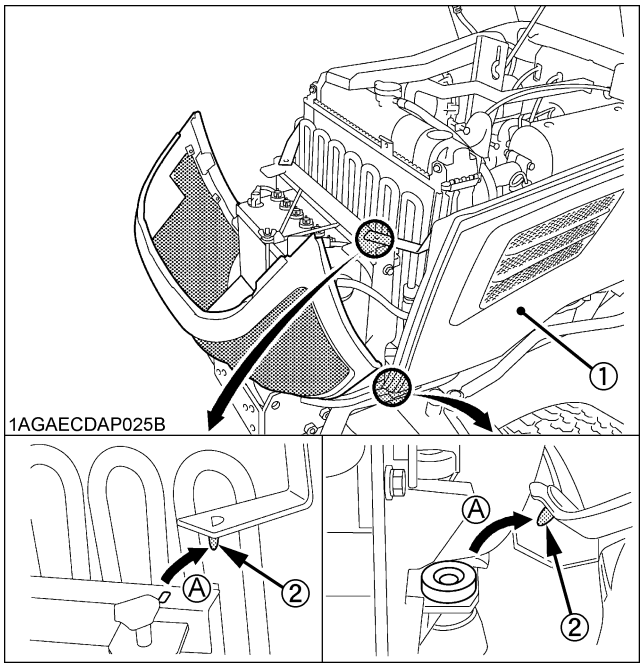

(1) Engine side cover *(A) "LIFT UP TO REMOVE"*
(2) Projection

3. Pull the engine side cover forward and free the rear notches. Now the side cover can be detached.

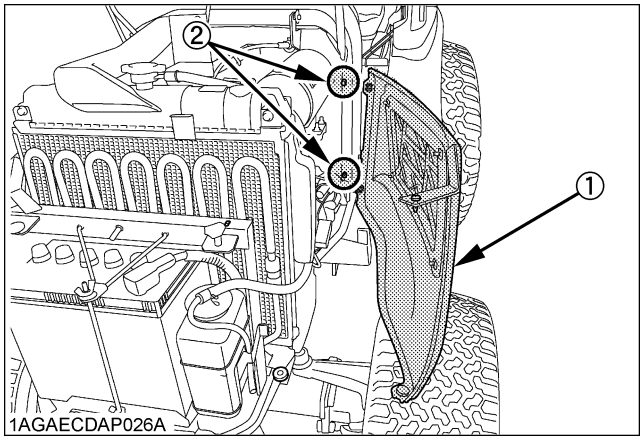

(1) Engine side cover
(2) Notch

DAILY CHECK

For your own safety and maximum service life of the machine, make a thorough daily inspection before operating the machine to start the engine.

CAUTION

To avoid personal injury:

- **Be sure to check and service the tractor on a level surface with the engine shut off and the parking brake "ON" and implement lowered to the ground.**

■Walk Around Inspection

Look around and under the tractor for such items as loose bolts, trash build-up, oil or coolant leaks, broken or worn parts.

https://truckmanualshub.com/

■Checking and Refueling

CAUTION

To avoid personal injury:
- **Do not smoke while refueling.**
- **Be sure to stop the engine before refueling.**

1. Turn the key switch to "ON", check the amount of fuel by fuel gauge.
2. Fill fuel tank when fuel gauge shows 1/4 or less fuel in tank.

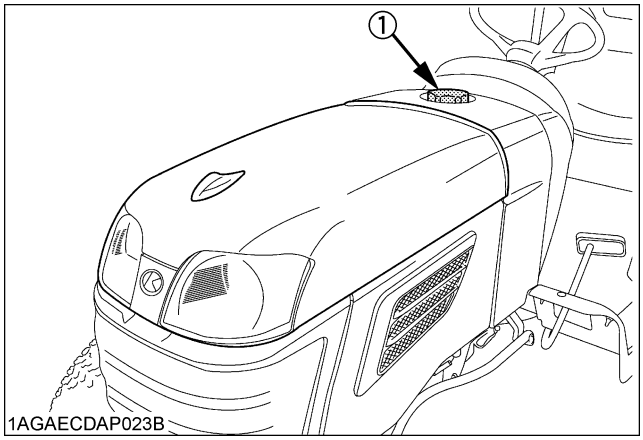

(1) Fuel tank cap

Fuel tank capacity	26 L (6.9 U.S.gals.)

IMPORTANT :
- Do not permit dirt or trash to get into the fuel system.
- Be careful not to let the fuel tank become empty, otherwise air will enter the fuel system, necessitating bleeding before next engine start.
- Be careful not to spill during refueling. If should spill, wipe it off at once, or it may cause a fire.
- To prevent condensation (water) accumulation in the fuel tank, fill the tank before parking overnight.

■Checking Engine Oil Level

CAUTION

To avoid personal injury:
- **Be sure to stop the engine before checking the oil level.**

1. Park the machine on a flat surface.
2. Check engine oil before starting the engine or 5 minutes or more after the engine has stopped.
3. To check the oil level, draw out the dipstick, wipe it clean, replace it, and draw it out again. Check to see that the oil level lies between the two notches.
   If the level is too low, add new oil to the prescribed level at the oil inlet.
   (See "LUBRICANTS" in "MAINTENANCE" section.)

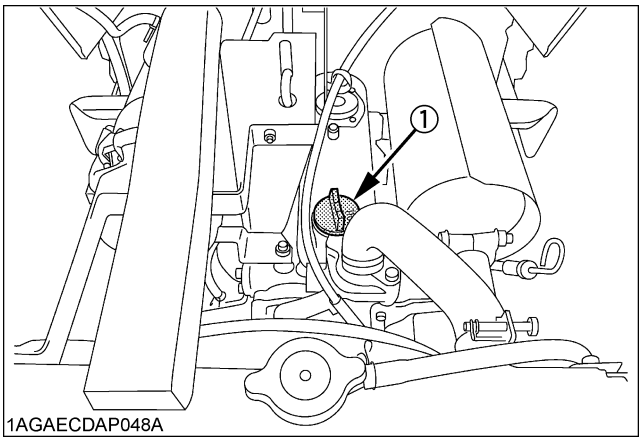

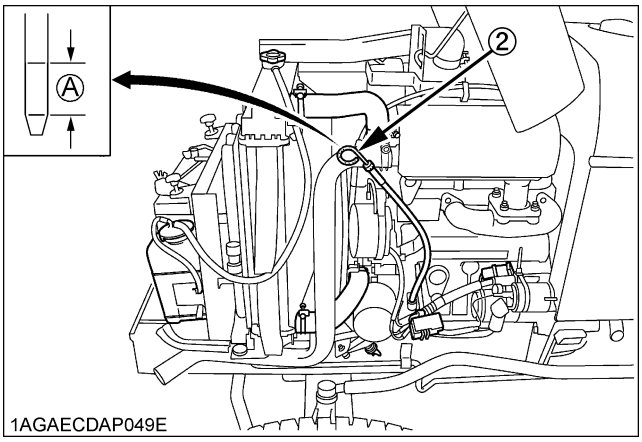

(1) Oil inlet *(A) Oil level is acceptable within this range.*
(2) Dipstick

IMPORTANT :
- When using an oil of different maker or viscosity from the previous one, remove all of the old oil and oil filter. Never mix two different types of oil.
- If oil level is low, do not run engine.

https://truckmanualshub.com/

■Checking Transmission Fluid Level

1. Park the machine on a flat surface, lower the implement and shut off engine.
2. To check the oil level, draw out the dipstick, wipe it clean, replace it, and draw it out again. Check to see that the oil level lies between the two notches.
   If the level is too low, add new oil to the prescribed level at the oil inlet.
   (See "LUBRICANTS" in "MAINTENANCE" section.)

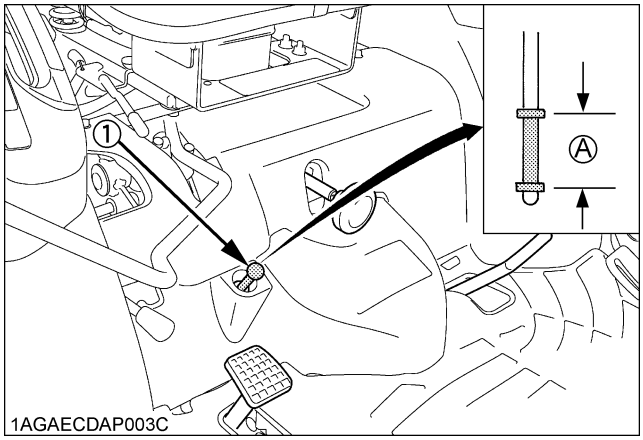

(1) Dipstick *(A) Oil level is acceptable within this range.*

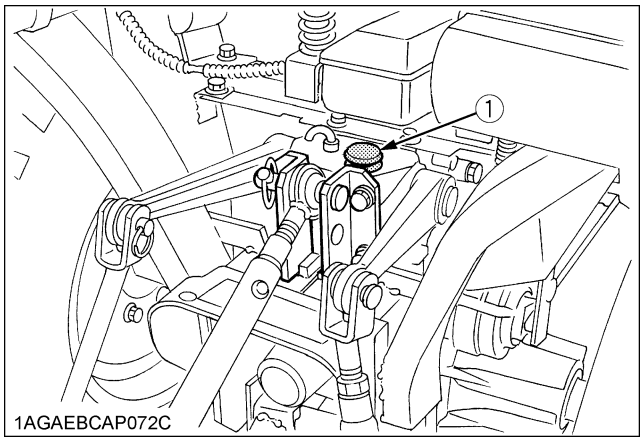

(1) Oil inlet

IMPORTANT :
- If oil level is low, do not run engine.

■Checking Coolant Level

CAUTION

To avoid personal injury:
- **Do not remove radiator cap while coolant is hot. When cool, slowly rotate cap to the first stop and allow sufficient time for excess pressure to escape before removing the cap completely.**

1. Check to see that the coolant level is between the "FULL" and "LOW" marks of recovery tank.
2. When the coolant level drops due to evaporation, add soft water only up to the full level.
   In case of leakage, add anti-freeze and soft water in the specified mixing ratio up to the full level.
   (See "Flushing Cooling System and Changing Coolant" in "EVERY 2 YEARS" in "PERIODIC SERVICE" section.)

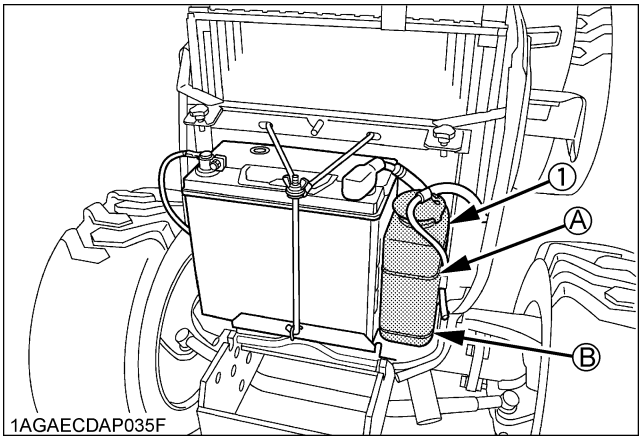

(1) Recovery tank *(A) "FULL"*
(B) "LOW"

IMPORTANT :
- If the radiator cap has to be removed, follow the caution above and securely retighten the cap.
- Use clean, fresh soft water and anti-freeze to fill the recovery tank.
- If coolant should leak, consult your local KUBOTA Dealer.

https://truckmanualshub.com/

■Cleaning Grill and Radiator Screen

CAUTION

To avoid personal injury:

- **Be sure to stop the engine and remove the key before removing the screen.**

1. Check front grill and side screens to be sure they are clean of debris.
2. Detach the screen and remove all foreign materials and clean the front of radiator completely.

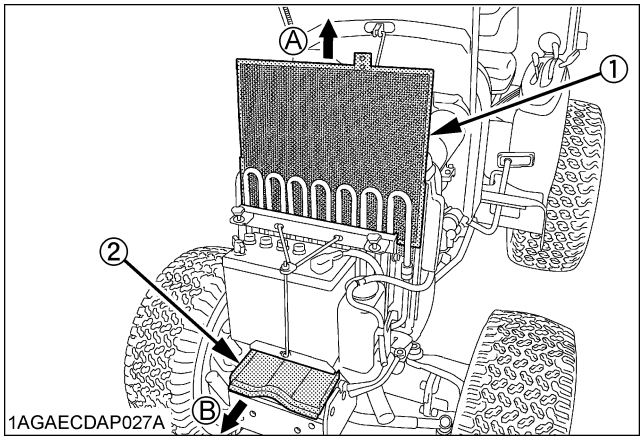

(1) Radiator screen *(A) "DETACH"*
(2) Shutter plate *(B) "PULL"*

IMPORTANT :

- Grill and screen must be clean from debris to prevent engine from overheating and to allow good air intake for the air cleaner.

NOTE :

- If the dust or chaff has accumulated between the battery and radiator, open the shutter plate and clean the front of radiator completely.

■Checking Brake Pedals and Clutch Pedal

1. Inspect the brake and clutch pedals for free travel, and smooth operation.
2. Adjust if incorrect measurement is found:
   (See "Adjusting Clutch Pedal" and "Adjusting Brake Pedal" in "EVERY 100 HOURS" in "PERIODIC SERVICE" section.)

NOTE :

- Brake pedals should be equal when depressed.

■Checking Gauges, Meter and Easy Checker(TM)

1. Inspect the instrument panel for broken gauge(s), meter(s) and Easy Checker(TM).
2. Replace if broken.

■Checking Head Light, Hazard Light etc.

1. Inspect the lights for broken bulbs and lenses.
2. Replace if broken.

■Checking Seat Belt and ROPS

1. Always check condition of seat belt and ROPS attaching hardware before operating tractor.
2. Replace if damaged.

https://truckmanualshub.com/

■Checking and Cleaning of Electrical Wiring and Battery Cables

CAUTION

To avoid personal injury:

- **A loosened terminal or connector, or damaged wire may affect the performance of electrical components or cause short circuits. Leakage of electricity could result in a fire hazard, a dead battery or damage to electrical components.**
- **Replace damaged wires or connections promptly.**
- **If a fuse blows soon after replacement, DO NOT USE A LARGER THAN RECOMMENDED FUSE OR BYPASS THE FUSE SYSTEM.**
- **Many wiring connections are protected by waterproof plugs, plug and unplug these connections carefully and make sure they are sealed correctly after assembly.**
- **Accumulation of dust, chaff and spilled fuel deposits around the battery, electrical wiring, engine or exhaust system are fire hazards. CLEAN THESE AREAS BEFORE STARTING WORK.**
  To avoid premature electrical malfunctions DO NOT APPLY high pressure water directly to battery, wiring, connectors, electrical components or instrument panel.

Inspect the following regularly:

1. Check wiring for chafed or cracked insulation.
2. Check wiring harness clamps. Replace if necessary.
3. Check connectors and terminals for looseness, contamination or overheated (discolored) connections.
4. Check instrument panel for correct operation of switches and gauges.

Consult your KUBOTA Dealer regarding maintenance, diagnosis and repair.

■Checking Movable Parts

If any of the movable parts, such as levers and pedals, is not smoothly moved because of rust or anything sticky, do not attempt to force it into motion.
In the above case, remove the rust or the sticky thing, and apply oil or grease on the relevant spot.
Otherwise, the machine may get damaged.

EVERY 50 HOURS

■Lubricating Grease Fittings

Apply a small amount of multipurpose grease to the following points every 50 hours:
If you operated the machine in extremely wet and muddy conditions, lubricate grease fittings more often.

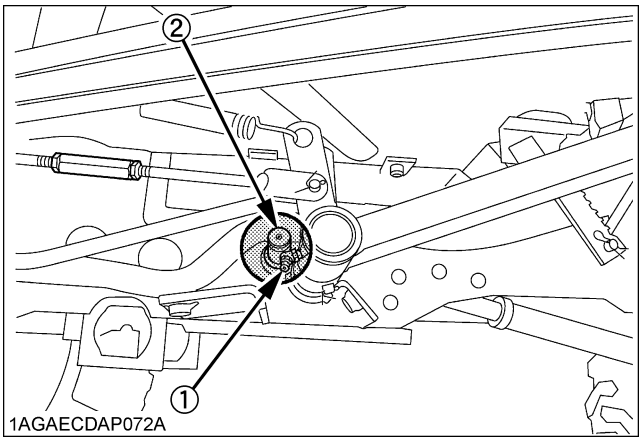

(1) Grease fitting
(2) Grease fitting (HST type)

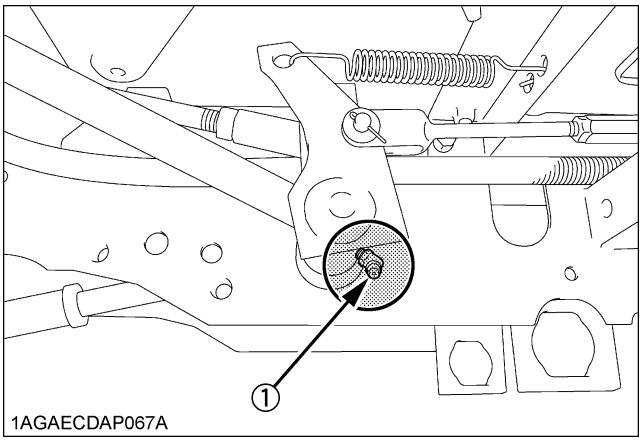

(1) Grease fitting

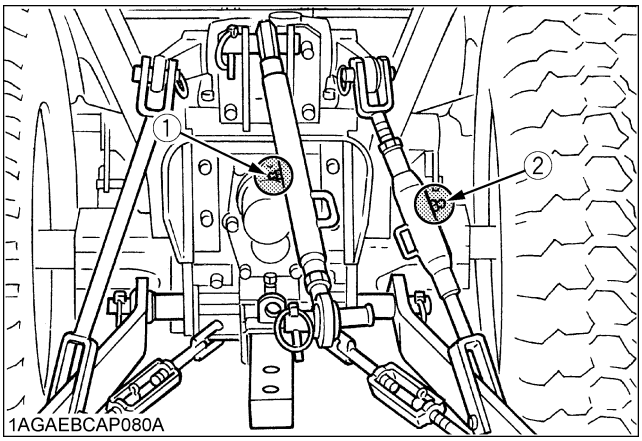

(1) Grease fitting (Top link)
(2) Grease fitting (Lifting rod, right)

https://truckmanualshub.com/

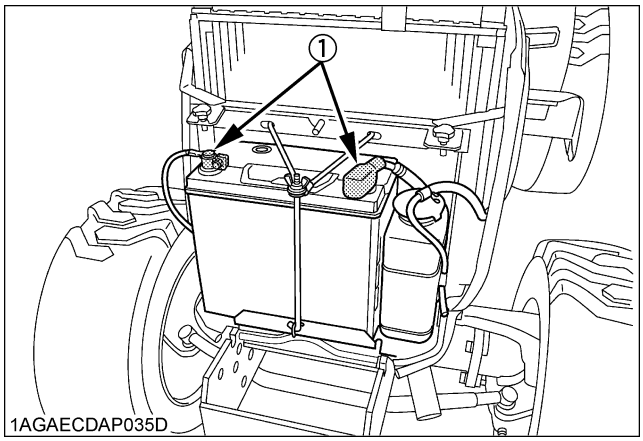

(1) Battery terminals

■Checking Engine Start System

CAUTION

To avoid personal injury:

- **Do not allow anyone near the tractor while testing.**
- **If the tractor does not pass the test, do not operate the tractor.**

[Manual Transmission Type]

◆ **Preparation before testing.**

1. Sit on operator's seat.
2. Set the parking brake and stop the engine.
3. Shift the main gear shift lever in "NEUTRAL" position.
4. Shift the PTO gear shift lever to "NEUTRAL" position.
5. Fully depress the clutch pedal.

◆ **Test : Switch for the main gear shift lever.**

1. Fully depress the clutch pedal.
2. Shift the main gear shift lever to "Desired" position.
3. Turn the key to "START" position.
4. The engine must not crank.

◆ **Test : Switch for the PTO gear shift lever.**

1. Fully depress the clutch pedal.
2. Shift the main gear shift lever to "NEUTRAL" position.
3. Shift the PTO gear shift lever to "ON" (Engaged) position.
4. Turn the key to "START" position.
5. The engine must not crank.

◆ **Test : Switch for the Operator's seat.**

1. Sit on operator's seat.
2. Start the engine.
3. Fully depress the clutch pedal.
4. Shift the PTO gear shift lever to "ON" (Engaged) position.
5. Stand up. (Do not get off the machine.)
6. The engine must shut off after approximately 1 second.
7. If it does not stop, consult your local KUBOTA Dealer for this service.

NOTE :

- If the engine cranks during any of these tests, consult your local KUBOTA Dealer to have unit checked before operating.

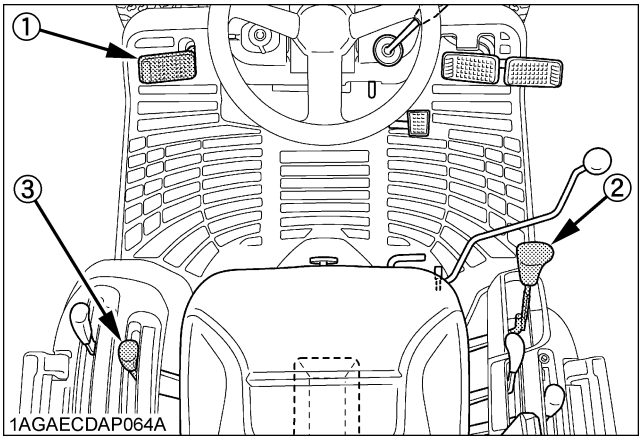

(1) Clutch pedal
(2) Main gear shift lever
(3) PTO gear shift lever

https://truckmanualshub.com/

[HST Type]

◆ **Preparation before testing.**
1. Sit on operator's seat.
2. Set the parking brake and stop the engine.
3. Shift the range gear shift lever to "NEUTRAL" position. Place the speed control pedal in "NEUTRAL" position.
4. Shift the PTO gear shift lever to "NEUTRAL" position.
5. Fully depress the clutch pedal.

◆ **Test : Switch for the speed control pedal.**
1. Fully depress the clutch pedal.
2. Depress the speed control pedal.
3. Turn the key to "START" position.
4. The engine must not crank.

◆ **Test : Switch for the PTO gear shift lever.**
1. Fully depress the clutch pedal.
2. Place the speed control pedal in "NEUTRAL" position.
3. Shift the PTO gear shift lever to "ON" (Engaged) position.
4. Turn the key to "START" position.
5. The engine must not crank.

◆ **Test : Switch for the Operator's seat.**
1. Sit on operator's seat.
2. Start the engine.
3. Fully depress the clutch pedal.
4. Shift the PTO gear shift lever to "ON" (Engaged) position.
5. Stand up. (Do not get off the machine.)
6. The engine must shut off after approximately 1 second.
7. If it does not stop, consult your local KUBOTA Dealer for this service.

NOTE :
- If the engine cranks during any of these tests, consult your local KUBOTA Dealer to have unit checked before operating.

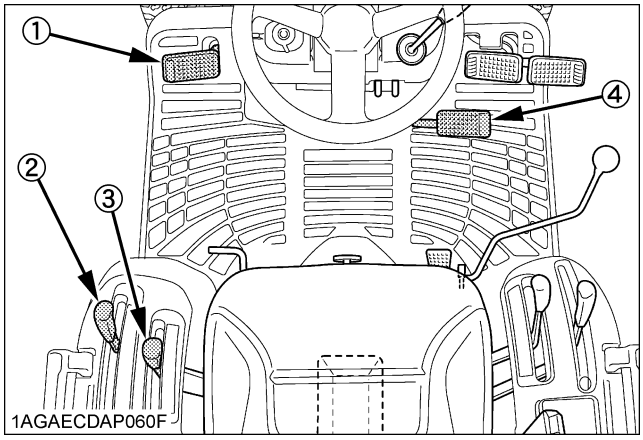

(1) Clutch pedal
(2) Range gear shift lever (L-M-H)
(3) PTO gear shift lever
(4) Speed control pedal

■Checking Wheel Bolt Torque

CAUTION

To avoid personal injury:
- **Never operate tractor with a loose rim, wheel, or axle.**
- **Any time bolts and nuts are loosened, retighten to specified torque.**
- **Check all bolts and nuts frequently and keep them tight.**

Check wheel bolts and nuts regularly especially when new. If they are loose, tighten them as follows.

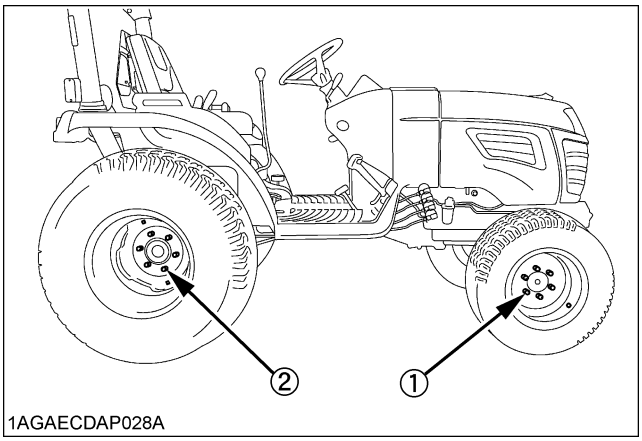

(1) 79 to 92 N-m (8.1 to 9.4 kgf-m, 58.3 to 67.9 ft-lbs.)
(2) 145 to 150 N-m (14.8 to 15.3 kgf-m, 107.0 to 110.6 ft-lbs.)

[B2320DTN, B2320HSDN]

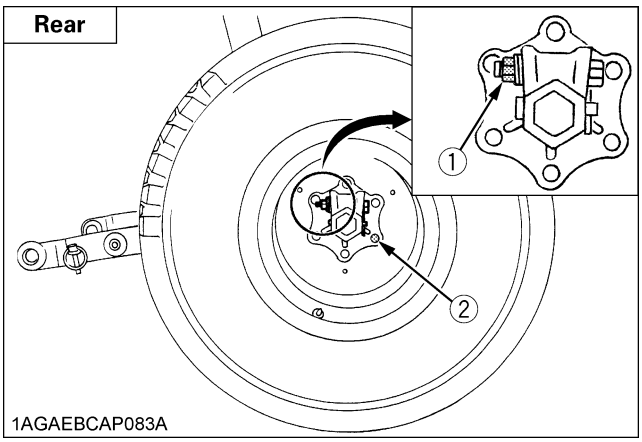

(1) 123 to 147 N-m (12.6 to 15.0 kgf-m, 91 to 108 ft-lbs)
(2) 108 to 125 N-m (11.0 to 12.8 kgf-m, 80 to 93 ft-lbs)

https://truckmanualshub.com/

EVERY 100 HOURS

■Battery

DANGER

To avoid the possibility of battery explosion:
For the refillable type battery, follow the instructions below.

- **Do not use or charge the refillable type battery if the fluid level is below the LOWER (lower limit level) mark. Otherwise, the battery component parts may prematurely deteriorate, which may shorten the battery's service life or cause an explosion. Check the fluid level regularly and add distilled water as required so that the fluid level is between the UPPER and LOWER levels.**

CAUTION

To avoid personal injury:

- **Never remove the vent caps while the engine is running.**
- **Keep electrolyte away from eyes, hands and clothes. If you are spattered with it, wash it away completely with water immediately and get medical attention.**
- **Wear eye protection and rubber gloves when working around the battery.**

The factory-installed battery is of non-refillable type. If the indicator turns white, do not charge the battery but replace it with new one.

Mishandling the battery shortens the service life and adds to maintenance costs.
The original battery is maintenance free, but needs some servicing.
If the battery is weak, the engine will be difficult to start and the lights will be dim. It is important to check the battery periodically.

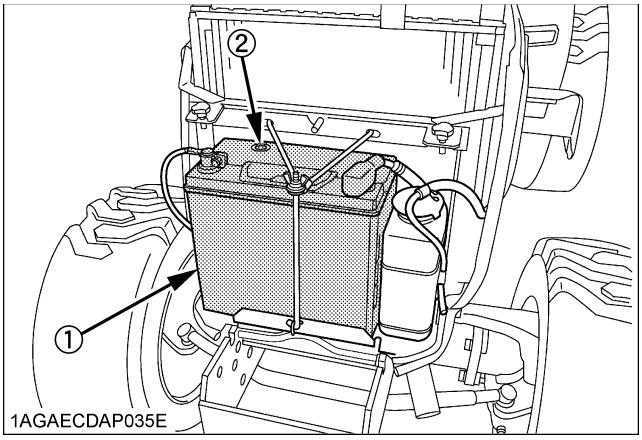

(1) Battery
(2) Indicator

◆ **How to read the indicator**

Check the battery condition by reading the indicator.

State of indicator display	
Green	Specific gravity of electrolyte and quality of electrolyte are both in good condition.
Black	Needs charging battery.
White	Needs replacing battery.

◆ **Battery Charging**

CAUTION

To avoid personal injury:

- **When the battery is being activated, hydrogen and oxygen gases in the battery are extremely explosive. Keep open sparks and flames away from the battery at all times, especially when charging the battery.**
- **When charging the battery, ensure the vent caps are securely in place. (if equipped)**
- **When disconnecting the cable from the battery, start with the negative terminal first.**
  When connecting the cable to the battery, start with the positive terminal first.
- **Never check battery charge by placing a metal object across the posts.**
  Use a voltmeter or hydrometer.

https://truckmanualshub.com/

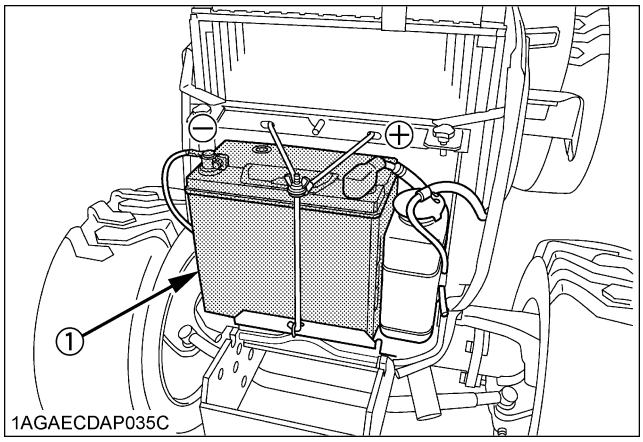

(1) Battery

1. To slow charge the battery, connect the battery positive terminal to the charger positive terminal and the negative to the negative, then recharge in the standard fashion.
2. A boost charge is only for emergencies. It will partially charge the battery at a high rate and in a short time.
   When using a boost-charged battery, it is necessary to recharge the battery as early as possible.
   Failure to do this will shorten the battery's service life.
3. The battery is charged if the indicator display turns green from black.
4. When exchanging an old battery for a new one, use battery of equal specification shown in **table 1**.

[TABLE 1]

Battery Type	Volts (V)	Capacity at 5H.R	Reserve at (min)	Cold Cranking Amps	Normal Charging Rate(A)
55B24L (S)-MF	12	36	80	430	4.5

◆ Battery Storage

1. When storing the tractor for long periods of time, remove the battery from tractor, adjust the electrolyte to the proper level and store in a dry place out of direct sunlight.
2. The battery self-discharges while it is stored.
   Recharge it once every three months in hot seasons and once every six months in cold seasons.

■Cleaning Air Cleaner Primary Element

1. Remove the air cleaner cover and primary element.
2. Clean the primary element:
   (1) When dry dust adheres to the element, blow compressed air from the inside, turning the element. Pressure of compressed air must be under 205 kPa (2.1 kgf/cm^2, 30 psi).
   (2) When carbon or oil adheres to the element, soak the element in detergent for 15 minutes then wash it several times in water, rinse with clean water and dry it naturally. After element is fully dried, inspect inside of the element with a light and check if it is damaged or not.
3. Replace air cleaner primary element:
   Once yearly or after every sixth cleaning, whichever comes first.

NOTE :
- Check to see if the evacuator valve is blocked with dust.

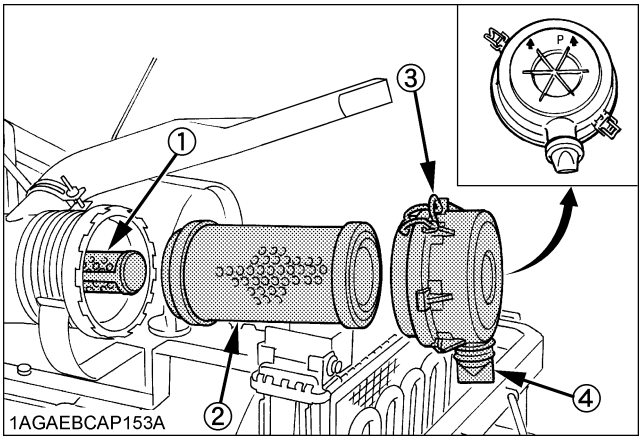

(1) Secondary (safety) element
(2) Primary element
(3) Cover
(4) Evacuator valve

IMPORTANT :
- The air cleaner uses a dry element, never apply oil.
- Do not run the engine with filter element removed.
- Be sure to refit the cover with the arrow ⬆ (on the rear of cover) upright. If the cover is improperly fitted, evacuator valve will not function and dust will adhere to the element.
- Do not touch the secondary element except in cases where replacing is required.
  (See "Replacing Air Cleaner Secondary Element" in "EVERY 1 YEAR" in "PERIODIC SERVICE" section.)

◆ Evacuator Valve

Open the evacuator valve once a week under ordinary conditions - or daily when used in a dusty place - to get rid of large particles of dust and dirt.

https://truckmanualshub.com/

■Cleaning Fuel Filter

This job should not be done in the field, but in a clean place.

1. Loosen and remove the filter bowl, and rinse the inside with kerosene.
2. Take out the element and dip it in the kerosene to rinse.
3. After cleaning, reassemble the fuel filter, keeping out dust and dirt.
4. Bleed the fuel system.
   (See "SERVICE AS REQUIRED" in "PERIODIC SERVICE" section.)

IMPORTANT :

- When the fuel filter bowl has been removed, fuel stops flowing from the fuel tank. If the fuel tank is almost full, however, the fuel will flow back from the fuel return pipe to the fuel filter. Before checking, make sure the fuel tank is less than half-full.

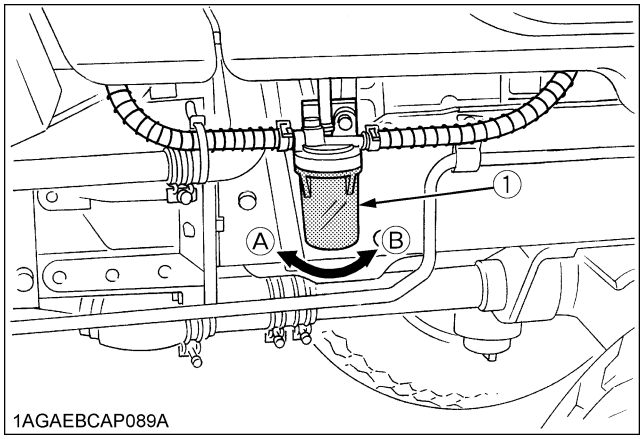

(1) Fuel filter bowl
(A) "LOOSEN"
(B) "TIGHTEN"

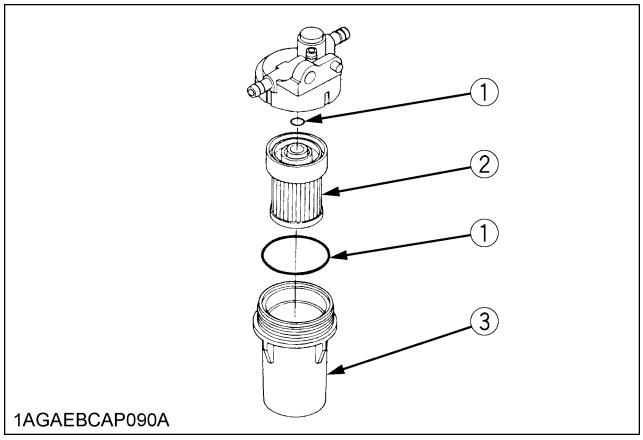

(1) O ring
(2) Filter element
(3) Filter bowl

IMPORTANT :

- If dust, dirt or water enters the fuel system, the fuel pump and injection nozzles are subject to premature wear. To prevent this, be sure to clean the fuel filter bowl and element periodically.

■Adjusting Fan Belt Tension

Proper fan belt tension	A deflection of between 7 to 9 mm (0.28 to 0.35 in.) when the belt is pressed in the middle of the span.

1. Stop the engine and remove the key.
2. Apply moderate thumb pressure to belt between pulleys.
3. If tension is incorrect, loosen the alternator mounting bolts and, using a lever placed between the alternator and the engine block, pull the alternator out until the deflection of the belt falls within acceptable limits.
4. Replace fan belt if it is damaged.

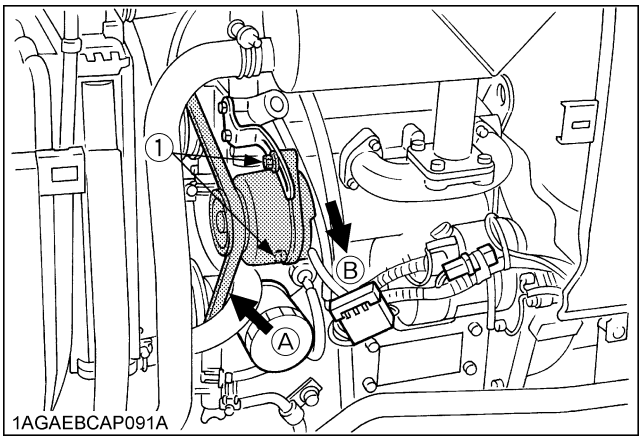

(1) Bolt
(A) Check the belt tension
(B) To tighten

https://truckmanualshub.com/

■Adjusting Clutch Pedal

Proper clutch pedal free travel	20 to 30 mm (0.8 to 1.2 in.) on the pedal

1. Stop the engine and remove the key.
2. Slightly depress the clutch pedal and measure free travel at top of pedal stroke.
3. If adjustment is needed, loosen the lock nut and turn the turnbuckle to adjust the rod length within acceptable limits.
4. Retighten the lock nut.

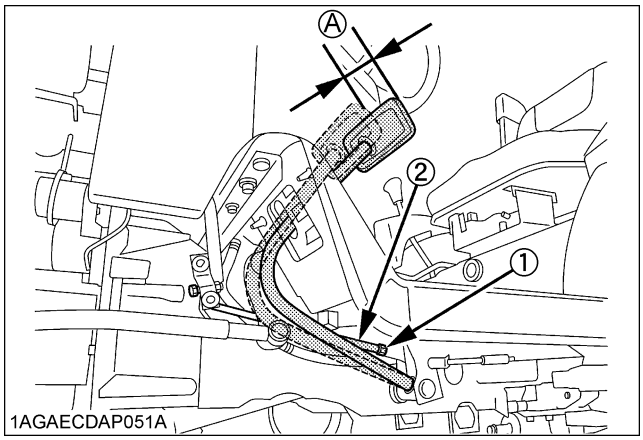

(1) Lock nut
(2) Turnbuckle
(A) "FREE TRAVEL"

■Adjusting Brake Pedal

CAUTION

To avoid personal injury:

- **Stop the engine and chock the wheels before checking brake pedal.**

Proper brake pedal free travel	30 to 40 mm (1-3/16 to 1-19/32 in.) on the pedal
	Keep the free travel in the right and left brake pedals equal.

1. Release the parking brake.
2. Slightly depress the brake pedals and measure free travel at the top of pedal stroke.
3. If adjustment is needed, loosen the lock nut and turn the turnbuckle to adjust the rod length within acceptable limits.
4. Retighten the lock nut.

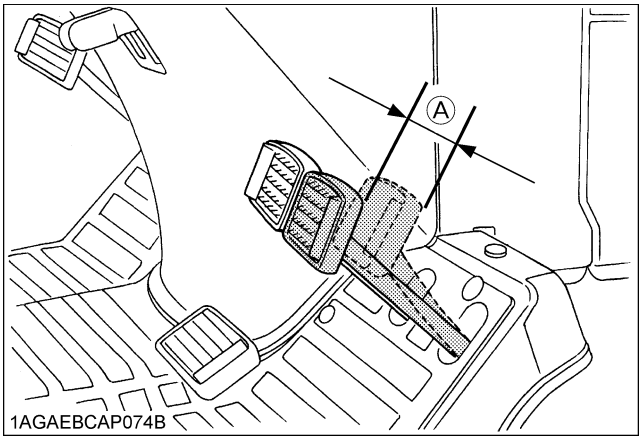

(A) "FREE TRAVEL"

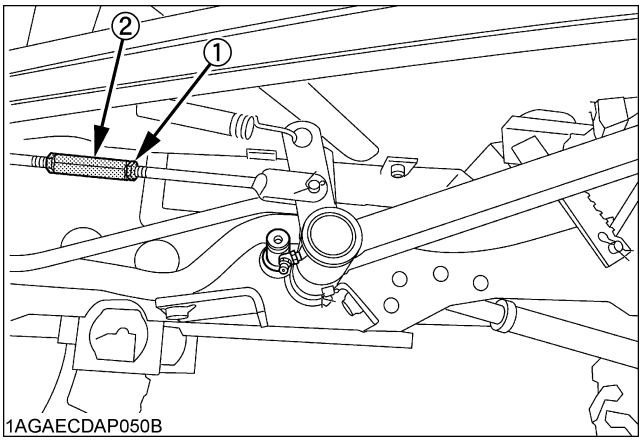

(1) Lock nut
(2) Turnbuckle

https://truckmanualshub.com/

■Checking Fuel Line

1. Check to see that all lines and hose clamps are tight and not damaged.
2. If hoses and clamps are found worn or damaged, replace or repair them at once.

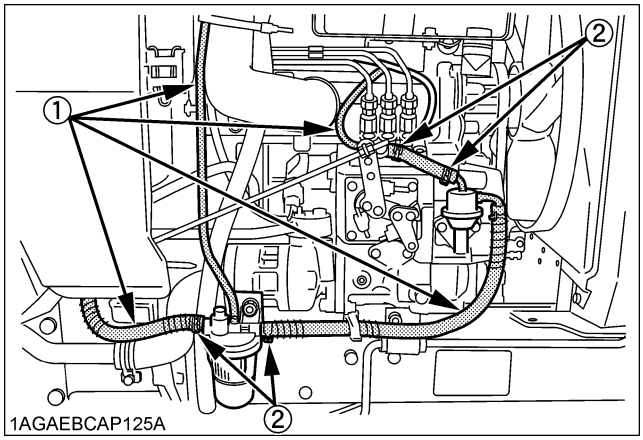

(1) Fuel lines
(2) Clamp bands

NOTE :
- If the fuel line is removed, be sure to properly bleed the fuel system.
  (See "Bleeding Fuel System" in "SERVICE AS REQUIRED" in "PERIODIC SERVICE" section.)

EVERY 200 HOURS

■Replacing Engine Oil Filter

CAUTION

To avoid personal injury:
- **Be sure to stop the engine before changing the oil filter cartridge.**
- **Allow engine to cool down sufficiently, oil can be hot and can burn.**

1. Remove the oil filter.
2. Put a film of clean engine oil on the rubber seal of the new filter.
3. Tighten the filter quickly until it contacts the mounting surface.
   Tighten filter by hand an additional 1/2 turn only.
4. After the new filter has been replaced, the engine oil normally decreases a little. Make sure that the engine oil does not leak through the seal and be sure to check the oil level on the dipstick. Then, replenish the engine oil up to the prescribed level.
5. Properly dispose of used oil.

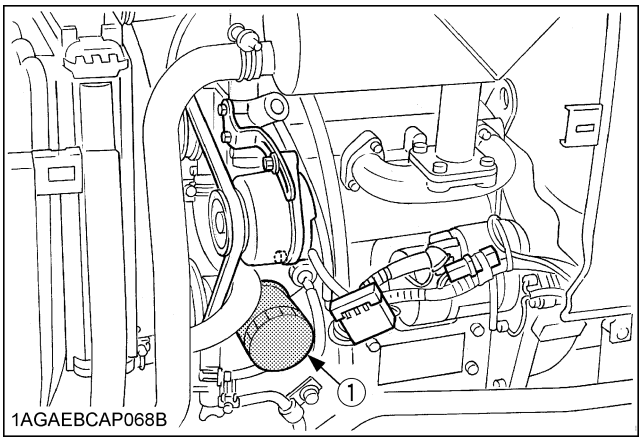

(1) Engine oil filter

IMPORTANT :
- To prevent serious damage to the engine, use only a KUBOTA genuine filter.

https://truckmanualshub.com/

■Changing Engine Oil

CAUTION

To avoid personal injury:

- **Be sure to stop the engine and remove the key before changing the oil.**
- **Allow engine to cool down sufficiently, oil can be hot and can burn.**

1. To drain the used oil, remove the drain plug at the bottom of the engine and drain the oil completely into the oil pan.
   All the used oil can be drained out easily when the engine is still warm.
2. After draining reinstall the drain plug.
3. Fill with the new oil up to the upper notch on the dipstick.
   (See "LUBRICANTS" in "MAINTENANCE" section.)
4. Properly dispose of used oil.

Oil capacity with filter	B2320 B2620	3.1 L (3.3 U.S.qts.)
	B2920	3.5 L (3.7 U.S.qts.)

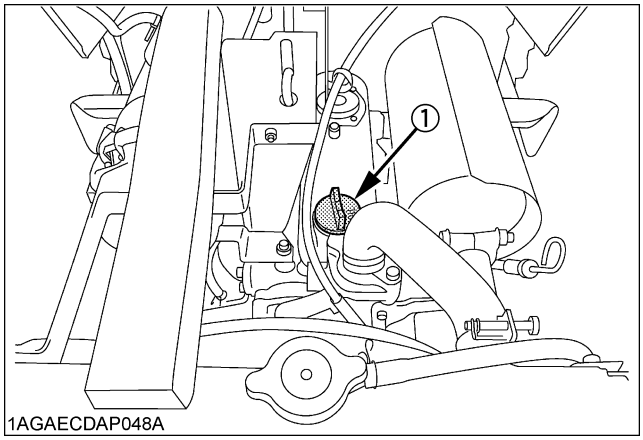

(1) Oil inlet

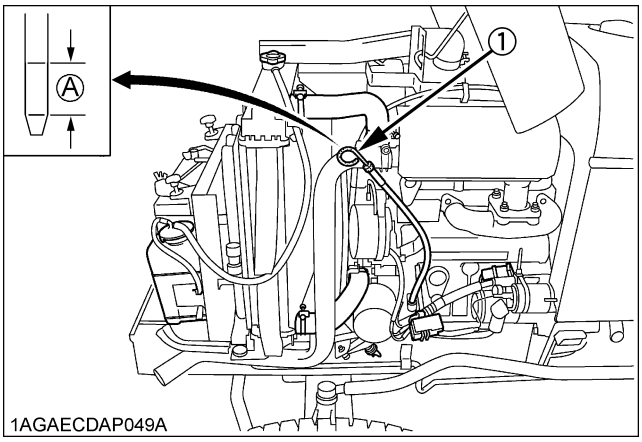

(1) Dipstick *(A) Oil level is acceptable within this range*

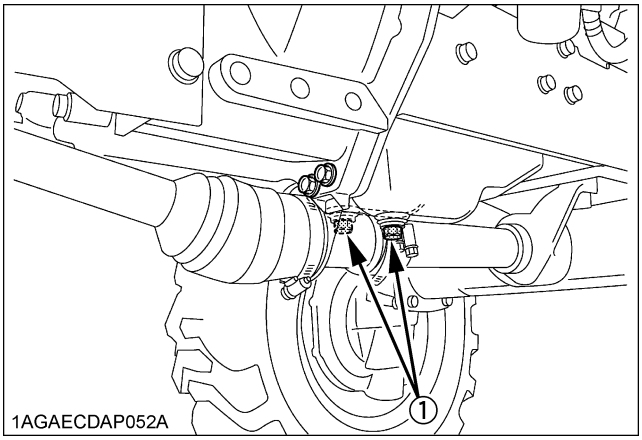

(1) Drain plugs

https://truckmanualshub.com/

■Replacing Transmission Oil Filter [HST Type]

CAUTION

To avoid personal injury:

- **Be sure to stop the engine before changing the oil filter cartridge.**
- **Allow engine to cool down sufficiently, oil can be hot and can burn.**

1. Remove the drain plugs at the bottom of the transmission case and drain the oil completely into the oil pan.
2. After draining reinstall the drain plugs.

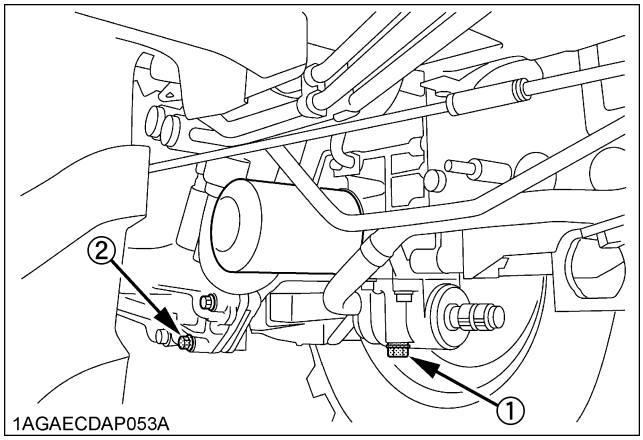

(1) Drain plug
(2) Drain plugs (Both sides)

3. Remove the oil filter.

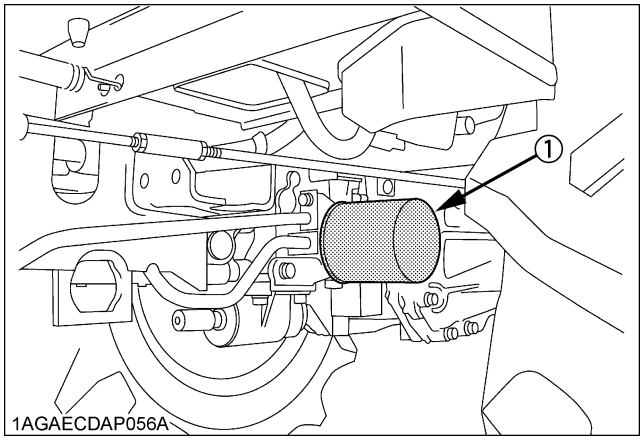

(1) Transmission oil filter [HST Type]

4. Put a film of clean transmission oil on the rubber seal of the new filter.
5. Quickly tighten the filter until it contacts the mounting surface, then, with a filter wrench, tighten it an additional 1 turn only.
6. After the new filter has been replaced, fill the transmission oil up to the upper notch on the dipstick.

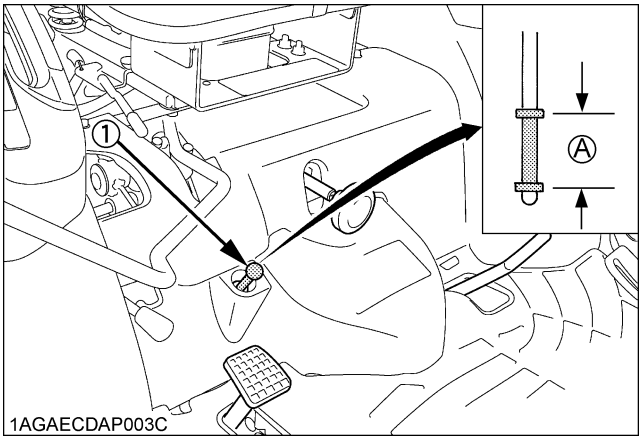

(1) Dipstick *(A) Oil level is acceptable within this range.*

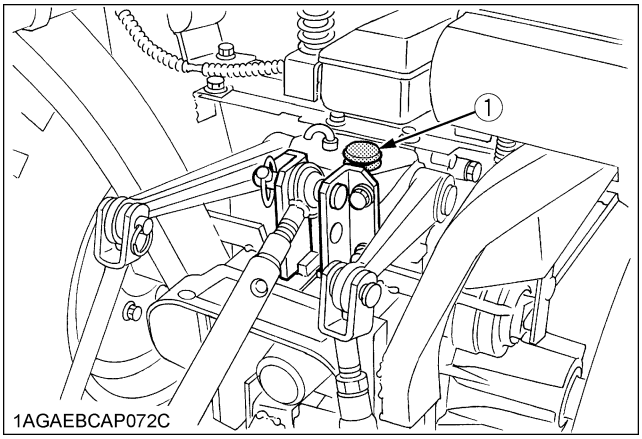

(1) Oil inlet

7. After running the engine for a few minutes, stop the engine and check the oil level again, add oil to the prescribed level.
8. Make sure that the transmission fluid doesn't leak past the seal on the filter.

IMPORTANT :

- To prevent serious damage to the hydraulic system, use only a KUBOTA genuine filter.

https://truckmanualshub.com/

■Checking Radiator Hose and Clamp

Check to see if radiator hoses are properly fixed every 200 hours of operation or six months, whichever comes first.

1. If hose clamps are loose or water leaks, tighten bands securely.
2. Replace hoses and tighten hose clamps securely, if radiator hoses are swollen, hardened or cracked.

Replace hoses and hose clamps every 2 years or earlier if checked and found that hoses are swollen, hardened or cracked.

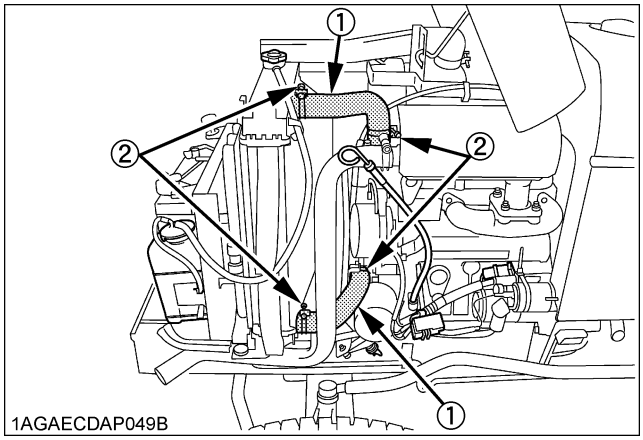

(1) Radiator hoses
(2) Hose clamps

◆ Precaution at Overheating

Take the following actions in the event the coolant temperature is nearly or more than the boiling point, what is called "Overheating"

1. Park the tractor in a safe place and keep the engine unloaded idling.
2. Don't stop the engine suddenly, but stop it after about 5 minutes of unloaded idling.
3. Keep yourself well away from the machine for further 10 minutes or while the steam blows out.
4. Check that there are no dangers such as burns. Get rid of the causes of overheating according to the manual, see "TROUBLESHOOTING" section, and then, start again the engine.

■Checking Intake Air Line

1. Check to see that hoses and hose clamps are tight and not damaged.
2. If hoses and clamps are found worn or damaged, replace or repair them at once.

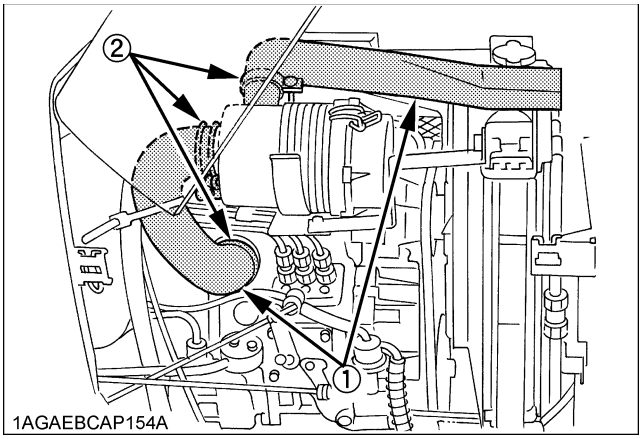

(1) Hose
(2) Hose clamps

EVERY 400 HOURS

■Adjusting Front Axle Pivot [4WD]

If the front axle pivot pin adjustment is not correct, front wheel vibration can occur causing vibration in the steering wheel.

◆ Adjusting procedure

Loosen the lock nut, and tighten the adjusting screw so that the oscillating load is 50 to 100 N (5.1 to 19.7 kgf, 11.2 to 22.5 lbf). Retighten the lock nut.

Consult your local KUBOTA Dealer for further details.

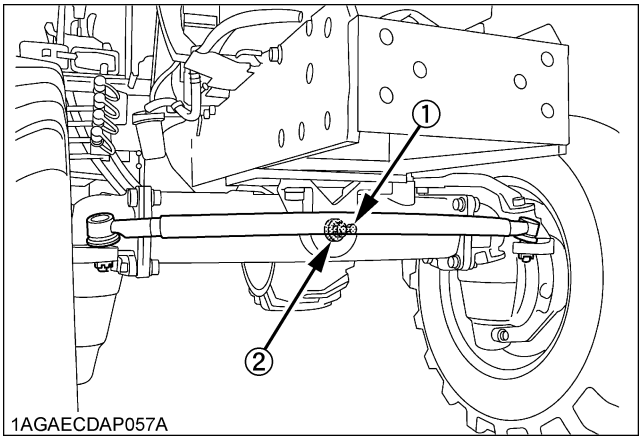

(1) Adjusting screw
(2) Lock nut

https://truckmanualshub.com/

■Changing Transmission Fluid / Replacing Hydraulic Oil Filter

CAUTION

To avoid personal injury:

- **Be sure to stop the engine before changing the oil filter cartridge.**
- **Allow engine to cool down sufficiently, oil can be hot and can burn.**

1. To drain the used oil, remove the drain plug at the bottom of the transmission case and drain the oil completely into the oil pan.
2. After draining reinstall the drain plug.

[Except B2320DTN]

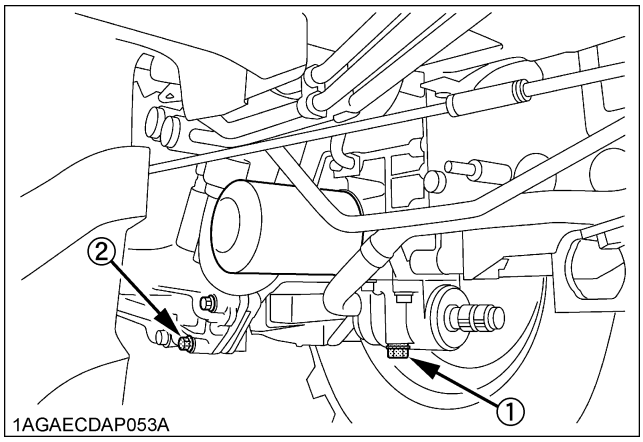

[B2320DTN]

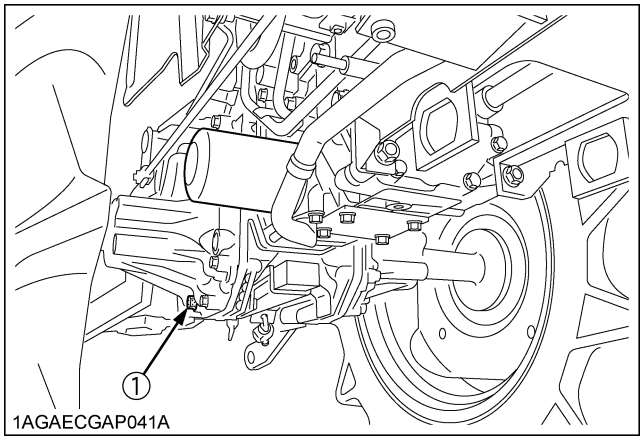

(1) Drain plug
(2) Drain plugs (Both sides)

3. Remove the oil filter.

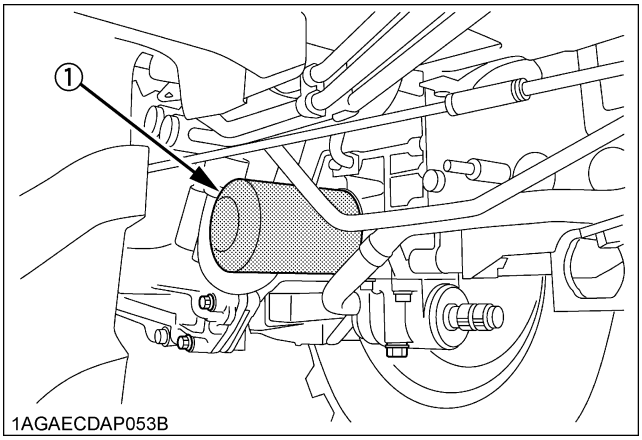

(1) Hydraulic oil filter

4. Put a film of clean transmission oil on rubber seal of new filter.
5. Tighten the filter quickly until it contacts the mounting surface.
   Tighten filter by hand an additional 1/2 turn only.
6. Fill with new KUBOTA SUPER UDT fluid up to the upper notch on the dipstick.
   (See "LUBRICANTS" in "MAINTENANCE" section and "Checking Transmission Fluid Level" in "DAILY CHECK" in "PERIODIC SERVICE" section.)

Oil capacity	B2320DTN B2320DT	14 L (3.7 U.S.gals.)
	B2320HSDN B2320HSD B2620HSD B2920HSD	15 L (4.0 U.S.gals.)

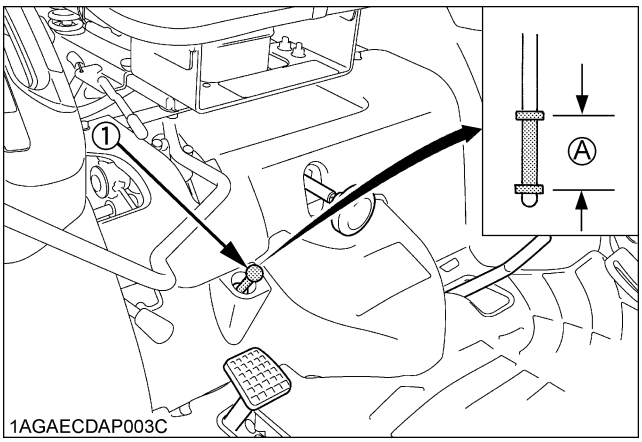

(1) Dipstick *(A) Oil level is acceptable within this range.*

https://truckmanualshub.com/

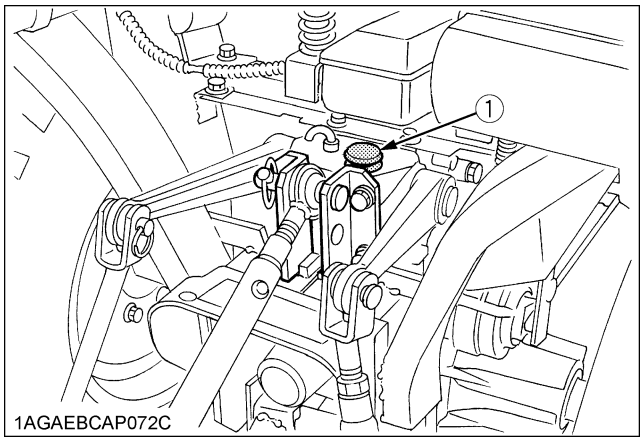

(1) Oil inlet

7. After running the engine for a few minutes, stop it and check the oil level again; add oil to prescribed level.
8. After the new filter has been replaced, the transmission fluid level will decrease a little. Make sure that the transmission fluid does not leak through the seal, and check the fluid level.
   Top off if necessary.
9. Properly dispose of used oil.

IMPORTANT :
- To prevent serious damage to the hydraulic system, use only a KUBOTA genuine filter.
- If the 3-point hitch can not be raised by setting the hydraulic control lever to the UP position after long term storage or when changing the transmission oil, turn steering wheel to the right and left several times to bleed air from the system.
- Do not operate the tractor immediately after changing the transmission fluid.
  Run the engine at medium speed for a few minutes to prevent damage to the transmission.

■Replacing Fuel Filter Element

(See "Cleaning Fuel Filter" in "EVERY 100 HOURS" in "PERIODIC SERVICE" section.)

■Changing Front Axle Case Oil

1. Park the tractor on a firm, flat and level surface.
2. To drain the used oil, remove the right and left drain plugs and filling plug at the front axle case and drain the oil completely into the oil pan.
3. After draining, reinstall the drain plugs.
4. Fill with new oil up to the upper notch on the dipstick.
   (See "LUBRICANTS" in "MAINTENANCE" section.)

IMPORTANT :
- After ten minutes, check the oil level again; add oil to prescribed level.

5. After filling, reinstall the filling plug.
6. Properly dispose of used oil.

Oil capacity	Except B2320DTN	3.2 L (3.4 U.S.qts.)
	B2320DTN	3.0 L (3.2 U.S.qts.)

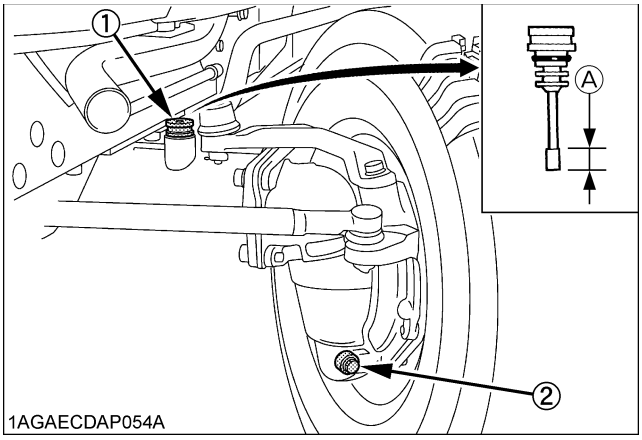

(1) Filling plug with dipstick
(2) Drain plug
(A) Oil level is acceptable within this range

EVERY 800 HOURS

■Adjusting Engine Valve Clearance

Consult your local KUBOTA Dealer for this service.

EVERY 1500 HOURS

■Checking Fuel Injection Nozzle Injection Pressure

Consult your local KUBOTA Dealer for this service.

EVERY 3000 HOURS

■Checking Injection Pump

Consult your local KUBOTA Dealer for this service.

EVERY 1 YEAR

■Replacing Air Cleaner Primary Element and Secondary Element

(See "Cleaning Air Cleaner Primary Element" in "EVERY 100 HOURS" in "PERIODIC SERVICE" section.)

https://truckmanualshub.com/

EVERY 2 YEARS

■Flushing Cooling System and Changing Coolant

CAUTION

To avoid personal injury:

- **Do not remove radiator cap while coolant is hot. When cool, slowly rotate cap to the first stop and allow sufficient time for excess pressure to escape before removing the cap completely.**

1. Stop the engine, remove the key and let it cool down.
2. To drain the coolant, open the radiator drain cock, and remove radiator cap. The radiator cap must be removed to completely drain the coolant.
3. After all coolant is drained, close the drain cock.
4. Fill with clean soft water and cooling system cleaner.
5. Follow directions of the cleaner instruction.
6. After flushing, fill with clean soft water and anti-freeze until the coolant level is just below the radiator cap. Install the radiator cap securely.
7. Fill with coolant up to the "FULL" mark of recovery tank.
8. Start and operate the engine for few minutes.
9. Stop the engine, remove the key and let cool.
10. Check coolant level of recovery tank and add coolant if necessary.
11. Properly dispose of used coolant.

Coolant capacity (with recovery tank)	3.9 L (4.1 U.S.gals.)

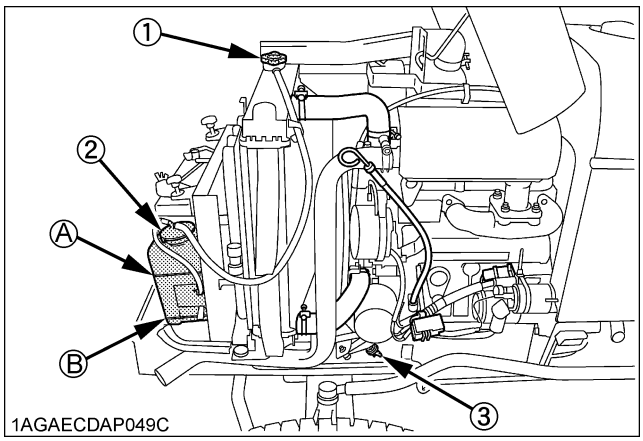

(1) Radiator cap
(2) Recovery tank
(3) Drain cock
(A) "FULL"
(B) "LOW"

IMPORTANT :

- Do not start engine without coolant.
- Use clean, fresh soft water and anti-freeze to fill the radiator and recovery tank.
- When mixing the anti-freeze with water, the anti-freeze mixing ratio is 50 %.
- Securely tighten radiator cap. If the cap is loose or improperly fitted, water may leak out and the engine could overheat.

■Anti-Freeze

CAUTION

To avoid personal injury:

- **When using antifreeze, put on some protection such as rubber gloves (Antifreeze contains poison.).**
- **If it is swallowed, seek immediate medical help. Do NOT make a person throw up unless told to do so by poison control or a health care professional. Use standard first aid and CPR for signs of shock or cardiac arrest. Call your local Poison Control Center or your local emergency number for further assistance.**
- **When antifreeze comes in contact with the skin or clothing, wash it off immediately.**
- **Do not mix different types of Antifreeze. The mixture can produce chemical reaction causing harmful substances.**
- **Antifreeze is extremely flammable and explosive under certain conditions. Keep fire and children away from antifreeze.**
- **When draining fluids from the engine, place some container underneath the engine body.**
- **Do not pour waste onto the grounds, down a drain, or into any water source.**
- **Also, observe the relevant environmental protection regulations when disposing of antifreeze.**

Always use a 50/50 mix of long-life coolant and clean soft water in KUBOTA engines.
Consult your local KUBOTA Dealer concerning coolant for extreme conditions.

1. Long-life coolant (hereafter LLC) comes in several types. Use ethylene glycol (EG) type for this engine.
2. Before employing LLC-mixed cooling water, fill the radiator with fresh water and empty it again.
   Repeat this procedure 2 or 3 times to clean up the inside.
3. Mixing the LLC
   Premix 50% LLC with 50% clean soft water. When mixing, stir it up well, and then fill into the radiator.
4. The procedure for the mixing of water and antifreeze differs according to the make of the antifreeze and the ambient temperature. Refer to SAE J1034 standard, more specifically also to SAE J814c.

Vol % Anti-freeze	Freezing Point		Boiling Point*	
	℃	℉	℃	℉
50	-37	-34	108	226

https://truckmanualshub.com/

∗ At 1.013 x 10^5Pa (760mmHg) pressure (atmospheric). A higher boiling point is obtained by using a radiator pressure cap which permits the development of pressure within the cooling system.

5. Adding the LLC
   (1) Add only water if the mixture reduces in amount by evaporation.
   (2) If there is a mixture leak, add the LLC of the same manufacturer and type in the same mixture percentage.
      ∗ Never add any long-life coolant of different manufacturer. (Different brands may have different additive components, and the engine may fail to perform as specified.)
6. When the LLC is mixed, do not employ any radiator cleaning agent. The LLC contains anticorrosive agent. If mixed with the cleaning agent, sludge may build up, adversely affecting the engine parts.
7. Kubota's genuine long-life coolant has a service life of 2 years. Be sure to change the coolant every 2 years.

NOTE :
- The above data represent industry standards that necessitate a minimum glycol content in the concentrated antifreeze.

■Replacing Radiator Hose (Water pipes)

Replace the hoses and clamps.
(See "Checking Radiator Hose and Clamp" in "EVERY 200 HOURS" in "PERIODIC SERVICE" section.)

■Replacing Fuel Lines

Consult your local KUBOTA Dealer for this service.

■Replacing Intake Air Line

Consult your local KUBOTA Dealer for this service.

SERVICE AS REQUIRED

■Bleeding Fuel System

Air must be removed:
1. When the fuel filter or lines are removed.
2. When tank is completely empty.
3. After the tractor has not been used for a long period of time.

◆ **Bleeding procedure is as follows:**
1. Fill the fuel tank with fuel.
2. Start the engine and run for about 30 seconds, and then stop the engine.

■Draining Clutch Housing Water

The tractor is equipped with a drain plug under the clutch housing.
After operating in rain, snow or tractor has been washed, water may get into the clutch housing.
Remove the drain plug and drain the water, then install the plug again.

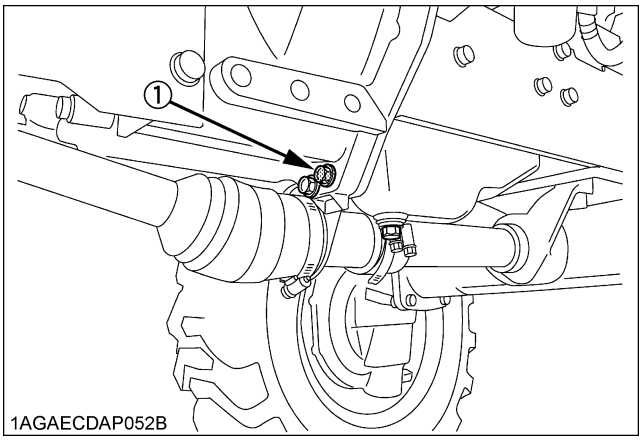

(1) Water drain plug

https://truckmanualshub.com/

■Replacing Fuse

The tractor electrical system is protected from potential damage by fuses.
A blown fuse indicates that there is an overload or short somewhere in the electrical system.
If any of the fuses should blow, replace with a new one of the same capacity.

IMPORTANT :

- Before replacing a blown fuse, determine why the fuse blew and make any necessary repairs. Failure to follow this procedure may result in serious damage to the tractor electrical system. Refer to the "TROUBLESHOOTING" section of this manual or your local KUBOTA Dealer for specific information dealing with electrical problems.

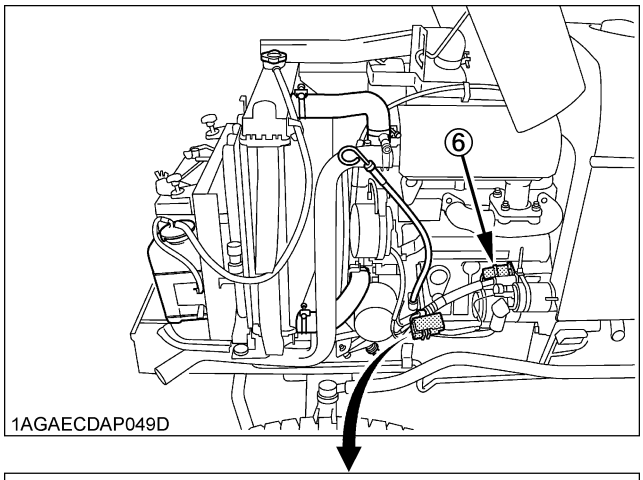

1AGAECDAP049D

HAZARD	10A	①
SOLENOID	30A	②
KEY STOP	5A	③
HEAD LIGHT PANEL	10A	④
WORK LIGHT	20A	⑤

1AGAECDAP062A

◆ **Protected circuit**

FUSE No.	CAPACITY (A)	Protected circuit
(1)	10	HAZARD
(2)	30	SOLENOID
(3)	5	KEY STOP
(4)	10	HEAD LIGHT PANEL
(5)	20	WORK LIGHT
(6)	Slow blow fuse	Check circuit against wrong battery connection

■Replacing Light Bulb

1. Head light
   Take the bulb out of the light body and replace with a new one.
2. Other lights
   Detach the lens and replace the bulb.

Light	Capacity
Head light	23W
Tail light	8W
Turn signal / Hazard light	23W and 23W
Instrument panel light	1.7W
Hazard light switch indicator	0.6W

https://truckmanualshub.com/

STORAGE

CAUTION

To avoid personal injury:

- **Do not clean the machine while the engine is running.**
- **To avoid the danger of exhaust fume poisoning, do not operate the engine in a closed building without proper ventilation.**
- **When storing, remove the key from the key switch to avoid unauthorized persons from operating the tractor and getting injured.**

TRACTOR STORAGE

If you intend to store your tractor for an extended period of time, follow the procedures outlined below.

These procedures will insure that the tractor is ready to operate with minimum preparation when it is removed from storage.

1. Check the bolts and nuts for looseness, and tighten if necessary.
2. Apply grease to tractor areas where bare metal will rust also to pivot areas.
3. Detach the weights from the tractor body.
4. Inflate the tires to a pressure a little higher than usual.
5. Change the engine oil and run the engine to circulate oil throughout the engine block and internal moving parts for about five minutes.
6. Keep the clutch disengaged. If the clutch is left engaged for a long period of time, the clutch plate may rust, making clutch disengagement impossible at the next operation.

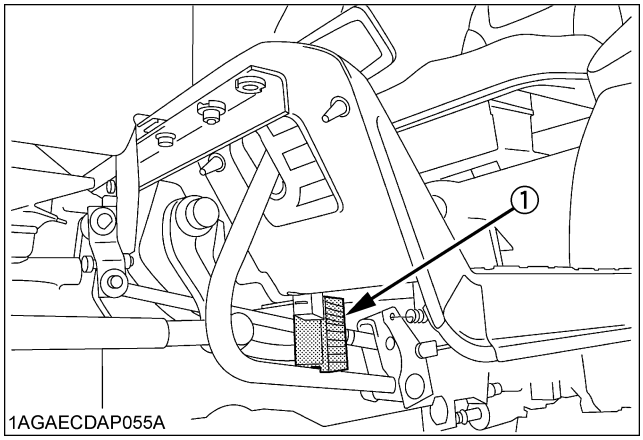

(1) Wooden block

7. With all implements lowered to the ground, coat any exposed hydraulic cylinder piston rods with grease.
8. Remove the battery from the tractor. Store the battery following the battery storage procedures.
   (See "Battery" in "EVERY 100 HOURS" in "PERIODIC SERVICE" section.)
9. Keep the tractor in a dry place where the tractor is sheltered from the elements. Cover the tractor.
10. Store the tractor indoors in a dry area that is protected from sunlight and excessive heat. If the tractor must be stored outdoors, cover it with a waterproof tarpaulin.
    Jack the tractor up and place blocks under the front and rear axles so that all four tires are off the ground. Keep the tires out of direct sunlight and extreme heat.

IMPORTANT :

- When washing the tractor, be sure to stop the engine. Allow sufficient time for the engine to cool before washing.
- Cover the tractor after the muffler and the engine have cooled down.

REMOVING THE TRACTOR FROM STORAGE

1. Check the tire air pressure and inflate the tires if they are low.
2. Jack the tractor up and remove the support blocks from under the front and rear axles.
3. Install the battery. Before installing the battery, be sure it is fully charged.
4. Check the fan belt tension.
5. Check all fluid levels (engine oil, transmission/ hydraulic oil, engine coolant and any attached implements).
6. Start the engine. Observe all gauges. If all gauges are functioning properly and reading normal, move the tractor outside. Once outside, park the tractor and let the engine idle for at least five minutes. Shut the engine off and walk around tractor and make a visual inspection looking for evidence of oil or water leaks.
7. With the engine fully warmed up, release the parking brake and test the brakes for proper adjustment as you move forward. Adjust the brakes as necessary.

https://truckmanualshub.com/

TROUBLESHOOTING

ENGINE TROUBLESHOOTING

If something is wrong with the engine, refer to the table below for the cause and its corrective measure.

Trouble		Cause	Countermeasure
Engine is difficult to start or won't start.		● No fuel flow.	● Check the fuel tank and the fuel filter. Replace filter if necessary.
		● Air or water is in the fuel system.	● Check to see if the fuel line coupler bolt and nut are tight. ● Bleed the fuel system. (See "Bleeding Fuel System" in "SERVICE AS REQUIRED" in "PERIODIC SERVICE" section.) ● Remove water from the system and replace the fuel filter.
		● In winter, oil viscosity increases, and engine revolution is slow.	● Use oils of different viscosities, depending on ambient temperatures. ● Use engine block heater. (Option)
		● Battery becomes weak and the engine does not turn over quick enough.	● Clean battery cables and terminals. ● Charge the battery. ● In cold weather, always remove the battery from the engine, charge and store it indoors. Install it on the tractor only when the tractor is going to be used.
Insufficient engine power.		● Insufficient or dirty fuel. ● The air cleaner is clogged.	● Check the fuel system. ● Clean or replace the element.
Engine stops suddenly.		● Insufficient fuel.	● Refuel. ● Bleed the fuel system if necessary.
Exhaust fumes are colored.	Black	● Fuel quality is poor. ● Too much oil. ● The air cleaner is clogged.	● Change the fuel and fuel filter. ● Check the proper amount of oil. ● Clean or replace the element.
	Blue white	● The inside of exhaust muffler is dumped with fuel. ● Injection nozzle trouble. ● Fuel quality is poor.	● Heat the muffler by applying load to the engine. ● Check the injection nozzle. ● Change the fuel and fuel filter.
Engine overheats.		● Engine overloaded.	● Shift to lower gear or reduce load.
		● Low coolant level.	● Fill cooling system to the correct level; check radiator and hoses for loose connections or leaks.
		● Loose or defective fan belt.	● Adjust or replace fan belt.
		● Dirty radiator core or grille screens.	● Remove all trash.
		● Coolant flow route corroded.	● Flush cooling system.

If you have any questions, consult your local KUBOTA Dealer.

https://truckmanualshub.com/

OPTIONS

Consult your local KUBOTA Dealer for further detail.

- Rear Work Light.
  High visibility for night work.
- Front end weights.
  For front ballast.
- Front weight bracket
  To mount Front end weights.
- Engine Block Heater
  For extremely cold weather starting

https://truckmanualshub.com/

APPENDICES

INDEX

3-point Hitch Lowering Speed 35
Air Cleaner Primary Element.....59
Air Cleaner Primary Element and Secondary Element 67
Anti-Freeze.....68
Battery.....58
Block Heater (Option).....15
Brake Pedal.....61
Brake Pedals (Right and Left) 21
Brake Pedals and Clutch Pedal.....54
Check Chains.....33
Clutch Pedal 21
Clutch Pedal 61
Control Lever and Hydraulic Hose Connections 37
Coolant Level 53
Coolant Temperature Gauge.....26
Differential Lock.....27
Directions for Use of Power Steering 28
Do not Operate the Tractor at Full Speed for the First 50 Hours 17
Draining Clutch Housing Water.....69
Drawbar.....32
Drawbar Length.....33
Dual Tires 40
Easy Checker (TM) 25
Electrical Wiring and Battery Cables 55
Engine Oil.....63
Engine Oil Filter.....62
Engine Oil Level 52
Engine Side Cover 51
Engine Start System.....56
Engine Valve Clearance.....67
Fan Belt Tension 60
Flushing Cooling System and Coolant 68
Foldable ROPS 19
Foot Throttle [Manual Transmission Type].....23
Front Axle Case Oil 67
Front Axle Pivot [4WD] 65
Front Ballast 44
Front Grille.....50
Front Wheel Drive Lever 23
Front Wheels.....40
Fuel Filter 60
Fuel Filter Element 67
Fuel Gauge..... 26
Fuel Injection Nozzle Injection Pressure 67
Fuel Line..... 62
Fuel Lines 69
Fuel System..... 69
Fuse..... 70
Gauges, Meter and Easy Checker(TM)..... 54
Grill and Radiator Screen 54
Hand Throttle Lever..... 23
Head Light / Turn Signal / Hazard Light Switch20
Head Light, Hazard Light etc. 54
Hood 50
Hourmeter / Tachometer 26
Hydraulic Block Type Outlet 35
Hydraulic Control 34
Hydraulic Control Unit Use Reference Chart... 39
Immediately Stop the Engine if:..... 25
Implement Lowering Limit..... 35
Inflation Pressure..... 40
Injection Pump 67
Intake Air Line..... 65
Intake Air Line..... 69
Lifting Rod (Right)..... 32
Light Bulb..... 70
Loader / Remote Control Valve Lever 37
Lubricating Grease Fittings..... 55
Lubricating Oil for New Tractors 17
Main Gear Shift Lever & Range Gear Shift Lever (L-M-H) [Manual Transmission Type] 22
Movable Parts..... 55
Operating on Slopes or Rough Terrain..... 28
Operating the Tractor on a Road..... 28
Operator's Seat..... 19
Parking Brake 24
Parking Brake 27
Position Control 34
PTO Gear Shift Lever 29
PTO shaft Cover and Shaft Cap..... 30
Radiator Hose (Water pipes) 69
Radiator Hose and Clamp 65
Range Gear Shift Lever (L-M-H) [HST Type] .. 22
Rear Ballast 45
Rear Wheels..... 42
Refueling 52

https://truckmanualshub.com/

Seat Belt.....20
Seat Belt and ROPS.....54
Selecting the holes of lifting rods and lower links 32
Selecting the Top Link Mounting Holes.....32
Speed Control Pedal 24
Speed Set Device.....25
Stationary PTO.....30
Stopping 25
To Fold the ROPS.....17
To Raise the ROPS to Upright Position 18
Top Link.....32
Transmission Fluid / Hydraulic Oil Filter.....66
Transmission Fluid Level.....53
Transmission Oil Filter [HST Type] 64
Valve Lock.....38
Walk Around Inspection 51
Warm-up Transmission Oil at Low Ambient Temperatures 15
Wheel Bolt Torque.....57