https://truckmanualshub.com/

ALLISON 1000/2000 SERIES

INDEX

CLUTCH AND SOLENOID APPLICATION CHART 4
TRANSMISSION IDENTIFICATION TAG INFORMATION 5
GENERAL DESCRIPTION AND OPERATION 6
ELECTRICAL OPERATION 9
THROTTLE POSITION SENSOR 10
NEUTRAL START BACK UP SWITCH 11
TRANSMISSION CONTROL MODULE CONNECTOR IDENTIFICATION 12
DIAGNOSTIC TROUBLE CODE IDENTIFICATION 14
SOLENOID IDENTIFICATION AND OPERATION 16
INTERNAL WIRING HARNESS SCHEMATIC AND RESISTANCE CHART 18
EXTERNAL WIRING HARNESS SCHEMATIC AND TERMINAL IDENTIFICATION 19
PRESSURE SWITCH ASSEMBLY IDENTIFICATION AND OPERATION 20
RETRIEVING DIAGNOSTIC TROUBLE CODES 22
LINE PRESSURE TESTS 23
BELL HOUSING OIL PASSAGE IDENTIFICATION 24
MAIN CASE "FRONT" OIL PASSAGE IDENTIFICATION 26
MAIN CASE "REAR" OIL PASSAGE IDENTIFICATION 27
OIL PUMP COVER OIL PASSAGE IDENTIFICATION 29
SHIFT VALVE BODY OIL PASSAGE IDENTIFICATION 31
MAIN VALVE BODY "TOP VIEW" OIL PASSAGE IDENTIFICATION 32
MAIN VALVE BODY "BOTTOM VIEW" OIL PASSAGE IDENTIFICATION 33
MAIN CASE "BOTTOM VIEW" OIL PASSAGE IDENTIFICATION 35
TRANSMISSION DISASSEMBLY PROCESS 36
COMPONENT REBUILD
- *TRANSMISSION CASE ASSEMBLY* 53
- *OIL PUMP AND BELLHOUSING ASSEMBLY* 55
- *FOUR DIFFERENT BELL HOUSINGS IDENTIFICATION* 66
- *C1/C2 CLUTCH HOUSING ASSEMBLY* 68
- *C1/C2 CLUTCH HOUSING SNAP RING IDENTIFICATION* 72
- *VALVE BODY ASSEMBLY* 80
- *SOLENOID AIR CHECKS* 83
- *EXTENSION HOUSING ASSEMBLY* 91
- *GEAR TRAIN PARTS* 96
- *CASE CLUTCH PARTS* 100

FINAL TRANSMISSION ASSEMBLY PROCESS 102
BOLT IDENTIFICATION CHART 119
TORQUE SPECIFICATION CHART 120

CAUTION: ATSG service manuals are intended for use by professional, qualified technicians. Attempting repairs or service without the proper training, tools and equipment could cause injury to you or others and damage to the vehicle that may cause it not to operate properly.

AUTOMATIC TRANSMISSION SERVICE GROUP
18639 S.W. 107TH AVENUE
MIAMI, FLORIDA 33157
(305) 670-4161

Copyright © ATSG 2000 **May, 2000**

https://truckmanualshub.com/

Updated
October, 2003

INTRODUCTION

ALLISON 1000/2000 SERIES

Beginning at the start of production for the 2000 model year, General Motors introduced two new Allison automatic transmissions referred to as the 1000 Series and the 2000 Series, for light duty (8600-19850 GVW) and medium duty (19850-3000 GVW) commercial trucks.

The 1000 and 2000 Series transmissions both have helical cut planetary gear systems to minimize noise concerns and come in two different gear ratio configurations. The 1000 Series uses closer steps to improve the shift quality that we now expect from an automatic transmission. The 2000 Series uses wider steps to accommodate the greater vehicle weights associated with the 2000 Series. The gear ratios for both of the new units are shown in this Manual.

The 1000 and 2000 Series transmissions have a Park position, Reverse, Neutral and five forward speeds with 5th gear being overdrive, and are completely electronic shift controlled. Notice that the standard General Motors case connector has been utilized, and the Park/Neutral switch is exactly the same switch used currently on the THM 4L60-E transmission. Two different bottom pan configurations are also provided to make these units even more versitile. The 1000 and 2000 Series transmissions utilize five clutch packs (No Bands-No Freewheels) to obtain the five forward gears and reverse. This manual will cover the dis-assembly, rebuild of all components and re-assembly of both the 1000 and 2000 Series units.

No part of any ATSG publication may be reproduced, stored in any retrieval system or transmitted in any form or by any means, including but not limited to electronic, mechanical, photocopying, recording or otherwise, without ***written*** permission of Automatic Transmission Service Group. This includes all text illustrations, tables and charts.

"Portions of materials contained herein have been reprinted under license from General Motors Corp, Service & Parts Operations."

The information and part numbers contained in this booklet have been carefully compiled from industry sources known for their reliability, but ATSG does not guarantee its accuracy.

Copyright © ATSG 2000

DALE ENGLAND
FIELD SERVICE CONSULTANT

WAYNE COLONNA
TECHNICAL SUPERVISOR

PETER LUBAN
TECHNICAL CONSULTANT

JON GLATSTEIN
TECHNICAL CONSULTANT

JERRY GOTT
TECHNICAL CONSULTANT

GERALD CAMPBELL
TECHNICAL CONSULTANT

JIM DIAL
TECHNICAL CONSULTANT

ED KRUSE
TECHNICAL CONSULTANT

GREGORY LIPNICK
TECHNICAL CONSULTANT

DAVID CHALKER
TECHNICAL CONSULTANT

MIKE SOUZA
TECHNICAL CONSULTANT

ROLAND ALVAREZ
TECHNICAL CONSULTANT

AUTOMATIC TRANSMISSION SERVICE GROUP
18639 S.W. 107TH AVENUE
MIAMI, FLORIDA 33157
(305) 670-4161

ALLISON 1000/2000 SERIES

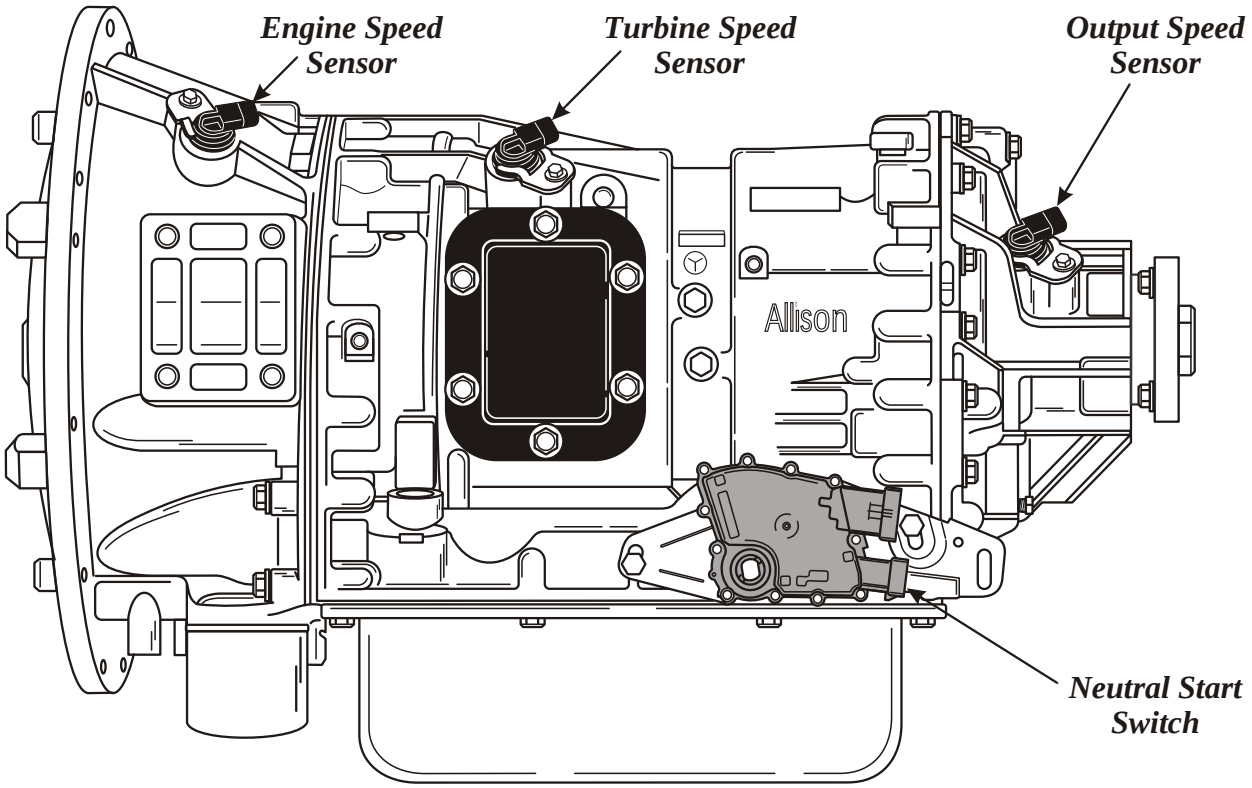

TWO WHEEL DRIVE

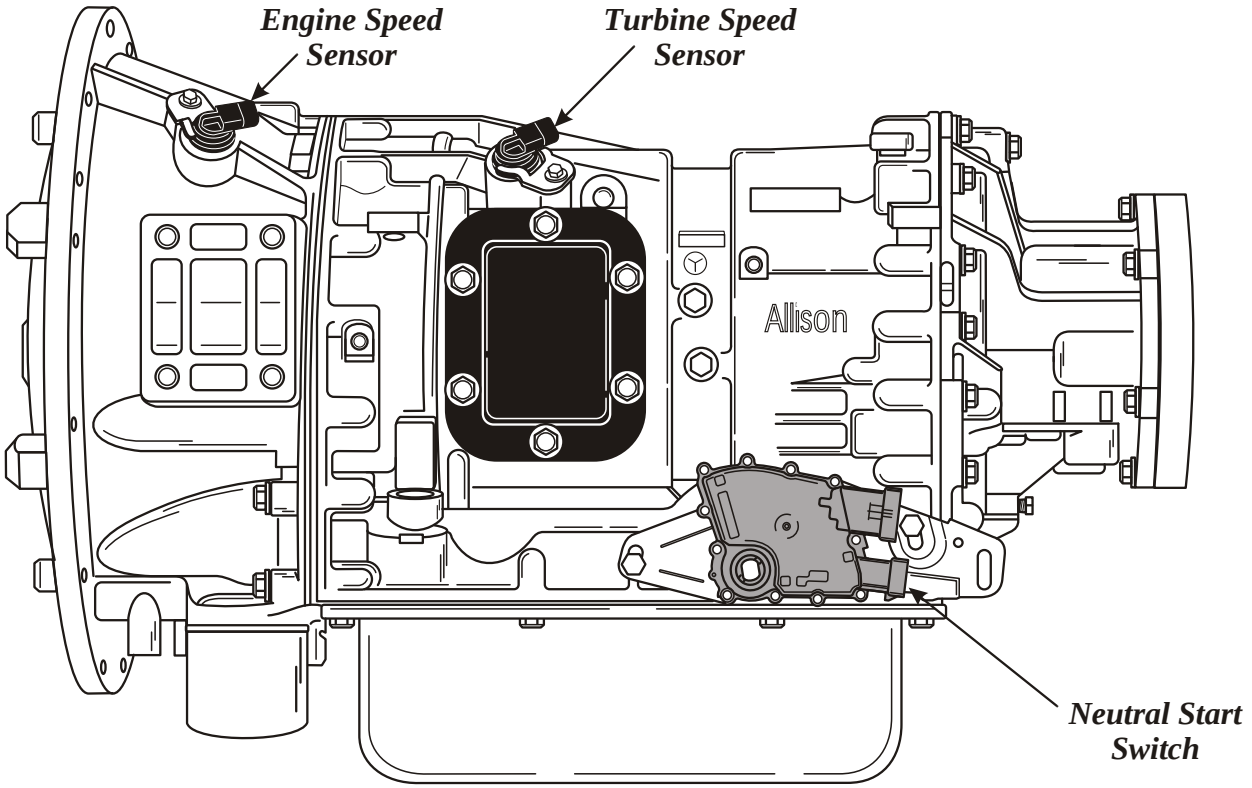

FOUR WHEEL DRIVE

Copyright © 2000 ATSG

Figure 1

ALLISON 1000/2000 SERIES TRANSMISSION

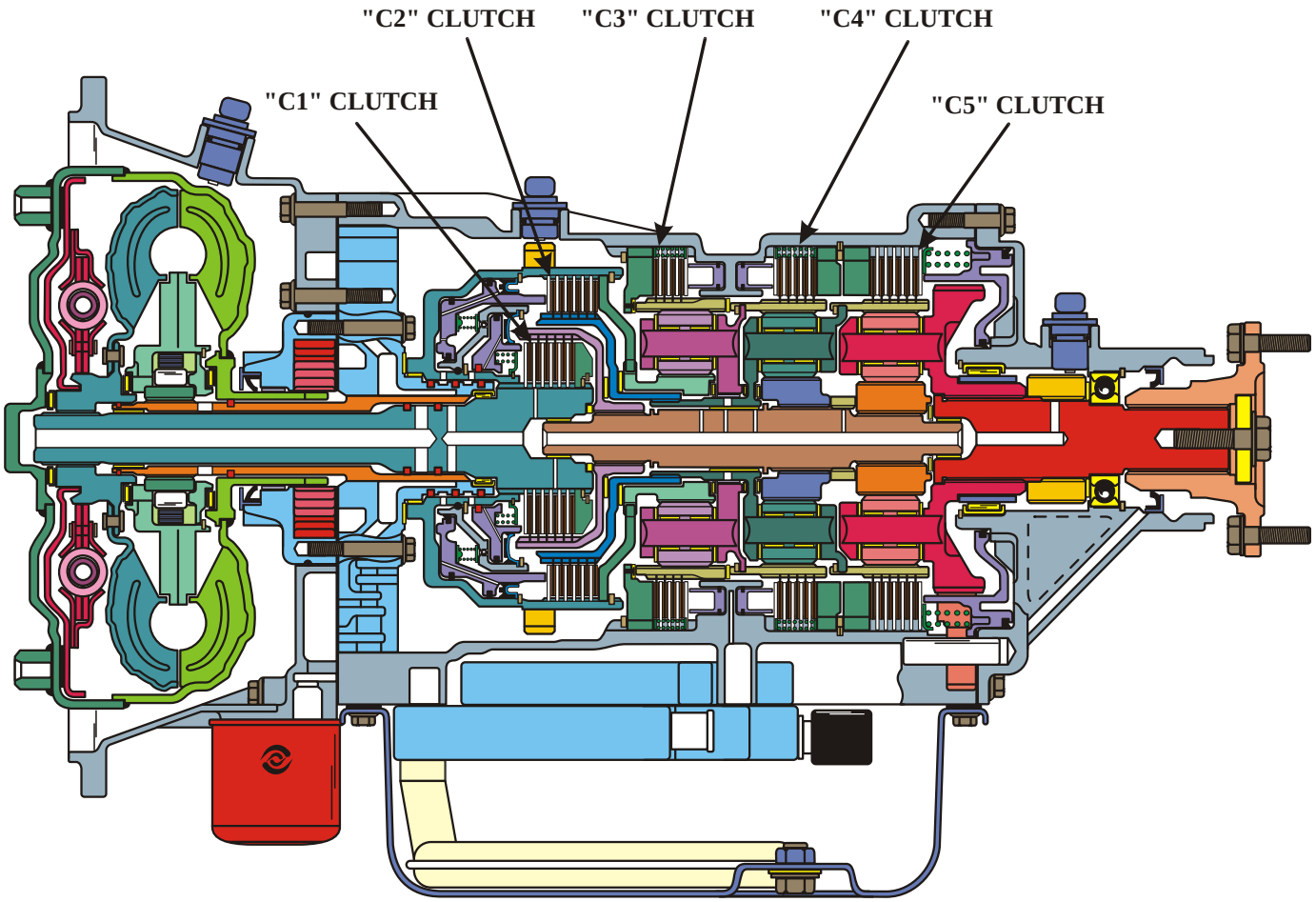

Range	C1 Clut	C2 Clut	C3 Clut	C4 Clut	C5 Clut	Sol "A"	Sol "B"	Sol "C"	Sol "D"	Sol "E"	Sol "F"	Ratios 1000	Ratios 2000
Park					*ON*	**	**	*X*	*X*	*X*			
Reverse			*ON*		*ON*	**	**		*X*	*X*		*4.49*	*5.09*
Neutral					*ON*	**	**	*X*	*X*	*X*			
OD-1st	*ON*				*ON*	**	**		*X*			*3.10*	*3.51*
OD-2nd	*ON*			*ON*		**	**				*	*1.81*	*1.90*
OD-3rd	*ON*		*ON*			**	**	*X*			*	*1.41*	*1.44*
OD-4th	*ON*	*ON*				**	**	*X*		*X*	*	*1.00*	*1.00*
OD-5th		*ON*	*ON*			**	**			*X*	*	*0.71*	*0.74*

X = Electrical Power Applied To Solenoid

** = Apply Solenoid "F" To Apply Converter Clutch*

*** = Solenoids "A" and "B" are "Trim" solenoids used to control oncoming, off-going, and holding pressure to the five clutch packs.*

Copyright © 2000 ATSG

Figure 2

https://truckmanualshub.com/

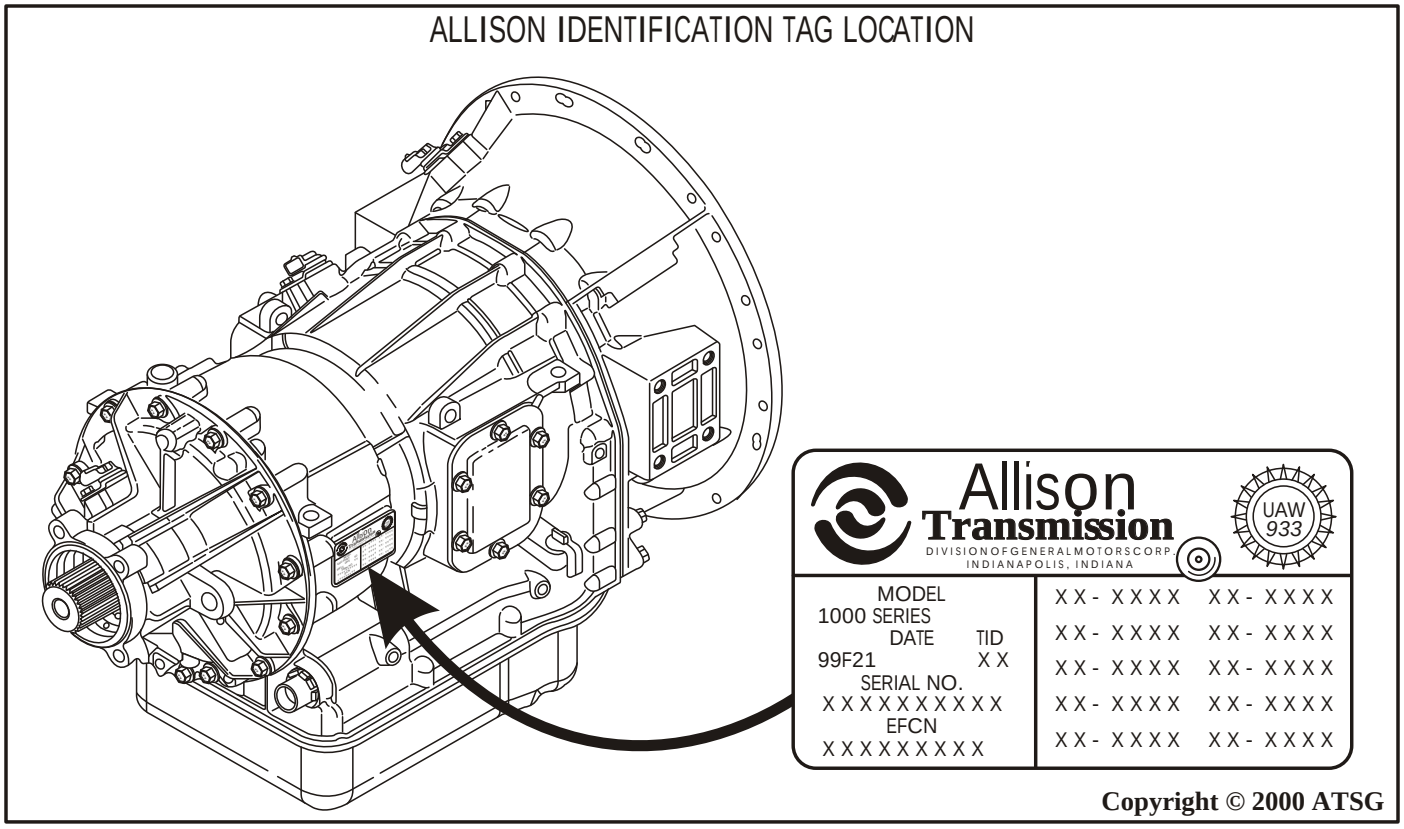

Figure 3

TRANSMISSION IDENTIFICATION TAG

Several different transmission configurations are available within the 1000/2000/2400 Series. The different models are identified as follows:

1000 Series	**Heavy-duty automatic transmission *with* parking pawl. Maximum GVW = 19850 lb.**
2000 Series	**Heavy-duty automatic transmission *without* parking pawl. Maximum GVW = 30000 lb.**
2400 Series	**Heavy-duty automatic transmission *with* parking pawl. Maximum GVW = 26000 lb.**

Each transmission is identified by a model designation, group numbers, and serial number. This information is included on the transmission identification tag located on the right rear side of the transmission case, as shown in Figure 3.

This information must be used when discussing specific service issues, or when parts replacement is necessary. The transmission identification tag also includes the date of manufacture, and also the transmission identification number used with the diagnostic systems.

Special Note:

Allison Series 1000/2000/2400 transmissions are designed and manufactured to metric standards, and metric tools are required for service.

The cooler ports and the main line pressure tap are the only non-metric fittings on the transmission case. The output flange/yoke retaining bolt is also non-metric.

https://truckmanualshub.com/

GENERAL DESCRIPTION AND OPERATION

Allison 1000/2000/2400 Series transmissions are torque converter driven fully automatic units. All models have neutral, reverse, and up to 5 forward speeds, with 5th gear being overdrive. Refer to Figure 2 for the different gears ratios available in the different models.

The torque converter housings of these units mate directly to SAE No. 2, SAE No. 3, or direct to the engine block in some cases. Flexplate drive is used for all engine to transmission torque transfer.

Several different torque converters are available to match the transmissions to a wide variety of diesel and gasoline engines. The torque converter is a single stage, three element unit, consisting of a pump, stator, and turbine, with the addition of a converter clutch to provide direct drive from the engine to the transmission. The converter clutch is applied and released electronically, and changes the direction of fluid flow in the converter as in most typical converters today.

Internally these units contain 2 rotating clutches (C1 and C2), and 3 brake clutches (C3, C4 and C5), to direct the flow of torque through the unit. All clutch packs are hydraulically applied and spring released, with automatic wear compensation, and their locations in the transmission are shown in the cut-away in Figure 2.

The Transmission Control Module (TCM) signals six different solenoids, located on the valve body, to apply and release clutches based on vehicle speed and power combinations, and the range selected by the operator.

The planetary gear train consists of three constant mesh, helical gear planetary sets, refered to as P1, P2, and P3. By the engagement of the 5 clutch packs in various combinations, the planetary gear sets react singly or together to provide 5 forward speeds, neutral, and reverse.

A common hydraulic system provides fluid for all hydraulic operations, lubrication, and cooling. The front oil pump, driven by the converter, provides the pressure needed for the hydraulic system, and comes from the common sump in the bottom pan.

A suction filter, located in the bottom pan provides general protection to the entire hydraulic system, and a spin-on filter provides full time protection for the control solenoids and multipass protection for the entire system.

The spin-on filter is located externally on the converter housing at the lower left front of the transmission.

Some 1000/2000/2400 Series transmissions are available with an optional extension housing that accommodates an OEM installed two shoe, expanding type, drum parking brake.

The 1000/2000/2400 Series transmissions use lever type shift selectors, as shown in Figure 4. The vehicle may be equipped with one or two shift selectors, depending on the number of operator stations for driving the vehicle and/or operating a variety of chassis mounted equipment. The shift positions on the shift selector can vary according to the shift selector installed in the vehicle.

NOTE: Refer to Figure 5 for the various Shift Selector positions, and corresponding ranges that can be attained for all 1000/2000/2400 Series models.

TYPICAL MANUAL SHIFT TOWER

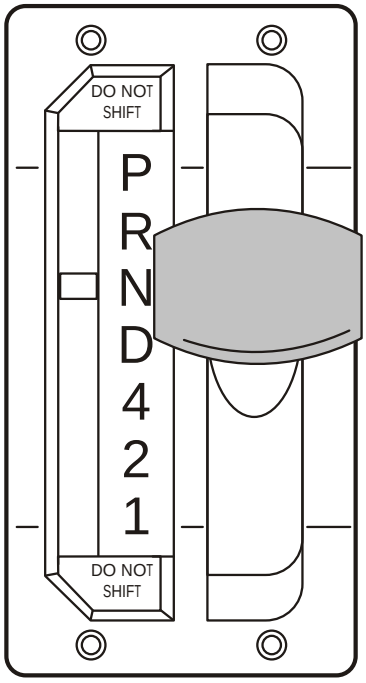

Copyright © 2000 ATSG

Figure 4

ALL 1000 AND 2400 SERIES

Shift Selector Position	Gears Available	Shift Selector Position	Gears Available	Shift Selector Position	Gears Available
P (Park)	Neutral*	P (Park)	Neutral*	P (Park)	Neutral*
R (Reverse)	Reverse	R (Reverse)	Reverse	R (Reverse)	Reverse
N (Neutral)	Neutral	N (Neutral)	Neutral	N (Neutral)	Neutral
D (Drive)	1-5	D (Drive)	1-5	D (Drive)	1-5 (1-4)**
4 (Fourth)	1-4	4 (Fourth)	1-4	3 (Third)	1-3
3 (Third)	1-3	2 (Second)	1-2	2 (Second)	1-2
1 (First)	1st	1 (First)	1st	1 (First)	1st

* With Park Pawl Engaged
** 4 Speed Calibration or Trailering Mode

ALL 2000 SERIES "WITH" AUTO-APPLY PARKING BRAKE

Shift Selector Position	Gears Available	Shift Selector Position	Gears Available	Shift Selector Position	Gears Available
PB = (Park)	Neutral*	PB = (Park)	Neutral*	PB = (Park)	Neutral*
R (Reverse)	Reverse	R (Reverse)	Reverse	R (Reverse)	Reverse
N (Neutral)	Neutral	N (Neutral)	Neutral	N (Neutral)	Neutral
D (Drive)	1-5	D (Drive)	1-5	D (Drive)	1-5 (1-4)**
4 (Fourth)	1-4	4 (Fourth)	1-4	3 (Third)	1-3
3 (Third)	1-3	2 (Second)	1-2	2 (Second)	1-2
1 (First)	1st	1 (First)	1st	1 (First)	1st

* With Auto-Apply Parking Brake Engaged
** 4 Speed Calibration or Trailering Mode
PB = Auto-Apply Parking Brake

ALL 2000 SERIES "WITHOUT" AUTO-APPLY PARKING BRAKE

Shift Selector Position	Gears Available	Shift Selector Position	Gears Available	Shift Selector Position	Gears Available
R (Reverse)	Reverse	R (Reverse)	Reverse	R (Reverse)	Reverse
N (Neutral)	Neutral	N (Neutral)	Neutral	N (Neutral)	Neutral
D (Drive)	1-5	D (Drive)	1-5	D (Drive)	1-5 (1-4)**
4 (Fourth)	1-4	4 (Fourth)	1-4	3 (Third)	1-3
3 (Third)	1-3	2 (Second)	1-2	2 (Second)	1-2
1 (First)	1st	1 (First)	1st	1 (First)	1st

** 4 Speed Calibration or Trailering Mode

Copyright © 2000 ATSG

Figure 5

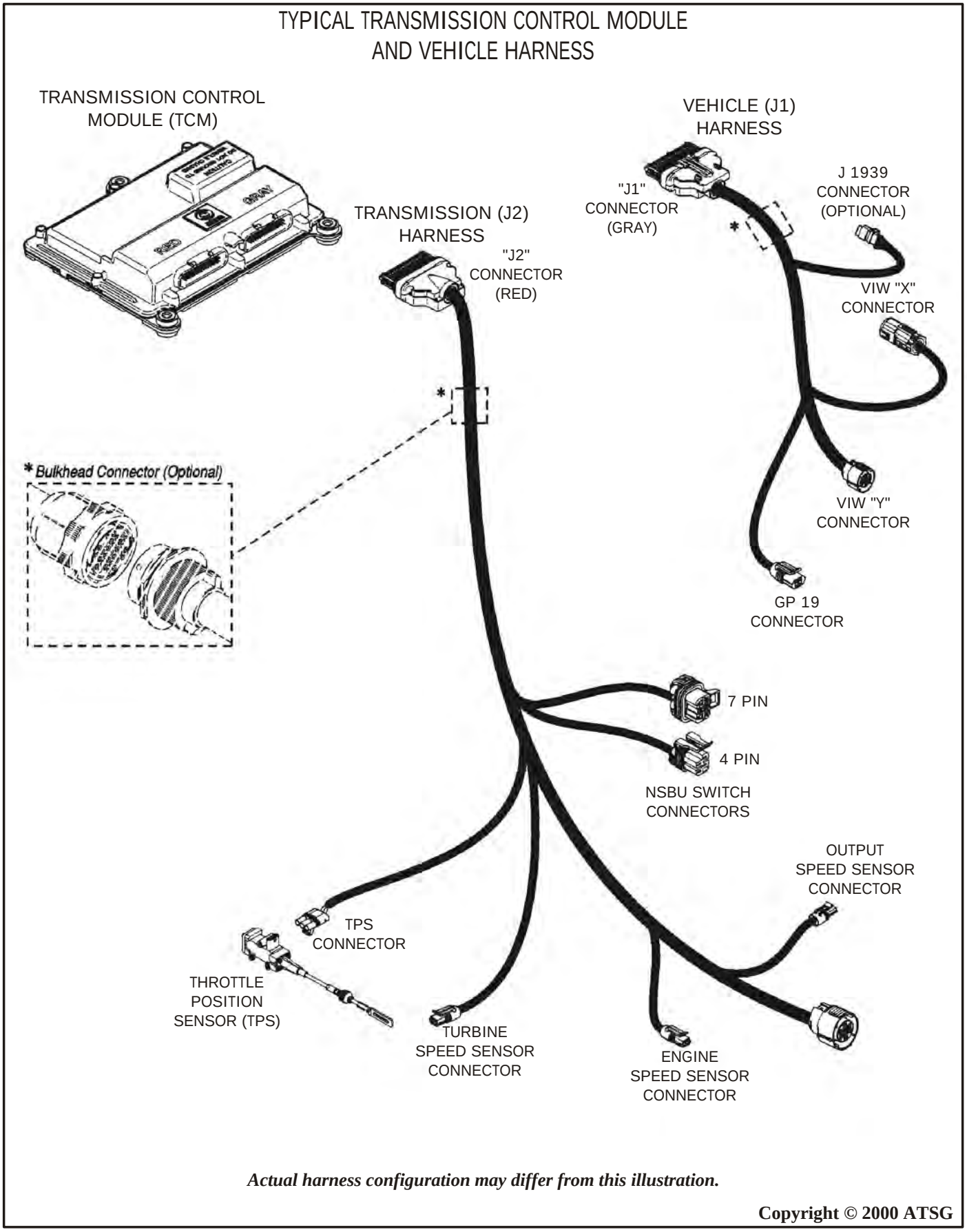

Actual harness configuration may differ from this illustration.

Copyright © 2000 ATSG

Figure 6

ELECTRICAL OPERATION

The electronic control of the transmission is performed by the Transmission Control Module (TCM). Transmissin Control Modules are available in both 12V and 24V configurations, to match the configuration of the vehicle electrical system.

The TCM, shown in Figure 6, recieves and processes signals from various switches and sensors. The TCM determines shift sequences, shift timing, and clutch apply and release pressures. The TCM uses this information to control solenoids and valves, supply system status, and provide diagnostic information for service technicians.

EXTERNAL COMPONENTS

SPEED SENSORS

The speed sensors are variable reluctance devices which convert mechanical motion to an AC voltage. Each sensor consists of a wire coil wrapped around a pole piece that is adjacent to a permanent magnet. These elements are contained in a housing which is mounted adjacent to a rotating ferrous member, such as a gear tooth. Two signal wires extend from one end of the housing and an exposed end of the pole piece is at the opposite end of the housing. As a ferrous object, such as a gear tooth approaches and passes through the gap at the end of the pole piece, an AC voltage pulse is induced in the wire coil. The TCM calculates the frequency of these AC pulses and converts it to a speed value. The AC voltage generated varies from 150mV at low speed to 15V at high speed. The signal wires from the sensor are formed as twisted pairs to cancel magnetically induced fields. The cable is also shielded to protect from voltage-related fields. The typical speed sensor is shown in Figure 7. Noise from other sources is eliminated by using two-wire differential inputs at the TCM.

ENGINE SPEED SENSOR

The Engine Speed Sensor is externally mounted in the torque converter housing, and directed at the ribs protruding from the torque converter as shown in Figure 1.

TURBINE SPEED SENSOR

The Turbine Speed Sensor is externally mounted in the main transmission case, and directed at the tone wheel or PTO drive gear attached to the C1/C2 clutch housing as shown in Figure 1.

OUTPUT SPEED SENSOR

The Output Speed Sensor is externally mounted in the extension housing and directed at the teeth of a tone wheel splined to and rotating with the output shaft as shown in Figure 1.

TYPICAL SPEED SENSOR

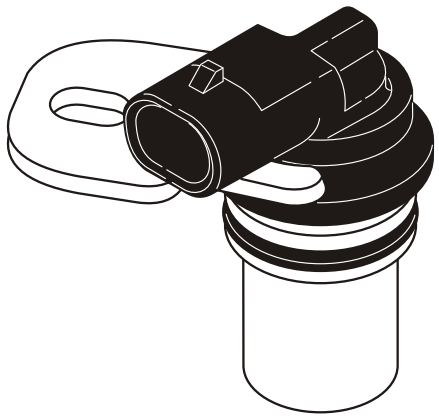

Copyright © 2000 ATSG

Figure 7

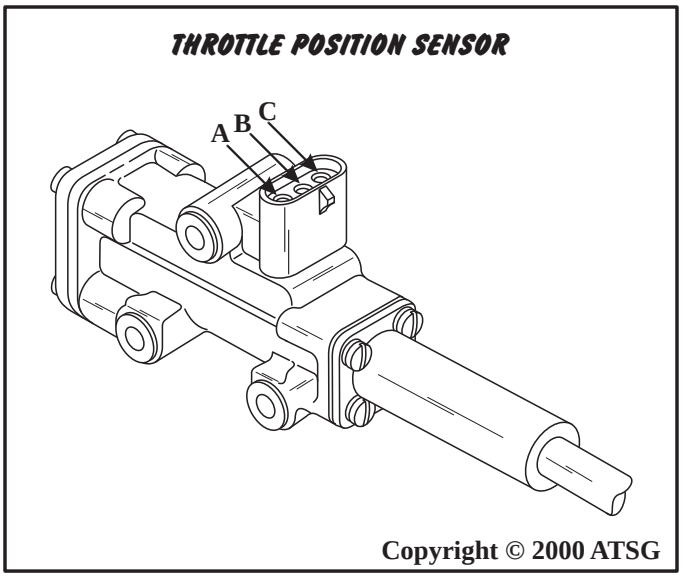

Figure 8

THROTTLE POSITION SENSOR

The Throttle Position Sensor (TPS) can be mounted to the engine, chassis, or transmission. The TPS contains a pull actuation cable and a potentiometer. One end of the cable is attached to the throttle lever and the other end, inside a protective housing, to the potentiometer. Output voltage from the TPS is directed to the Transmission Control Module (TCM) through the external harness. The voltage signal will vary and indicates the throttle position and in combination with other input data will determine shift timing. Refer to the chart provided in Figure 10 for approximate voltages at various throttle openings. It is basically the same as most current GM models with 0.5 volts at idle, to 5.0 volts at wide open throttle.

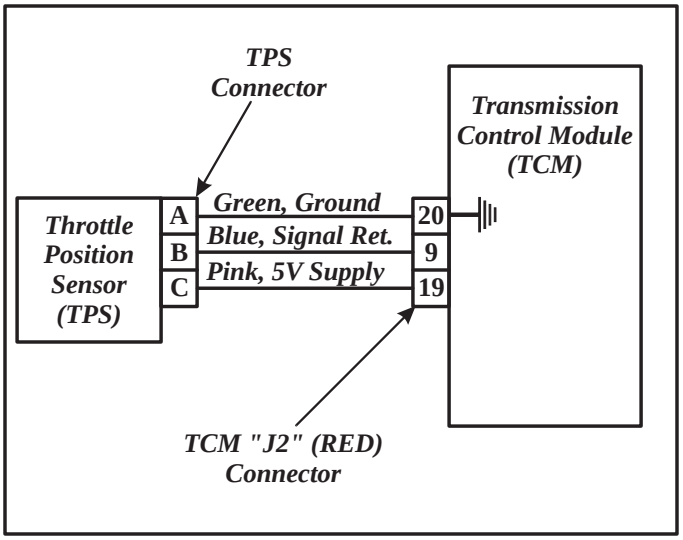

Figure 9

(TPS) Distance of Travel Versus Volts	
mm/inch	Volts
0/0	0
1/.039"	0.11
2/.079"	0.22
3/.118"	0.33
4/.157"	0.44
5/.197"	0.55
6/.236"	0.66
7/.275"	0.77
8/.314"	0.88
9/.354"	0.99
10/.394"	1.10
11/.433"	1.20
12/.472"	1.30
13/.511"	1.43
14/.551"	1.54
15/.590"	1.65
16/.629"	1.76
17/.669"	1.87
18/.708"	1.98
19/.748"	2.08
20/.787"	2.19
21/.826"	2.30
22/.866"	2.41
23/.905"	2.52
24/.945"	2.63
25/.984"	2.74
26/1.023"	2.85
27/1.063"	2.96
28/1.102"	3.07
29/1.142"	3.18
30/1.181"	3.29
31/1.220"	3.40
32/1.260"	3.51
33/1.299"	3.62
34/1.339"	3.73
35/1.378"	3.84
36/1.417"	3.95
37/1.457"	4.06
38/1.496"	4.17
39/1.535"	4.28
40/1.575"	4.39
41/1.614"	4.50
42/1.654"	4.61
43/1.693"	4.72
44/1.732"	4.83
45/1.772"	4.94
46/1.811"	5.05

Figure 10

NEUTRAL START BACK-UP SWITCH

The installation of a transmission mounted Neutral Start/ Reverse Signal switch is required. This switch commonly refered to as an "NSBU Switch", mounts directly onto the transmission case from the outside and detects the angular position of the manual shift selector shaft. This position is relayed to the TCM so that certain vehicle control functions can be coordinated with the position of the shift controls. The NSBU Switch has redundant circuitry to alert the TCM in the event of a single wire or switch failure. The switch is interfaced to the starter circuit, and the reverse signal provision may be used to activate vehicle back-up lights and/or reverse warning devices.
Refer to Figures 11 and 12.

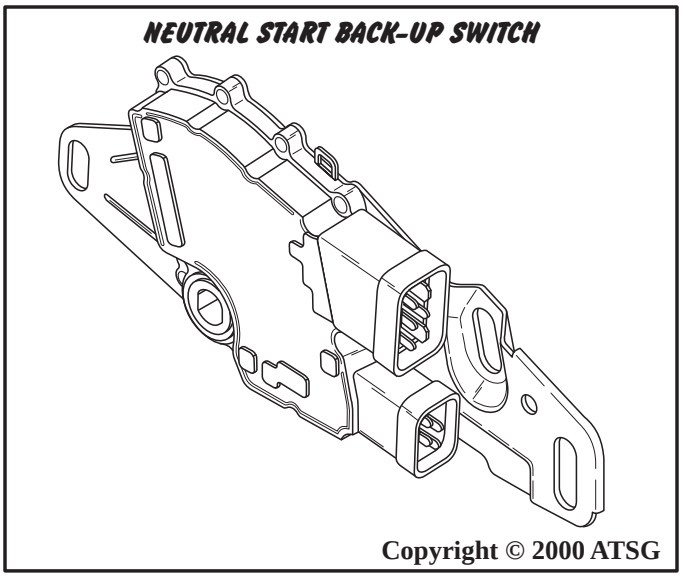

Figure 11

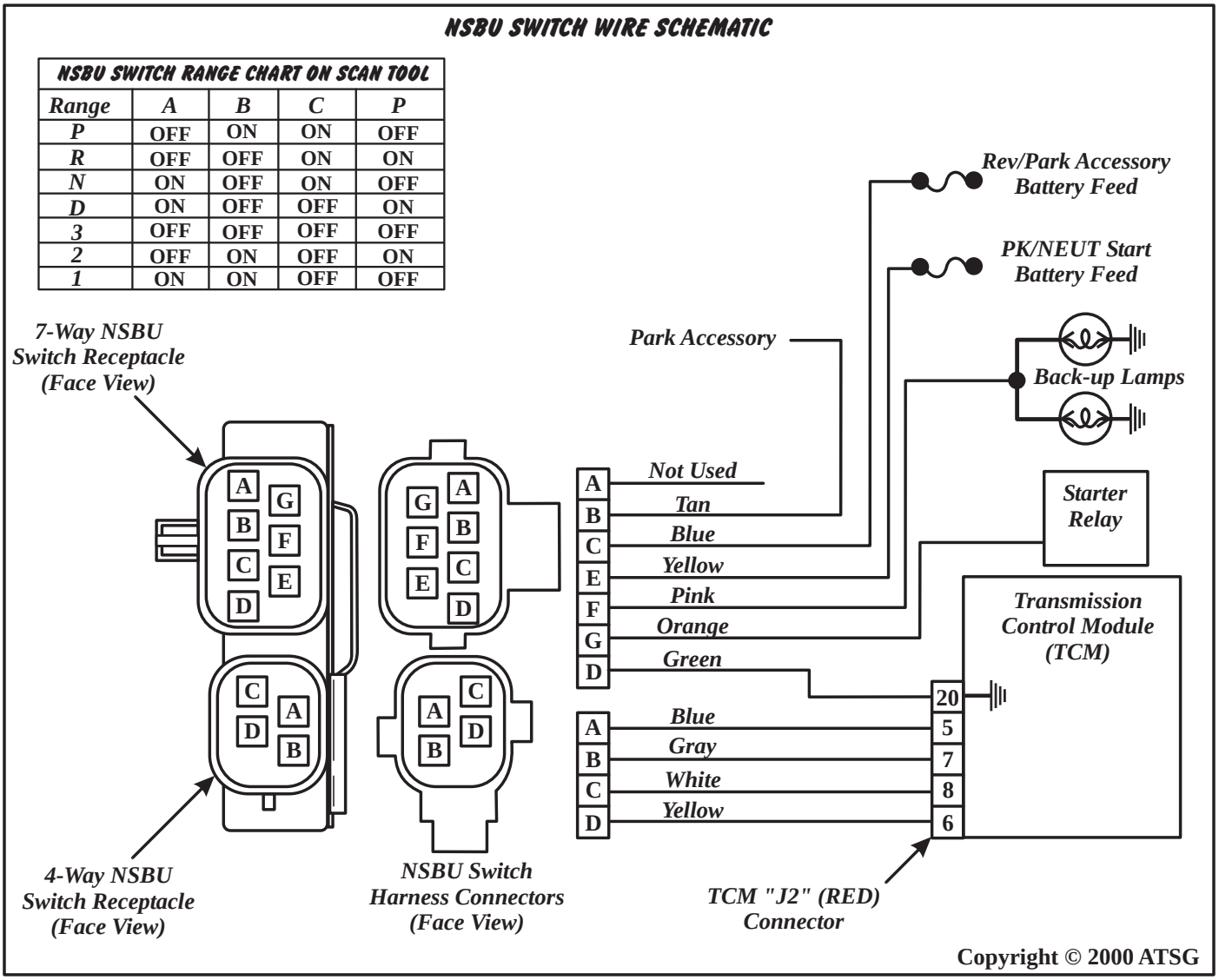

NSBU SWITCH RANGE CHART ON SCAN TOOL

Range	A	B	C	P
P	OFF	ON	ON	OFF
R	OFF	OFF	ON	ON
N	ON	OFF	ON	OFF
D	ON	OFF	OFF	ON
3	OFF	OFF	OFF	OFF
2	OFF	ON	OFF	ON
1	ON	ON	OFF	OFF

Figure 12

https://truckmanualshub.com/

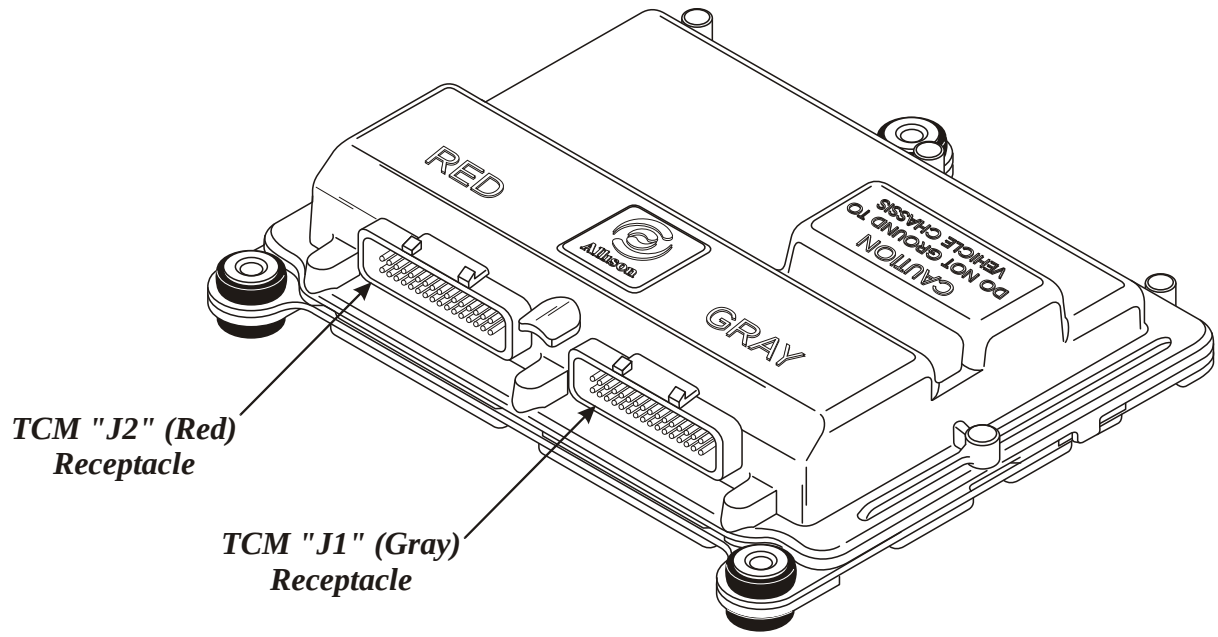

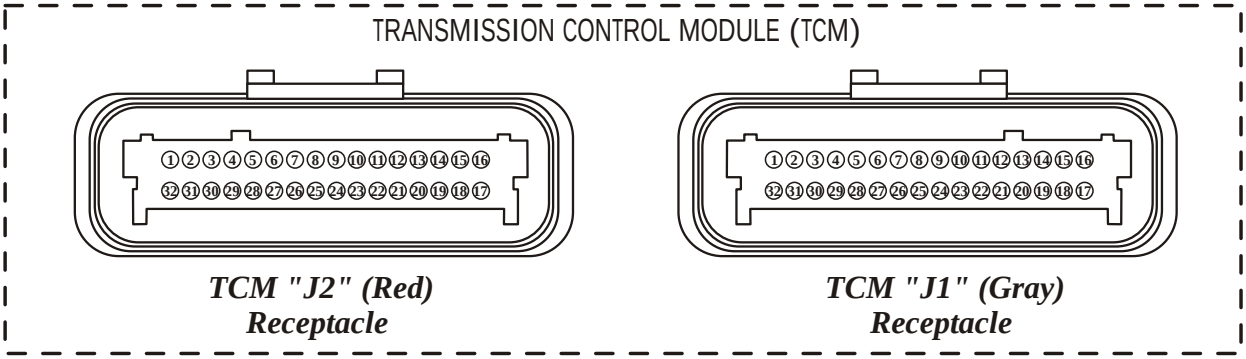

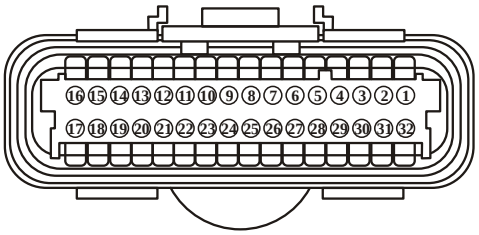

TCM "J2" (Red)
Harness Connector
(Face View)

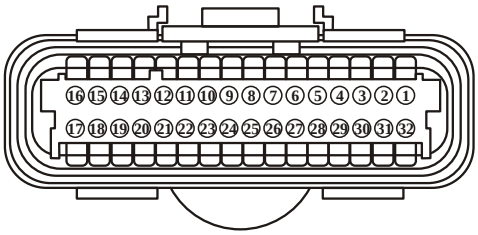

TCM "J1" (Gray)
Harness Connector
(Face View)

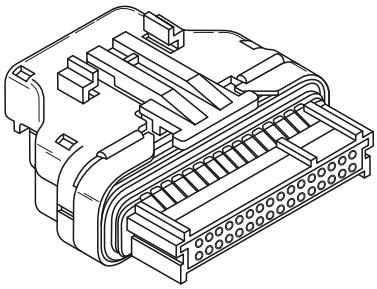

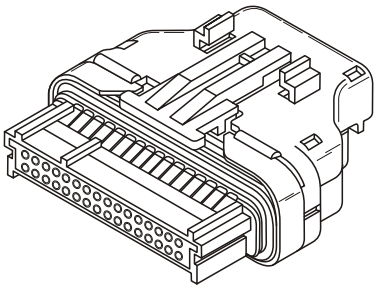

Copyright © 2000 ATSG

Figure 13

TCM CONNECTOR PIN IDENTIFICATION CHART

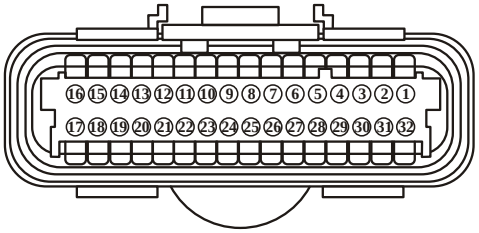

TCM "J2" (Red) Harness Connector (Face View)

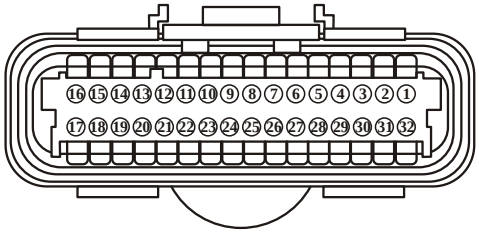

TCM "J1" (Gray) Harness Connector (Face View)

Term.	Color	Circuit Function	Circuit Ends
1	Blue	PSA Input	Trans-D
2	Pink	PSA Input	Trans-F
3	White	PSA Input	Trans-E
4	Green	PSA Input	Trans-K
5	Blue	NSBU Input	NSBU-4A
6	Yellow	NSBU Input	NSBU-4D
7	Gray	NSBU Input	NSBU-4B
8	White	NSBU Input	NSBU-4C
9	Blue	Throttle Position Sensor	TPS-B
10	Tan	Trans Sump Temp Input	Trans-G
11	Orange	Retarder Temp Input (Opt)	R Temp-A
12	Blue	Engine Coolant Temp	ECTS-A
13	Orange	Turbine Speed Sensor (High)	TSS-A
14	Blue	Turbine Speed Sensor (Low)	TSS-B
15	Yellow	Output Speed Sensor (High)	OSS-A
16	Green	Output Speed Sensor (Low)	OSS-B
17	Tan	Engine Speed Sensor (High)	ESS-A
18	Orange	Engine Speed Sensor (Low)	ESS-B
19	Pink	TPS Voltage Supply	TPS-C
20	Green	Analog Ground	Trans-H, ECTS-A, Temp-B, NSBU-7D R-Temp-B, TPS-A
21	Yellow	TRANS ID	Trans-T
22	Yellow	Trim Solenoid A (High)	Trans-L
23	White	Trim Solenoid A (Low)	Trans-M
24	Pink	Trim Solenoid B (High)	Trans-N
25	Orange	Trim Solenoid B (Low)	Trans-P
26	Green	C Solenoid Ground (On/Off)	Trans-A
27	Blue	D Solenoid Ground (On/Off)	Trans-B
28	Gray	E Solenoid Ground (On/Off)	Trans-W
29	White	F Solenoid Low (PWM)	Trans-J
30	Orange	G Solenoid Low (PWM)(Opt)	Trans-J
31	Tan	C, D, E Solenoid V Supply	Trans-C
32	Green	F Solenoid High (PWM)	Trans-S

Term.	Color	Circuit Function	Circuit Ends
1	Gray	Battery Ground	Vehicle System
2	Yellow	Ignition Power	Vehicle System
3	Pink	Battery Power	Vehicle System
4	Yellow	Ignition Power	Vehicle System
5	Gray	Battery Ground	Vehicle System
6	Blue	GPI 1	Vehicle System
7	Orange	GPI 2	Vehicle System
8	Green	GPI 3	Vehicle System
9	White	GPI 4	Vehicle System
10	Yellow	GPI 5	Vehicle System
11	Green	GPI 6	Vehicle System
12	Blue	GPI 7	Vehicle System
13	Pink	GPI 8	Vehicle System
14	Orange	GPI 9	Vehicle System
15	Yellow	Retarder Mod. Reg. (Opt)	RMR-B
16	White	PWM Throttle	Vehicle System
17	Pink	Sensor Power	RMR-C
18	Green	Analog Ground	RMR-A
19	Tan	GPO 1	Vehicle System
20	Orange	GPO 2	Vehicle System
21	White	GPO 3	Vehicle System
22	Blue	GPO 4	Vehicle System
23	Pink	Range Inhibit Indicator	Vehicle System
24	White	GPO 6	Vehicle System
25	Green	CHECK TRANS	Vehicle System
26	Tan	Vehicle Speed	Vehicle System
27	Pink	Vehicle Speed	Vehicle System
28	Yellow	Digital Ground	Vehicle System
29	Red	CAN High	J 1939 A or H
30	Blue	ISO 9141	Vehicle System
31	Green	CAN Shield	J 1939 C or S
32	Black	CAN Low	J 1939 B or L

Copyright © 2000 ATSG

Figure 14

https://truckmanualshub.com/

DIAGNOSTIC TROUBLE CODE (DTC) CHART		
DTC	Description	"Check Trans" Light
P0117	Engine Coolant Temperature Circuit Low Voltage (High Temperature)	NO
P0118	Engine Coolant Temperature Circuit High Voltage (Low Temperature)	NO
P0121	Throttle Position Sensor Performance Problem	NO
P0122	Throttle Position Sensor Circuit Low Voltage	NO
P0123	Throttle Position Sensor Circuit High Voltage	NO
P0218	Transmission Fluid Over Temperature	NO
P0561	Urealistic variations in vehicle system voltage	YES
P0562	System Voltage Low	YES
P0563	System Voltage High	YES
P0602	TCM Not Programmed	YES
P0606	Transmission Control Module Internal Performance	NO
P0700	MIL Illumination requested	YES
P0703	Brake Switch Circuit	YES
P0705	Transmission Range Sensor Circuit (PRNDL Input)	YES
P0706	Transmission Range Sensor Circuit Performance	YES
P0708	Transmission Range Sensor Circuit High Input	YES
P0711	Transmission Fluid Temperature Circuit Performance	YES
P0712	Transmission Fluid Temperature Circuit Low Voltage (High Temperature)	YES
P0713	Transmission Fluid Temperature Circuit High Voltage (Low Temperature)	YES
P0716	Turbine Speed Sensor Circuit Performance	YES
P0717	Turbine Speed Sensor Circuit No Signal	YES
P0721	Output Speed Sensor Circuit Performance	YES
P0722	Output Speed Sensor Circuit No Signal	YES
P0726	Engine Speed Sensor Circuit Performance	YES
P0727	Engine Speed Sensor Circuit No Signal	YES
P0731	Incorrect 1st Gear Ratio	YES
P0732	Incorrect 2nd Gear Ratio	YES
P0733	Incorrect 3rd Gear Ratio	YES
P0734	Incorrect 4th Gear Ratio	YES
P0735	Incorrect 5th Gear Ratio	YES
P0736	Incorrect Reverse Gear Ratio	YES
P0741	Torque Converter Clutch System Stuck Off	YES
P0742	Torque Converter Clutch System Stuck On	YES
P0742	Torque Converter Clutch Solenoid Electrical	YES
P0746	Solenoid A controlled Clutch Stuck Off	YES
P0747	Solenoid A controlled Clutch Stuck On	YES
P0748	Pressure Control Trim Solenoid "A" Electrical	YES
P0763	Shift Solenoid "C" Electrical	YES
P0768	Shift Solenoid "D" Electrical	YES
P0773	Shift Solenoid "E" Electrical	YES
P0776	Solenoid B controlled Clutch Stuck Off	YES
P0777	Solenoid B controlled Clutch Stuck On	YES

Figure 15

Copyright © 2000 ATSG

DIAGNOSTIC TROUBLE CODE (DTC) CHART

DTC	Description	"Check Trans" Light
P0778	Pressure Control Trim Solenoid "B" Electrical	YES
P0836	4 Wheel Drive Low Switch Circuit Malfunction (may also be listed as P1875)	YES
P0840	Transmission Pressure Switch, Solenoid C Circuit	YES
P0841	Transmission Pressure Switch, Solenoid C Circuit Stuck Open	YES
P0842	Transmission Pressure Switch, Solenoid C Circuit Stuck Closed	YES
P0843	Transmission Pressure Switch, Solenoid C Circuit High	YES
P0845	Transmission Pressure Switch, Solenoid D Circuit	YES
P0846	Transmission Pressure Switch, Solenoid D Circuit Stuck Open	YES
P0847	Transmission Pressure Switch, Solenoid D Circuit Stuck Closed	YES
P0848	Transmission Pressure Switch, Solenoid D Circuit High	YES
P0870	Transmission Pressure Switch, Solenoid E Circuit High	YES
P0871	Transmission Pressure Switch, Solenoid E Circuit Stuck Open	YES
P0872	Transmission Pressure Switch, Solenoid E Circuit Stuck Closed	YES
P0873	Transmission Pressure Switch, Solenoid E Circuit High	YES
P0875	Reverse Pressure Switch Malfunction	YES
P0876	Reverse Pressure Switch Circuit Stuck Open	YES
P0880	TCM Power Input Signal	YES
P1688	Unmanaged Engine Torque Delivered To TCM	YES
P1709	Transmission Pressure Switch, Solenoid E Circuit	YES
P1710	Transmission Pressure Switch, Solenoid E Circuit Stuck Open	YES
P1711	Transmission Pressure Switch, Solenoid E Circuit Stuck Closed	YES
P1712	Transmission Pressure Switch, Solenoid E Circuit High	YES
P1713	Transmission Pressure Switch, Reverse Circuit	YES
P1714	Transmission Pressure Switch, Reverse Circuit Stuck Open	YES
P1715	Transmission Pressure Switch, Reverse Circuit Stuck Closed	YES
P1716	Transmission Pressure Switch, Reverse Circuit High	YES
P1720	Trim Solenoid "A" Controlled Clutch Not Engaged	YES
P1721	Trim Solenoid "B" Controlled Clutch Not Engaged	YES
P1723	Trim Solenoid "A" Controlled Clutch Not Engaged	YES
P1724	Trim Solenoid "B" Controlled Clutch Not Engaged	YES
P1726	Shift Solenoid "D" Controlled Clutch Not Engaged	YES
P1727	Shift Solenoid "E" Controlled Clutch Not Engaged	YES
P1760	TCM Supply Voltage	NO
P1779	Engine Torque Delivered to TCM	NO
P1835	Kickdown Circuit	YES
P1860	TCC (PWM) Solenoid Circuit-Electrical	YES
P1891	Throttle Position Sensor Clutch PWM Signal Low Input	NO
P1892	Throttle Position Sensor Clutch PWM Signal High Input	NO
U1016	Class 2 Powertrain Controller State Of Health	NO
U1300	Serial Data Communication Link Low (Class 2)	NO
U1301	Serial Data Communication Link High (Class 2)	NO
U2105	CAN Bus Error ECM	NO

Copyright © 2000 ATSG

Figure 16

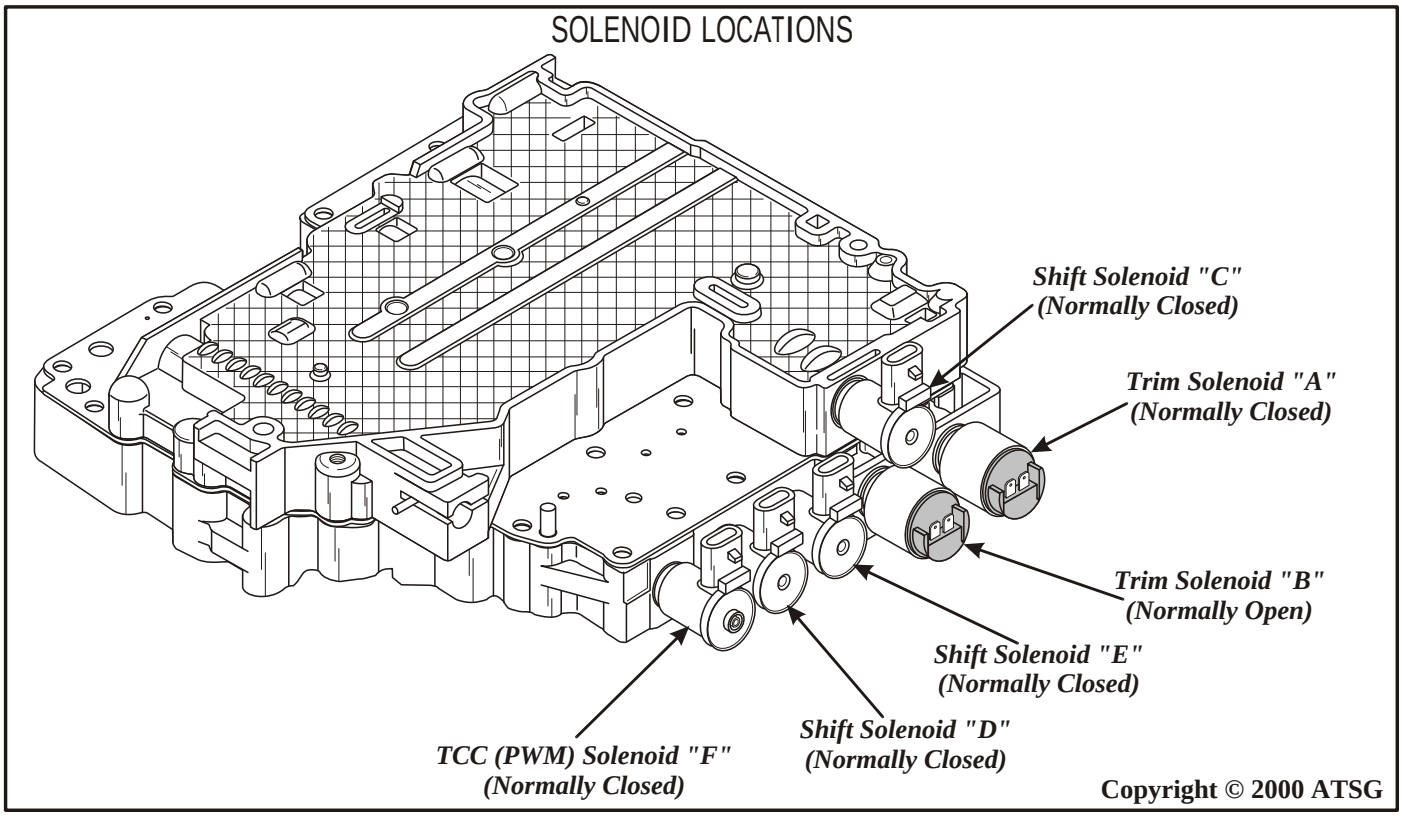

Figure 17

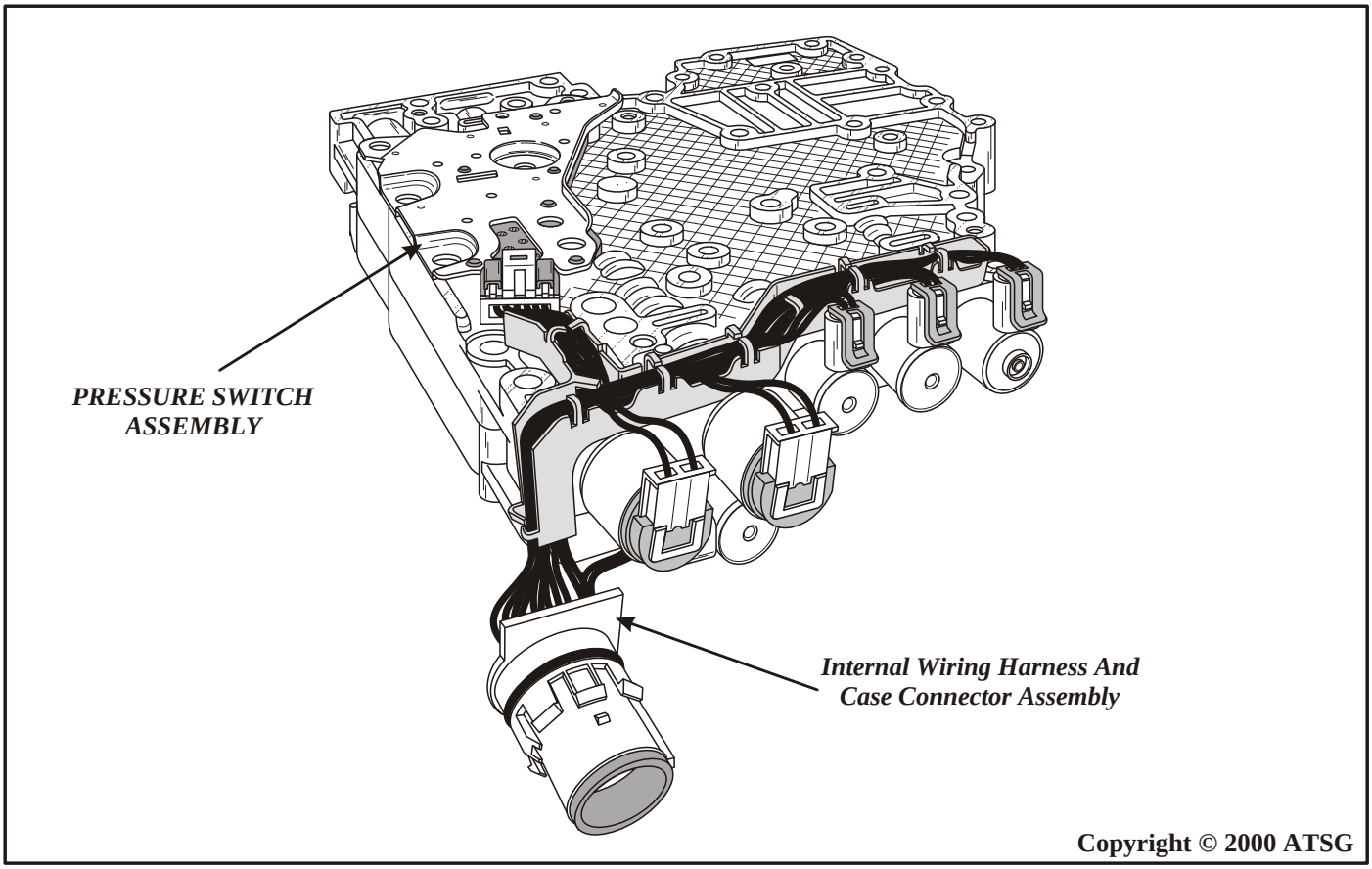

Figure 18

https://truckmanualshub.com/

INTERNAL COMPONENTS

Several components of the 1000/2000/2400 Series electrical control system are located inside of the transmission as part of the main control valve body. These components include three different types of solenoids for controlling the hydraulic action of the valves in the valve body, and the pressure switch assembly. An internal wiring harness and case connector assembly links the internal components with the Transmission Control Module.

SOLENOIDS

The 1000/2000/2400 Series solenoid locations are shown in Figure 17. The solenoids may be normally closed or normally open. A normally closed solenoid remains closed until a signal from the TCM energizes the solenoid. A normally open solenoid remains open until the TCM energizes the solenoid.

TCC (PWM) Solenoid F - This solenoid a normally closed, pulse width modulated, and operates at a frequency of 100 Hz (cycles per second) during a shift. The percentage of time the voltage is ON during each 100th of a second is called the ***solenoid duty cycle.***

INTERNAL WIRING HARNESS ASSEMBLY

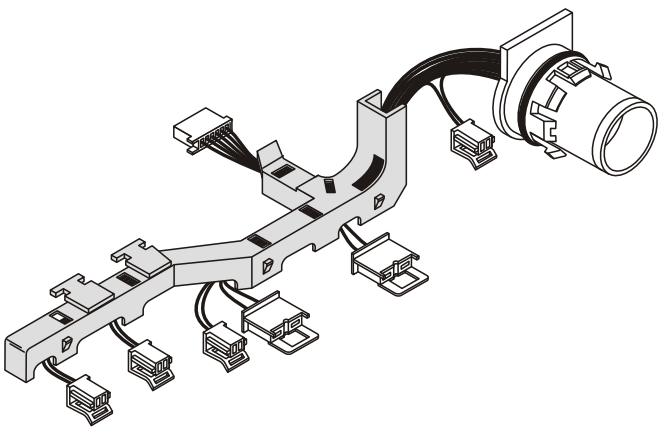

Serviced as an assembly under Allison Part Number 15321154.

Copyright © 2000 ATSG

Figure 19

A 100 percent duty cycle indicates a maximum signal to the solenoid. A zero percent duty signal indicates a minimum or no signal to the solenoid. The TCM, using pulse width modulation programming, varies the percentage of voltage ON time during a cycle. As the pulse width, or duty cycle is increased, the solenoid is ON longer.

Shift Solenoids C, D, E - Shift Solenoids C, D, & E are normally closed solenoids that provide the necessary logic to distribute fluid to the correct clutch packs in the transmission. The shift solenoids provide either full control line pressure, or exhaust, to the lands of each of the corresponding Shift Valves C, D, and E. Shift Solenoids C, D, and E may operate in the open or closed state with no modulation capability at all.

Trim Solenoids A and B - Trim Solenoid A and B are used to control oncoming, off-going, and holding pressure to the five clutch packs. These solenoids are reffered to as Pressure Proportional to Current (PPC) solenoids, since the output hydraulic pressure supplied by these solenoids is proportional to the current commanded. Trim Solenoids A and B operate using a frequency of 1000 Hz. The current causes a force on the armature and shaft assembly, which is balanced by fluid pressure acting on the end of the shaft. The trim solenoids operate using battery voltage. Trim Solenoid A is a Normally Closed solenoid, providing 86 psi (590 kpa) at zero current, and no trim pressure at full current. Trim Solenoid A allows for limp-home capability in the event of a power or TCM failure. Trim Solenoid B is a Normally Open solenoid, and prrovides zero pressure at zero current.

INTERNAL WIRING HARNESS

The Internal Wiring Harness Assembly connects the shift solenoids, clutch trim solenoids, torque converter clutch solenoid, pressure switch assembly and temperature sensor to the external harness that leads to the Transmission Control Module. Refer to Figure 18 and 19. Figure 20 on Page 18 gives you an internal wire schematic for all of the internal components, and pin identification for the external transmission case connector

Continued on Page 18.

INTERNAL WIRING SCHEMATIC

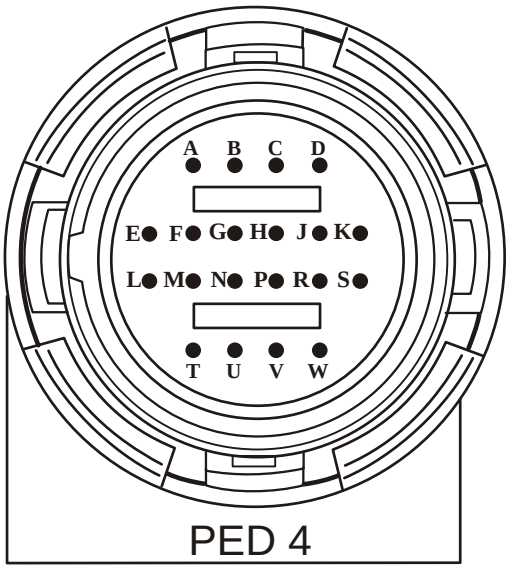

TRANSMISSION EXTERNAL CONNECTOR FACE VIEW

Solenoid	*Terminals*	*Resistance In Ohms @ 72°F*
TRIM "A"	L and M	5.5 - 8.0 W
TRIM "B"	N and P	5.5 - 8.0 W
SHIFT "C"	C and A	20 -30 W
SHIFT "D"	C and B	20 -30 W
SHIFT "E"	C and W	20 -30 W
TCC "F"	J and S	8 - 15 W
TEMP SENSOR	H and G	2.8K W @ 72° F

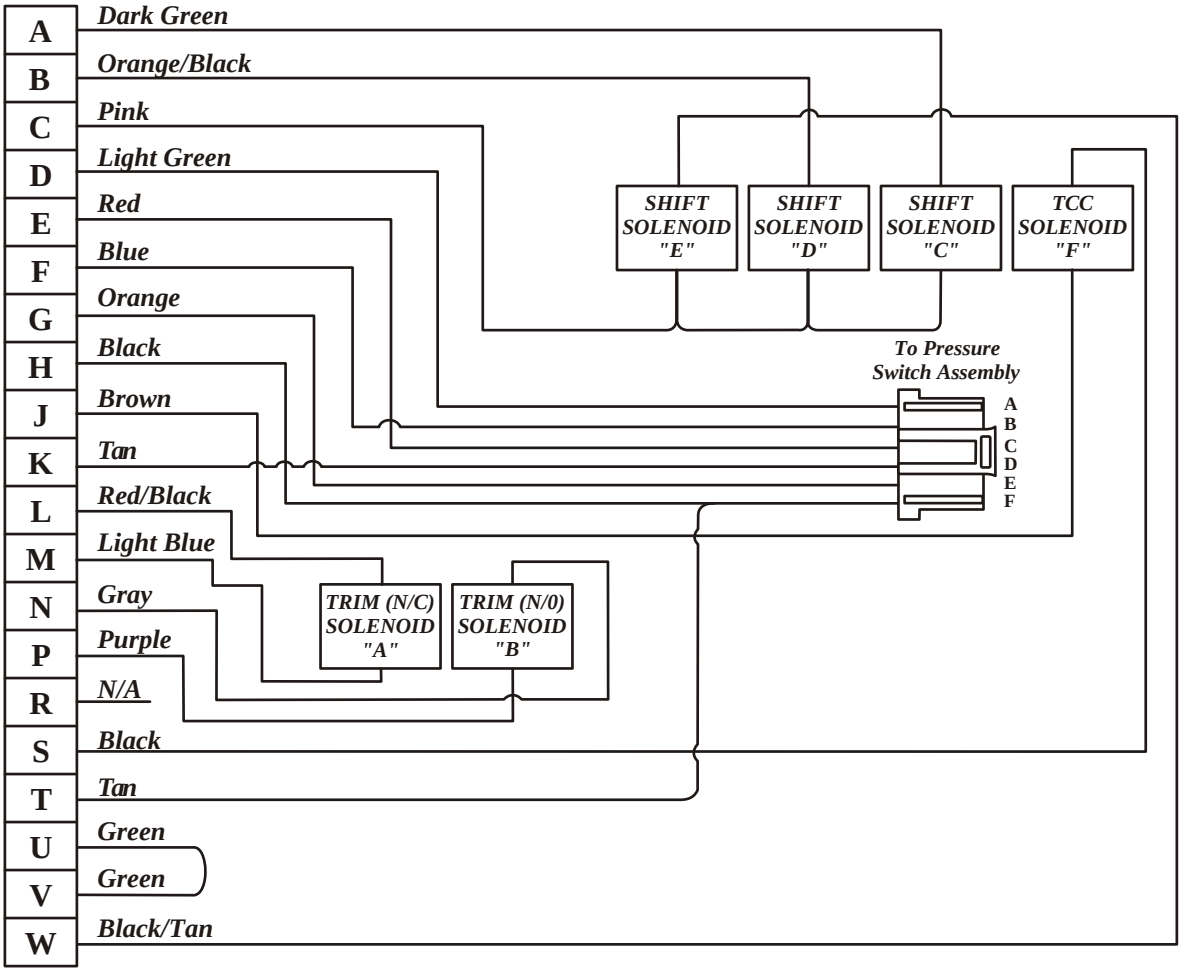

Copyright © 2000 ATSG

Figure 20

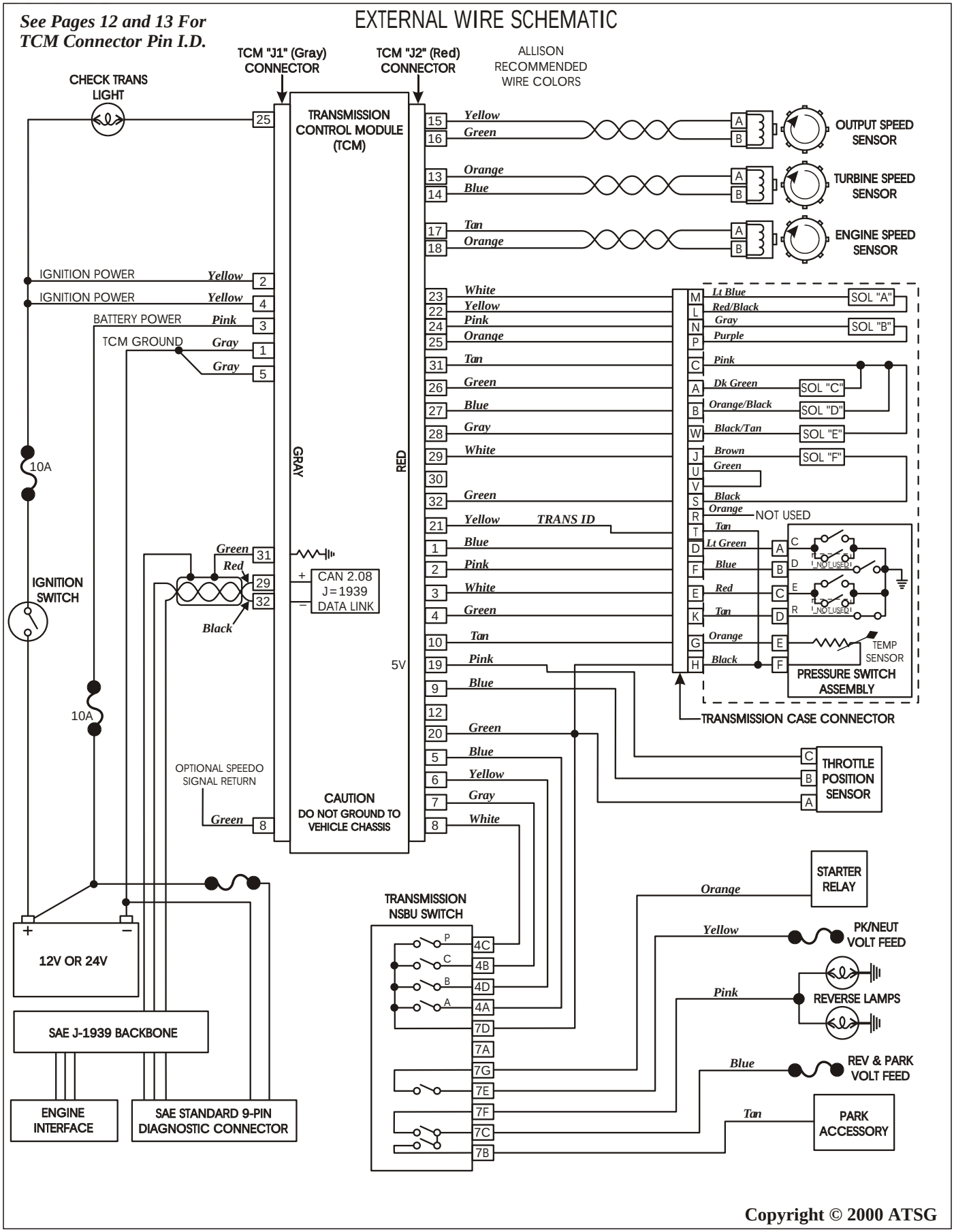
See Pages 12 and 13 For TCM Connector Pin I.D.
EXTERNAL WIRE SCHEMATIC
TCM "J1" (Gray) CONNECTOR
TCM "J2" (Red) CONNECTOR
ALLISON RECOMMENDED WIRE COLORS
CHECK TRANS LIGHT
TRANSMISSION CONTROL MODULE (TCM)
OUTPUT SPEED SENSOR
TURBINE SPEED SENSOR
ENGINE SPEED SENSOR
IGNITION POWER
BATTERY POWER
TCM GROUND
10A
IGNITION SWITCH
GRAY
RED
CAN 2.08 J=1939 DATA LINK
5V
TRANS ID
NOT USED
SOL "A"
SOL "B"
SOL "C"
SOL "D"
SOL "E"
SOL "F"
TEMP SENSOR
PRESSURE SWITCH ASSEMBLY
TRANSMISSION CASE CONNECTOR
THROTTLE POSITION SENSOR
OPTIONAL SPEEDO SIGNAL RETURN
CAUTION
DO NOT GROUND TO VEHICLE CHASSIS
12V OR 24V
TRANSMISSION NSBU SWITCH
STARTER RELAY
PK/NEUT VOLT FEED
REVERSE LAMPS
REV & PARK VOLT FEED
PARK ACCESSORY
SAE J-1939 BACKBONE
ENGINE INTERFACE
SAE STANDARD 9-PIN DIAGNOSTIC CONNECTOR
Copyright © 2000 ATSG

Figure 21

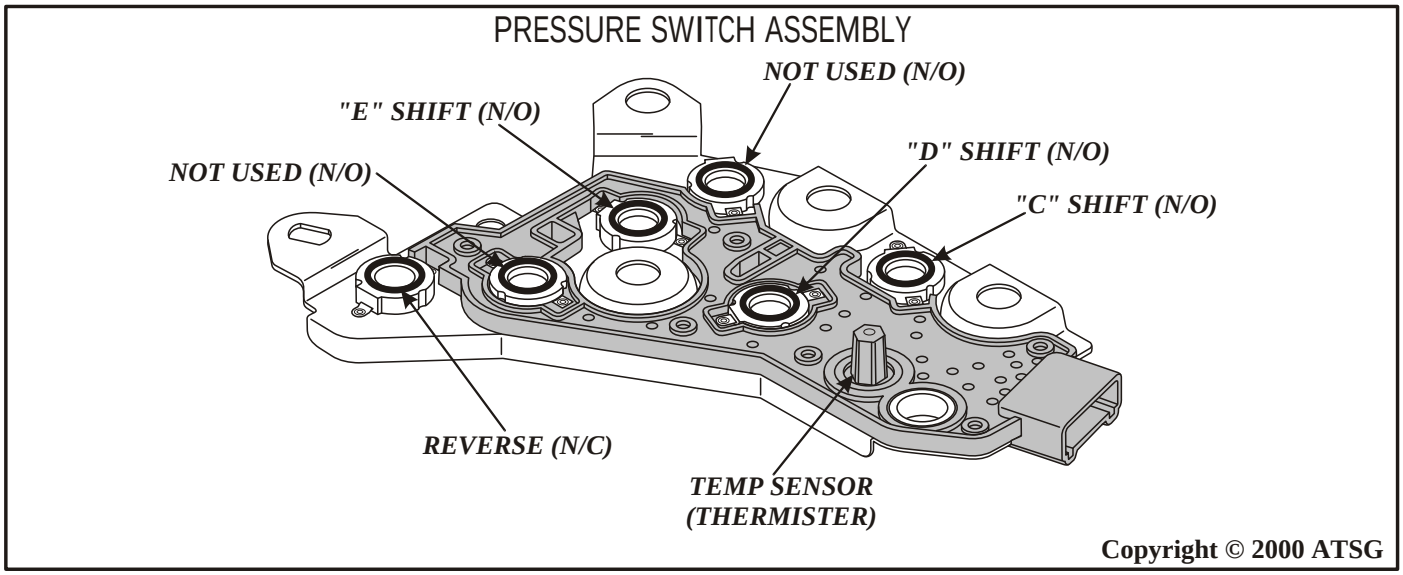

Figure 22

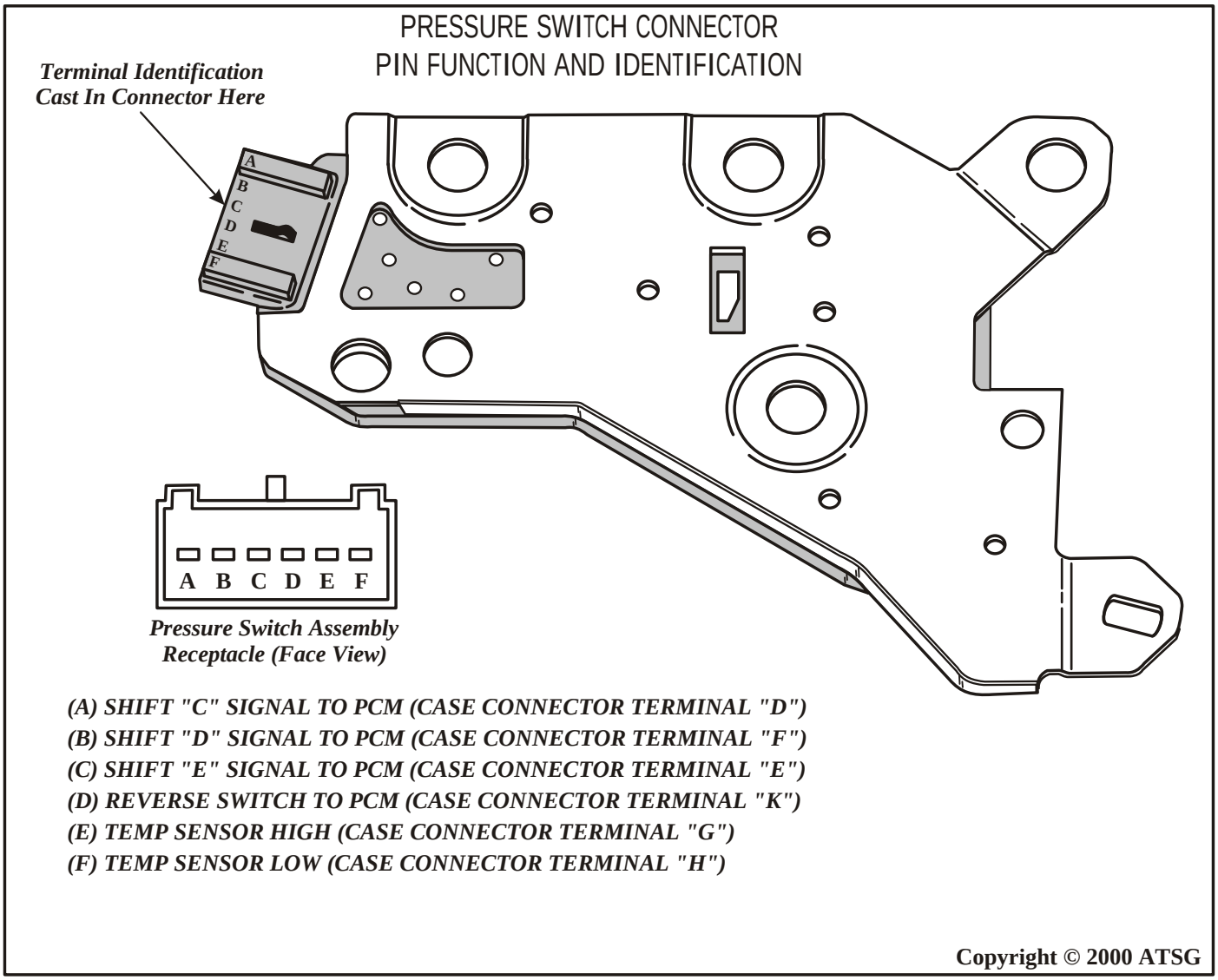

Figure 23

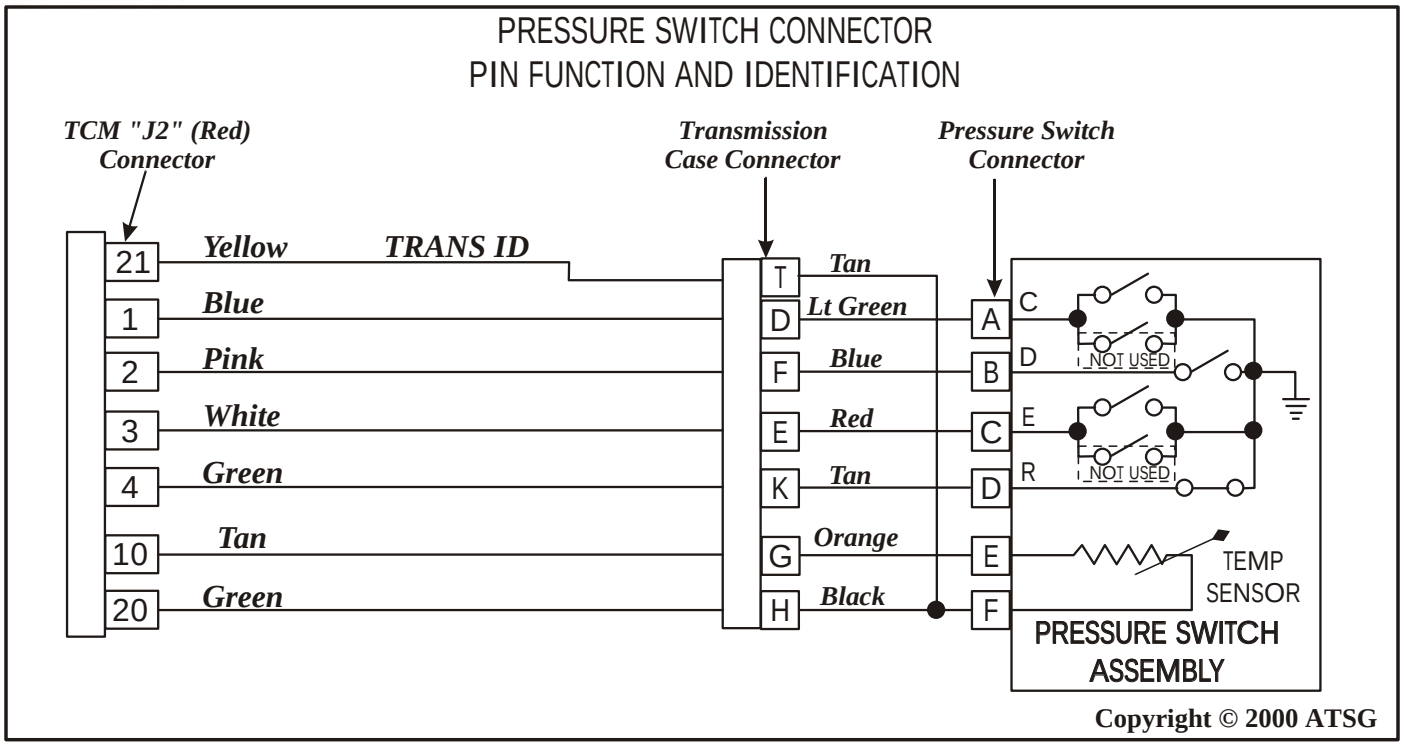

Figure 24

PRESSURE SWITCH ASSEMBLY

The Pressure Switch Assembly (PSA) is made up of three normally open switches and one normally closed switch. There are also 2 additional switches in the PSA that are not used. All switches and their locations are identified in Figure 22. Fluid pressure is fed from shift valves C, D, and E to C, D, and E switches, and from the manual valve to the reverse switch. This logic indicates the current transmission operating range to the TCM.

The three pressure switches corresponding to the shift valves are normally open (N/O) when there is no pressure to the switch, so that electrical current is stopped at the switch. When pressure is routed to the switch from the shift valves, the switch closes and allows current to flow from the positive contact and through the switch. Refer to Figure 24.

The pressure switch corresponding to reverse is a normally closed (N/C) switch, and pressure is fed to the switch when the transmission is placed into the reverse position.

The Pressure Switch Assembly also contains the temperature sensor (thermister) to notify the TCM of the current sump temperature. Changes in fluid temperature are indicated by changes in sensor resistance. Increasing temperature will create decreased sensor resistance.

The PSA terminal identification and functions are illustrated in Figure 23 to assist in switch diagnosis. There is also a complete wiring schematic from the Pressure Switch Assembly through the transmission case connector and to the TCM shown in Figure 24. We have also provided a pressure switch logic state chart in Figure 25.

Pressure Switch Logic State Chart				
Range	***"C"***	***"D"***	***"E"***	***Reverse***
Park	***On***	***On***	***On***	***Off***
Rev	***On***	***On***	***On***	***On***
Neut	***On***	***On***	***On***	***Off***
OD	***Off***	***Off***	***On***	***Off***
4	***On***	***Off***	***On***	***Off***
3	***On***	***Off***	***Off***	***Off***
2	***Off***	***Off***	***Off***	***Off***
1	***Off***	***On***	***Off***	***Off***

Figure 25

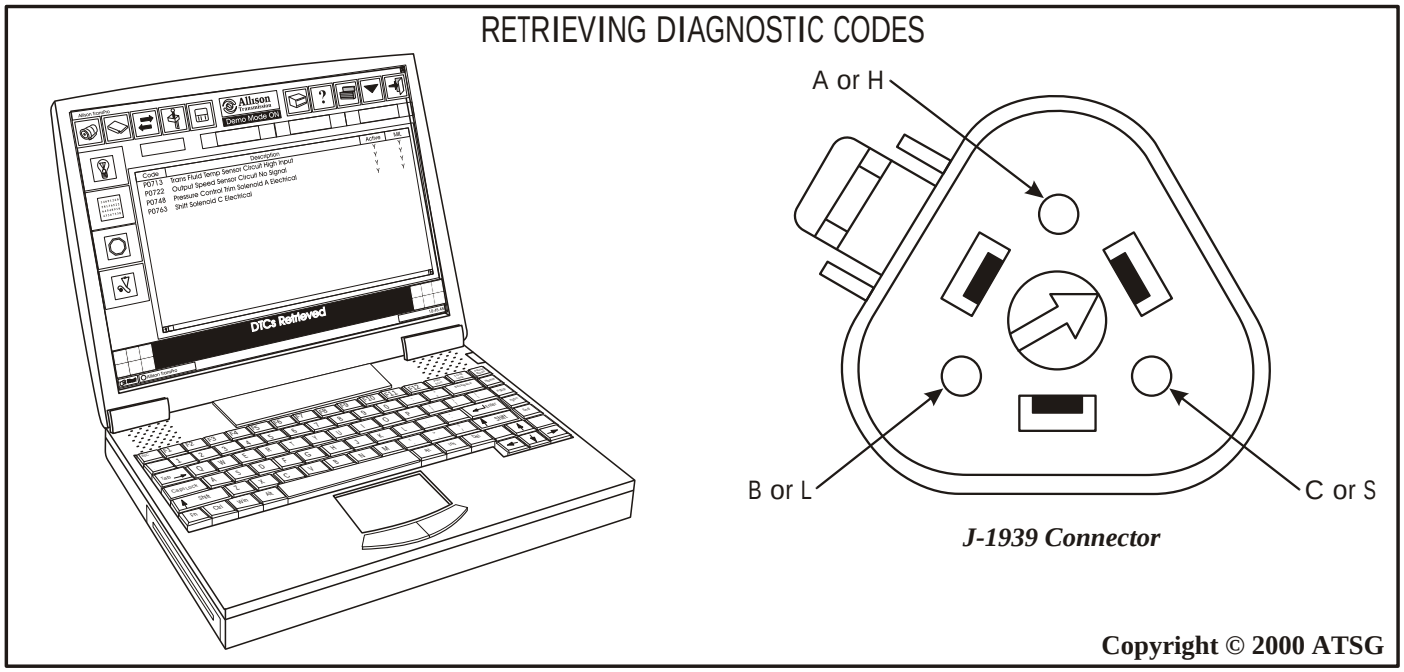

Figure 26

CHECK TRANS LIGHT

The electronic control system is programmed to inform the operator of any type problem with the transmission system and automatically take action to protect the operator, vehicle and transmission. To do this, the TCM turns on the ***Check Trans*** light on the instrument panel, which will notify the operator that a Diagnostic Trouble Code (DTC) has been stored in the TCMs memory.

Each time the engine is started, the ***Check Trans*** light will illuminate momentarily and then go off after a few seconds. This momentary lighting is to ensure that the ***Check Trans*** light circuit is working properly. Illumination of the ***Check Trans*** light at any time after start-up, indicates that the TCM has stored a DTC, or the TCM is not working properly. Anytime the ***Check Trans*** light is on, upshifts and downshifts will be restricted and direction changes may not occur. The converter clutch is also shut off when transmission shifting is restricted.

If power is interrupted while the transmission is operating in a forward range, the default positions of the shift valves and solenoids will enable application of two clutches to maintain forward range operation (Either 3 or 5th). If power is interrupted while the transmission is operating in **R**(Reverse) or **N**(Neutral), the transmission defaults to or continues Neutral operation untill a key cycle.

The operator may turn off and restart the engine, and the manual selector lever will provide reverse when in R, Neutral when in P/N, and 3rd Gear when in any forward range, regardless of the range where the failure occured.

RETRIEVING DIAGNOSTIC CODES

Currently you must use PC Tool Software called TransPro® which is available through Kent-Moore Heavy-Duty Division, and must be loaded onto a Windows 95/98 Lap-Top PC as shown in Figure 26. The TransPro® software transmits and recieves data to and from the TCM via the J-1939 connector, as shown in Figure 26, processes the data, and displays the appropriate information on the screen.

The use of TransPro® is describeded in detail in the instruction manual that is furnished with each set of software. We have provided you with a typical screen, that is utilized in the TransPro® software, for retrieving DTCs in Figure 27.

Hopefully aftermarket scanner manufacturers will be able to provide us with a cartridge for the more popular scanners in the future.

https://truckmanualshub.com/

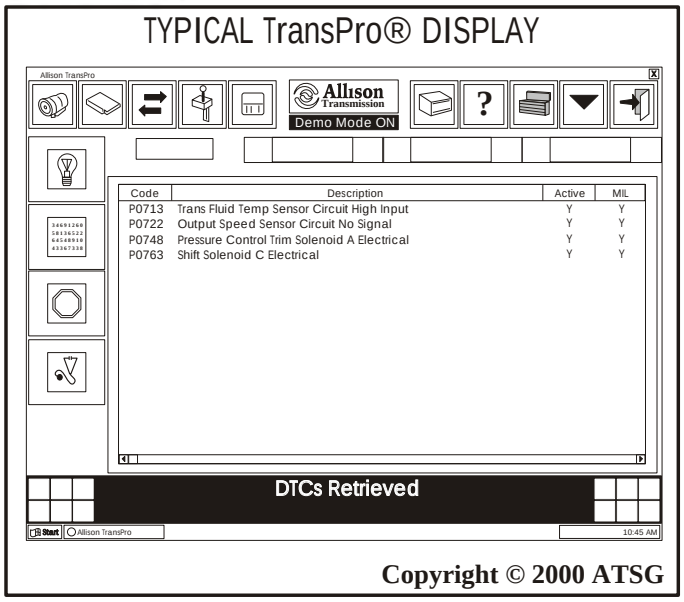

Figure 27

LINE PRESSURE TEST

Check transmission fluid level. All transmission fluid level and pressure checks ***must*** be made at normal operating temperatures (160-200°F).

Connect a 0-300 psi oil pressure guage to the main pressure tap as illustrated in Figure 28, and compare readings with the pressure chart in Figure 28.

Take precautions against vehicle movement during the pressure tests, and use a guage with an extended line so that it can be read from inside the vehicle.

MAIN PRESSURE TAP LOCATION AND SPECIFICATIONS

MAIN PRESSURE TEST SPECIFICATIONS

Range	Pressure @ 600 RPM	Pressure @ 1200 RPM
PARK/NEUTRAL	900-1655 kpa (130-240 psi)	1515-1795 kpa (220-260 psi)
REVERSE	800-1380 kpa (115-200 psi)	1515-1795 kpa (220-260 psi)
FORWARD (TCC Off)	800-1380 kpa (115-200 psi)	1515-1795 kpa (220-260 psi)
FORWARD (TCC On)		1000-1170 kpa (145-170 psi)

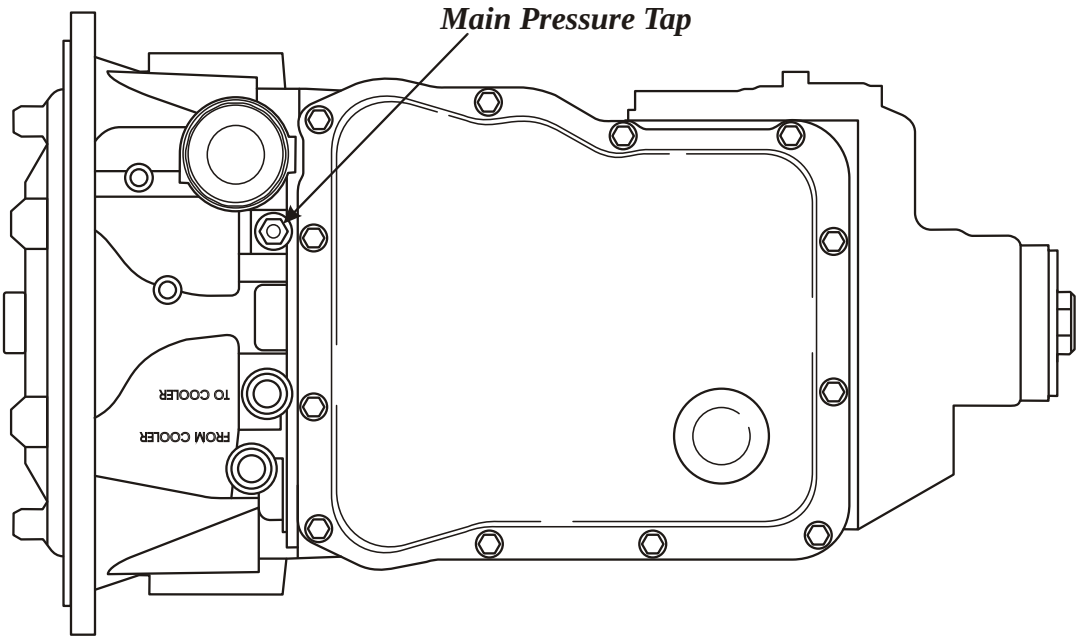

Figure 28

https://truckmanualshub.com/

BELL HOUSING OIL PASSAGE IDENTIFICATION

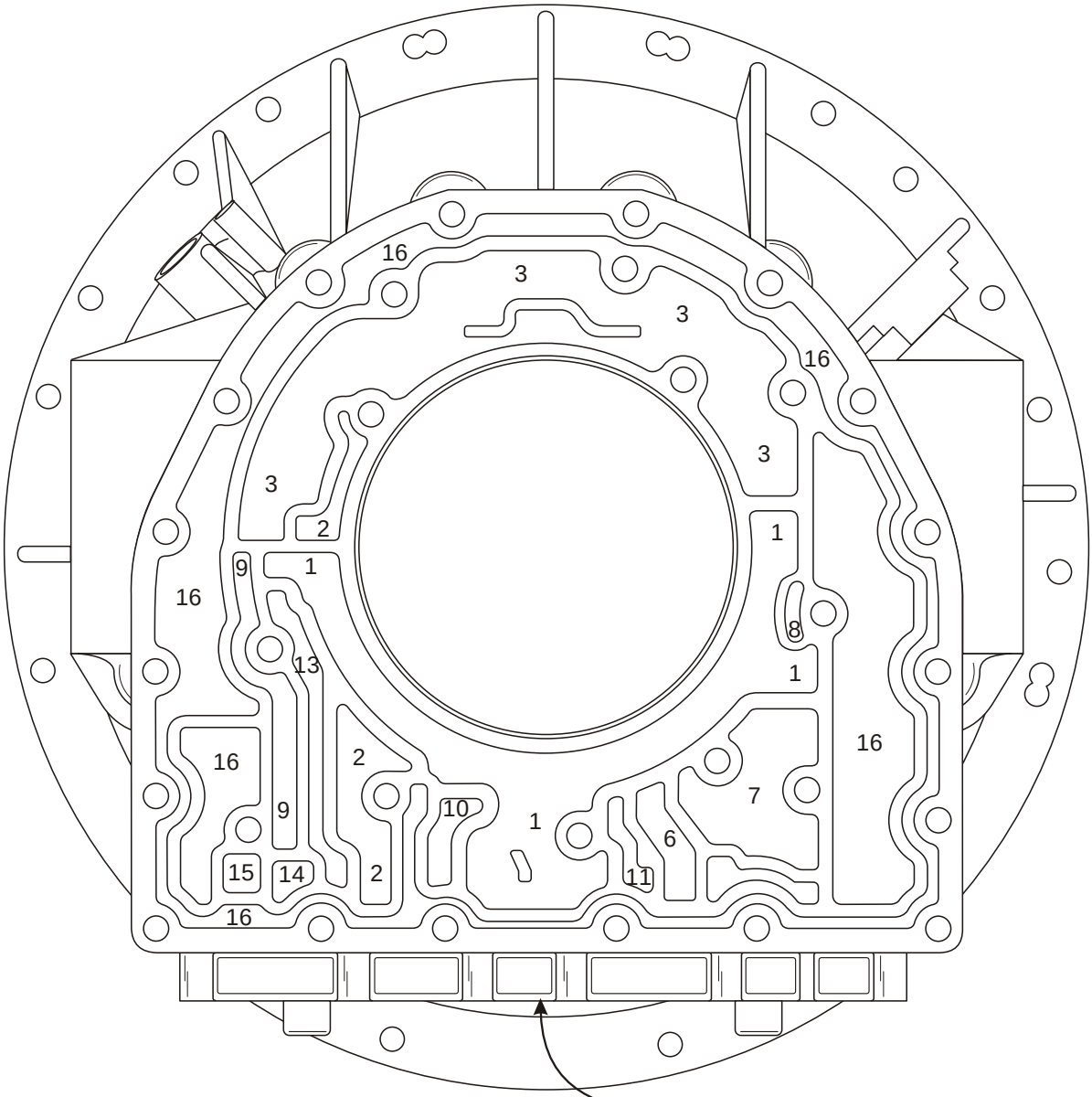

1. PUMP SUCTION
2. LINE PRESSURE
3. OVERAGE (CONV RELEASE)
4. CONVERTER IN
5. CONVERTER OUT
6. TO COOLER
7. FROM COOLER
8. LUBE OIL
9. LOCK-UP APPLY
10. C1 CLUTCH
11. C2 CLUTCH
12. LOCK-UP SIGNAL
13. CUT-BACK (5TH GEAR)
14. LINE - TO FILTER
15. LINE - FROM FILTER
16. EXHAUST

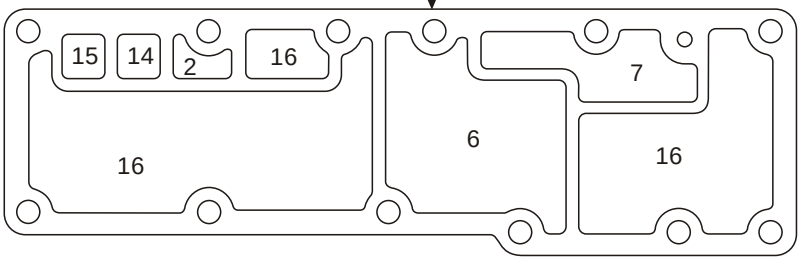

BOTTOM BELL HOUSING COOLER MANIFOLD SURFACE

Copyright © 2000 ATSG

Figure 29

https://truckmanualshub.com/

PUMP COVER SPACER PLATE OIL PASSAGE I.D.

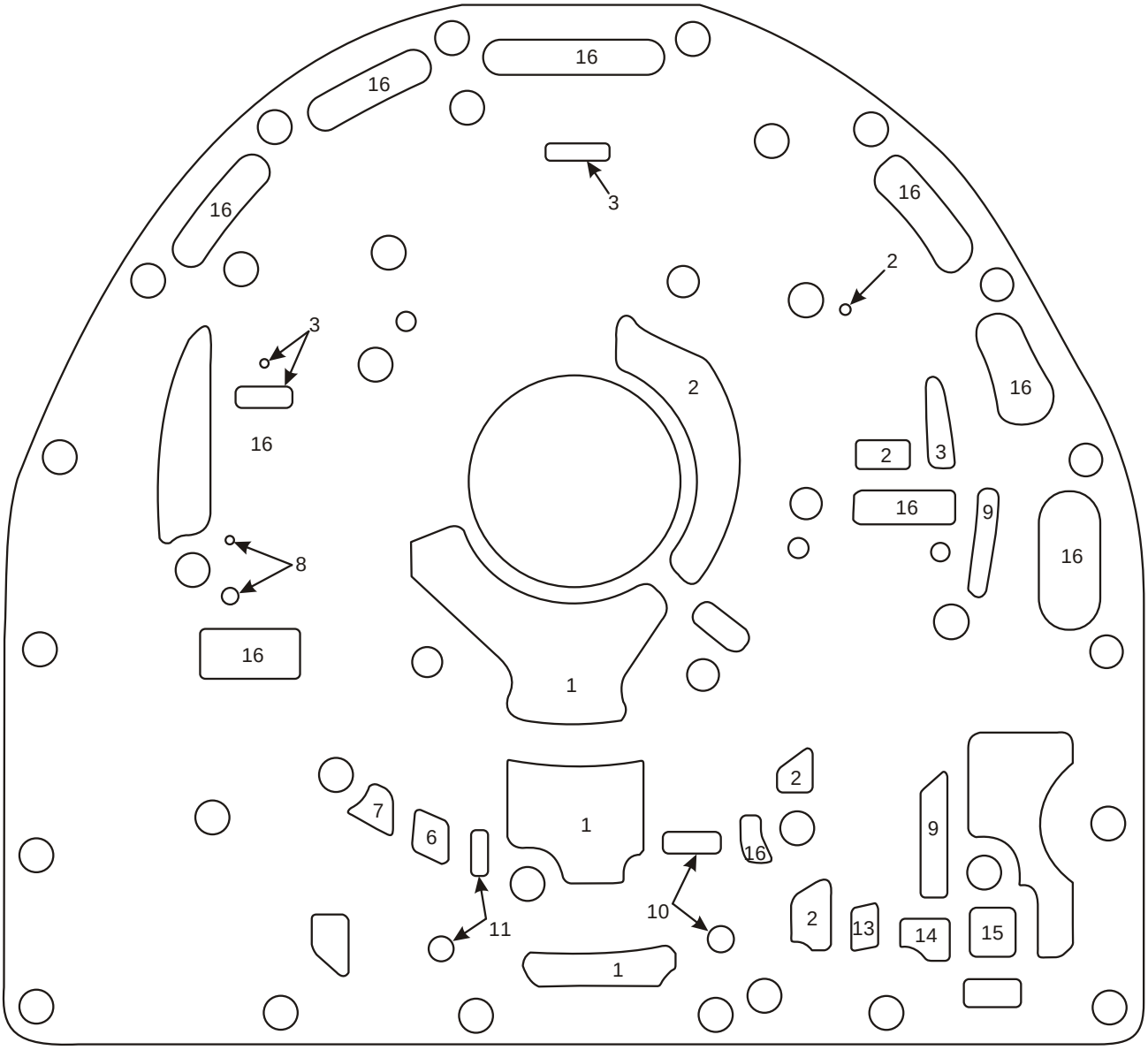

1. PUMP SUCTION
2. LINE PRESSURE
3. OVERAGE (CONV RELEASE)
4. CONVERTER IN
5. CONVERTER OUT
6. TO COOLER
7. FROM COOLER
8. LUBE OIL
9. LOCK-UP APPLY
10. C1 CLUTCH
11. C2 CLUTCH
12. LOCK-UP SIGNAL
13. CUT-BACK (5TH GEAR)
14. LINE - TO FILTER
15. LINE - FROM FILTER
16. EXHAUST

Copyright © 2000 ATSG

Figure 30

MAIN CASE "FRONT" PASSAGE I.D.

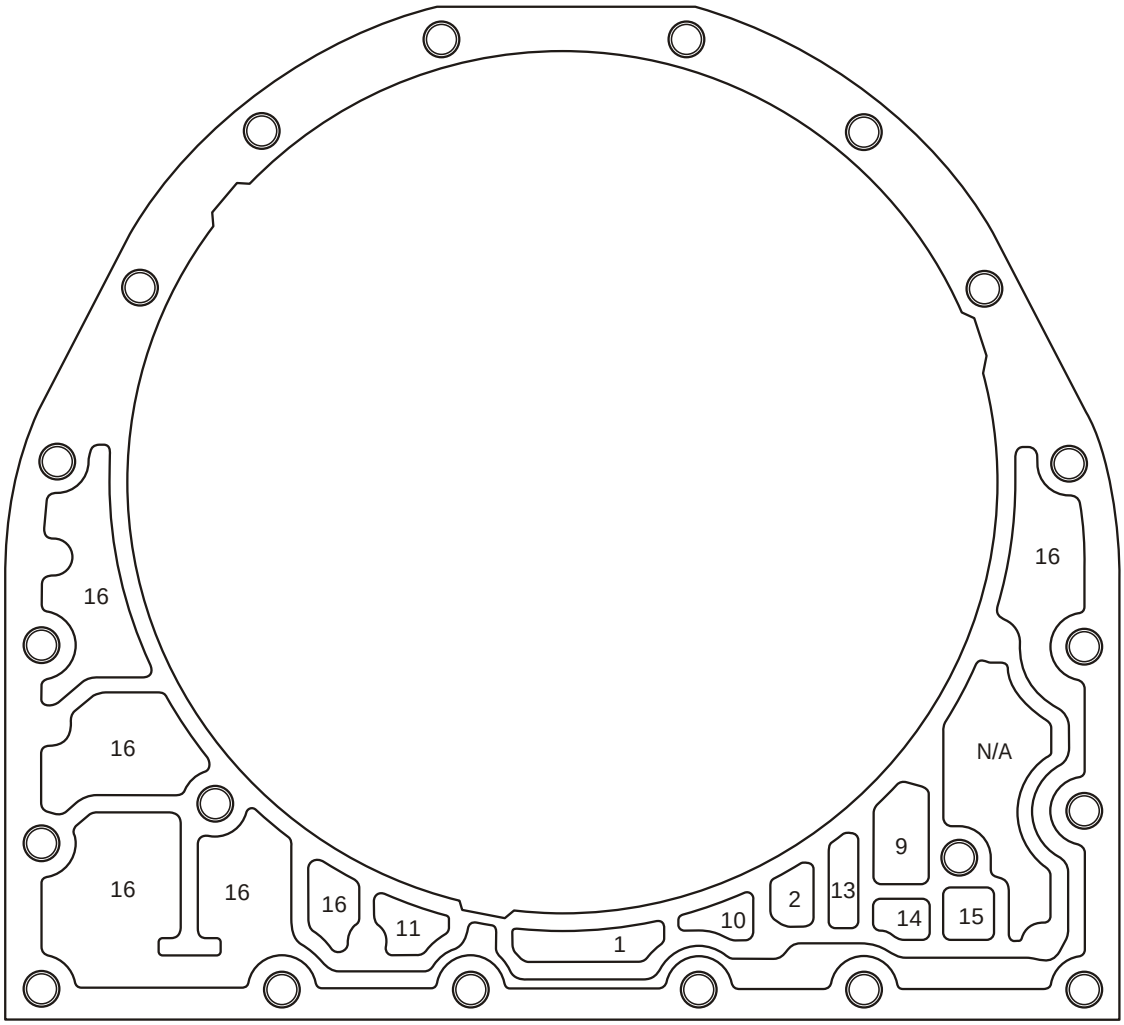

1. PUMP SUCTION
2. LINE PRESSURE
3. OVERAGE (CONV RELEASE)
4. CONVERTER IN
5. CONVERTER OUT
6. TO COOLER
7. FROM COOLER
8. LUBE OIL
9. LOCK-UP APPLY
10. C1 CLUTCH
11. C2 CLUTCH
12. LOCK-UP SIGNAL
13. CUT-BACK (5TH GEAR)
14. LINE - TO FILTER
15. LINE - FROM FILTER
16. EXHAUST

Copyright © 2000 ATSG

Figure 31

https://truckmanualshub.com/

MAIN CASE "REAR" PASSAGE I.D.

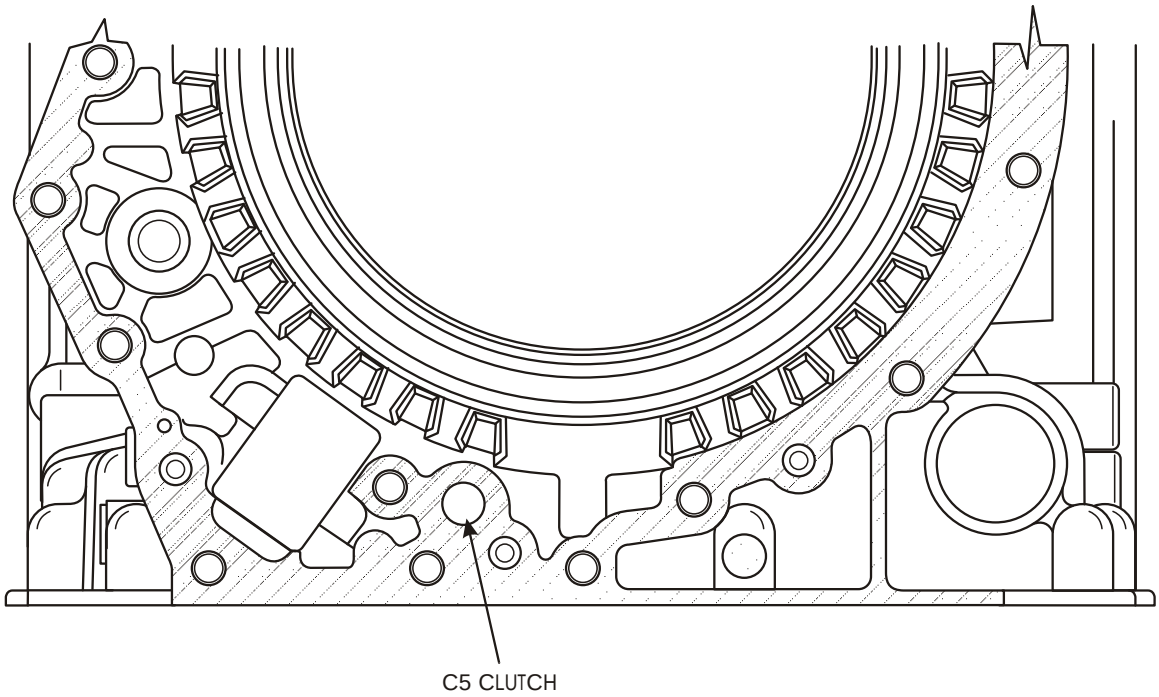

Copyright © 2000 ATSG

Figure 32

COOLER MANIFOLD PASSAGE I.D.

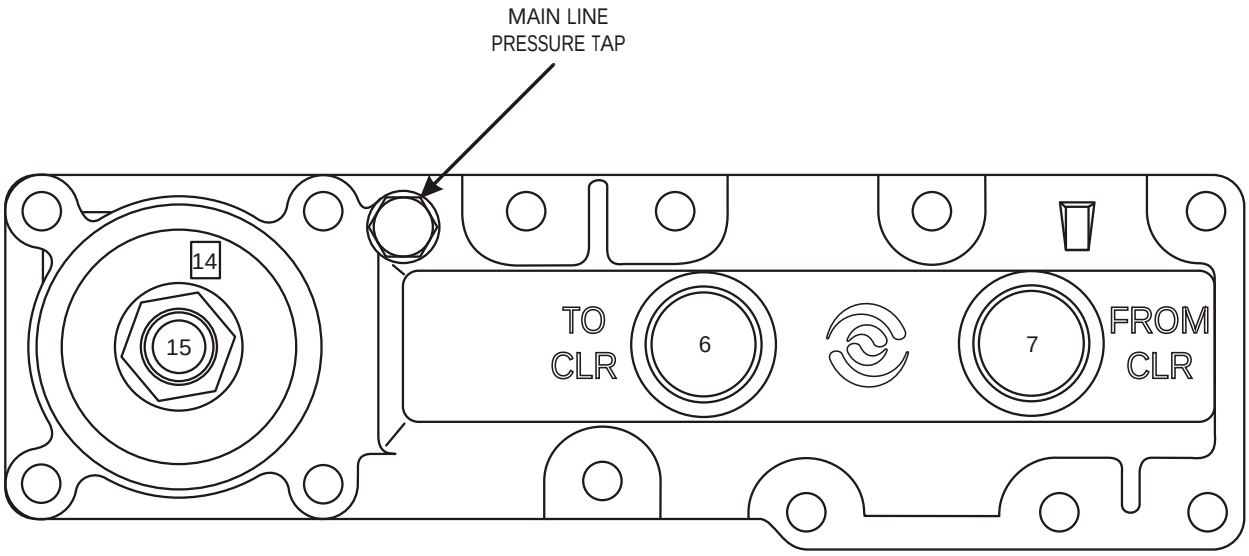

6. TO COOLER
7. FROM COOLER
14. LINE - TO FILTER

Copyright © 2000 ATSG

Figure 33

PUMP COVER OIL PASSAGE I.D.

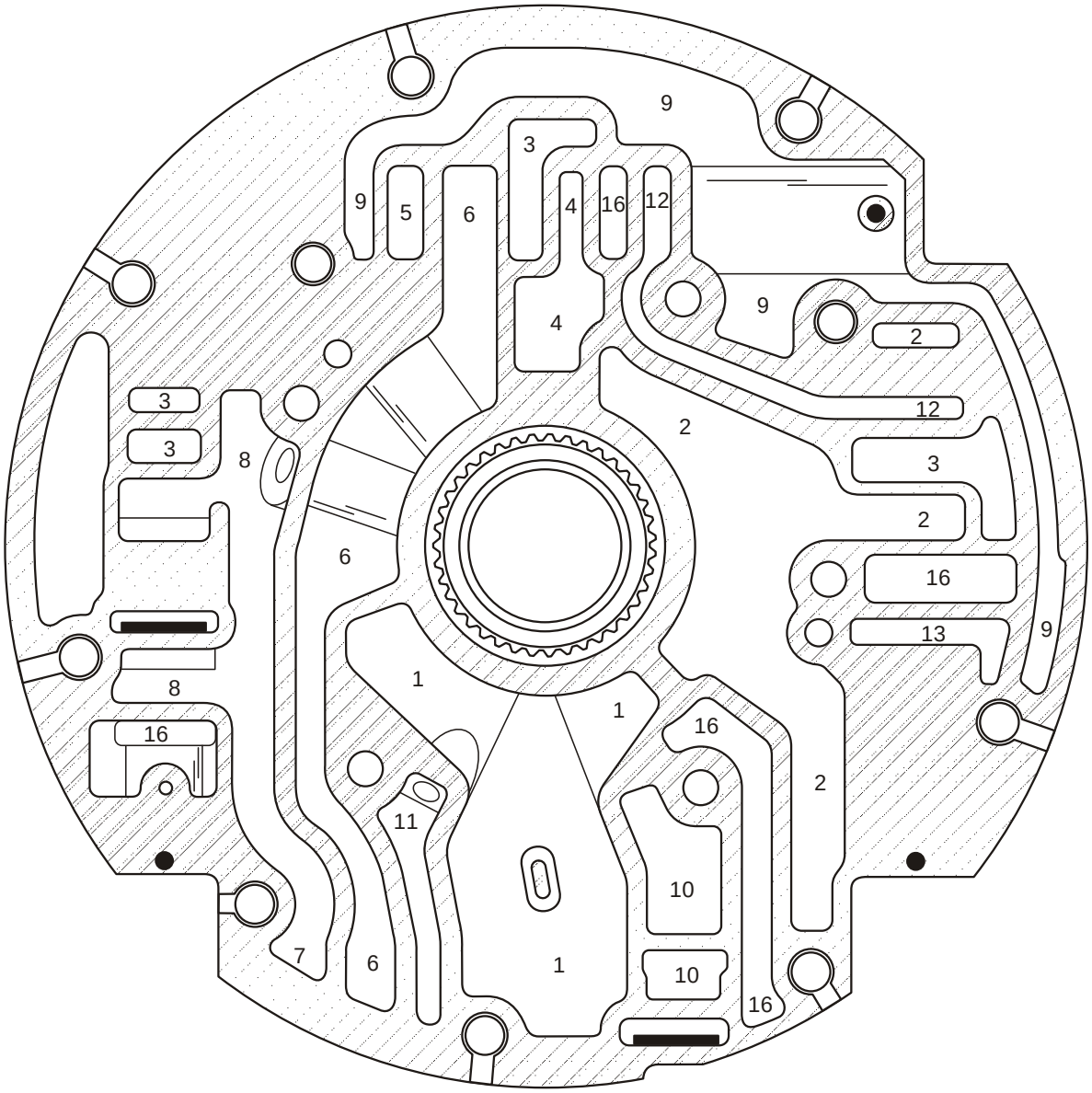

1. PUMP SUCTION
2. LINE PRESSURE
3. OVERAGE (CONV RELEASE)
4. CONVERTER IN
5. CONVERTER OUT
6. TO COOLER
7. FROM COOLER
8. LUBE OIL
9. LOCK-UP APPLY
10. C1 CLUTCH
11. C2 CLUTCH
12. LOCK-UP SIGNAL
13. CUT-BACK (5TH GEAR)
16. EXHAUST

Copyright © 2000 ATSG

Figure 34

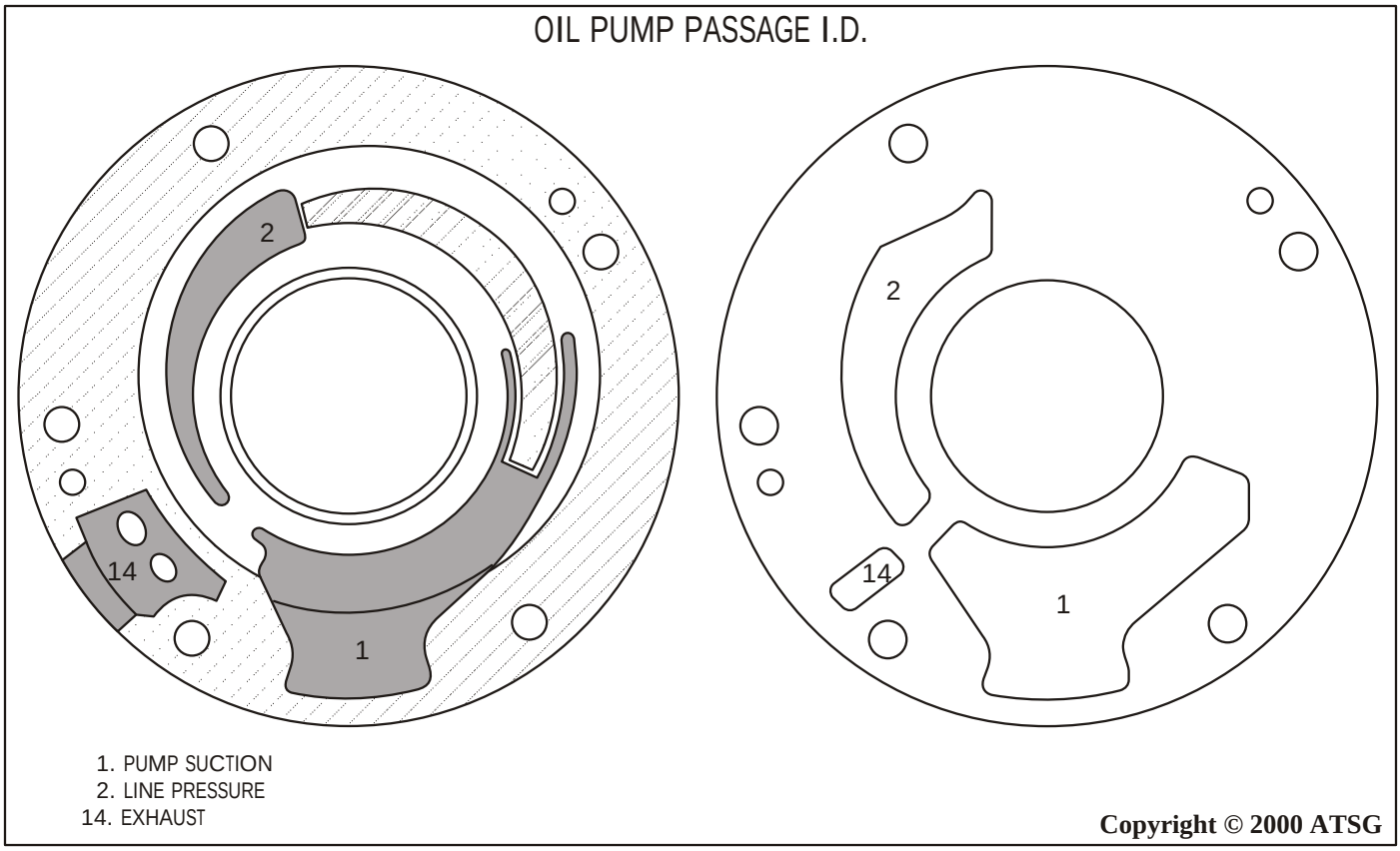

Figure 35

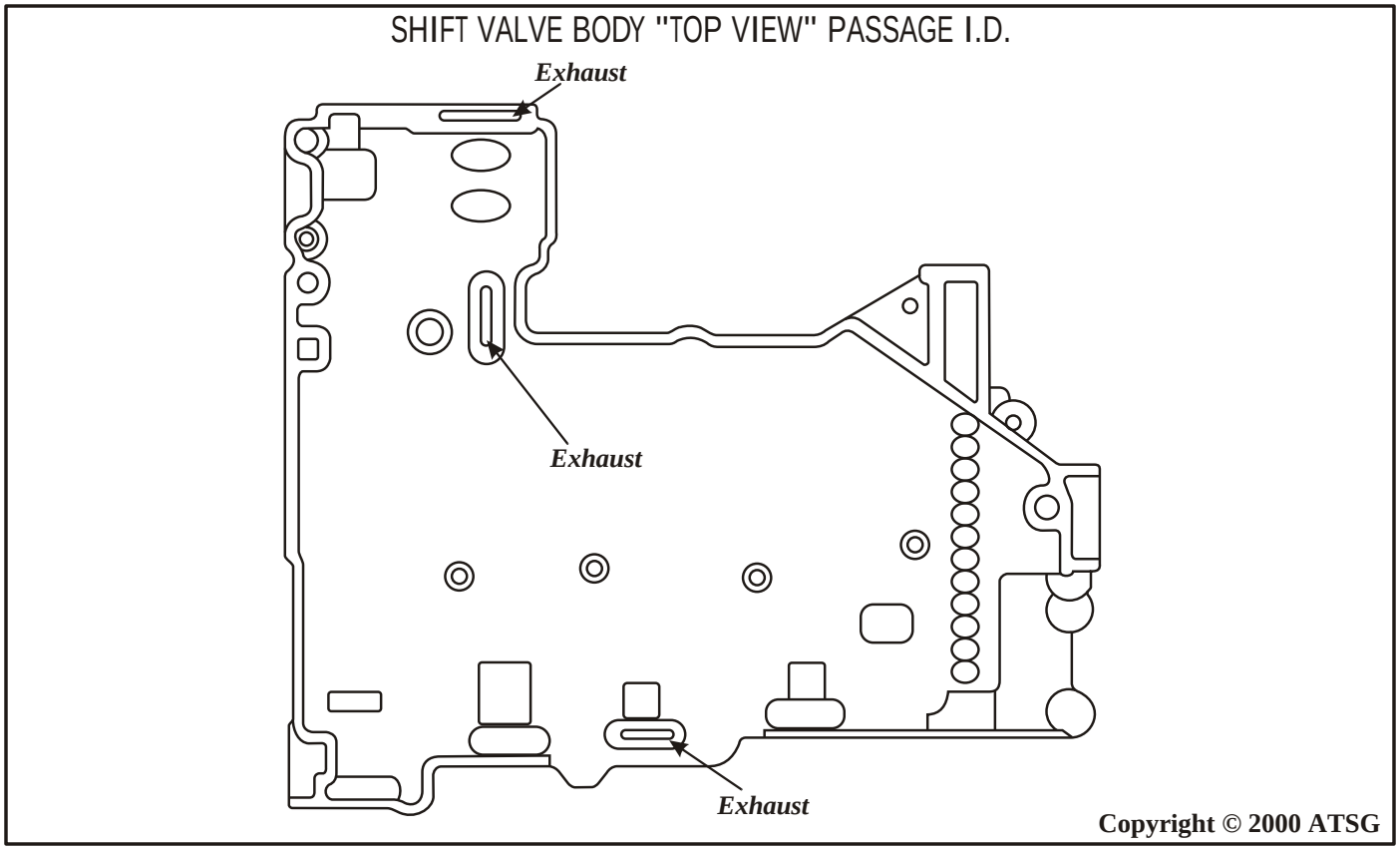

Figure 36

https://truckmanualshub.com/

LEGEND FOR FIGURES 38, 39, AND 41.

Passage No.	Reverse	Park/Neut	1st	2nd	3rd	4th	5th
1	Pump Suction						
2	Main Line Pressure						
9	TCC Apply						
10	Exhaust Backfill/ C-1 Clutch		C-1 Clutch				EBF/ C-1 Clutch
11	C-2 Clutch/Exhaust Backfill					C-2 Clutch	
12	Lock-Up Signal						
13	Cut-Back (5th Gear)						
14	Control Main Line Pressure To Filter						
16	Exhaust To Sump						
15	Control Main Line Pressure From Filter						
30	Reverse Pressure Switch						
31	"D" Shift Valve Pressure Switch						
32	"E" Shift Valve Pressure Switch						
33	"C" Shift Valve Pressure Switch						
34	C-3 Clutch	Exhaust Backfill/ C-3 Clutch			C-3 Clutch	EBF/C-3 Clutch	C-3 Clutch
35	C-4 Clutch						
36	C-5 Clutch						
37	Exhaust Backfill						
38	"A" Trim Solenoid Signal						
39	"B" Trim Solenoid Signal						
40	"A" Clutch Trim						
41	"B" Clutch Trim						
42	"A" Clutch Trim Feedback						
43	"B" Clutch Trim Feedback						
44	"D" Solenoid Signal						
45	"E" Solenoid Signal						
46	"C" Solenoid Signal						
47	Exhaust Backfill	C-1/B Trim	C-1/Main			C-1/B Trim	C-1/EBF
48	Control Main After "B" Solenoid Screen						
49	Main Line Pressure		B Trim	C-2/EBF	C-2/B Trim	C-2/Main	
50	Exhaust Backfill	Thermister					
51	C-3/B Trim	C-3/EBF	Exhaust Backfill				Cut-Back
52	"E" Shift Valve Interlock						
53	"D" Signal TCC Interlock				Exhaust		
54	C-1/EBF	C-1/B Trim	C-1/Main			C-1/B Trim	C-1/EBF
55	Exhaust Backfill		C-2/EBF		C-2/B Trim	C-2/Main	
56	Exhaust Backfill/C-5 Clutch (Power Off State)						
57	C-3/B Trim	C-3/EBF		C-4/B Trim	C-4/EBF	OD/EBF	OD/B Trim

Copyright © 2000 ATSG

Figure 37

https://truckmanualshub.com/

SHIFT VALVE BODY "BOTTOM VIEW" PASSAGE I.D.

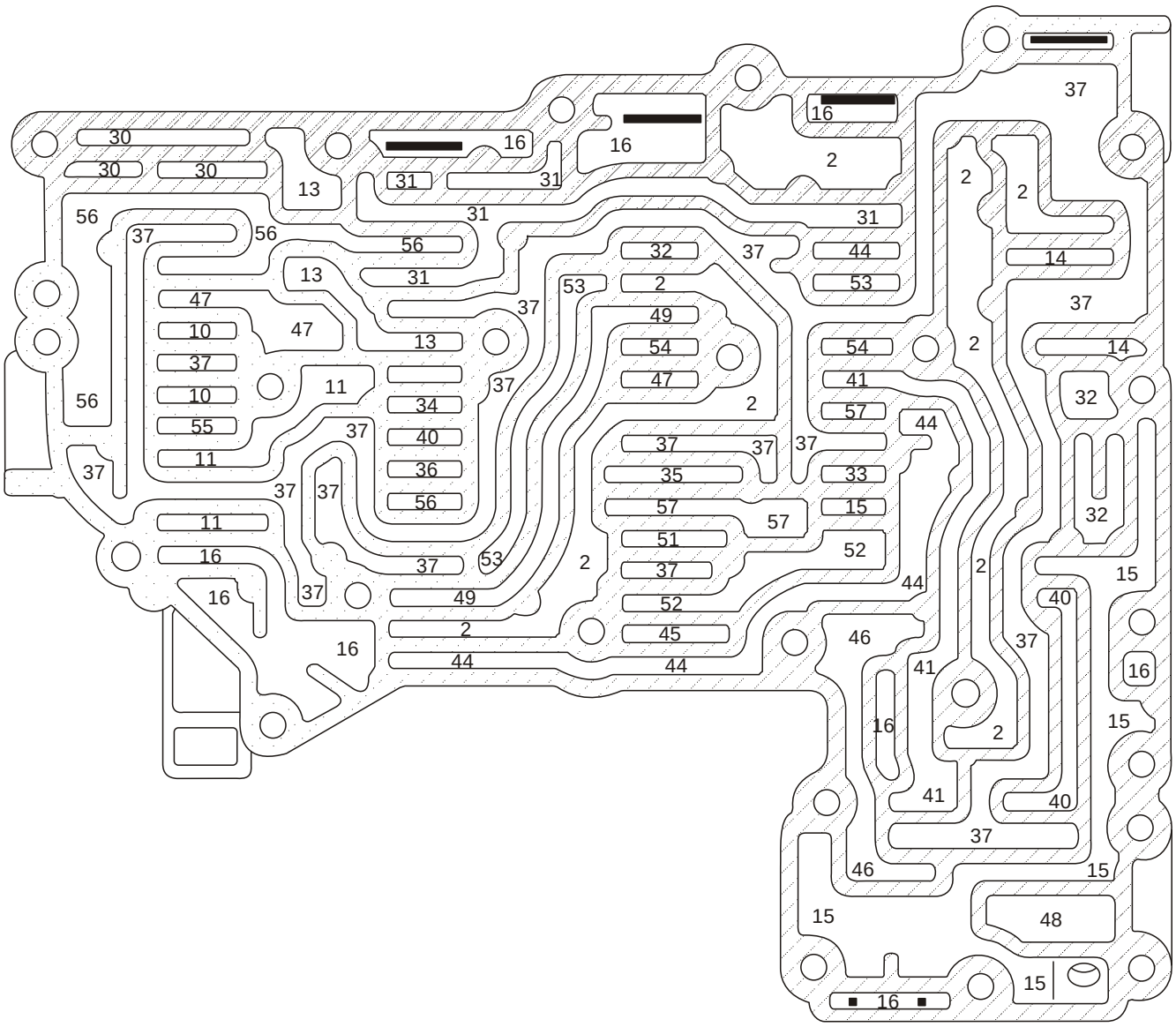

LEGEND FOUND ON PAGE 30.

Copyright © 2000 ATSG

Figure 38

https://truckmanualshub.com/

MAIN VALVE BODY "TOP VIEW" PASSAGE I.D.

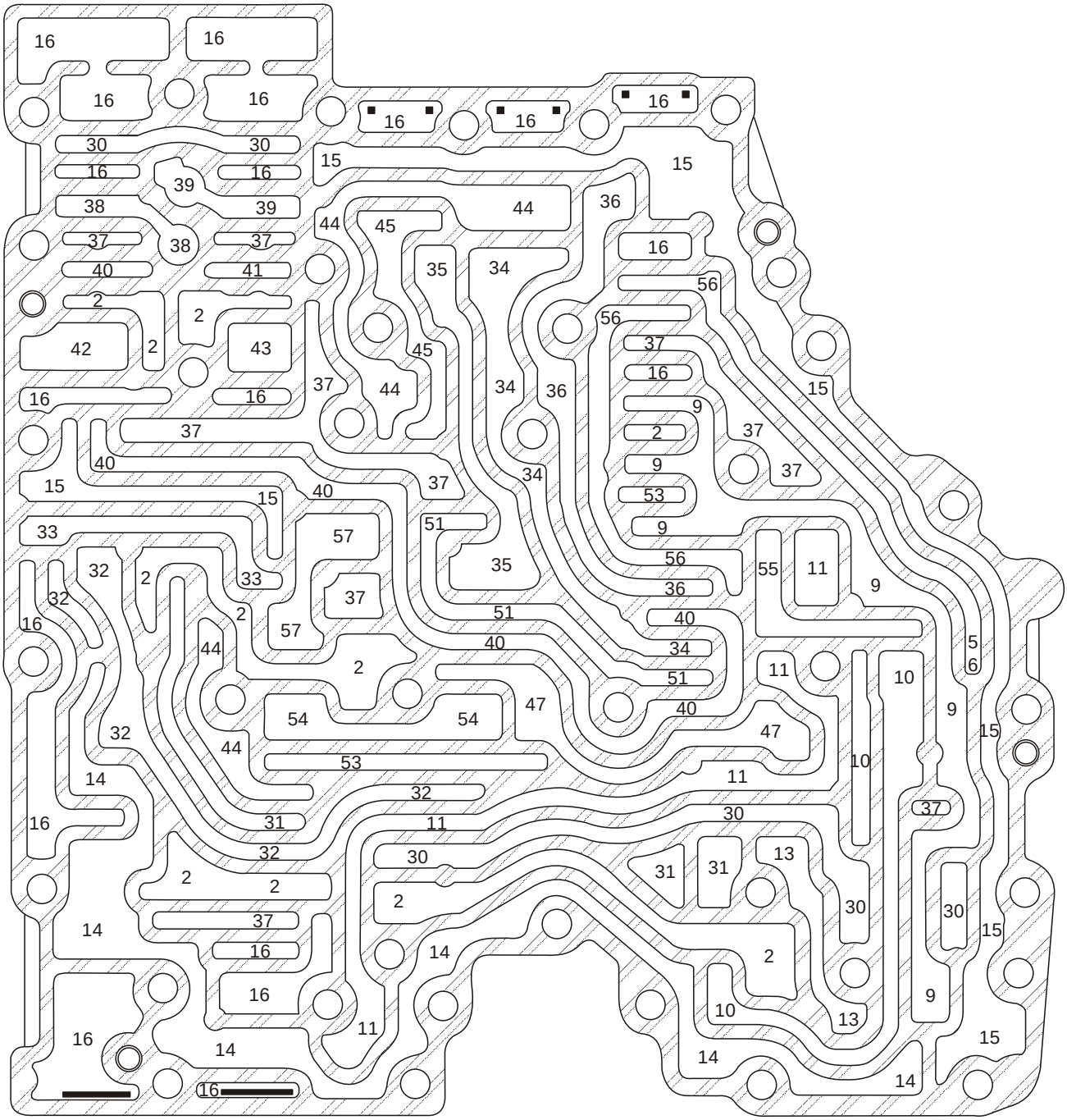

LEGEND FOUND ON PAGE 30.

Copyright © 2000 ATSG

Figure 39

https://truckmanualshub.com/

MAIN VALVE BODY "BOTTOM VIEW" PASSAGE I.D.

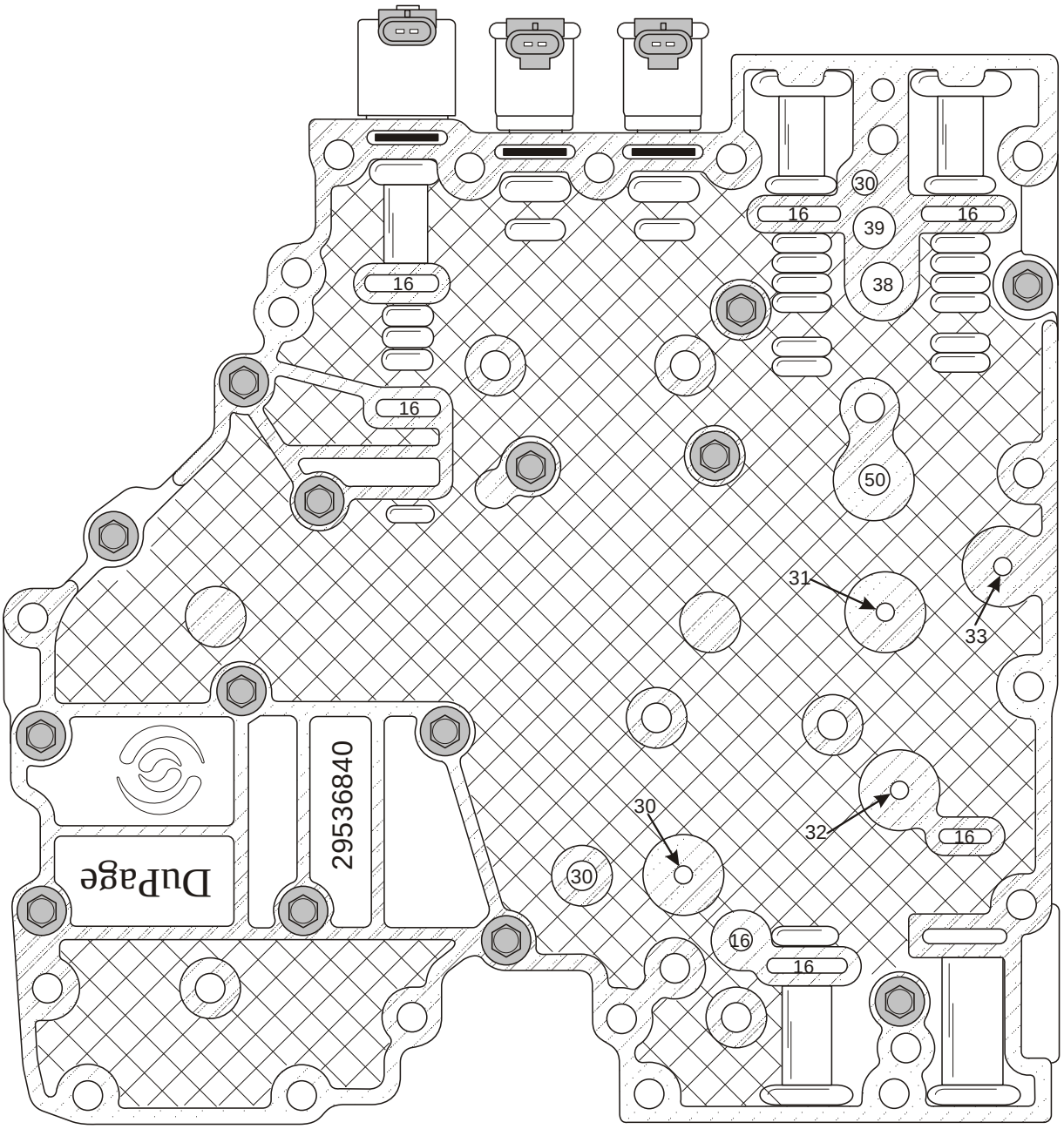

16. EXHAUST.
30. REVERSE PRESSURE SWITCH.
31. "D" SHIFT VALVE PRESSURE SWITCH.
32. "E" SHIFT VALVE PRESSURE SWITCH.
33. "C" SHIFT VALVE PRESSURE SWITCH.
38. "A" TRIM SOLENOID SIGNAL.
39. "B" TRIM SOLENOID SIGNAL.
50. FLUID TEMPERATURE SENSOR (THERMISTER).

Copyright © 2000 ATSG

Figure 40

https://truckmanualshub.com/

TYPICAL VALVE BODY SPACER PLATE

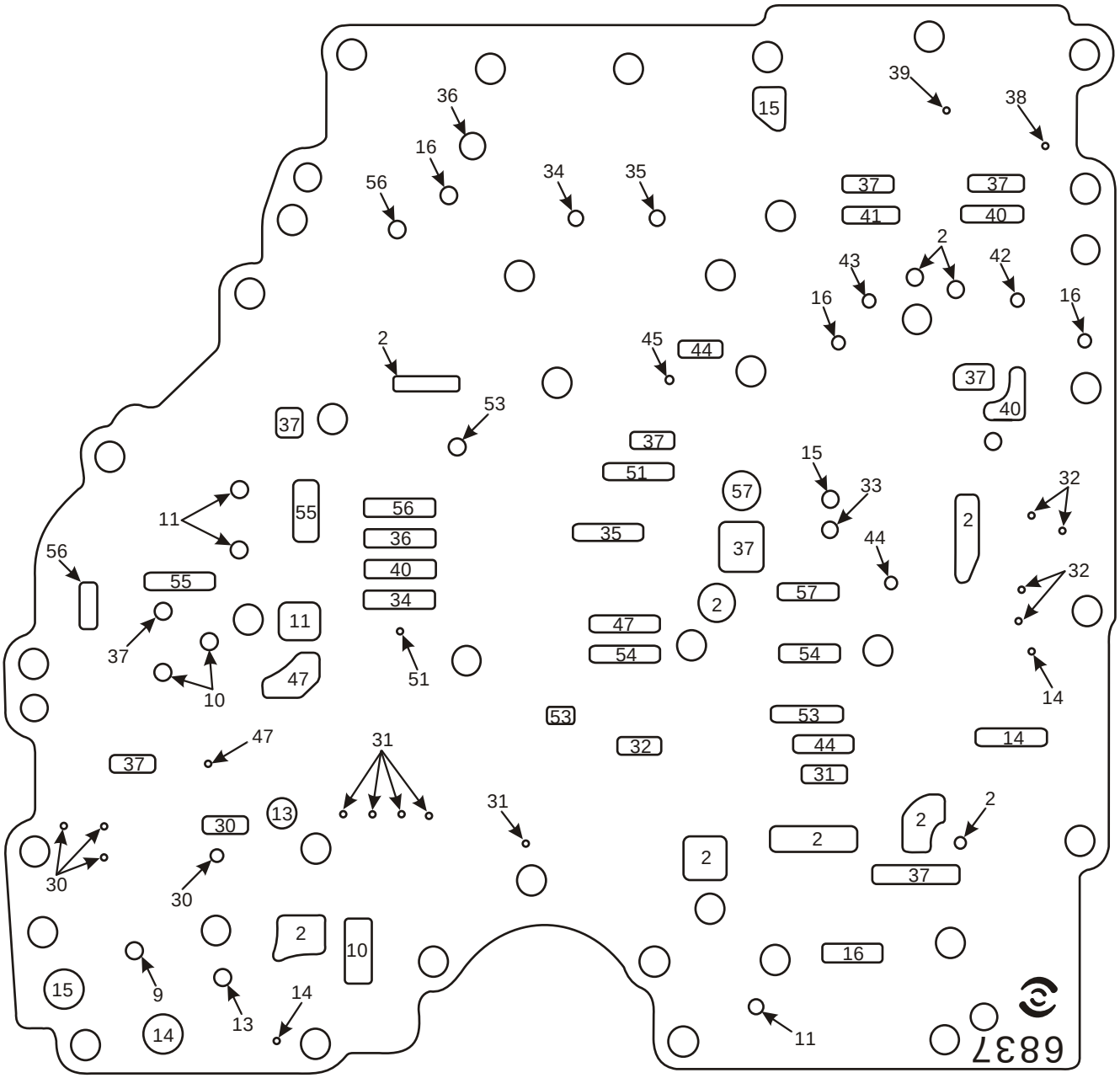

LEGEND FOUND ON PAGE 30.

Copyright © 2000 ATSG

Figure 41

https://truckmanualshub.com/

MAIN CASE "BOTTOM VIEW" PASSAGE I.D.

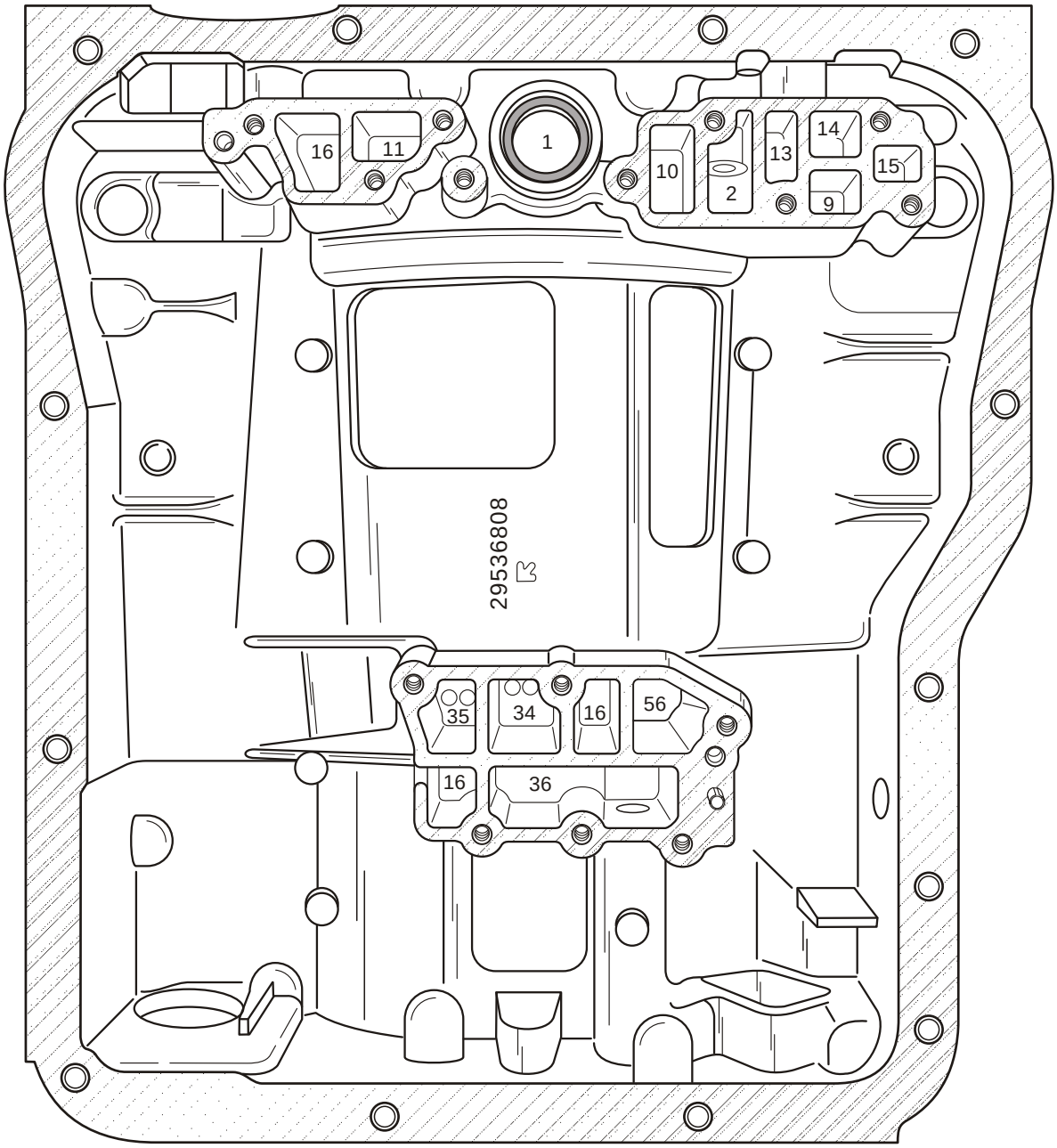

1. SUCTION.
2. MAIN LINE PRESSURE.
9. TCC APPLY.
10. C -1 CLUTCH.
11. C -2 CLUTCH.
13. CUT-BACK (OverDrive).
14. CONTROL MAIN TO FILTER.
15. CONTROL MAIN FROM FILTER.
16. EXHAUST TO SUMP.
34. C -3 CLUTCH.
35. C -4 CLUTCH.
36. C -5 CLUTCH.
56. C -5 CLUTCH (Power-Off State).

Copyright © 2000 ATSG

Figure 42

TRANSMISSION DISASSEMBLY

EXTERNAL COMPONENTS

1. Remove the six PTO cover retaining bolts or the Power Take Off whichever it is equipped with, on the right hand side of the transmission as shown in Figure 43.
2. Install holding fixture similar to the one shown in Figure 43, onto the PTO surface, to be used with the bench fixture base.
   Caution: Because of the mass and the weight of this unit, we feel it necessary to use holding fixture shown in Figure 43, with the fixture base or in a suitable turn-over stand.
3. Using a suitable hoist, lift the transmission and install into bench fixture base, or the suitable turn-over stand.
4. With transmission assembly locked, in the pan facing down position, remove the converter by pulling it straight out (See Figure 44).
   Caution: This torque converter weighs about 60 pounds, so exercise extreme caution.
5. Remove the engine speed sensor, turbine speed sensor and output speed sensor, as shown in Figure 45.
   Note: The engine speed sensor, if equipped, the turbine speed sensor, and the output speed sensor on 2WD models are all the same part number (See Figure 45).
6. Remove and discard the "O" rings from the 3 speed sensors (See Figure 45).
7. Remove the Neutral Start Back-Up switch from the side of case, as shown in Figure 45.
   Note: The NSBU Switch is exactly the same as the 4L60-E switch (See Figure 45).
8. Rotate the transmission in the fixture so that the oil pan is facing up (See Figure 46).

Continued on Page 38

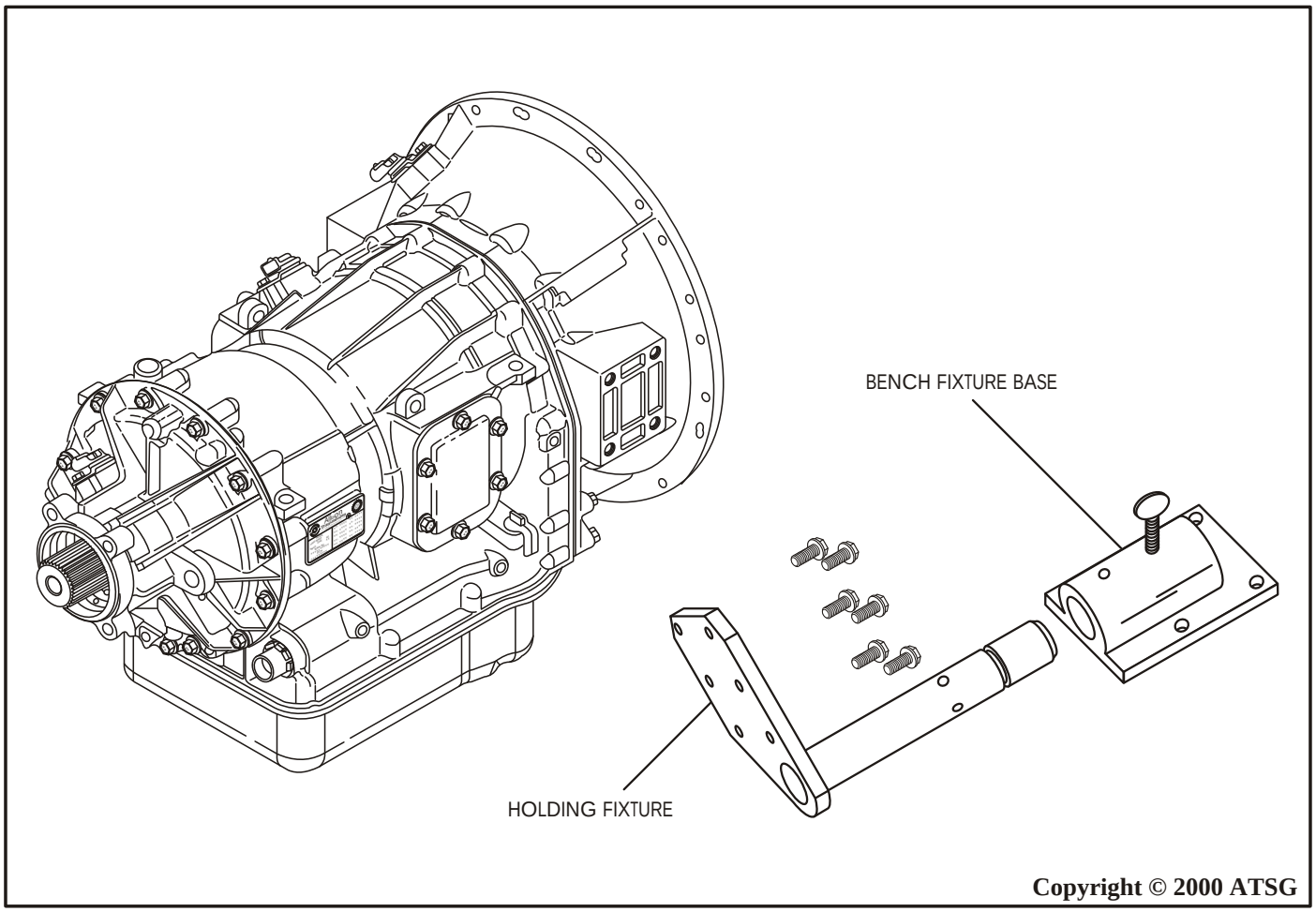

Figure 43

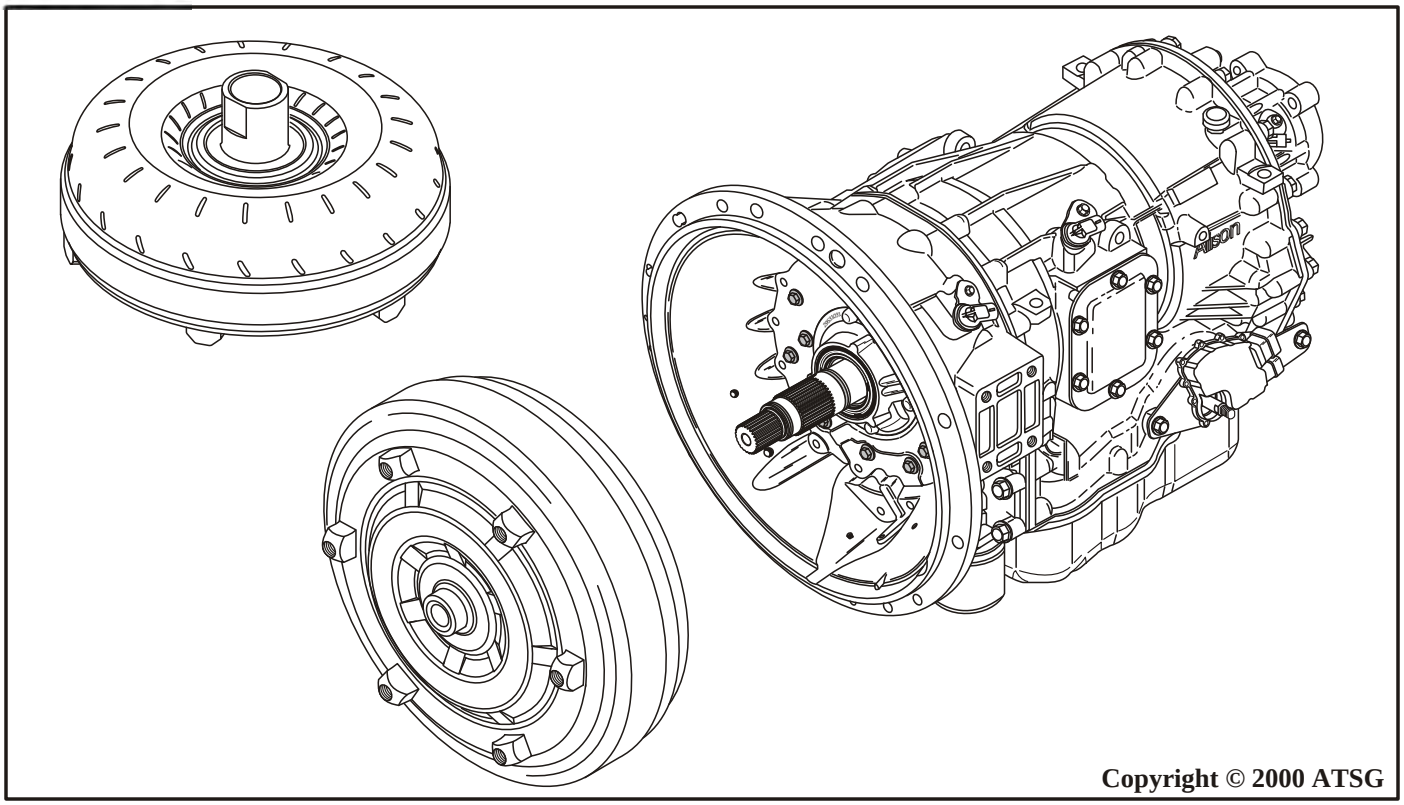

Figure 44

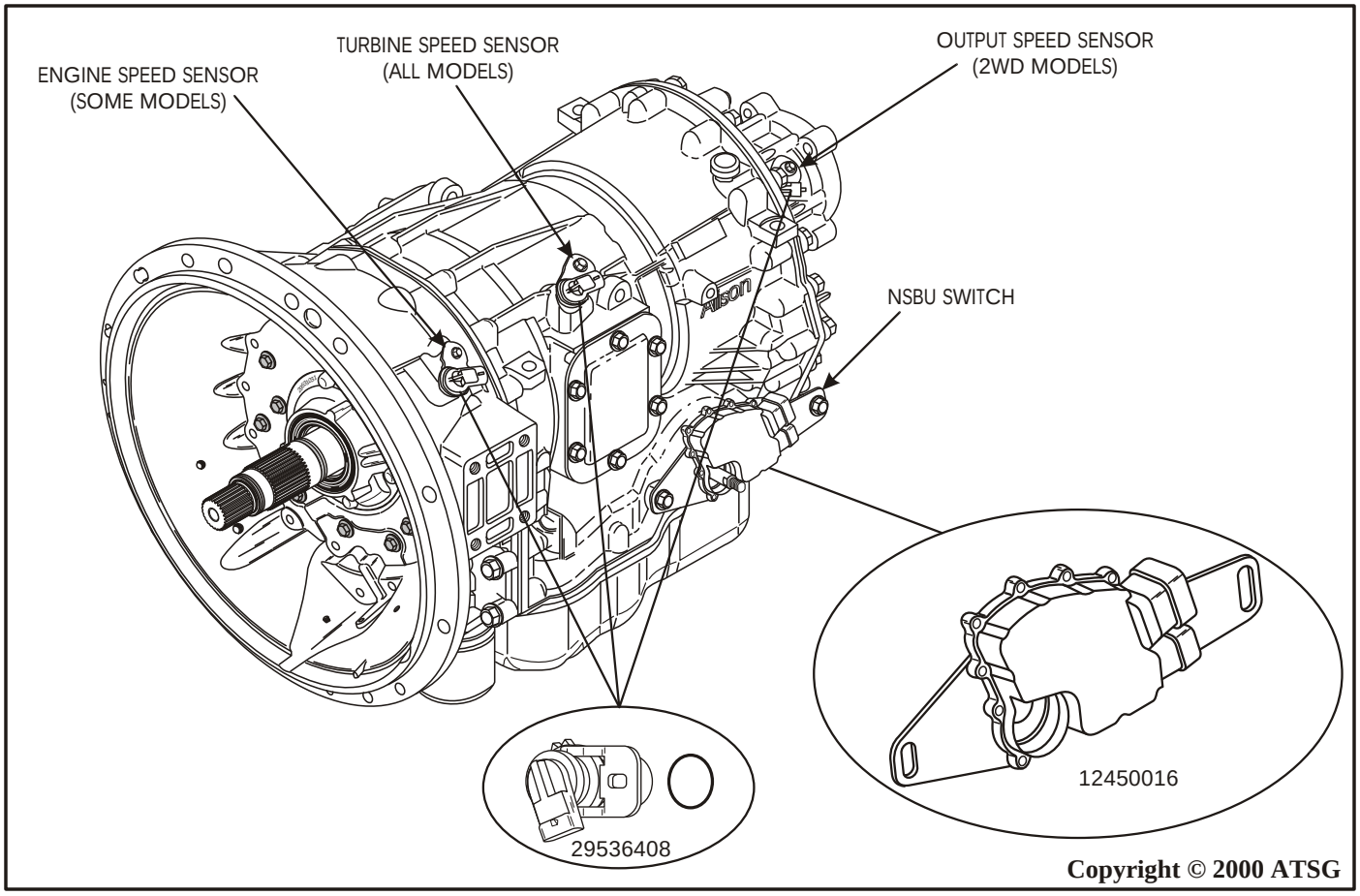

Figure 45

https://truckmanualshub.com/

CONTINUED FROM PAGE 36

9. Remove the twelve bottom pan retaining bolts, using a 13 mm socket (See Figure 46).
10. Remove the bottom oil pan (See Figure 46).
11. Remove and discard the bottom pan gasket, as shown in Figure 46.
12. Remove and discard the bottom pan filter and filter seal, as shown in Figure 47.
13. Remove the inside detent roller and spring assembly retaining bolts, using an 8mm socket, as shown in Figure 48.
14. Remove the inside detent roller and spring assembly, as shown in Figure 48.
15. Remove the pass through case connector from the case bore using the Teckpakä GM harness removal tool, as shown in Figure 49.
16. Remove the 15 valve body to case retaining bolts, using an 8mm socket (See Figure 50). ***Note: Remove "Only" the valve body to case bolts that are shaded as shown in Figure 50.***

Continued on Page 40

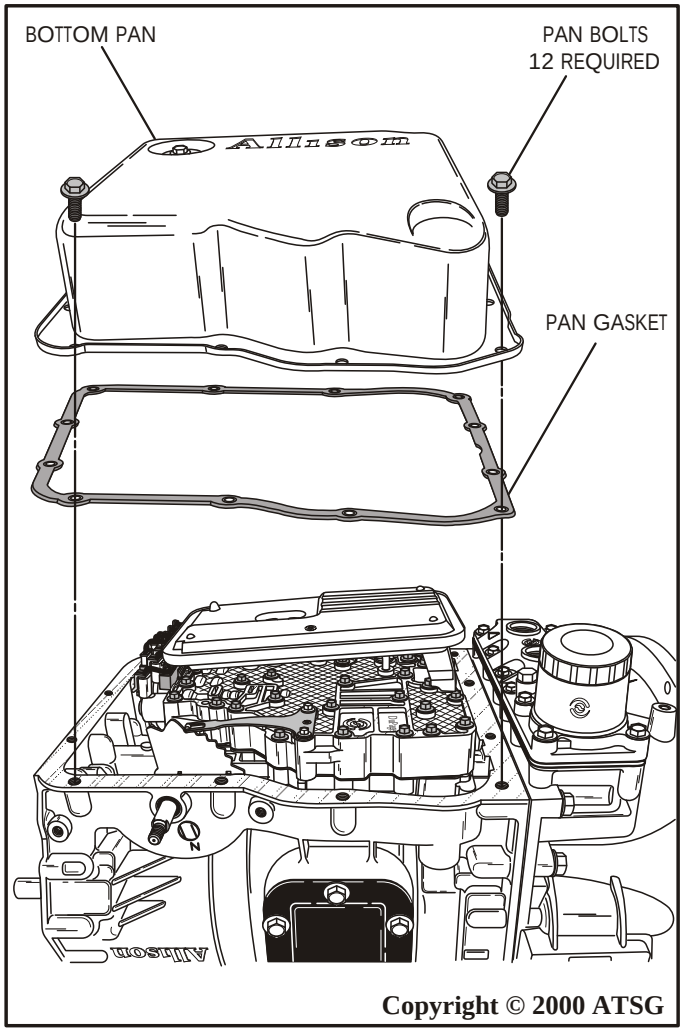

Figure 46

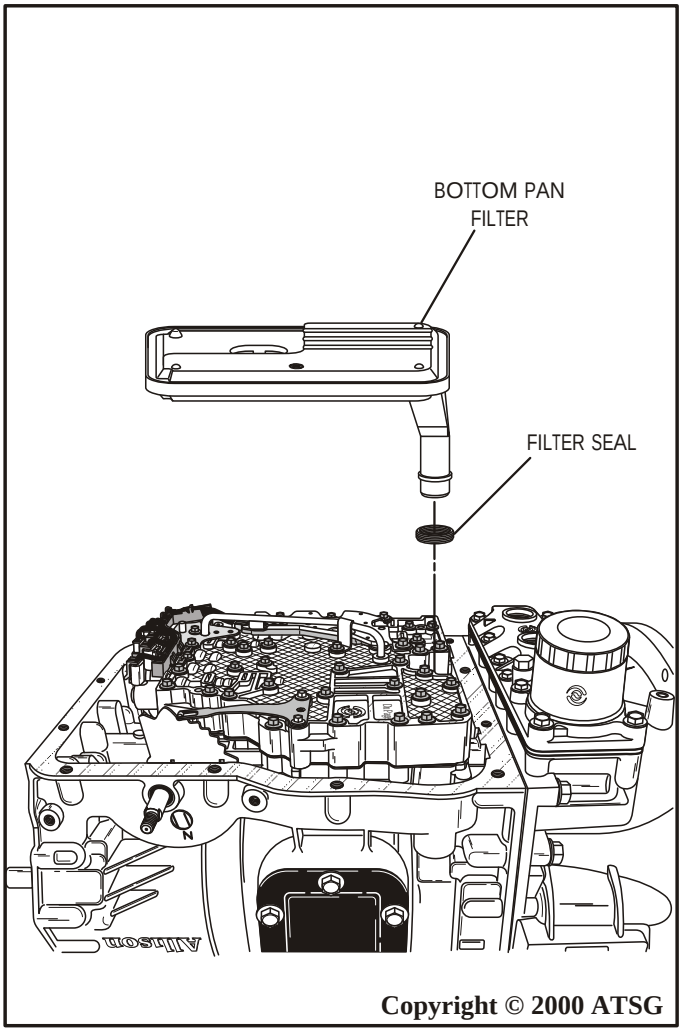

Figure 47

https://truckmanualshub.com/

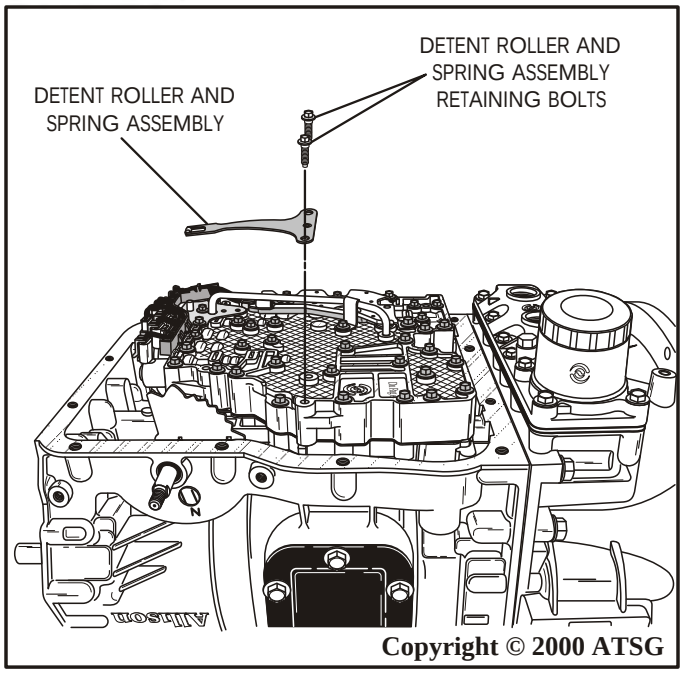

Figure 48

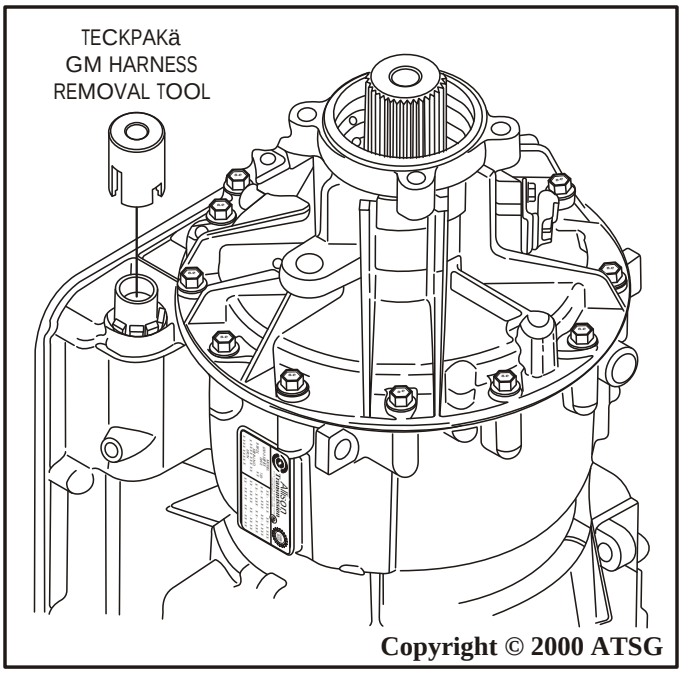

Figure 49

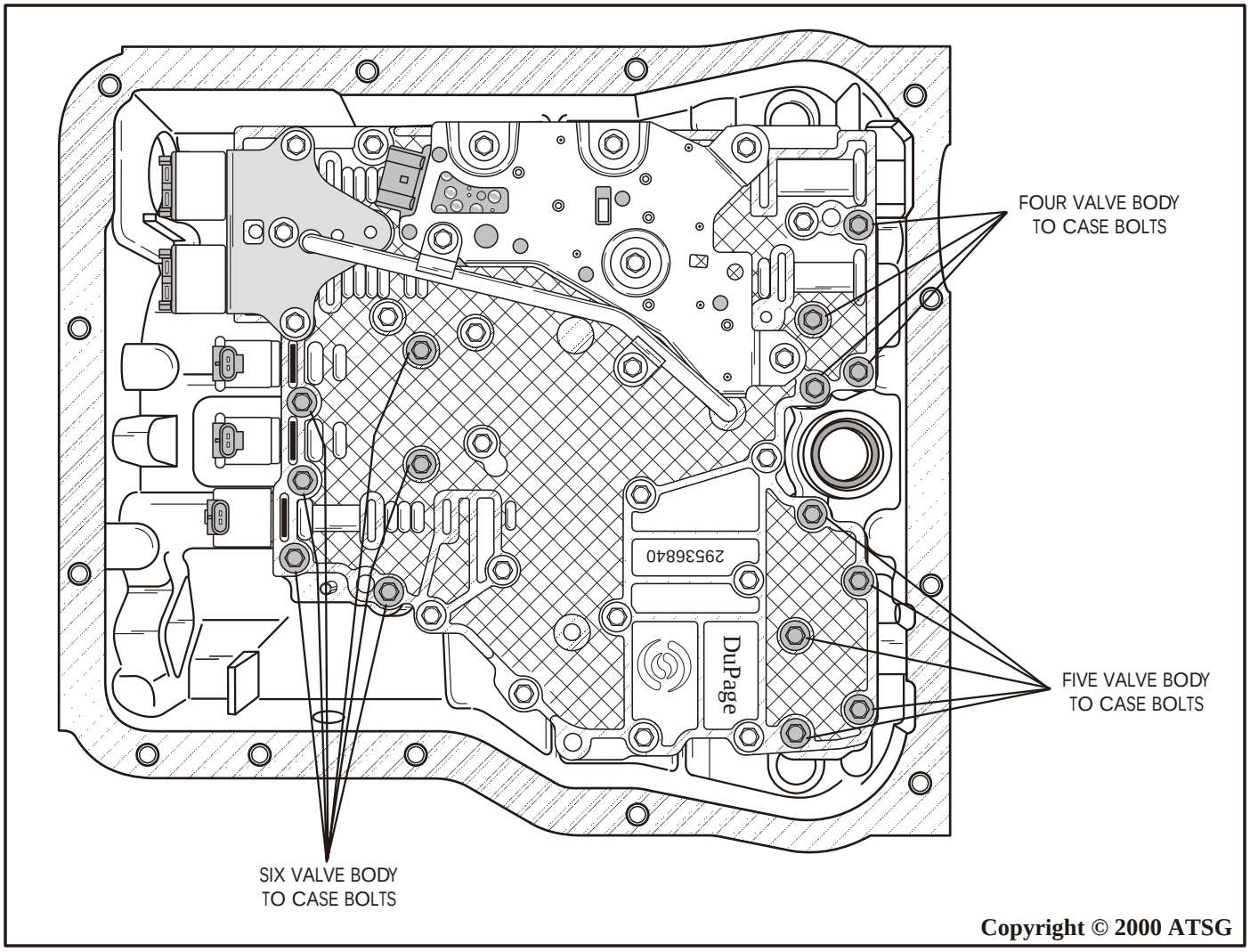

Figure 50

https://truckmanualshub.com/

CONTINUED FROM PAGE 38

17. After the 15 valve body bolts are removed, you can remove the valve body, ensuring that you disengage the manual valve pin from the inside detent lever, as shown in Figure 51.
18. Set the complete valve body assembly aside for the component rebuild process.
19. Remove the external oil filter from the cooler manifold or the bell housing, depending on the design, as shown in Figure 52.
20. Remove the cooler manifold assembly retaining bolts, as shown in Figure 54.
21. Remove the cooler manifold assembly from the bell housing, as shown in Figure 54.
22. Remove and discard the 2 cooler manifold gaskets, as shown in Figure 54.
23. Rotate the transmission in the fixture so that the bell housing is facing up (See Figure 53).

Continued on Page 42

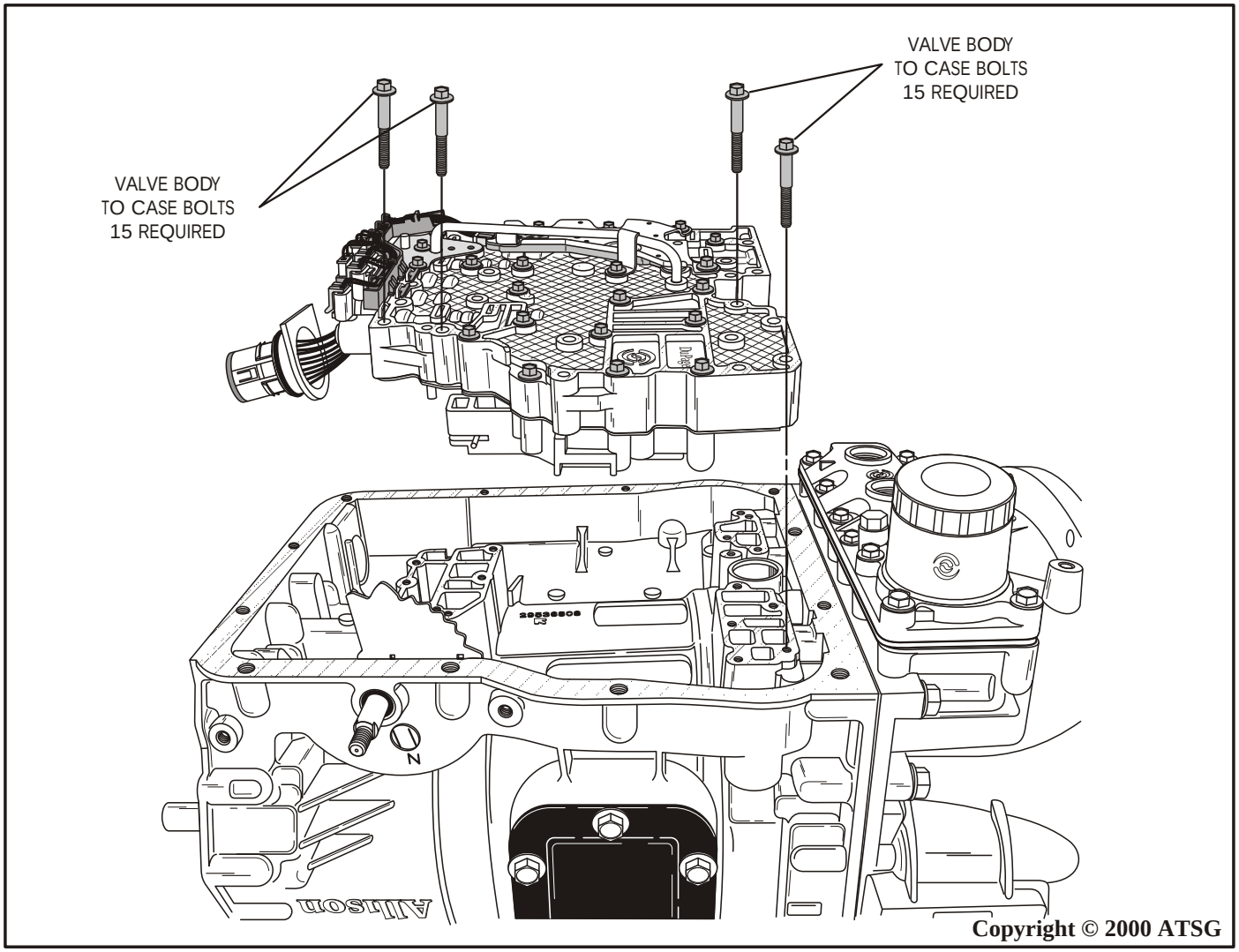

Copyright © 2000 ATSG

Figure 51

https://truckmanualshub.com/

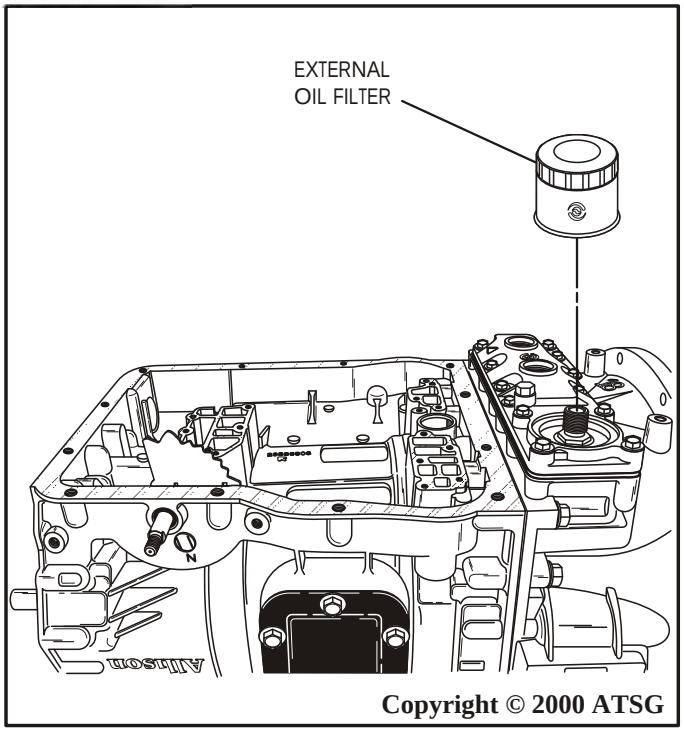

Figure 52

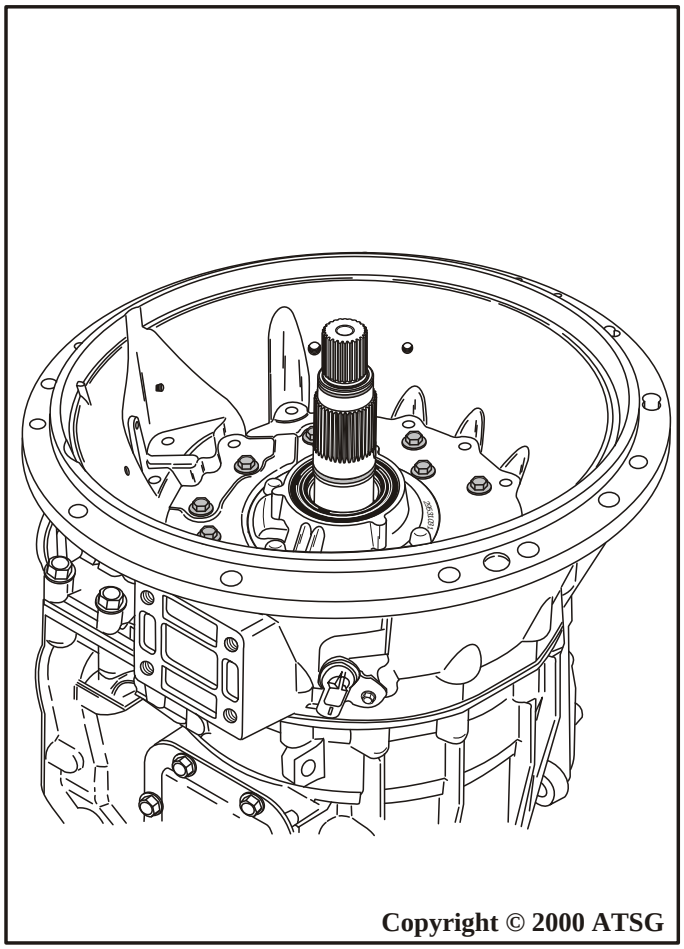

Figure 53

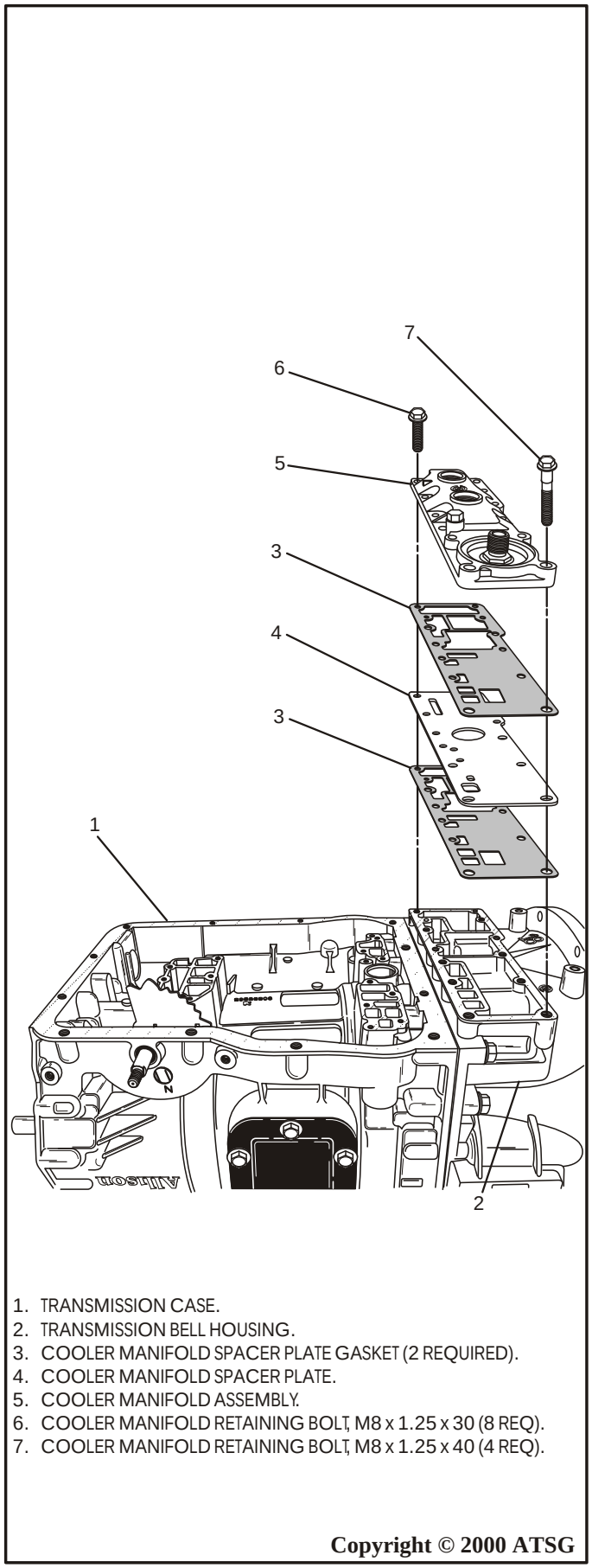

Figure 54

https://truckmanualshub.com/

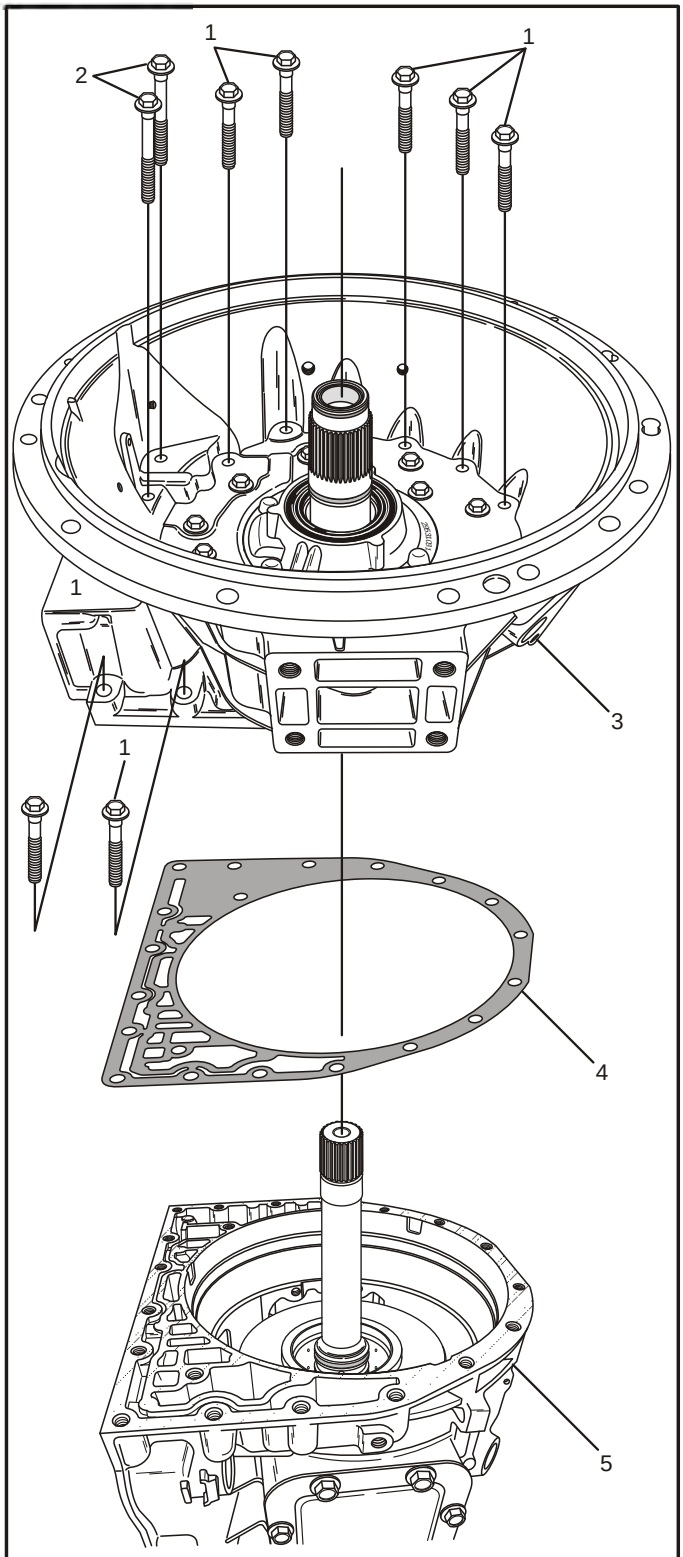

1. BELL HOUSING TO CASE BOLTS, M10 X 1.5 X 50, (11 INSIDE BELL, 2 EACH SIDE ON OUTSIDE, TOTAL 15 REQ.)
2. BELL HOUSING TO CASE BOLTS, M10 X 1.5 X 70, (5 REQUIRED)
3. BELL HOUSING AND PUMP ASSEMBLY
4. BELL HOUSING SPACER PLATE TO CASE GASKET
5. MAIN TRANSMISSION CASE ASSEMBLY

Copyright © 2000 ATSG

Figure 55

CONTINUED FROM PAGE 40

24. Remove 2 bell housing bolts from each side of the case that are not inside the bell housing, as shown in Figure 55.
25. Remove the bell housing to case bolts that are shaded, from inside the bell housing, as shown in Figure 56.
    Note: Remove the shaded bolts only, as shown in Figure 56. There will be 11 bolts that are 50mm long and 5 bolts that are 70mm long. The remaining bolts retain pump to bell.
26. Remove bell housing and oil pump assembly from the transmission case, by lifting straight up, as shown in Figure 55.
27. Remove and discard the pump spacer plate to case gasket (See Figure 55).
28. Set the bell housing and pump assembly aside for the component rebuild process.
29. Remove the C1/C2 clutch housing from the case by lifting straight up using the turbine, as shown in Figure 57.
    Note: Remove the sun gear/planetary carrier thrust bearing if it is not stuck to sun gear as shown in Figure 57.

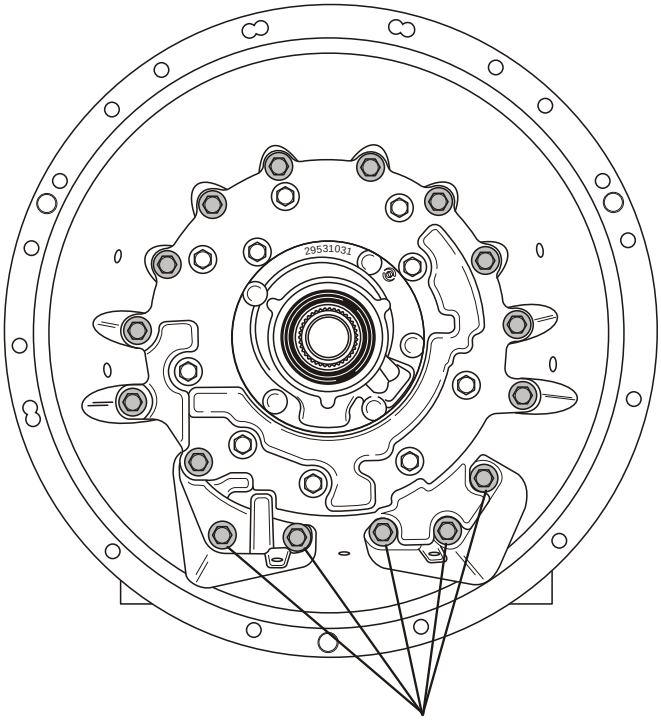

5 BOLTS 70mm IN LENGTH
OTHER 11 ARE 50mm IN LENGTH

Copyright © 2000 ATSG

Figure 56

30. Set C1/C2 clutch housing aside for component rebuild process that is covered later.
31. Rotate transmission case so that the extension housing is facing up as shown in Figure 58.
32. Remove the yoke from the transmission if it is equipped with one, as shown in Figure 58.
    Note: Some models are equipped with the parking brake as shown in Figure 58. Four Wheel Drive models will have neither.

Continued on Page 45

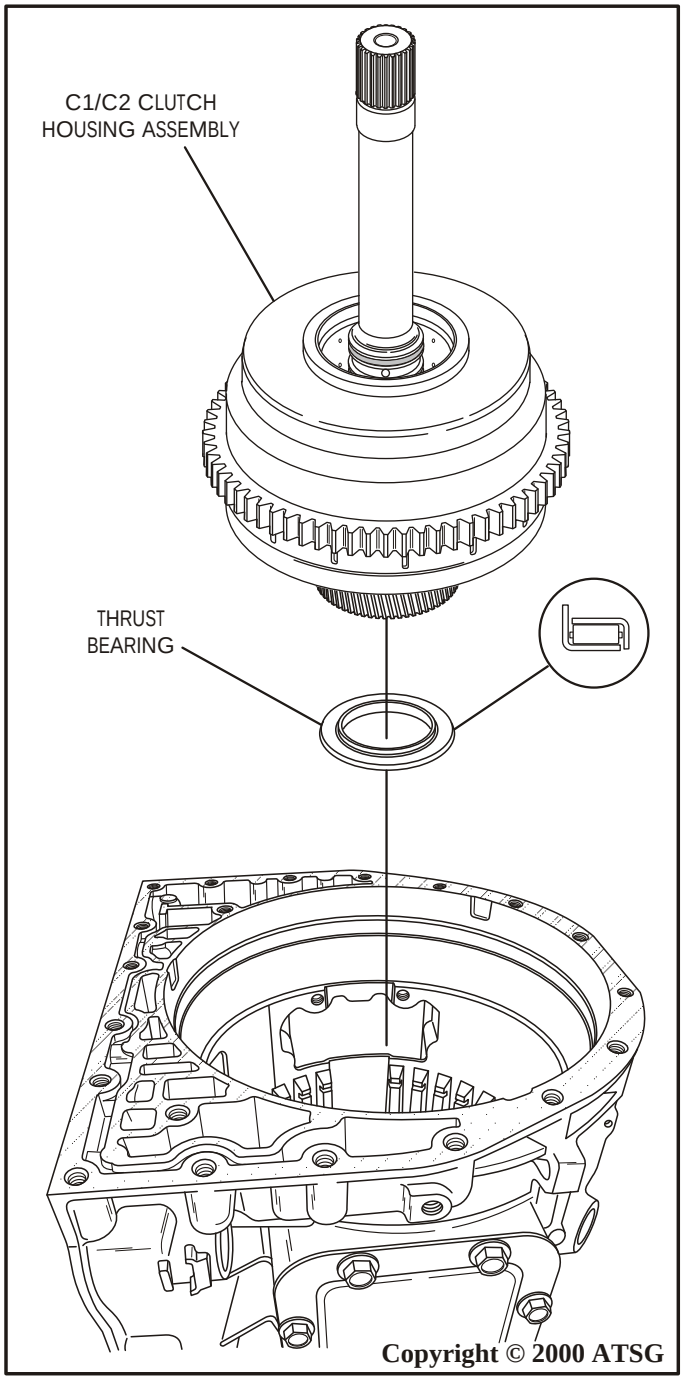

Figure 57

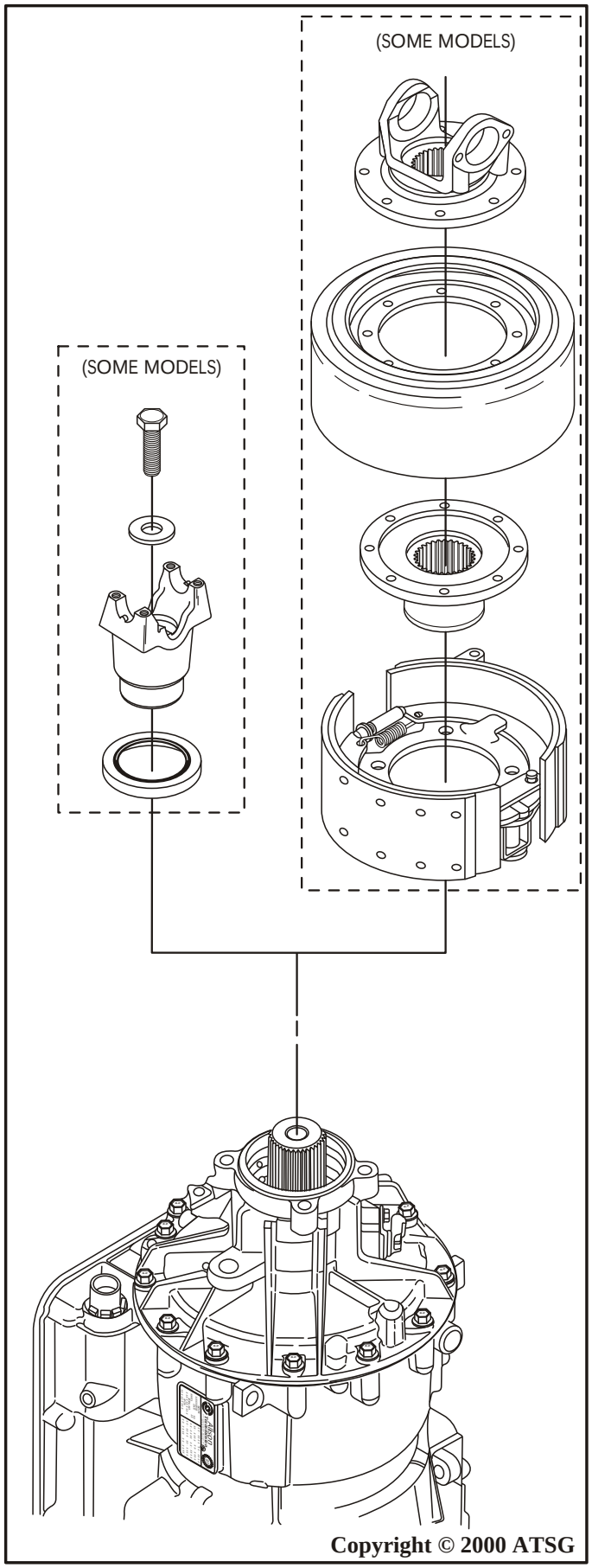

Figure 58

https://truckmanualshub.com/

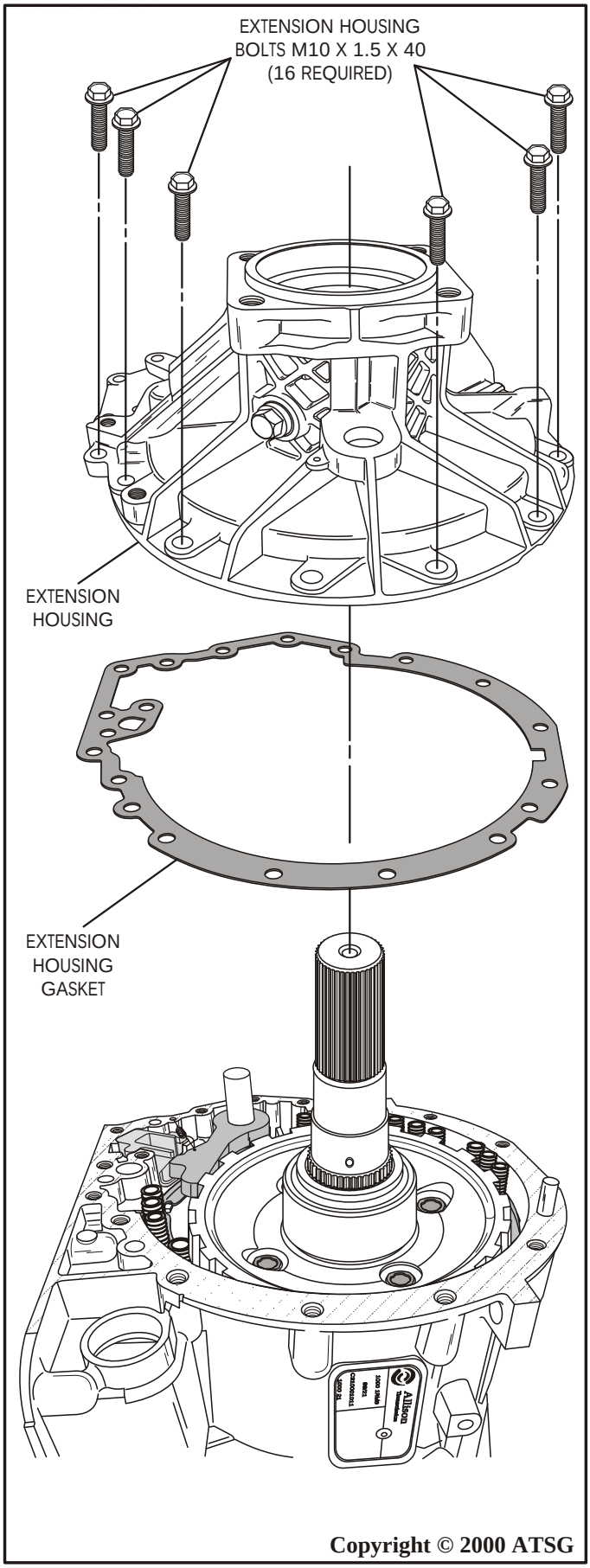

Figure 59

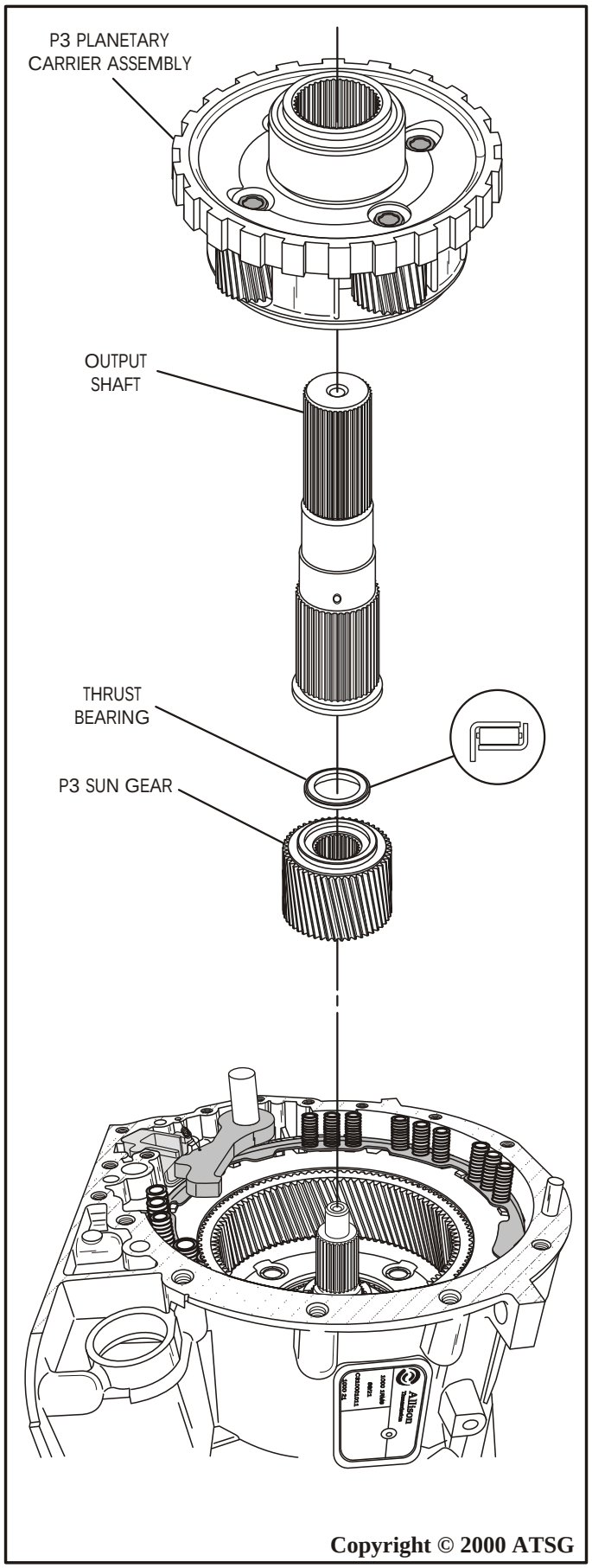

Figure 60

https://truckmanualshub.com/

CONTINUED FROM PAGE 43

33. Remove the 16 extension housing bolts, using a 15mm socket (See Figure 59).
34. Remove the extension housing assembly and set aside for the component rebuild process,as shown in Figure 59.
35. Remove and discard the extension housing gasket, as shown in Figure 59.
36. Grasp the output shaft splines and lift straight up, removing the output shaft and P3 planetary carrier as an assembly (See Figure 60).
37. Remove the P3 sun gear and the thrust bearing as shown in Figure 60.
38. Grasp the main shaft splines and lift straight up removing the main shaft, P2 sun gear and the sun gear spacer, as shown in Figure 62.
39. Remove the parking pawl shaft by pulling up and twisting motion at the same time. This will help in the removal as it is air locked in the case bore (See Figure 62).
40. Remove the parking pawl by slight twisting motion to disconnect from the parking pawl return spring (See Figures 61 and 62).

Continued on Page 47

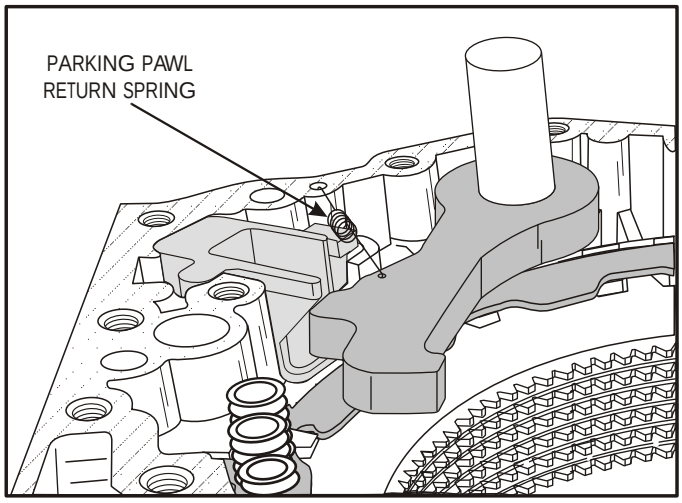

Figure 61

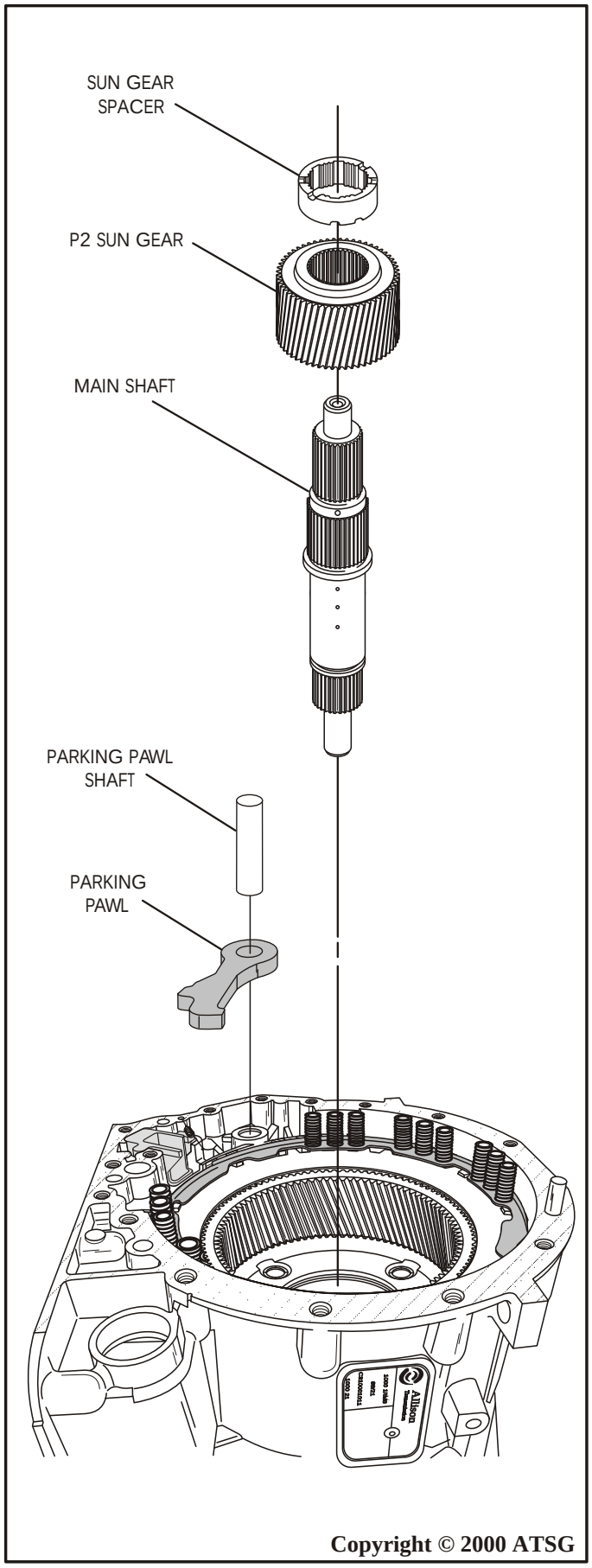

Copyright © 2000 ATSG

Figure 62

https://truckmanualshub.com/

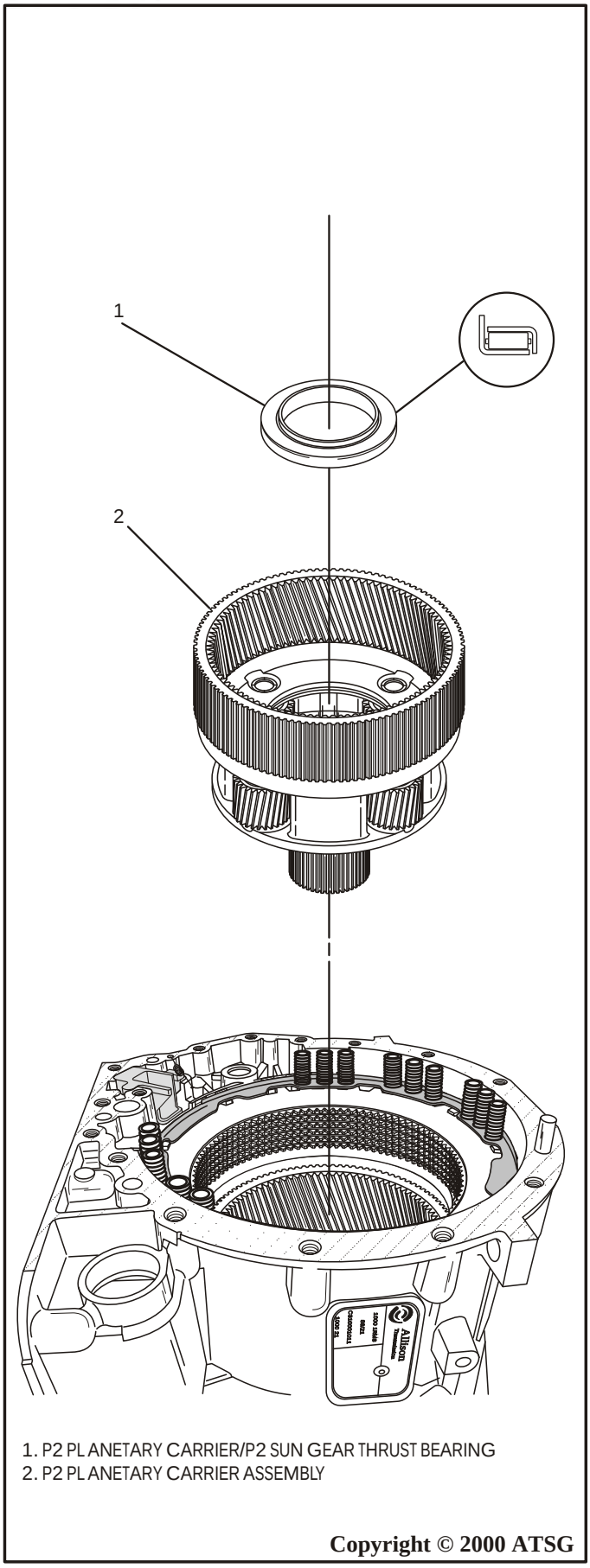

Figure 63

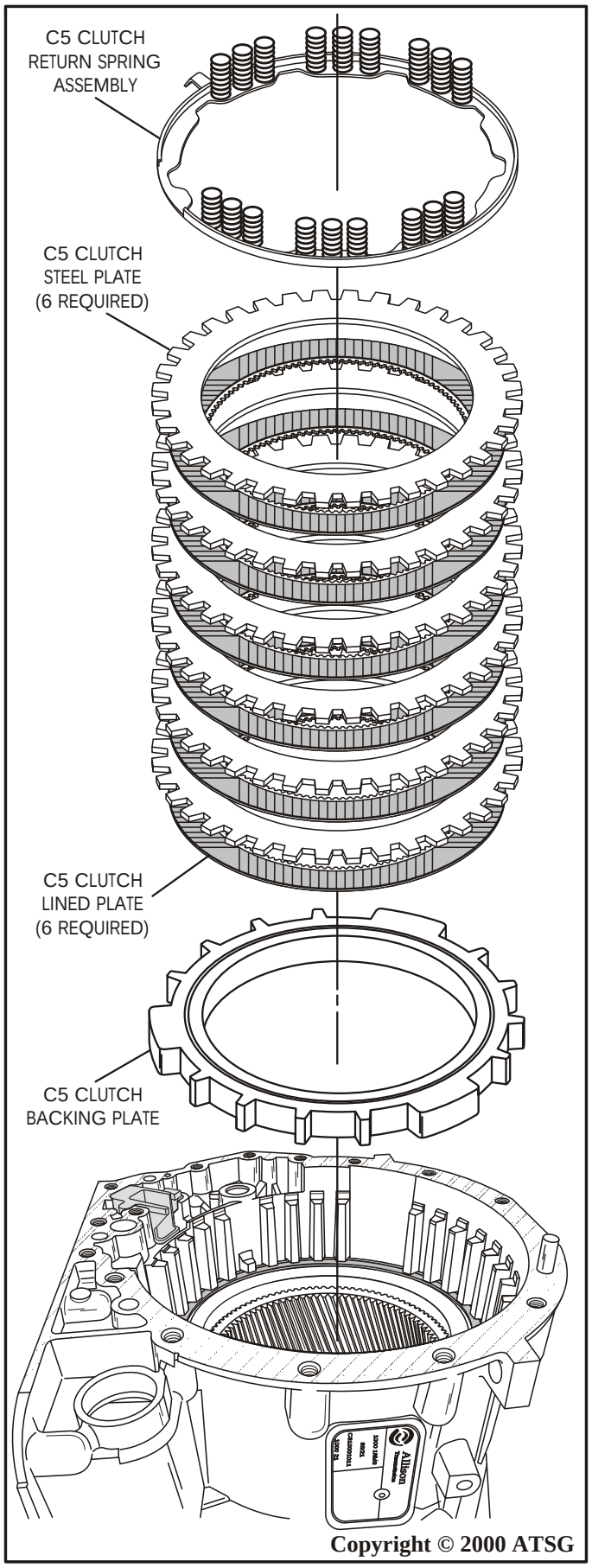

Figure 64

https://truckmanualshub.com/

CONTINUED FROM PAGE 45

41. Remove the P2 planetary carrier assembly by lifting up with a slight twisting motion. Refer to Figure 63.
    Note: The planetary carrier to P2 sun gear thrust bearing will be removed with the planetary carrier (See Figure 63).
42. Remove the C5 clutch return spring assembly from case, as shown in Figure 64.
43. Remove the C5 clutches both lined and steel from case, as shown in Figure 64.
45. Remove the C5 clutch backing plate from the case, as shown in Figure 64.
46. Remove the P1 planetary carrier assembly by lifting up with a slight twisting motion. Refer to Figure 65.
    Note: The P1 planetary carrier/P2 planetary carrier thrust bearing, and the P2 ring gear to P1 ring gear thrust washer will be removed with the carrier assembly (See Figure 65).

Continued on Page 49

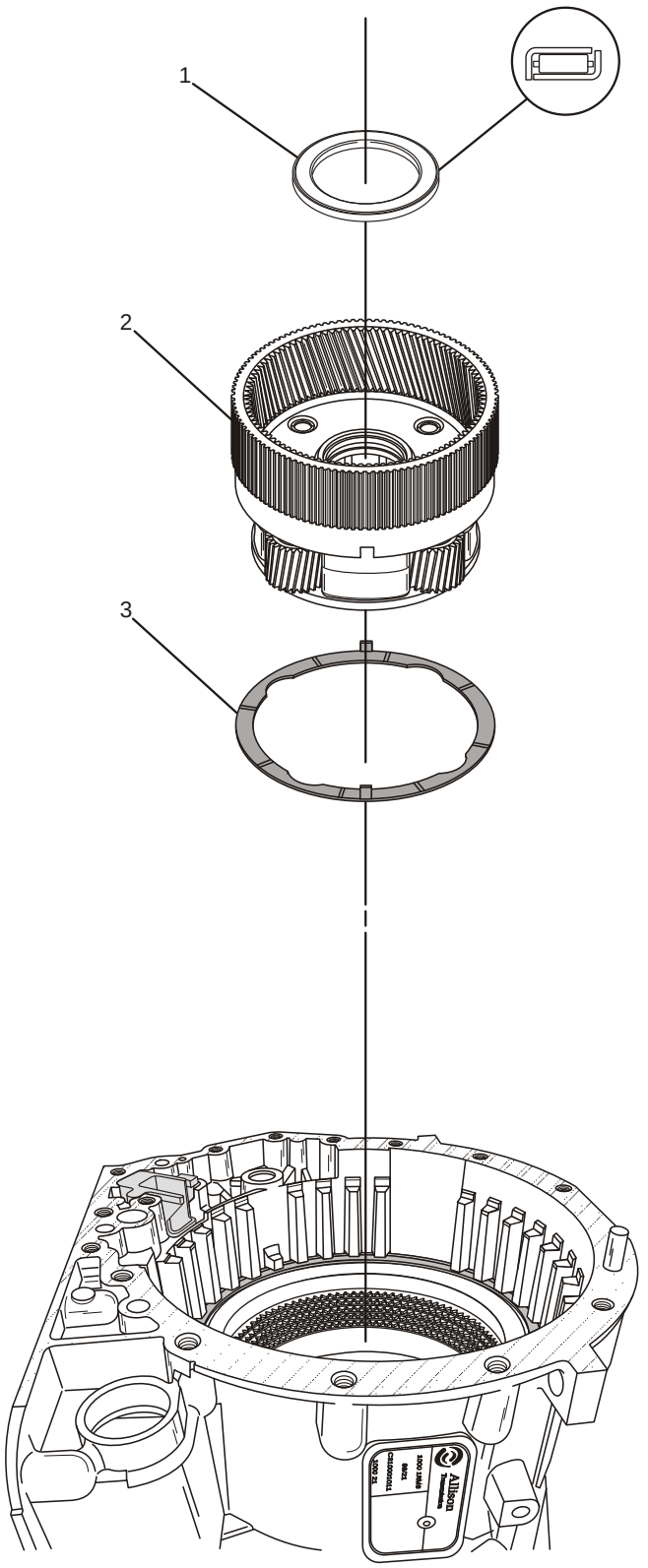

1. P1 PLANET CARRIER/P2 PLANET CARRIER THRUST BEARING
2. P1 PLANETARY CARRIER ASSEMBLY
3. P1 RING GEAR/P2 RING GEAR "PEEK" THRUST WASHER

Copyright © 2000 ATSG

Figure 65

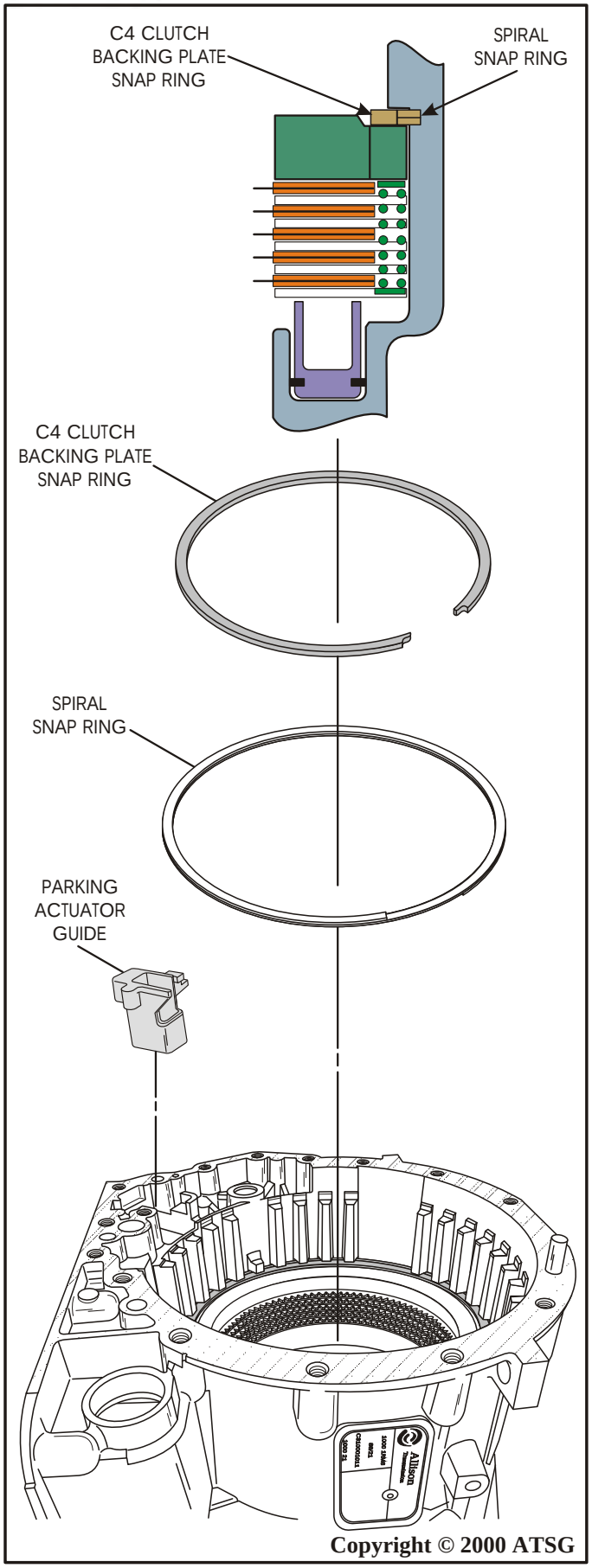

Figure 66

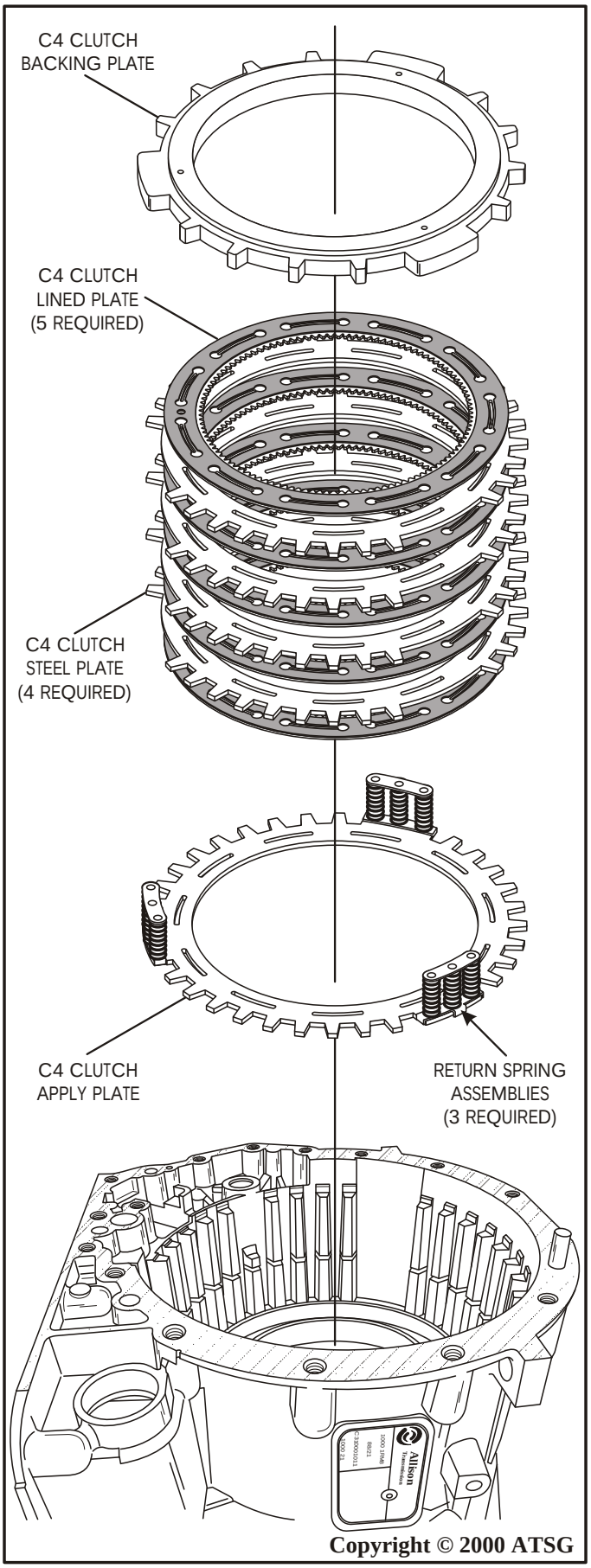

Figure 67

https://truckmanualshub.com/

CONTINUED FROM PAGE 47

47. Remove the parking actuator guide from case as shown in Figure 66.
48. Remove the C4 clutch backing plate snap ring from the groove in case (See Figure 66).
49. From the ***same*** groove in the case, remove the spiral snap ring from case (See Figure 66).
    Note: Refer to the cut-away in Figure 66 to see how these snap rings are in groove.
50. Remove the C4 clutch backing plate from the case as shown in Figure 67.
51. Remove the C4 clutches both lined and steel from the case, as shown in Figure 67.
52. Remove the C4 clutch apply plate with the 3 return spring assemblies on it from the case as shown in Figure 67.
    Note: These three return spring assemblies just clip onto apply plate (See Figure 67).
53. Remove the C4 clutch apply piston from case by blowing compressed air into the C4 clutch passage as shown in Figure 68.
    Note: Figure 74 on Page 51 will identify the C4 clutch passage for the compressed air.
54. Remove the P1 planetary ring gear from the C3 clutches in the case (See Figure 69).

Continued on Page 50

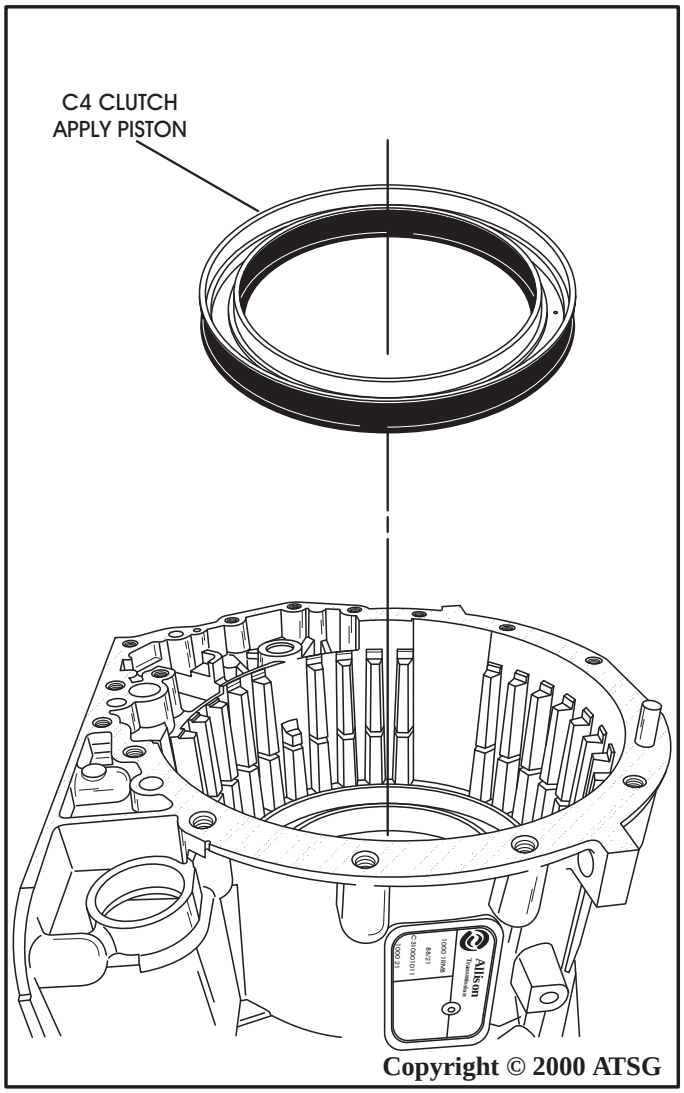

Figure 68

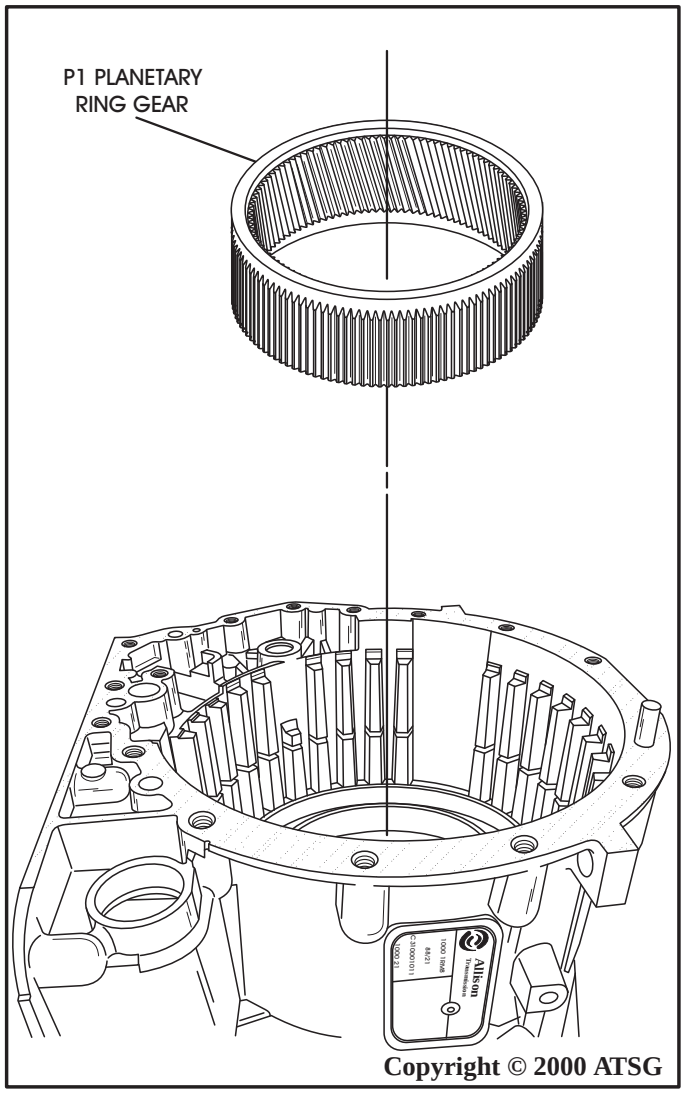

Figure 69

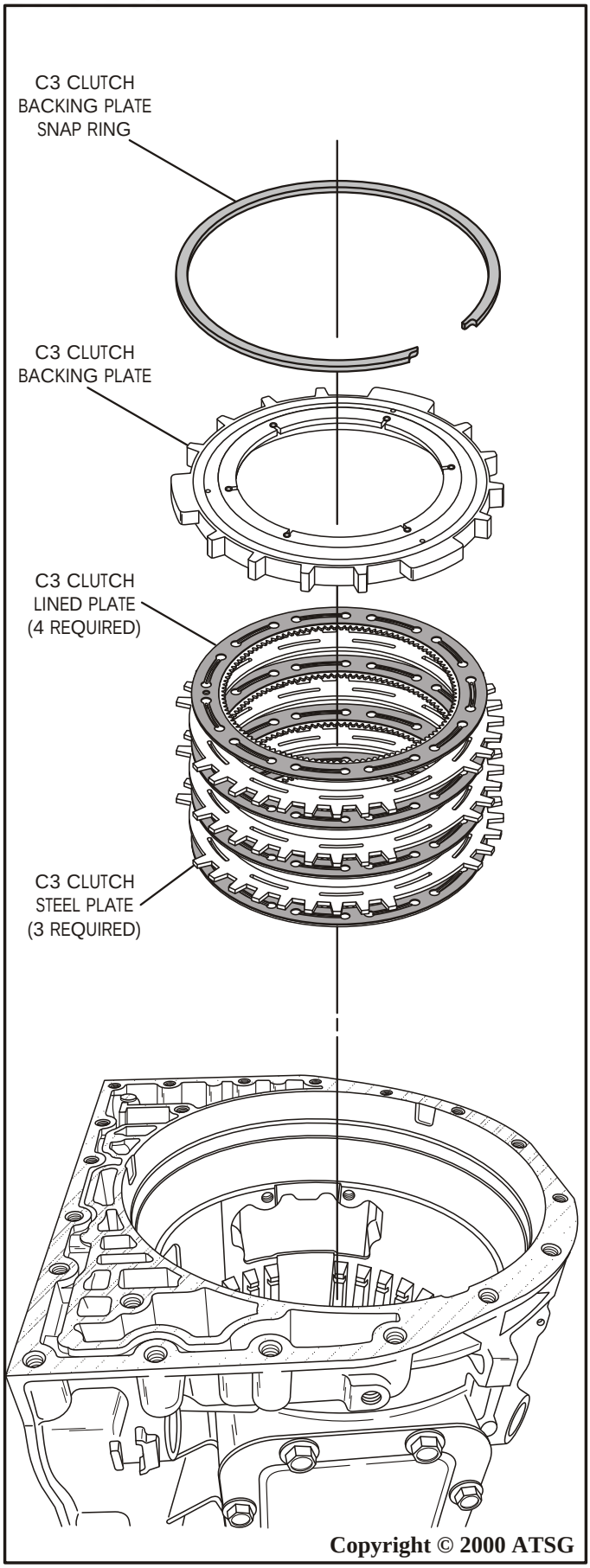

Figure 70

CONTINUED FROM PAGE 49

55. Rotate the transmission in fixture so that the front of the transmission case is facing up, as shown in Figure 70.
56. Remove the C3 clutch backing plate snap ring from the case, as shown in Figure 70.
57. Remove the C3 clutch backing plate from the case, as shown in Figure 70.
    Note: Inspect the three thrust washer surfaces that are pop riveted onto the backing plate as shown in Figure 71. These pieces are not serviced seperately.
58. Remove the C3 clutch plates both the lined and steel, as shown in Figure 70.
59. Remove the C3 clutch apply plate with the 3 return spring assemblies on it from the case, as shown in Figure 72.
    Note: These three return spring assemblies just clip onto apply plate (See Figure 72).
60. Remove the C3 clutch apply piston from case by blowing compressed air into the C3 clutch passage, as shown in Figure 73.
    Note: Figure 74 on Page 51 will identify the C3 clutch passage for the compressed air.
61. This ends transmission disassembly.

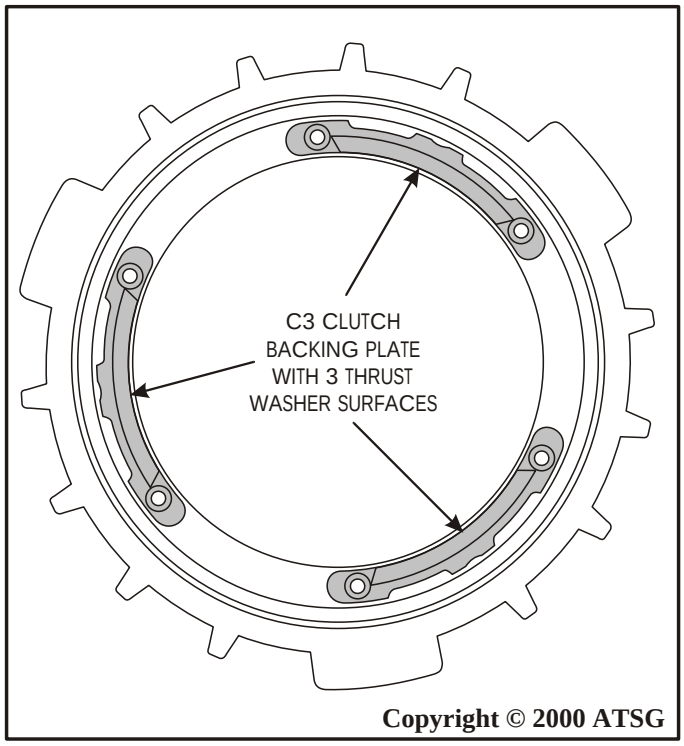

Figure 71

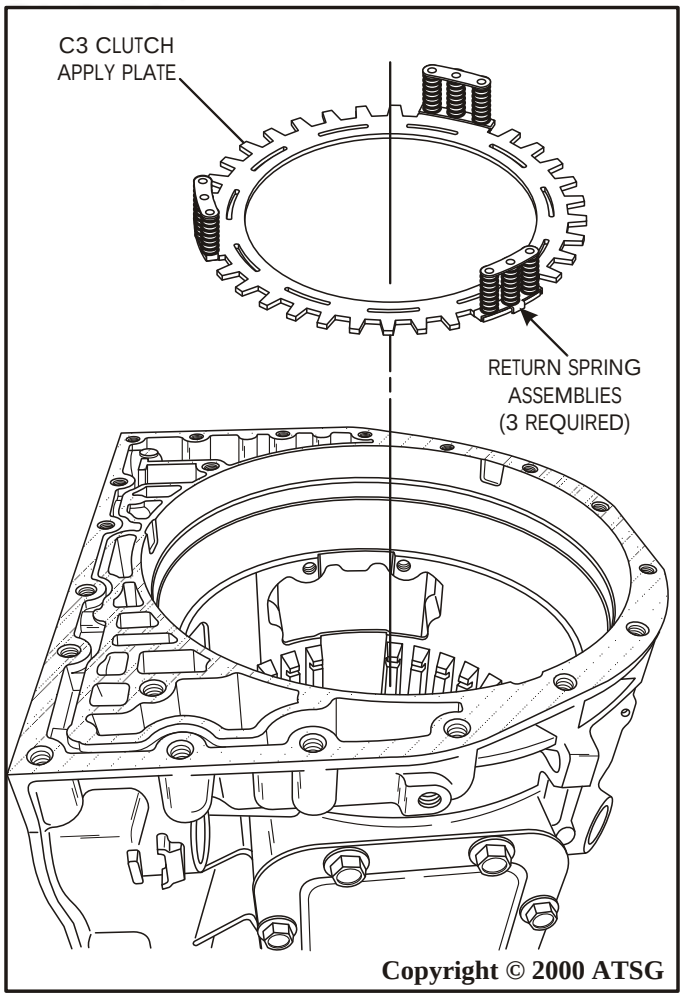

Figure 72

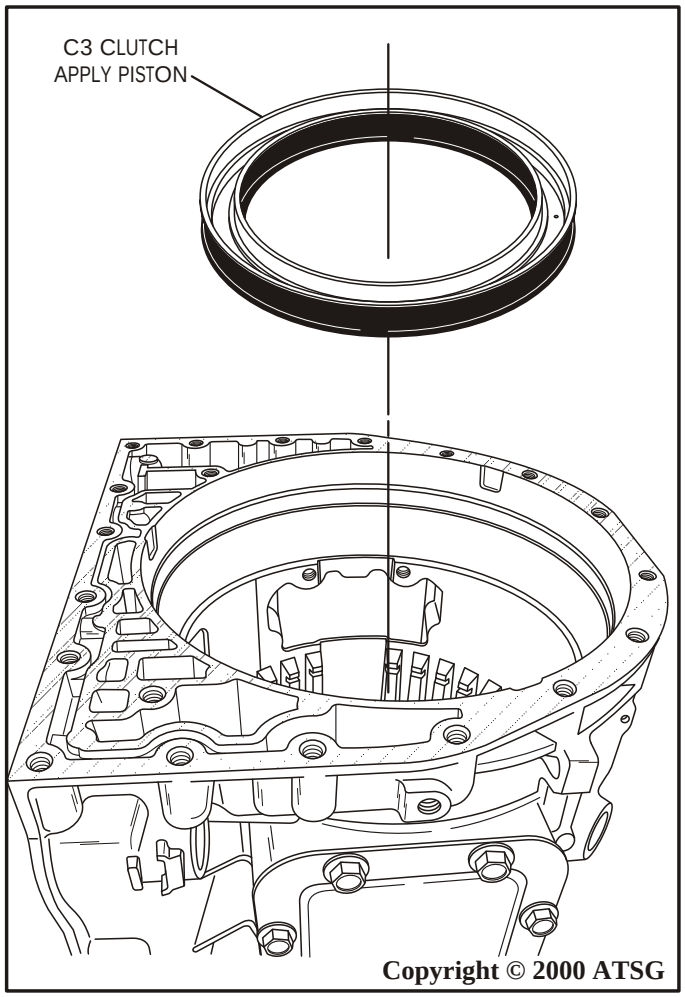

Figure 73

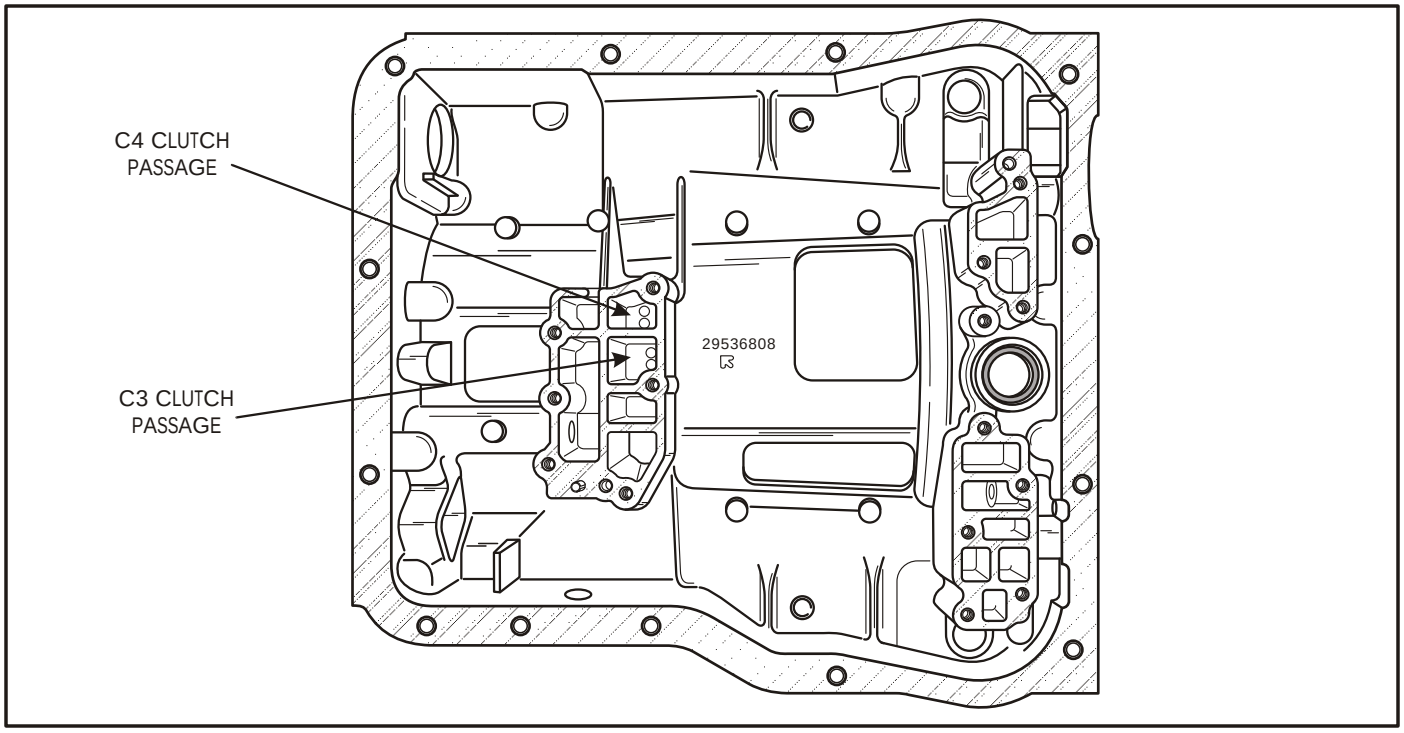

Figure 74

LINKAGE/PARK RELATED PARTS AND
EXTERNAL CASE PARTS EXPLODED VIEW

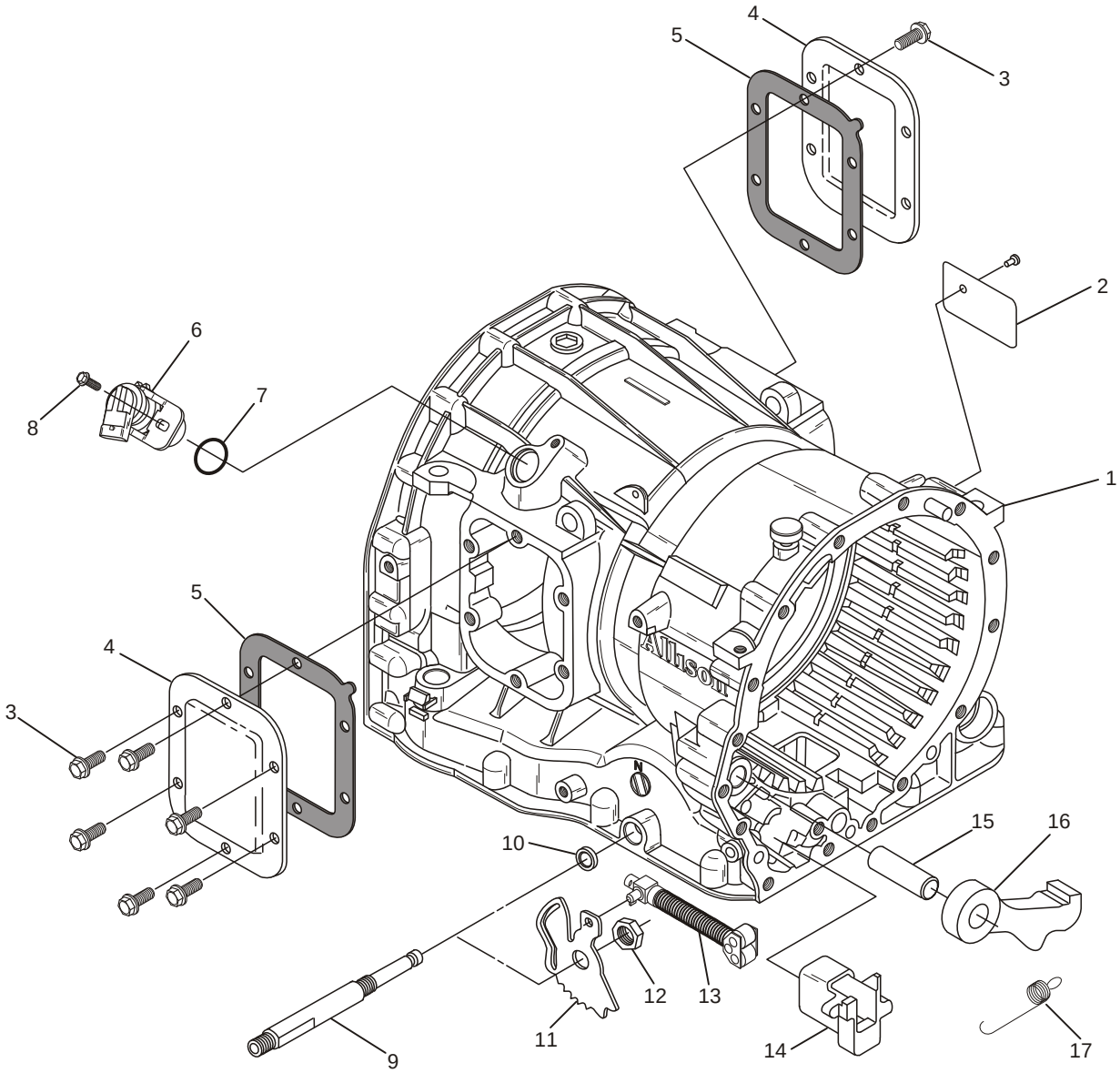

1. TRANSMISSION CASE ASSEMBLY.
2. IDENTIFICATION TAG AND RIVET.
3. PTO COVER RETAINING BOLTS, M10 X 1.5 X 20 (12 REQUIRED).
4. PTO COVER ASSEMBLY (2 REQUIRED).
5. PTO COVER TO CASE GASKET (2 REQUIRED).
6. TURBINE SHAFT SPEED SENSOR.
7. TURBINE SHAFT SPEED SENSOR "O" RING.
8. SPEED SENSOR RETAINING BOLT, M6 X 1.0 X 13 (1 REQUIRED).
9. MANUAL SHAFT ASSEMBLY.
10. MANUAL SHAFT SEAL.
11. MANUAL DETENT LEVER.
12. MANUAL DETENT LEVER FLANGE NUT.
13. PARKING PAWL APPLY ROD ASSEMBLY.
14. PARKING PAWL APPLY ROD GUIDE.
15. PARKING PAWL SUPPORT SHAFT.
16. PARKING PAWL ASSEMBLY.
17. PARKING PAWL RETURN SPRING.

Copyright © 2000 ATSG

Figure 75

COMPONENT REBUILD

TRANSMISSION CASE

1. Remove the parking linkage as necessary and install a new manual linkage seal into the case bore, as shown in Figure 75.
2. Inspect the C3 clutch molded apply piston and replace as necessary (See Figure 76).
3. Lubricate C3 clutch piston with a small amount of TransJelä, and install into the case bore, as shown in Figure 76.
4. Install the three return spring assemblies onto the wide tabs of C3 apply plate and install the apply plate assembly on top of the piston, as shown in Figure 78.
5. Inspect the three washer surfaces that are pop riveted onto the C3 clutch backing plate, as shown in Figure 77.
   Note: These 3 pieces and rivets are available as service items. Replace as necessary.

Continued on Page 54

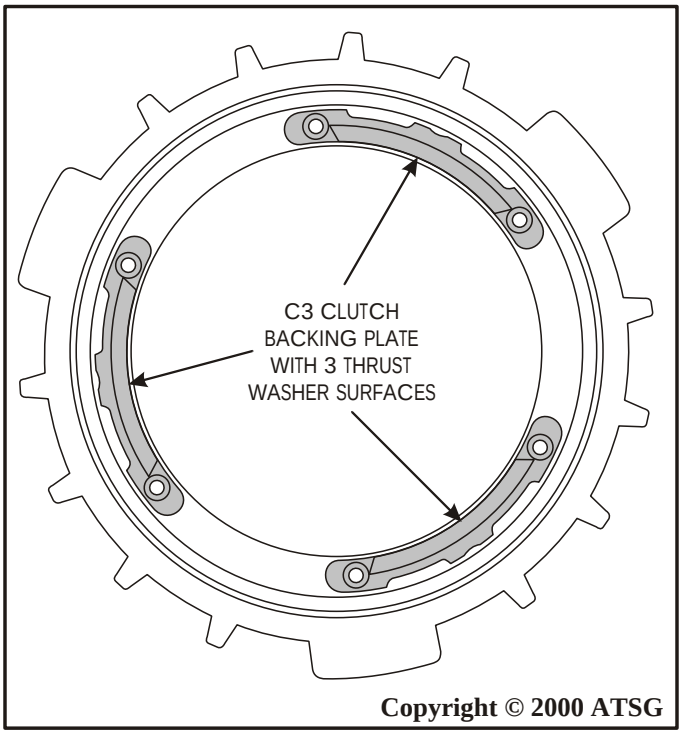

Figure 77

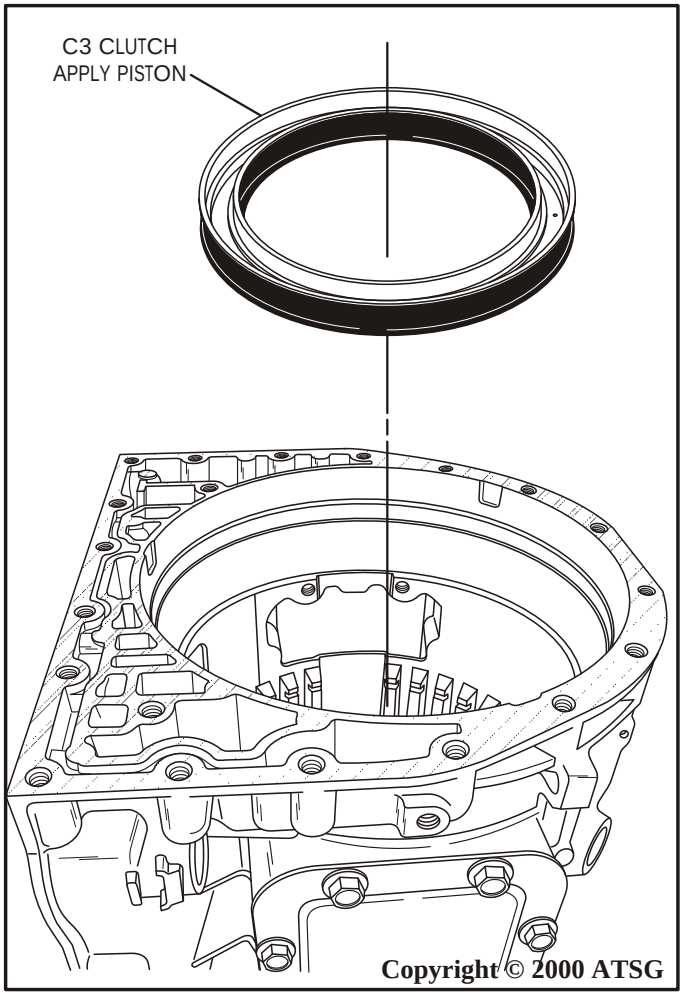

Figure 76

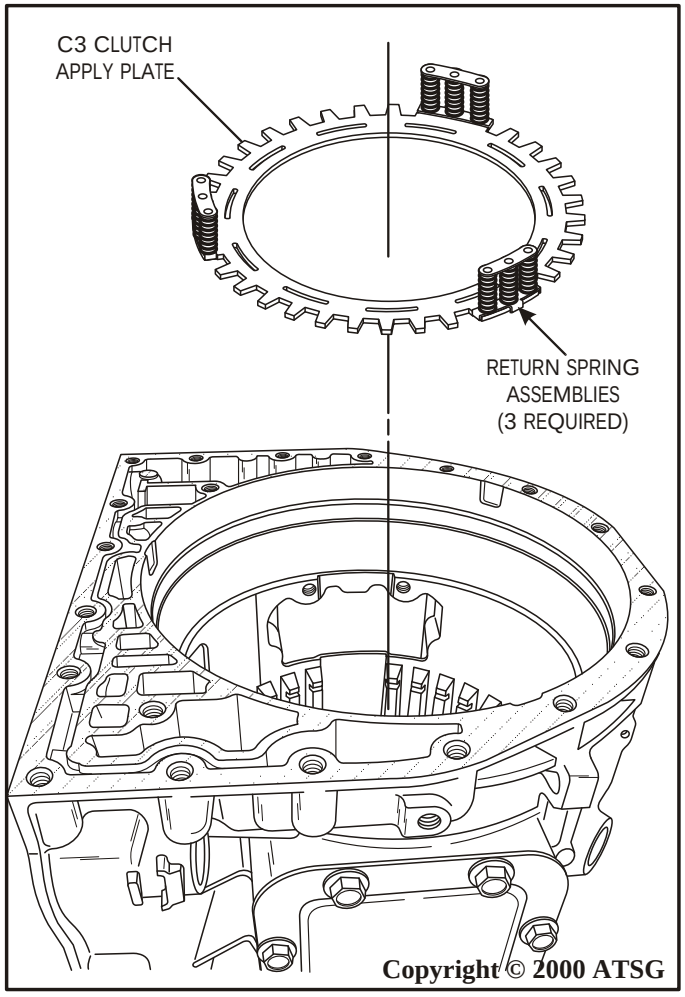

Figure 78

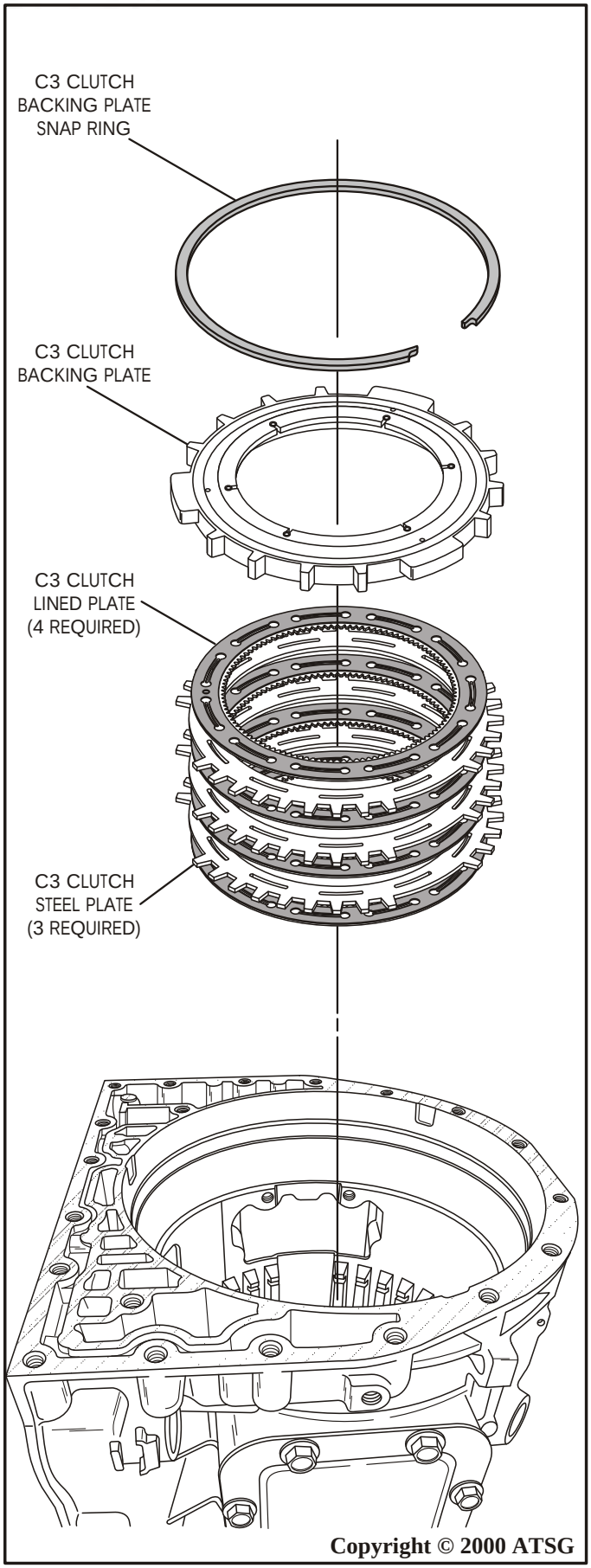

Figure 79

CONTINUED FROM PAGE 53

6. Install C3 clutch pack beginning with a lined plate on top of the apply plate and alternating with a steel plate until you have installed four lined plates and three steel plates, as shown in Figure 79.
7. Install the pre-inspected C3 backing plate with the 3 washer surfaces facing down, as shown in Figure 79.
8. Install the C3 clutch backing plate snap ring in the case groove (See Figure 79).
9. Check the C3 clutch clearance using a feeler gage, through the front opening in transmission case, as shown in Figure 80.
10. Correct clearance should be .040"-.060"
    Note: There are no selectives. If clearance is not correct, there is a mis-assembly.
11. Rotate the transmission in the fixture so that the rear of the transmission is facing up, as shown in Figure 80.

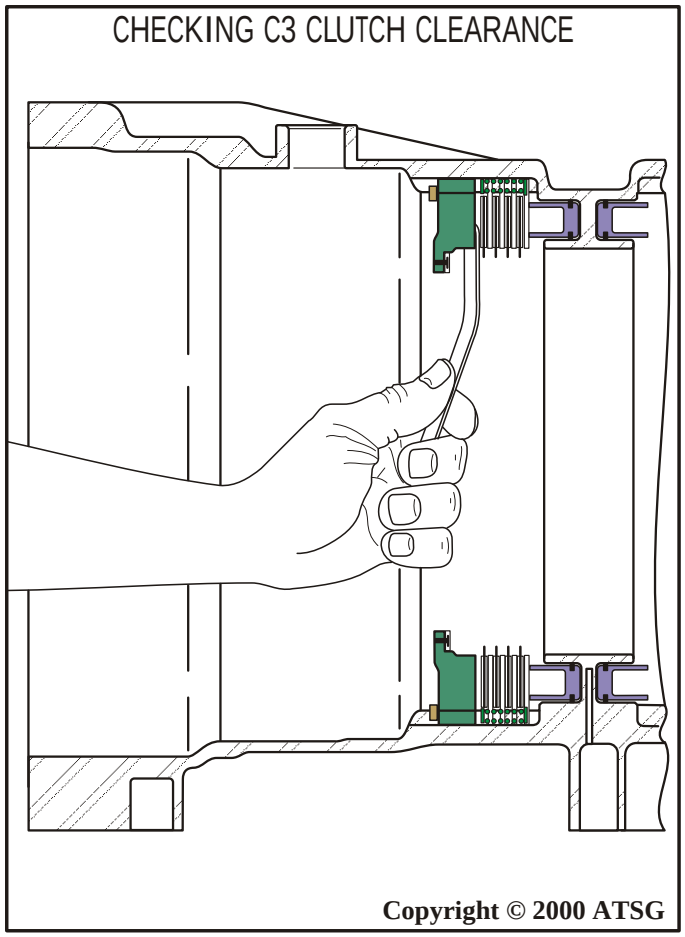

Figure 80

https://truckmanualshub.com/

12. Install the P1 planetary ring gear into the case and engaging into the C3 lined plates until it is fully seated against the washer surfaces on the C3 backing plate (See Figure 81).
13. The transmission case is now ready for the final assembly process.
    Caution: Do not rotate the transmission from this position as the ring gear may fall out and create damage or injury.

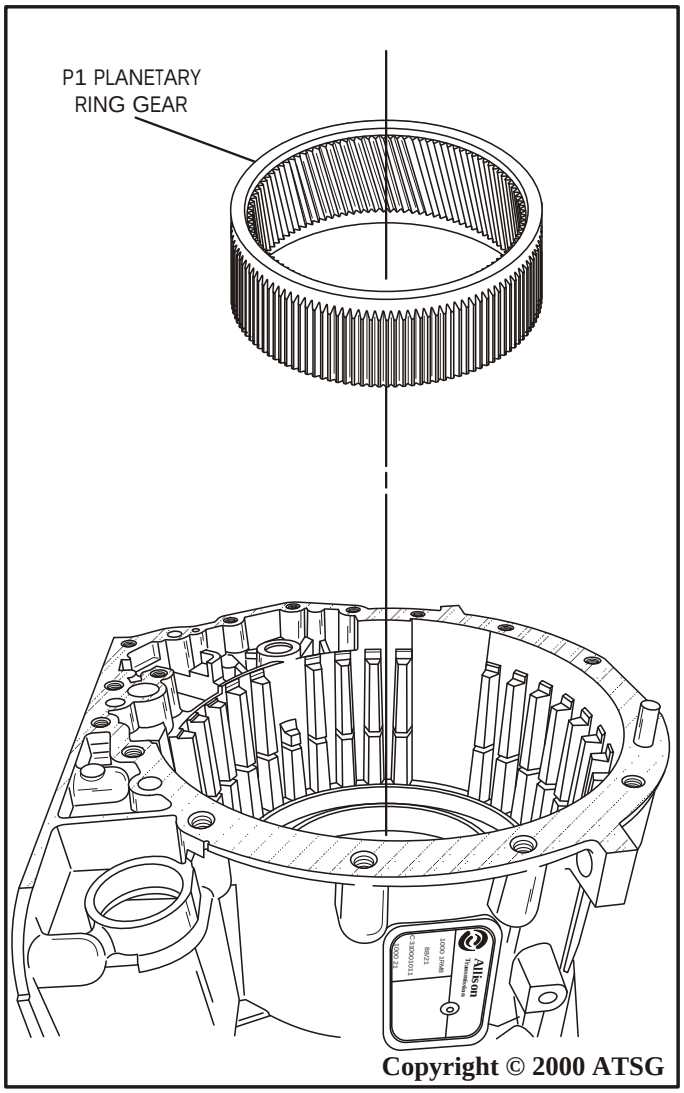

Copyright © 2000 ATSG

Figure 81

COMPONENT REBUILD (Cont'd)

OIL PUMP ASSEMBLY

1. Remove the bolts from inside the bell housing that are shaded, as shown in Figure 82, so that the oil pump assembly is seperated from the bell housing (See Figure 82).

Continued on Page 57

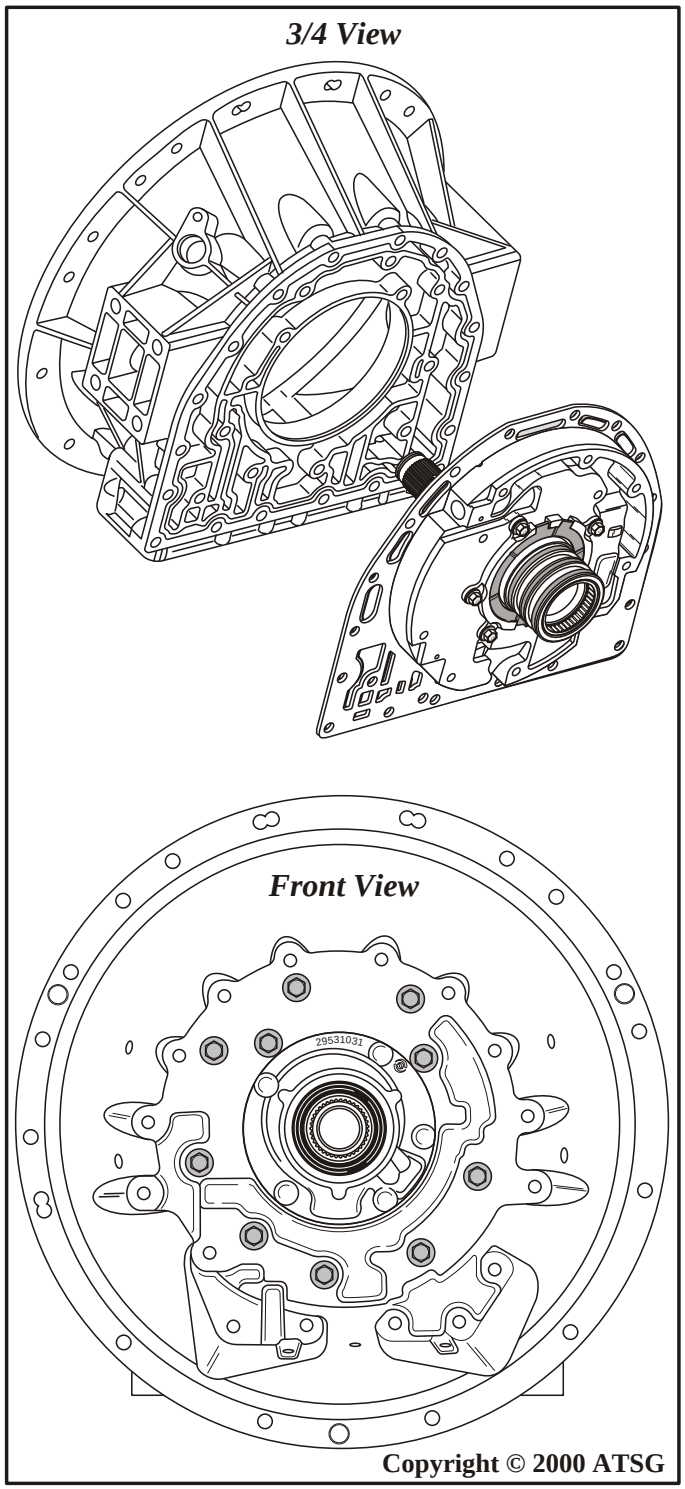

Copyright © 2000 ATSG

Figure 82

https://truckmanualshub.com/

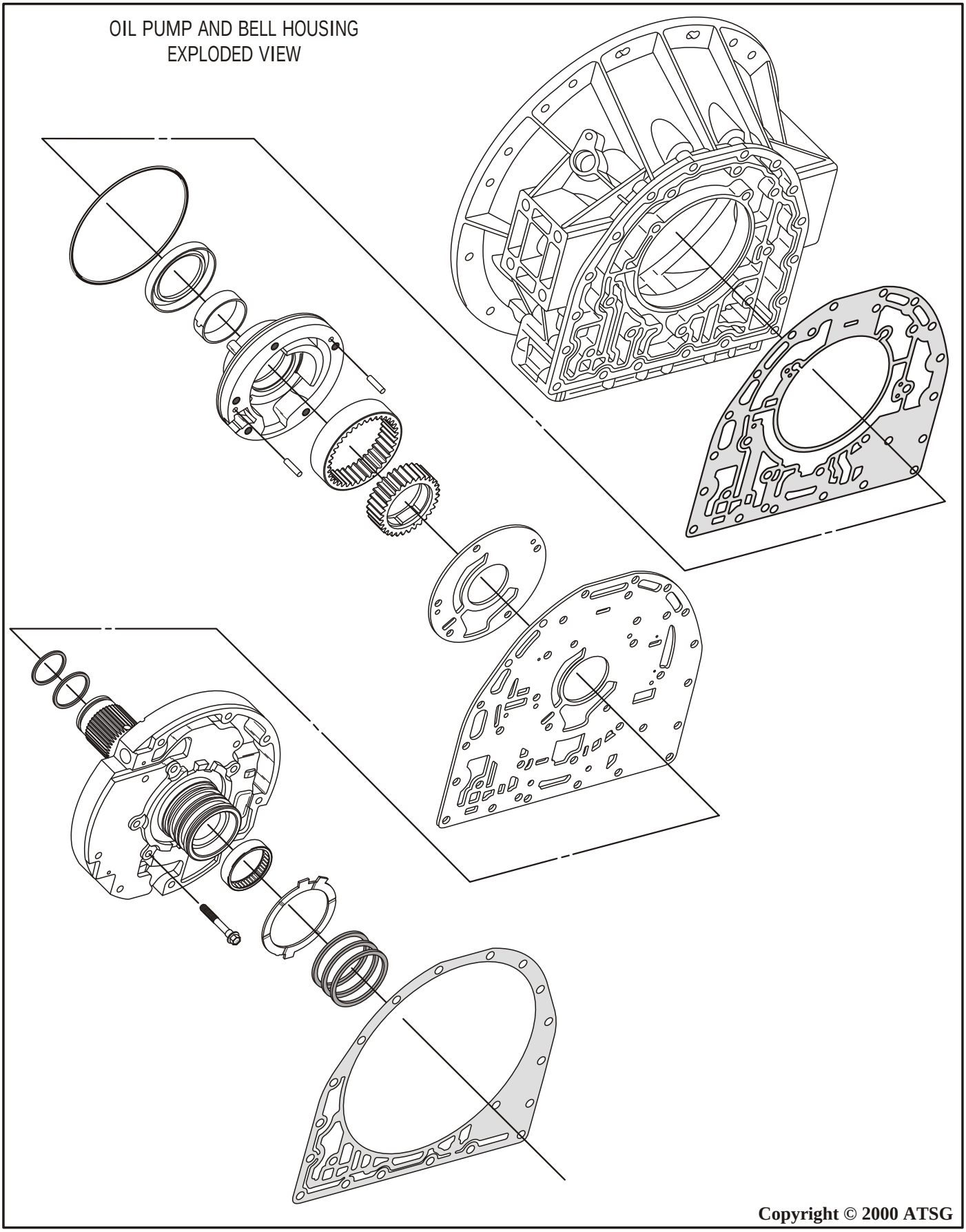

Figure 83

https://truckmanualshub.com/

CONTINUED FROM PAGE 55

2. Remove the five oil pump cover to oil pump retaining bolts to disassemble the oil pump, as shown in Figure 84.
3. Disassemble the oil pump and oil pump cover using Figures 85 and 86 as a guide.
4. Remove and discard the pump spacer plate to bell housing gasket and the pump spacer plate to case gasket (See Figure 83, 85 and 86).
5. Remove and discard the 3 sealing rings on the back side of pump cover (See Figure 85).
6. Remove and discard the 2 sealing rings on the stator shaft in front (See Figure 85).
7. Remove and discard the front pump converter metal clad seal from the pump body, as shown in Figure 85.
8. Inspect all oil pump parts thoroughly for any wear and/or damage.
9. Clean all oil pump and cover parts thoroughly and dry with compressed air.

Continued on Page 60

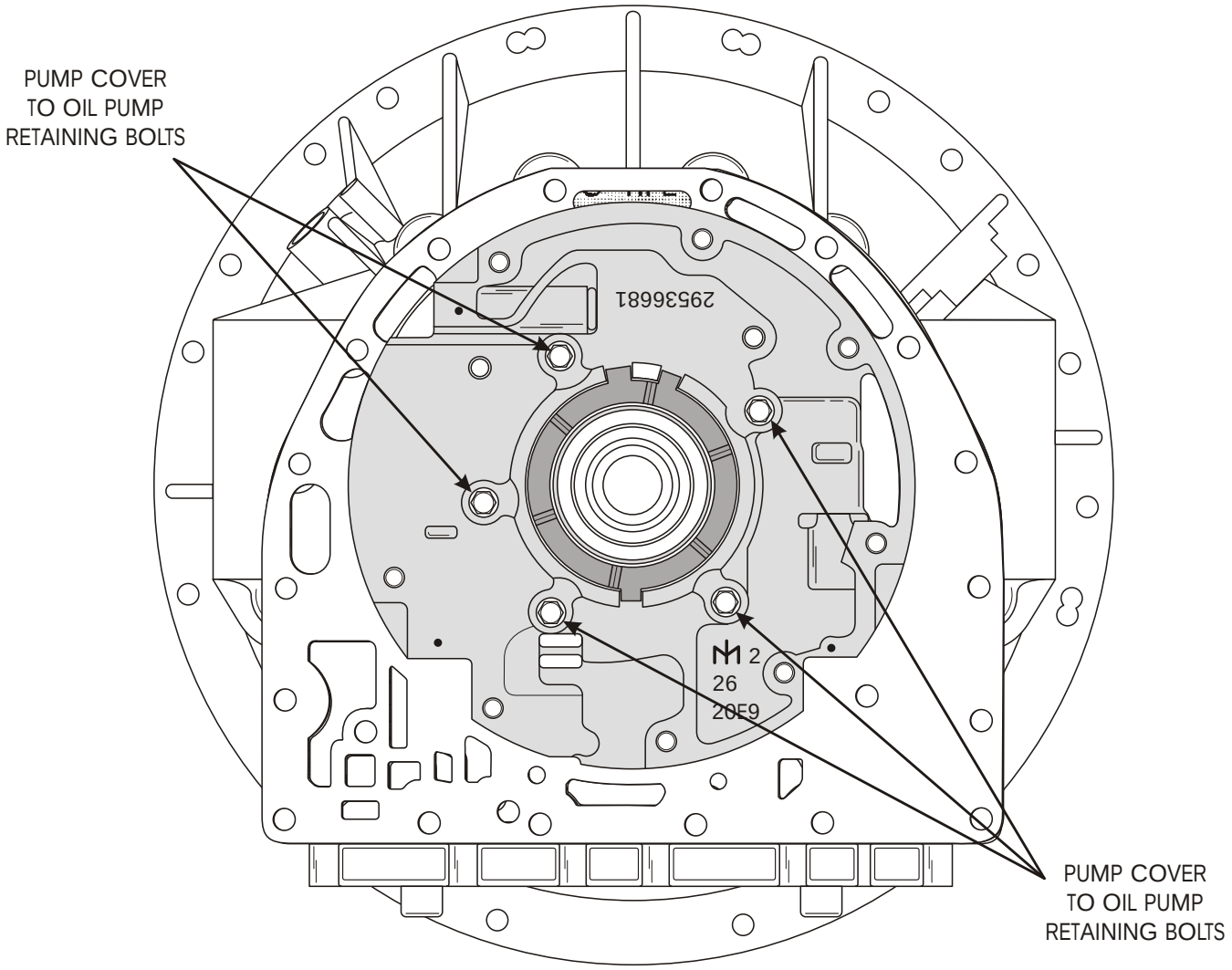

Copyright © 2000 ATSG

Figure 84

https://truckmanualshub.com/

OIL PUMP ASSEMBLY EXPLODED VIEW

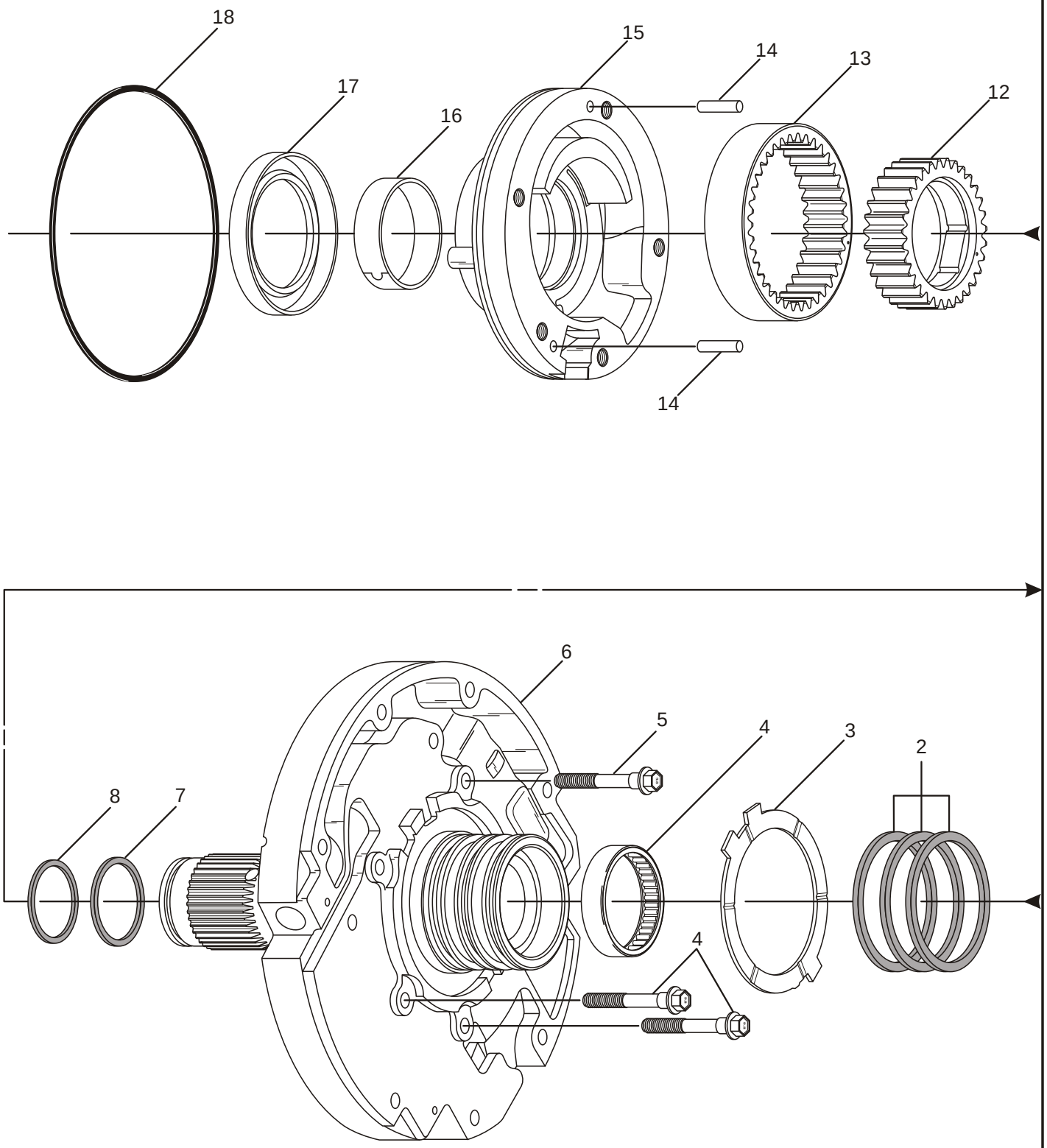

Copyright © 2000 ATSG

Figure 85

https://truckmanualshub.com/

OIL PUMP ASSEMBLY EXPLODED VIEW

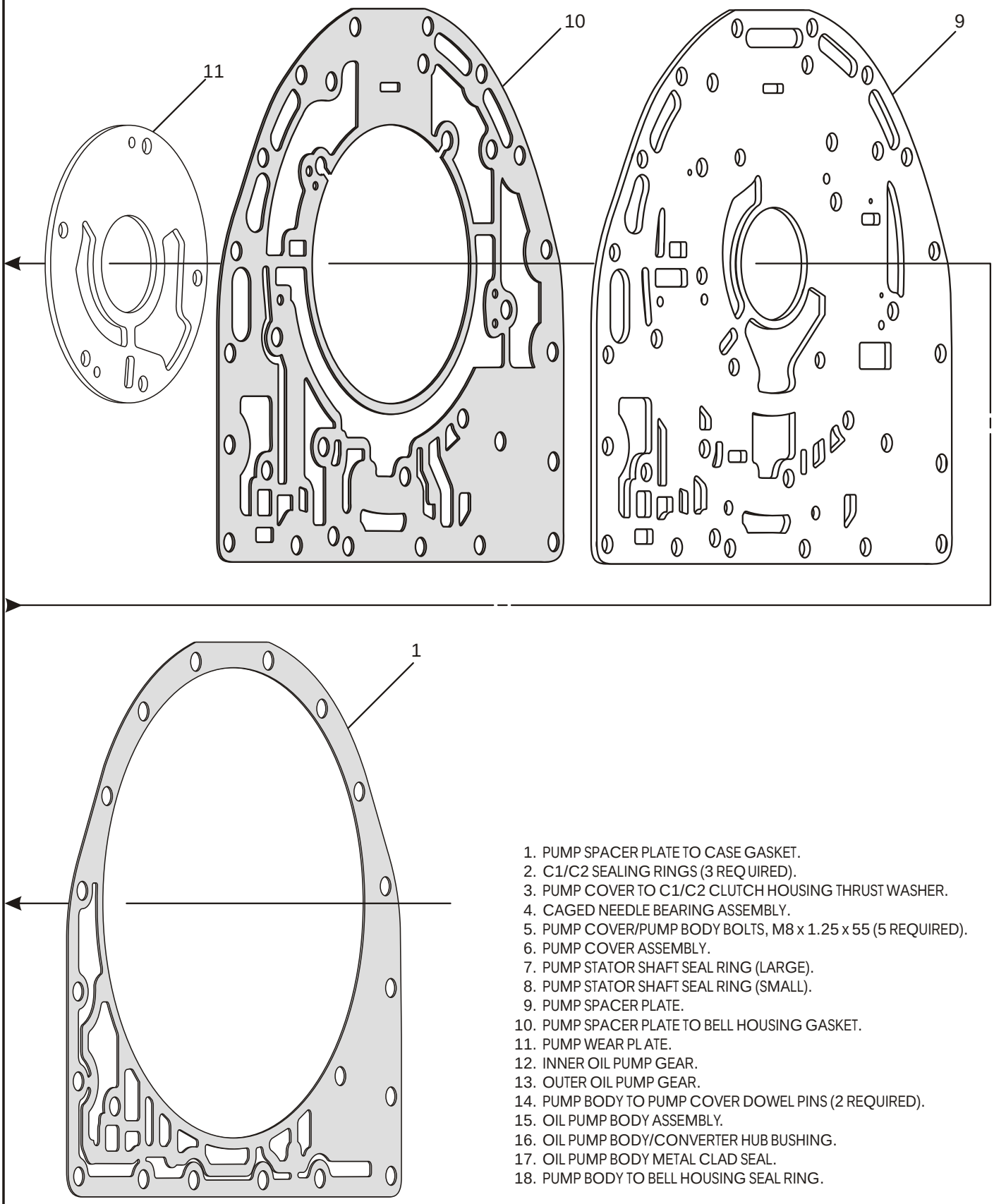

1. PUMP SPACER PLATE TO CASE GASKET.
2. C1/C2 SEALING RINGS (3 REQUIRED).
3. PUMP COVER TO C1/C2 CLUTCH HOUSING THRUST WASHER.
4. CAGED NEEDLE BEARING ASSEMBLY.
5. PUMP COVER/PUMP BODY BOLTS, M8 x 1.25 x 55 (5 REQUIRED).
6. PUMP COVER ASSEMBLY.
7. PUMP STATOR SHAFT SEAL RING (LARGE).
8. PUMP STATOR SHAFT SEAL RING (SMALL).
9. PUMP SPACER PLATE.
10. PUMP SPACER PLATE TO BELL HOUSING GASKET.
11. PUMP WEAR PLATE.
12. INNER OIL PUMP GEAR.
13. OUTER OIL PUMP GEAR.
14. PUMP BODY TO PUMP COVER DOWEL PINS (2 REQUIRED).
15. OIL PUMP BODY ASSEMBLY.
16. OIL PUMP BODY/CONVERTER HUB BUSHING.
17. OIL PUMP BODY METAL CLAD SEAL.
18. PUMP BODY TO BELL HOUSING SEAL RING.

Copyright © 2000 ATSG

Figure 86

https://truckmanualshub.com/

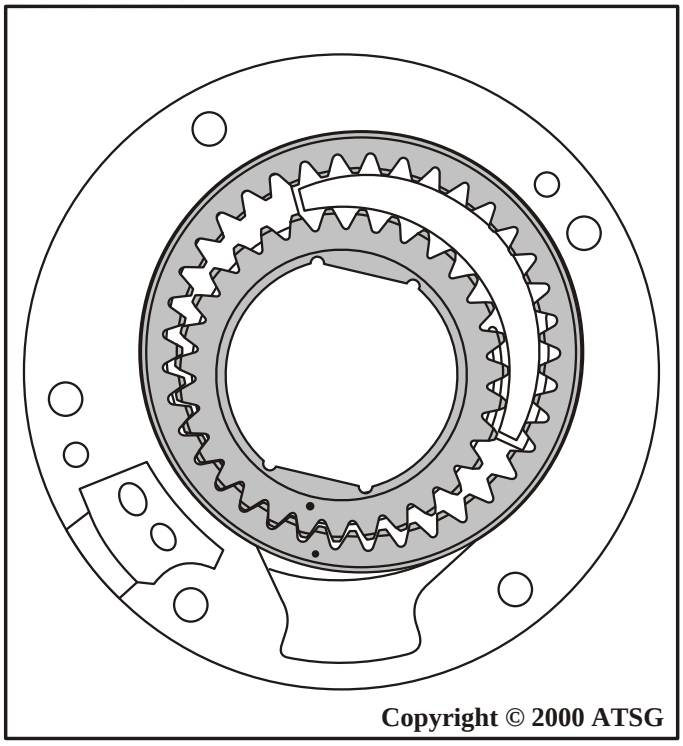

Figure 87

CONTINUED FROM PAGE 57

10. Install new front pump body bushing into the pump body as necessary, using proper bushing driver (See Figure 88).
11. Install a new front pump body metal clad seal into pump body using the proper seal driver. Refer to Figure 88.
12. Install new pump body to bell housing "O" ring seal in pump body groove, and lubricate using a small amount of TransJelä. (See Figure 88).
13. Lubricate the inner and outer pump gears with transmission fluid and install in the pump body with marks facing up, as shown in Figure 87.
14. Install the two dowel pins into the pump body, if they were removed, as shown in Figure 88.
15. Assemble the valves, springs, bore plugs and retainers into the pump cover ***exactly*** as they are shown in Figure 89.
    Note: Lubricate all valves in the pump cover with LubeGard® spray lubricant.

Continued on Page 62

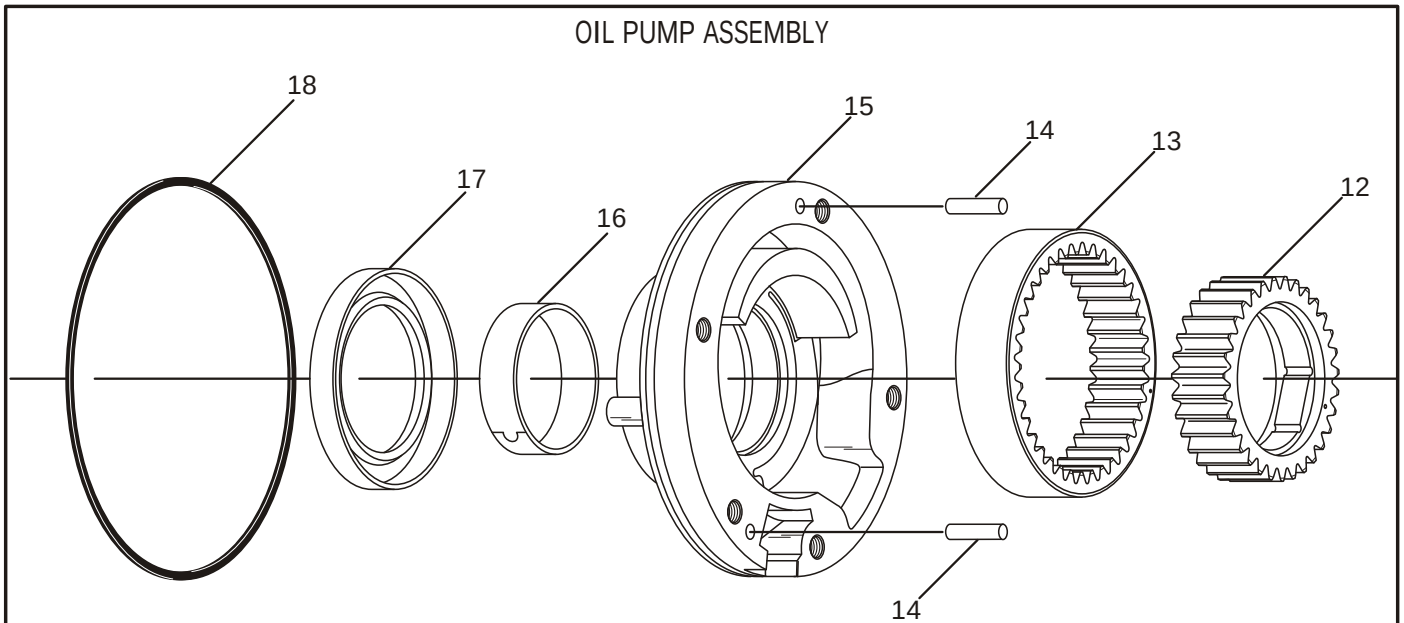

Figure 88

OIL PUMP COVER ASSEMBLY
VALVE AND SPRING IDENTIFICATION

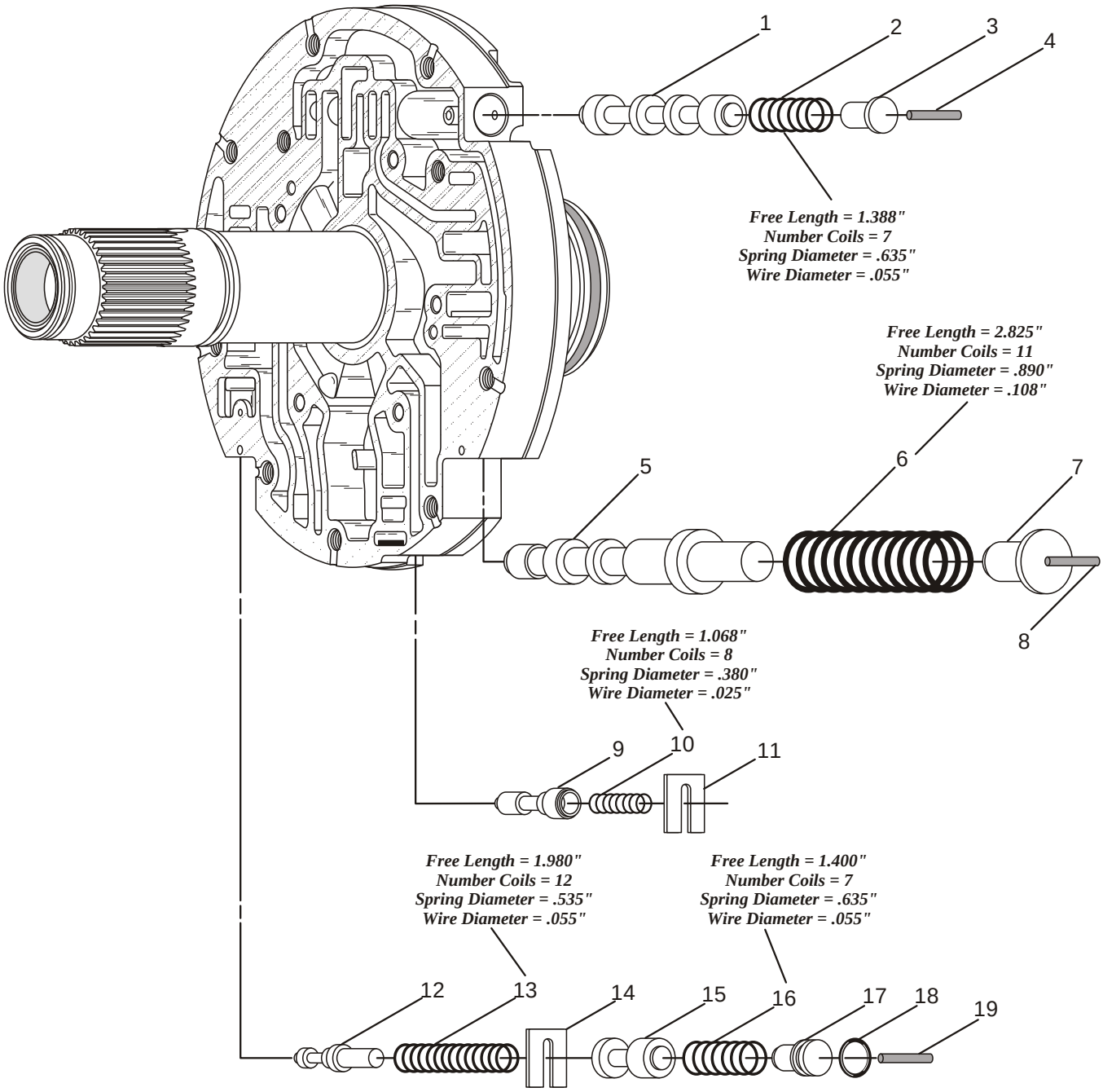

1. CONVERTER FLOW VALVE.
2. CONVERTER FLOW VALVE SPRING.
3. CONVERTER FLOW VALVE STOP.
4. CONVERTER FLOW VALVE STOP RETAINING PIN.
5. MAIN PRESSURE REGULATOR VALVE.
6. MAIN PRESSURE REGULATOR VALVE SPRING.
7. PRESSURE REGULATOR VALVE STOP.
8. PRESSURE REGULATOR VALVE STOP RETAINING PIN.
9. CLUTCH BACKFILL VALVE.
10. CLUTCH BACKFILL VALVE SPRING.
11. CLUTCH BACKFILL VALVE RETAINER.
12. CONVERTER RELIEF VALVE.
13. CONVERTER RELIEF VALVE SPRING.
14. CONVERTER RELIEF VALVE SPRING RETAINER.
15. LUBE REGULATOR VALVE.
16. LUBE REGULATOR VALVE SPRING.
17. LUBE REGULATOR VALVE SPRING STOP.
18. LUBE REGULATOR VALVE STOP "O" RING.
19. LUBE REGULATOR VALVE STOP RETAINING PIN.

Copyright © 2000 ATSG

Figure 89

CONTINUED FROM PAGE 60

16. Install the C1/C2 clutch drum thrust washer on the pump cover and retain with a small amount of TransJelä (See Figure 90).
17. Install three new C1/C2 clutch drum sealing rings as shown in Figure 90.
    Note: Ensure that the sealing rings will rotate freely in the ring grooves (See Figure 90).
18. Install two new sealing rings onto the stator shaft in their proper grooves (See Figure 90).
    Note: Ensure that the sealing rings will rotate freely in their ring grooves (See Figure 90
19. Inspect the caged needle bearing and replace as necessary (See Figure 90).
20. Place the completed oil pump cover assembly on a flat work surface with the stator shaft facing up, as shown in Figure 91.
21. Install the bell housing to pump cover spacer plate onto the pump cover (See Figure 91).
22. Install the spacer plate to bell housing gasket on top of the spacer plate (See Figure 91).
23. Install the oil pump wear plate on top of spacer plate, as shown in Figure 91.
24. Install the pre-assembled oil pump assembly on top of the wear plate as shown in Figure 92.

Continued on Page 64

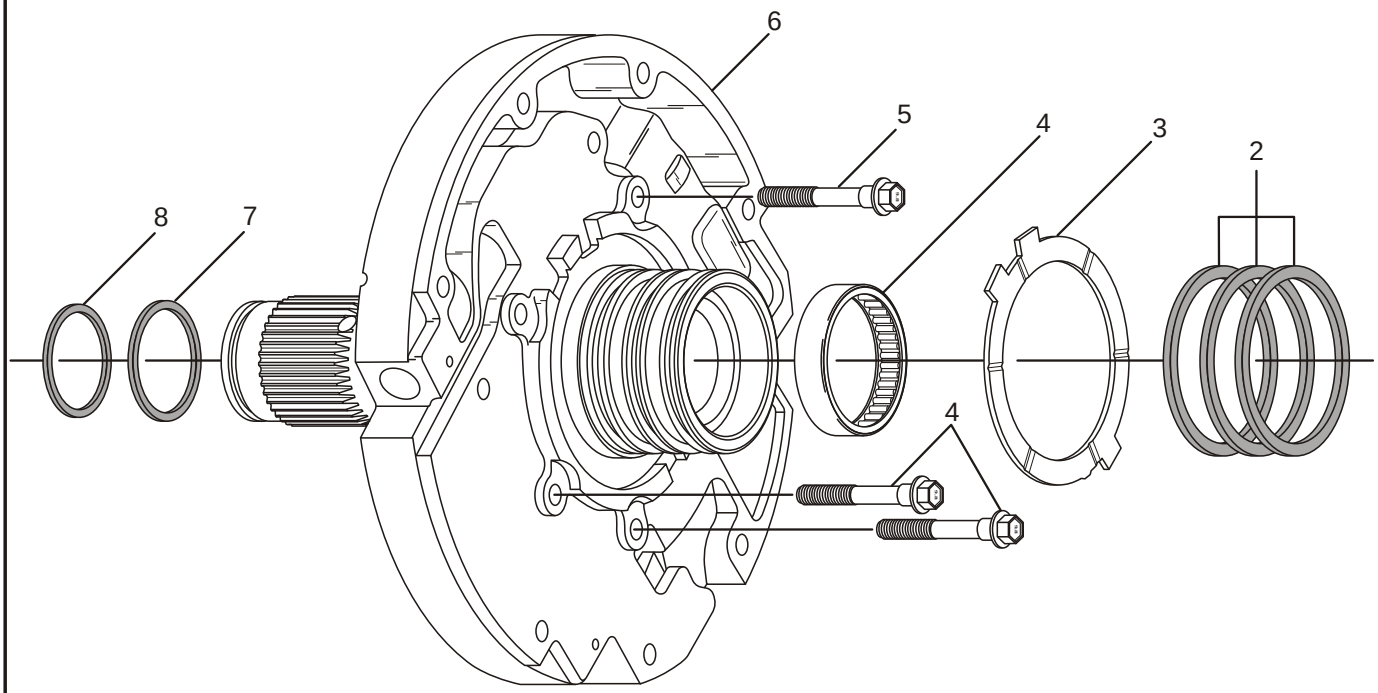

1. PUMP SPACER PLATE TO CASE GASKET.
2. C1/C2 SEALING RINGS (3 REQUIRED).
3. PUMP COVER TO C1/C2 CLUTCH HOUSING THRUST WASHER.
4. CAGED NEEDLE BEARING ASSEMBLY.
5. PUMP COVER/PUMP BODY BOLTS, M8 x 1.25 x 55 (5 REQUIRED).
6. PUMP COVER ASSEMBLY.
7. PUMP STATOR SHAFT SEAL RING (LARGE).

Copyright © 2000 ATSG

Figure 90

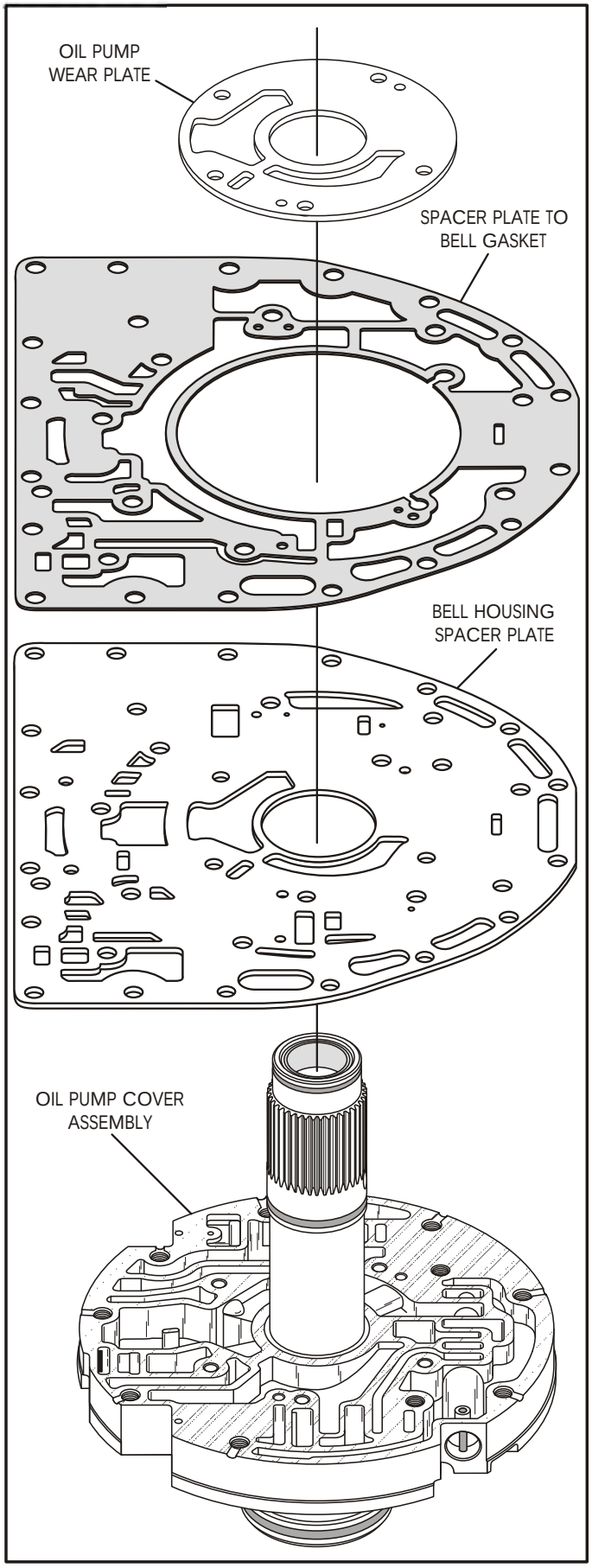

Figure 91

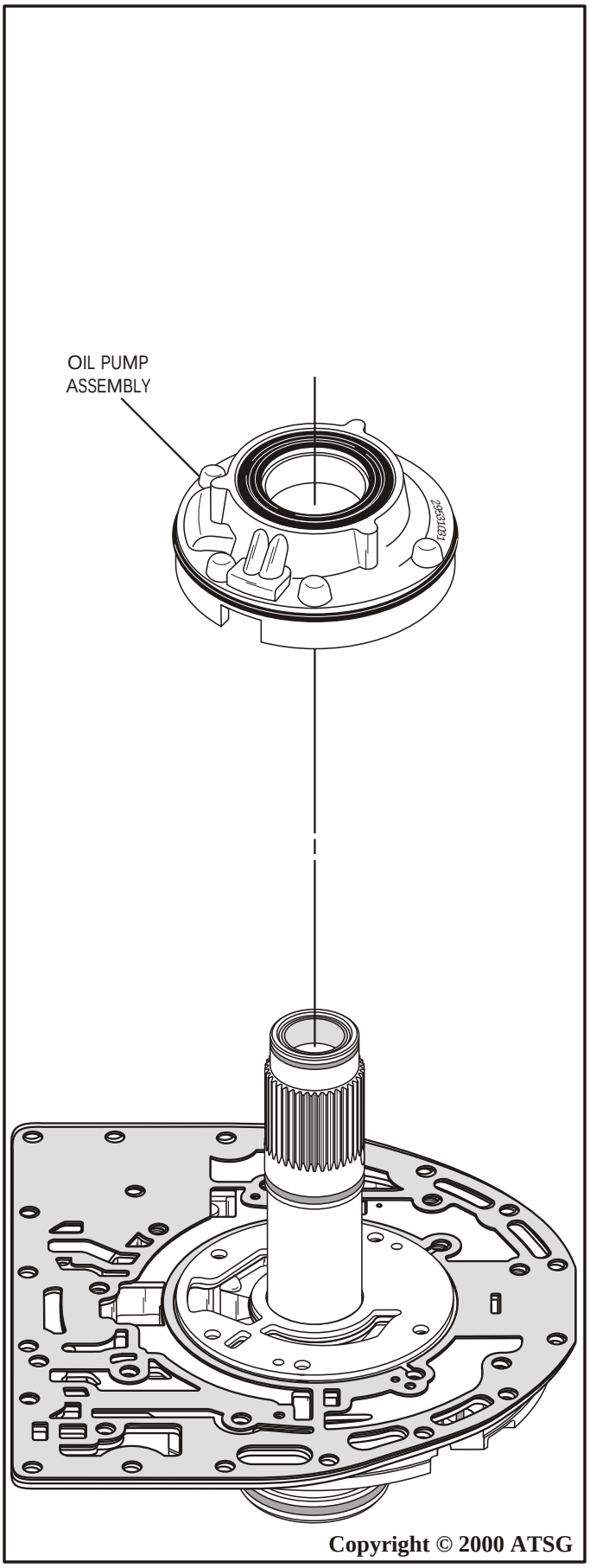

Copyright © 2000 ATSG

Figure 92

https://truckmanualshub.com/

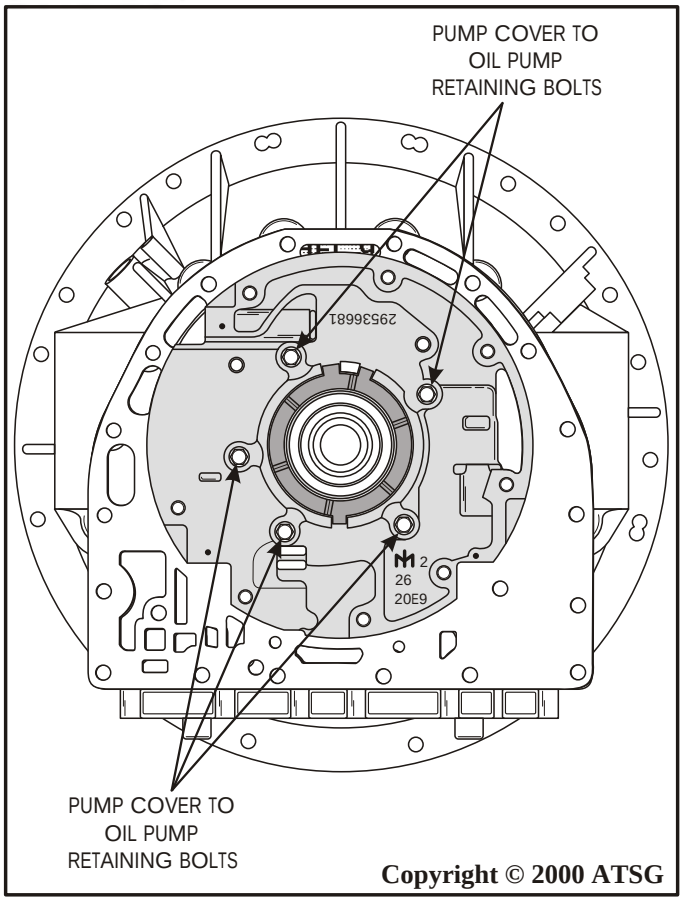

Figure 93

CONTINUED FROM PAGE 62

25. Install the 5 required pump cover to oil pump bolts, size identified in Figure 95 and location is identified in Figure 93, and torque the bolts to 27 Nm (20 ft.lb.).
26. Assemble the completed oil pump and cover assembly to the bell housing (See Figure 94). ***Note: There are currently four different bell housings available. Refer to Figures 98 & 99 for the various models.***
27. Install the 10 required bell housing to pump cover bolts, size identified in Figure 95 and location is identified in Figure 96, and torque the bolts to 43 Nm (32 ft.lb.). ***Note: Notice in Figure 95 that these 10 bolts have a required seal on the bolt. Ensure that new seals are installed.***
28. Set completed bell housing and pump assembly aside for the final assembly process, as shown in Figure 97.

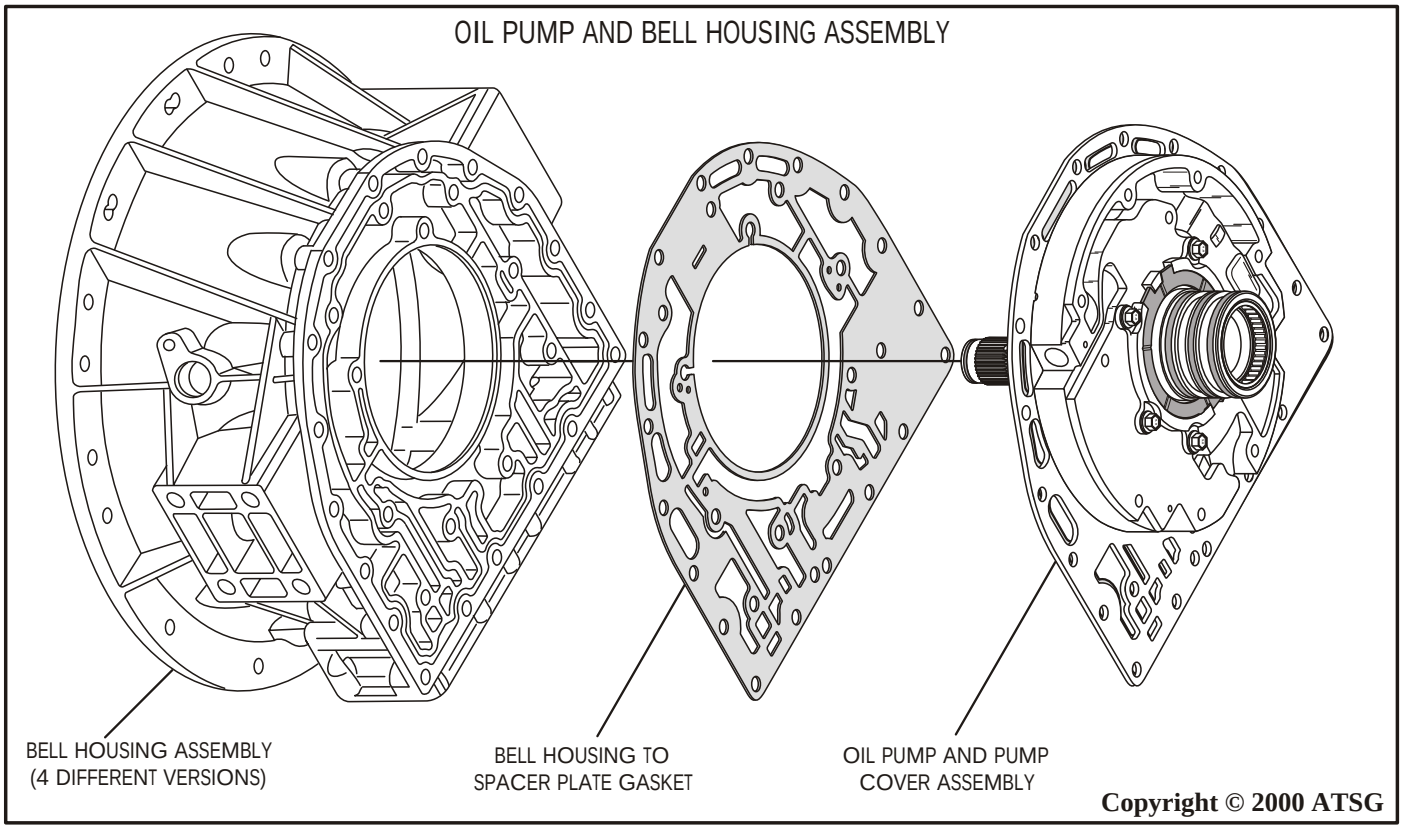

Figure 94

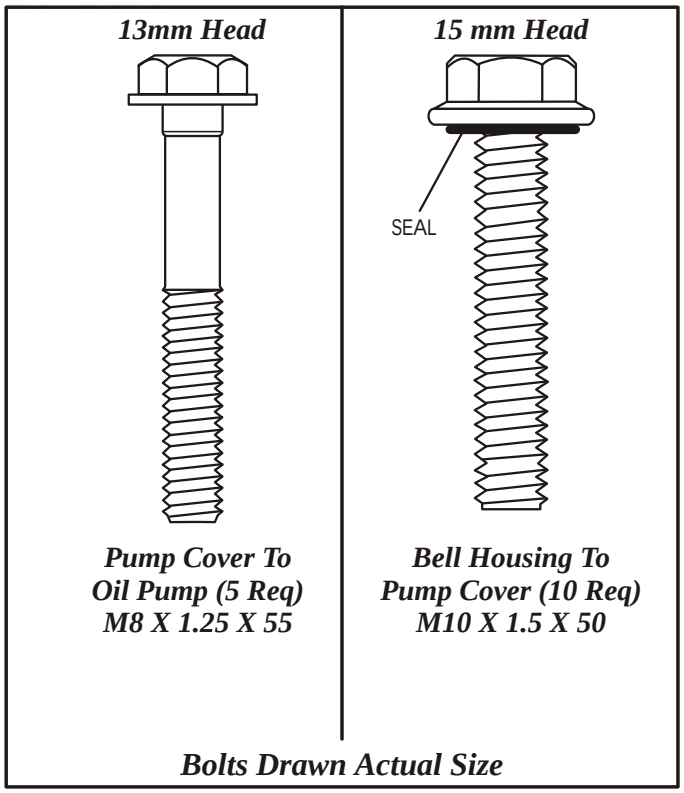

Figure 95

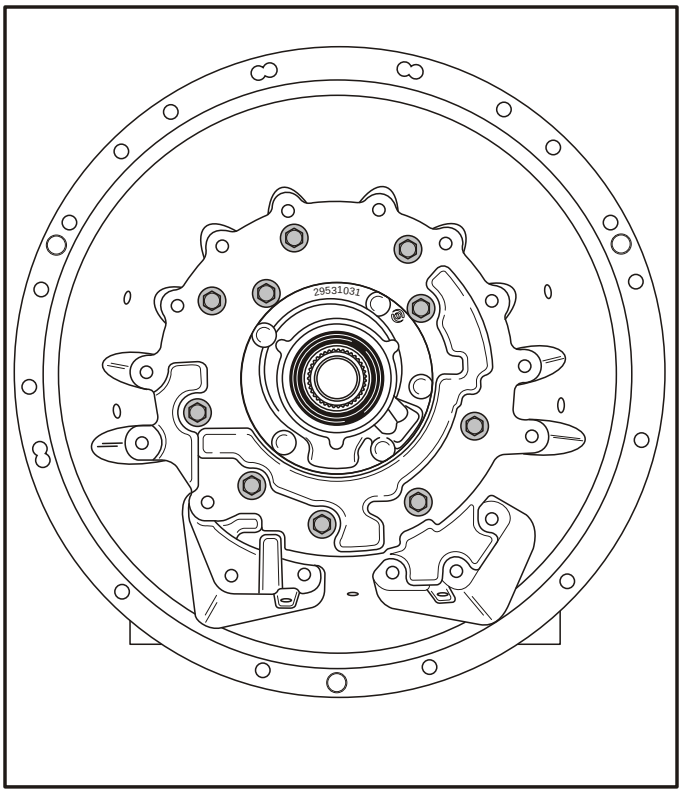

Figure 96

COMPLETED BELL HOUSING AND PUMP ASSEMBLY

CAUTION: THERE ARE FOUR DIFFERENT BELL HOUSING CONFIGURATIONS REFER TO FIGURES 98 AND 99

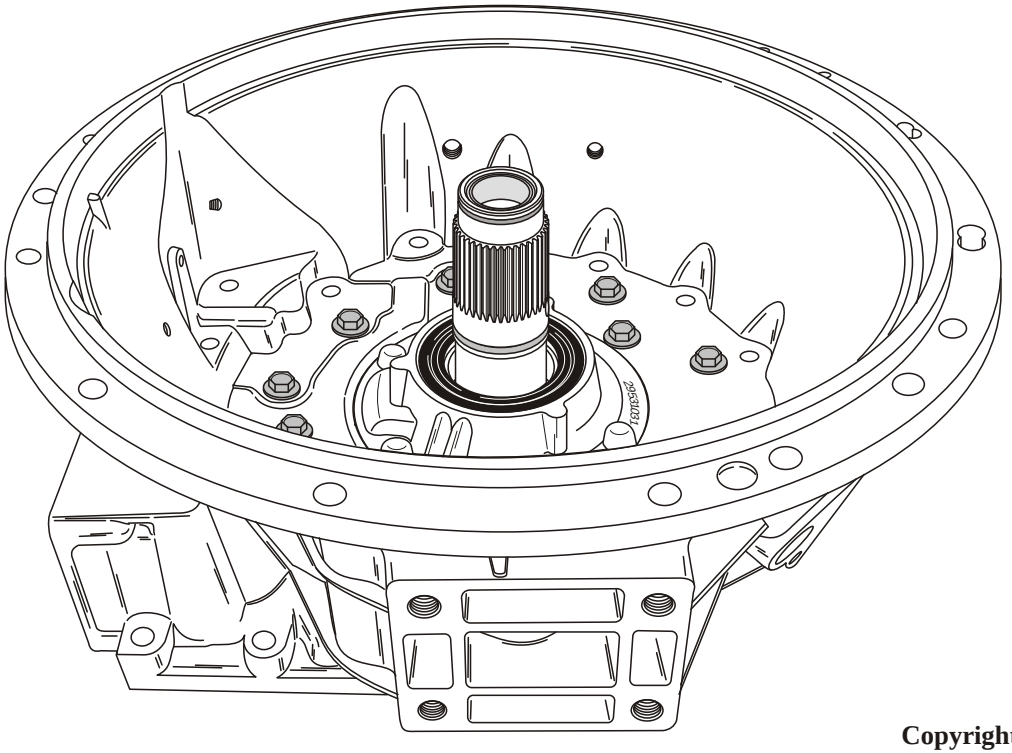

Copyright © 2000 ATSG

Figure 97

SAE NUMBER 3 BELL HOUSING WITH INTEGRAL FILTER AND COOLER PORTS

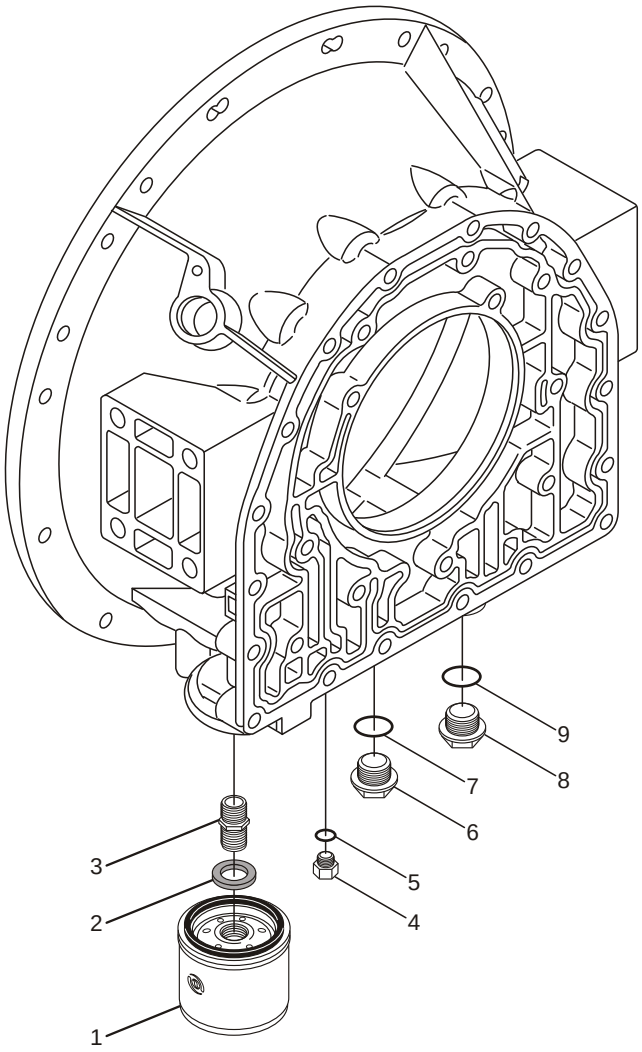

1. MAIN CONTROL FILTER ASSEMBLY.
2. MAIN CONTROL FILTER MAGNET.
3. MAIN CONTROL FILTER ADAPTER TUBE.
4. MAIN LINE PRESSURE TAP PLUG.
5. MAIN LINE PRESSURE PLUG "O" RING.
6. TO COOLER SHIPPING PLUG.
7. TO COOLER SHIPPING PLUG "O" RING.
8. FROM COOLER SHIPPING PLUG.
9. FROM COOLER SHIPPING PLUG "O" RING.
10. COOLER MANIFOLD RETAINING BOLT, M8 x 1.25 x 30 (8 REQ).
11. COOLER MANIFOLD RETAINING BOLT, M8 x 1.25 x 40 (4 REQ).

SAE NUMBER 3 BELL HOUSING WITH MANIFOLD FOR FILTER AND COOLER PORTS

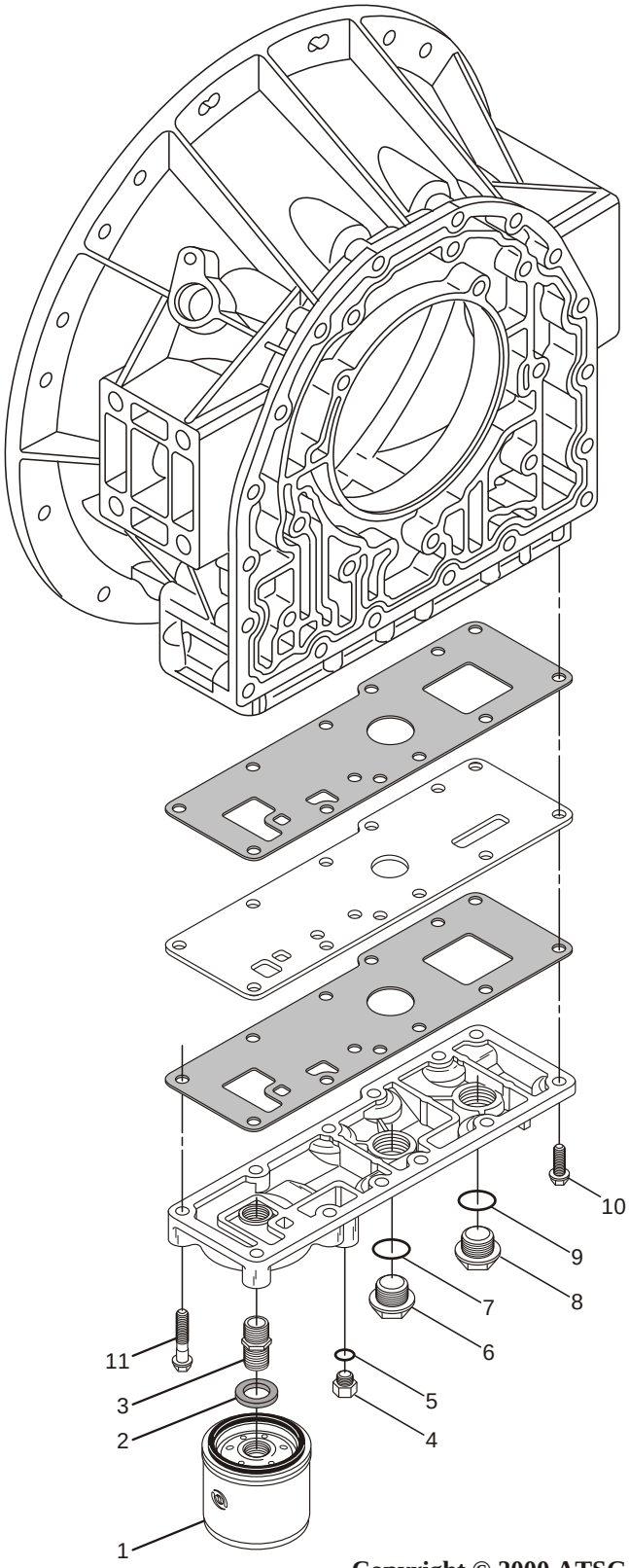

Copyright © 2000 ATSG

Figure 98

SAE NUMBER 2 BELL HOUSING WITH MANIFOLD FOR FILTER AND COOLER PORTS

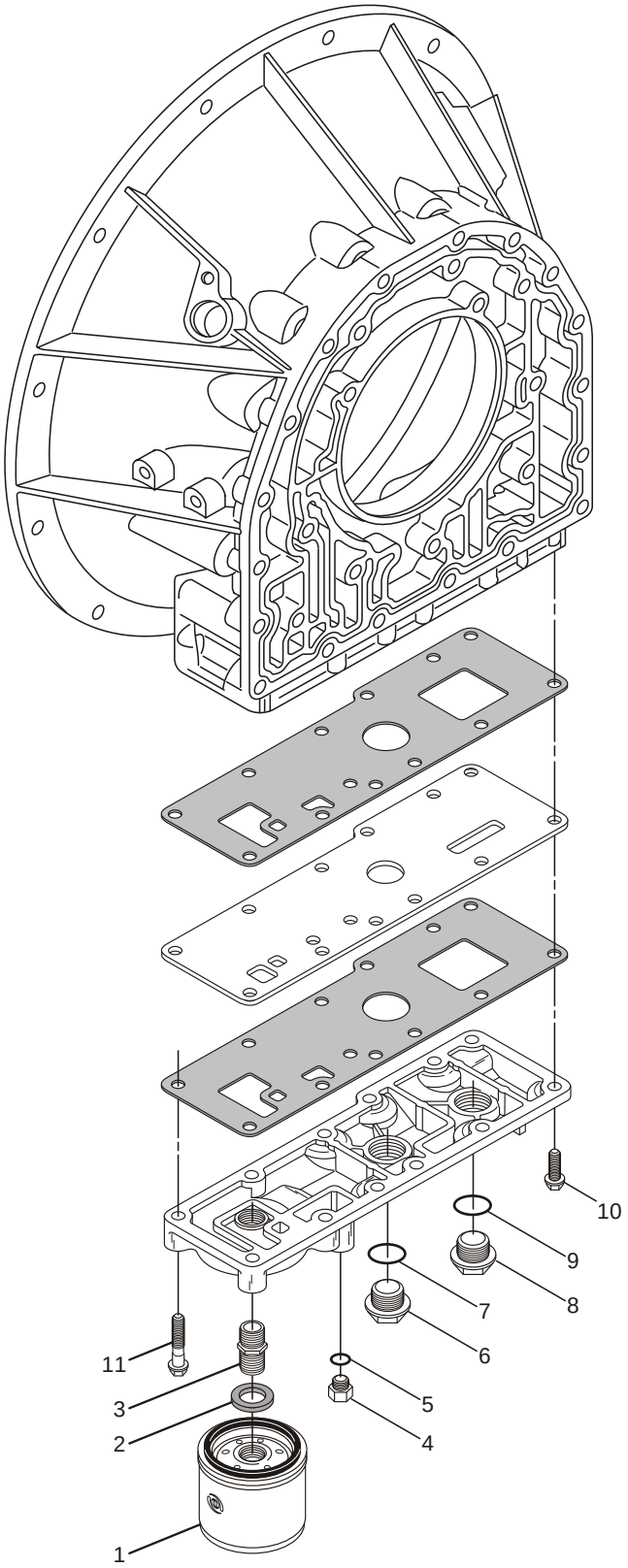

SAE NUMBER 8 BELL HOUSING WITH INTEGRAL FILTER AND COOLER PORTS

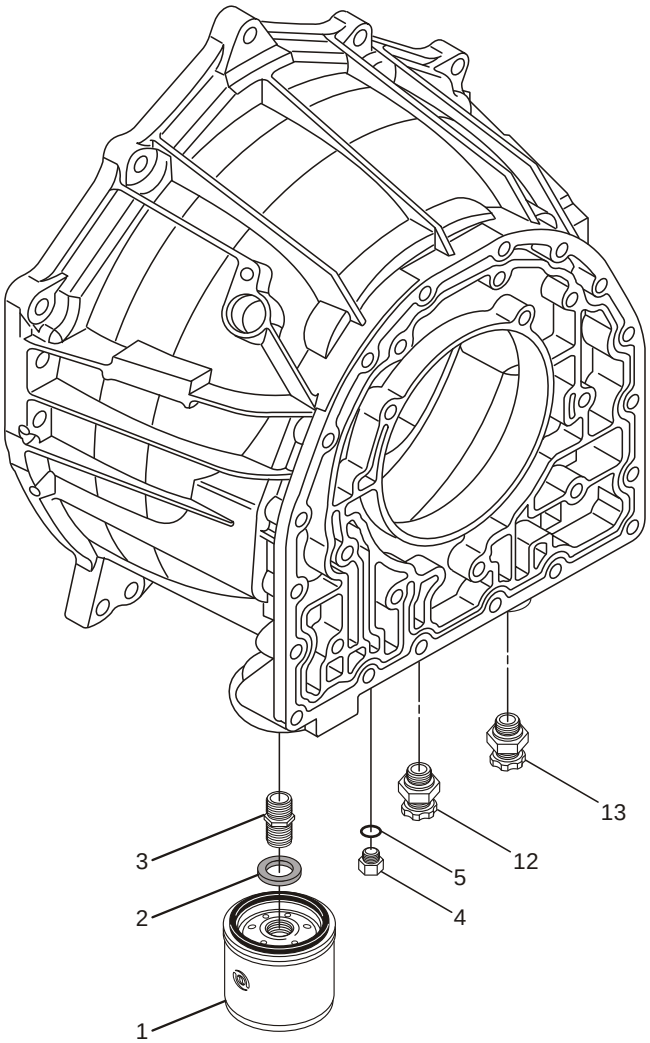

1. MAIN CONTROL FILTER ASSEMBLY.
2. MAIN CONTROL FILTER MAGNET.
3. MAIN CONTROL FILTER ADAPTER TUBE.
4. MAIN LINE PRESSURE TAP PLUG.
5. MAIN LINE PRESSURE PLUG "O" RING.
6. TO COOLER SHIPPING PLUG.
7. TO COOLER SHIPPING PLUG "O" RING.
8. FROM COOLER SHIPPING PLUG.
9. FROM COOLER SHIPPING PLUG "O" RING.
10. COOLER MANIFOLD RETAINING BOLT, M8 x 1.25 x 30 (8 REQ).
11. COOLER MANIFOLD RETAINING BOLT, M8 x 1.25 x 40 (4 REQ).
12. TO COOLER CONNECTOR FITTING ASSEMBLY.
13. FROM COOLER CONNECTOR FITTING ASSEMBLY.

Copyright © 2000 ATSG

Figure 99

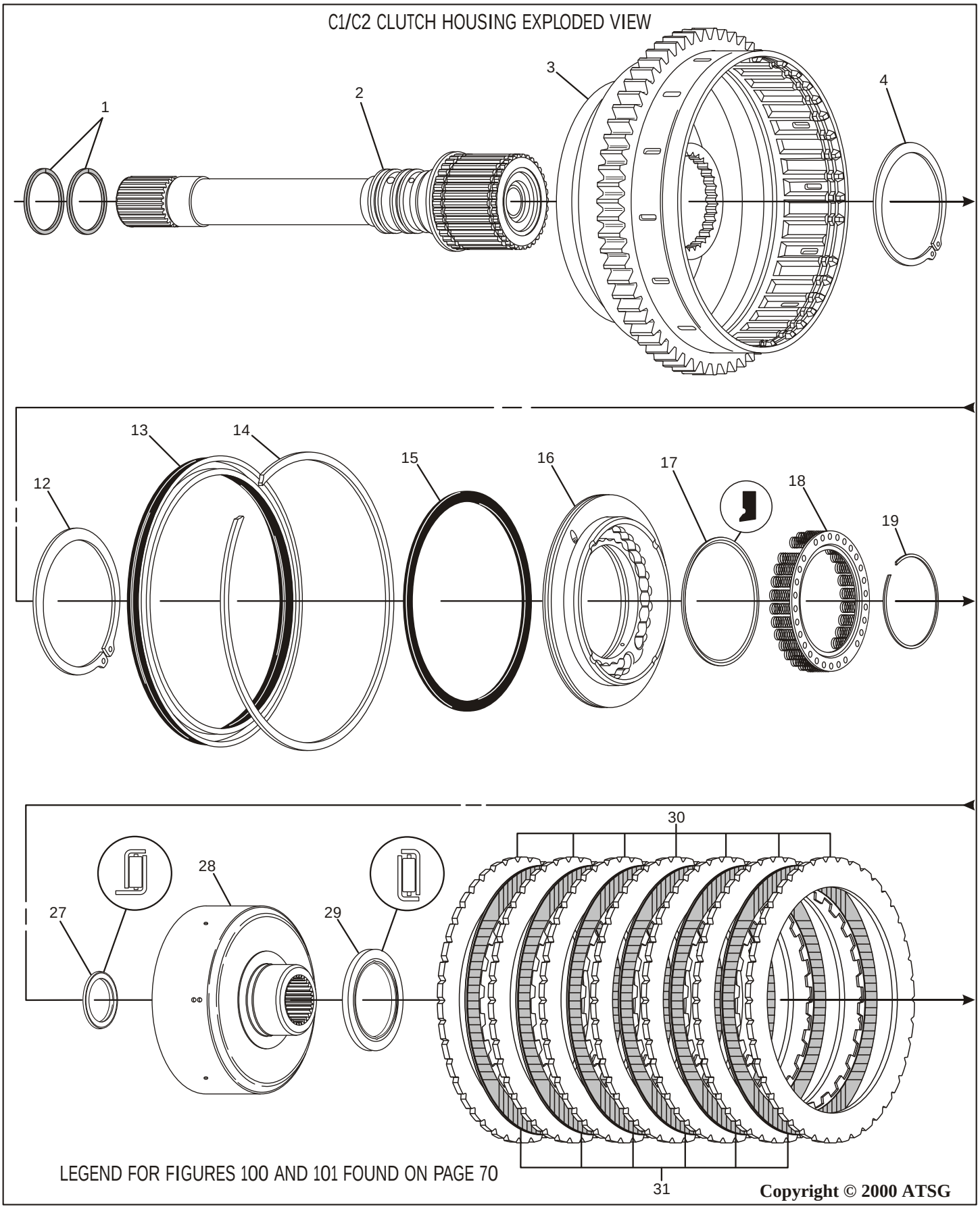
C1/C2 CLUTCH HOUSING EXPLODED VIEW
1
2
3
4
12
13
14
15
16
17
18
19
27
28
29
30
31
LEGEND FOR FIGURES 100 AND 101 FOUND ON PAGE 70
Copyright © 2000 ATSG

Figure 100

https://truckmanualshub.com/

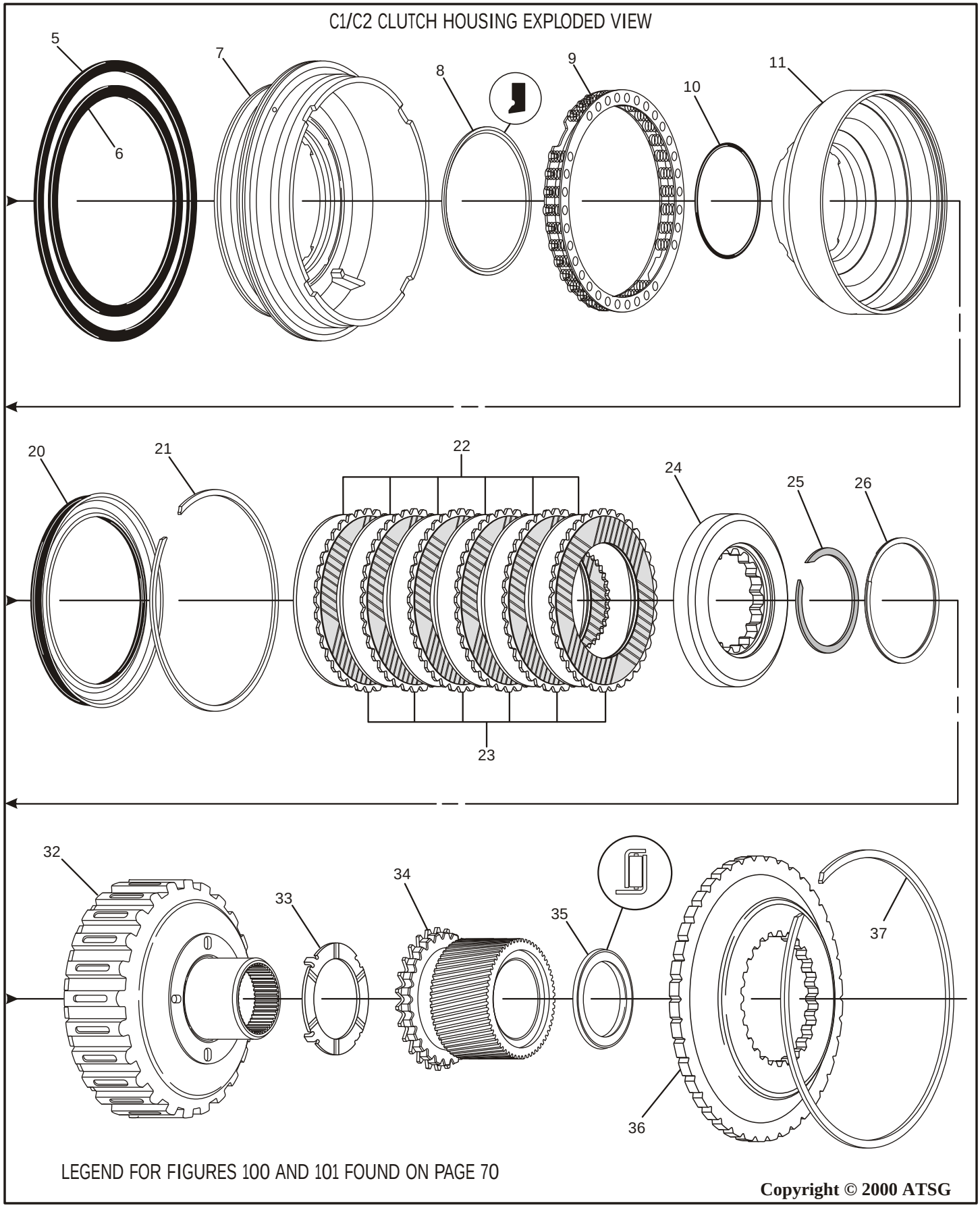

Figure 101

LEGEND FOR FIGURES 100 AND 101

1. TURBINE SHAFT SEAL RINGS (2 REQUIRED).
2. TURBINE SHAFT ASSEMBLY.
3. C1/C2 CLUTCH HOUSING ASSEMBLY.
4. TURBINE SHAFT RETAINING SNAP RING.
5. C2 CLUTCH PISTON BALANCE "D" RING SEAL.
6. C2 CLUTCH PISTON OUTER "D" RING SEAL.
7. C2 CLUTCH PISTON.
8. C2 CLUTCH PISTON INNER LIP SEAL.
9. C2 CLUTCH PISTON RETURN SPRING ASSEMBLY.
10. C1 CLUTCH HOUSING "O" RING SEAL.
11. C1 CLUTCH HOUSING ASSEMBLY.
12. C1 CLUTCH HOUSING RETAINING SNAP RING.
13. C2 CLUTCH BALANCE PISTON ASSEMBLY (MOULDED).
14. C2 CLUTCH BALANCE PISTON RETAINING SNAP RING.
15. C1 CLUTCH PISTON OUTER "D" RING SEAL.
16. C1 CLUTCH PISTON ASSEMBLY.
17. C1 CLUTCH PISTON INNER TEFLON LIP SEAL (iNNER LIP).
18. C1 CLUTCH PISTON RETURN SPRING ASSEMBLY.
19. C1 CLUTCH PISTON RETURN SPRING SNAP RING.
20. C1 CLUTCH BALANCE PISTON ASSEMBLY (MOULDED).
21. C1 CLUTCH BALANCE PISTON RETAINING SNAP RING.
22. C1 CLUTCH STEEL PLATES, INTERNAL SPLINE (6 REQUIRED).
23. C1 CLUTCH LINED PLATES, EXTERNAL SPLINE (6 REQUIRED).
24. C1 CLUTCH BACKING PLATE (SELECTIVE).
25. C1 CLUTCH BACKING PLATE SNAP RING (EXTERNAL).
26. C1 CLUTCH BACKING PLATE SPIRAL SNAP RING (INTERNAL).
27. TURBINE SHAFT/C1 CLUTCH HUB THRUST BEARING.
28. C1 CLUTCH HUB ASSEMBLY.
29. C1 CLUTCH HUB/C2 CLUTCH HUB THRUST BEARING.
30. C2 CLUTCH STEEL PLATES (7 REQUIRED).
31. C2 CLUTCH LINED PLATES (6 REQUIRED).
32. C2 CLUTCH HUB ASSEMBLY.
33. C2 CLUTCH HUB/INPUT SUN GEAR THRUST WASHER.
34. INPUT SUN GEAR ASSEMBLY.
35. INPUT SUN GEAR/P1 PLANETARY CARRIER THRUST BEARING.
36. P1 PLANETARY DRIVE FLANGE.
37. P1 PLANETARY DRIVE FLANGE RETAINING SNAP RING.

Figure 102

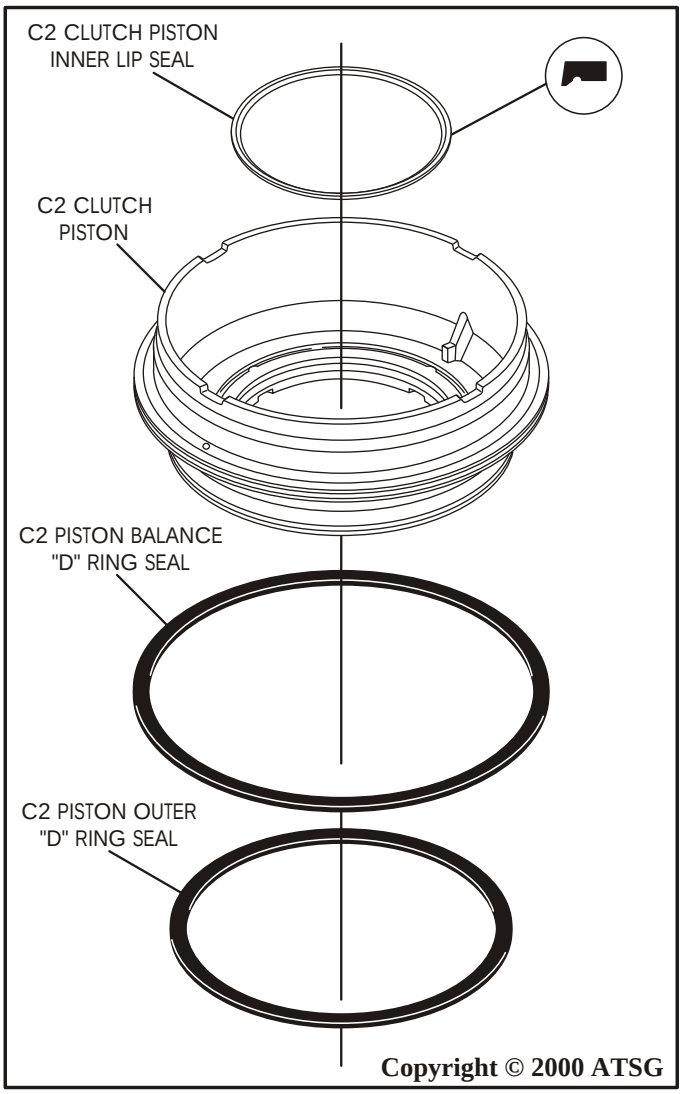

Figure 103

COMPONENT REBUILD (Cont'd)

C1/C2 CLUTCH HOUSING

1. Disassemble the C1/C2 clutch housing using Figures 100 and 101 as a guide.
2. Remove and discard all "O" rings, "D" rings and lip seals (See Figures 100 and 101).
3. Inspect all C1/C2 clutch housing parts for any wear and/or damage.
4. Clean all C1/C2 housing parts thoroughly, and dry with compressed air.
5. If turbine shaft was not removed, it should be removed at this time, as it makes the assembly of the C1/C2 clutch housing much easier.
6. Install the C2 clutch piston inner lip seal with the lip facing direction shown in Figure 103.
7. Install the C2 clutch piston balance "D" ring seal into the piston groove (See Figure 103).
8. Install the C2 clutch piston outer "D" ring seal into the lower piston groove (See Figure 103).
9. Lubricate all three C2 clutch piston seals with a small amount of TransJelä.
10. Install the C2 clutch piston and seals into the C1/C2 clutch housing as shown in Figure 105. ***Note: Care should be used during assembly so as not to damage piston seals.***
11. Install the C2 piston return spring assembly on top of the C2 piston in the housing, as shown in Figure 105.

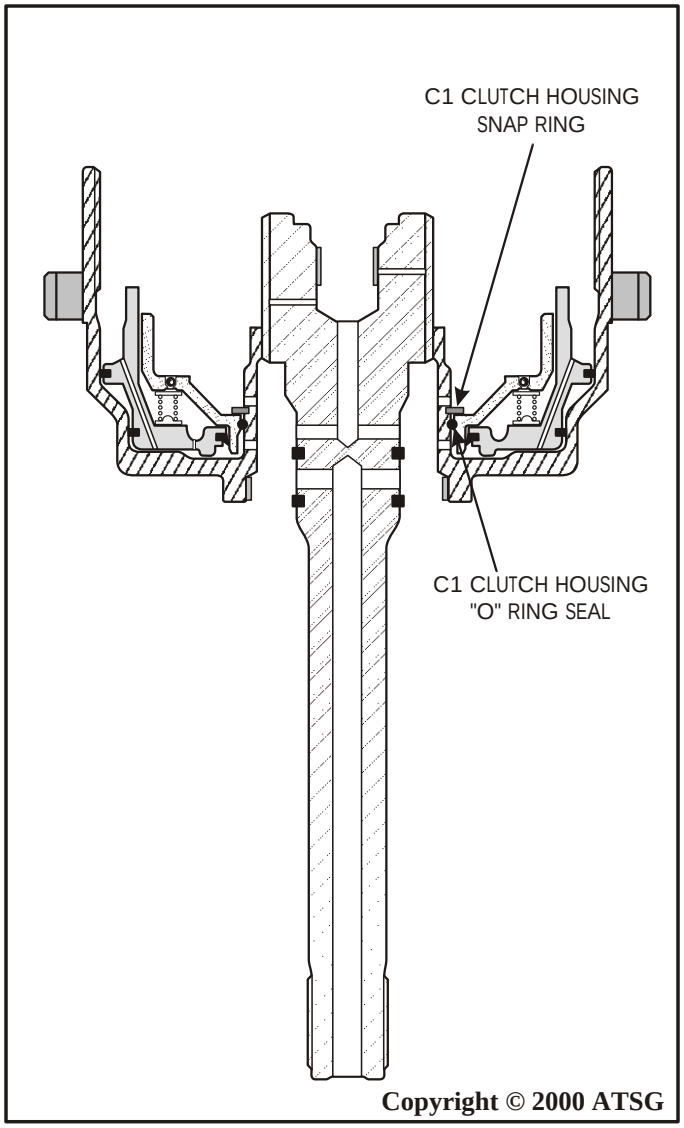

Figure 104

12. Install the C1 clutch housing "O" ring seal into the ***lower*** groove in the C1/C2 clutch housing, as shown in the cut-away in Figure 104.
13. Lubricate the installed "O" ring seal and inside diameter of the C1 clutch housing with a small of TransJelä, and install the C1 clutch housing as shown in Figure 105.
14. Compress the C1 clutch housing against the return spring assembly and install the C1 clutch housing snap ring into the ***upper*** groove in the C1/C2 clutch housing, as shown in cut-away in Figure 104.
    Note: Refer to Figure 106 for snap ring I.D. for all snap rings in the C1/C2 housing.

Continued on Page 73

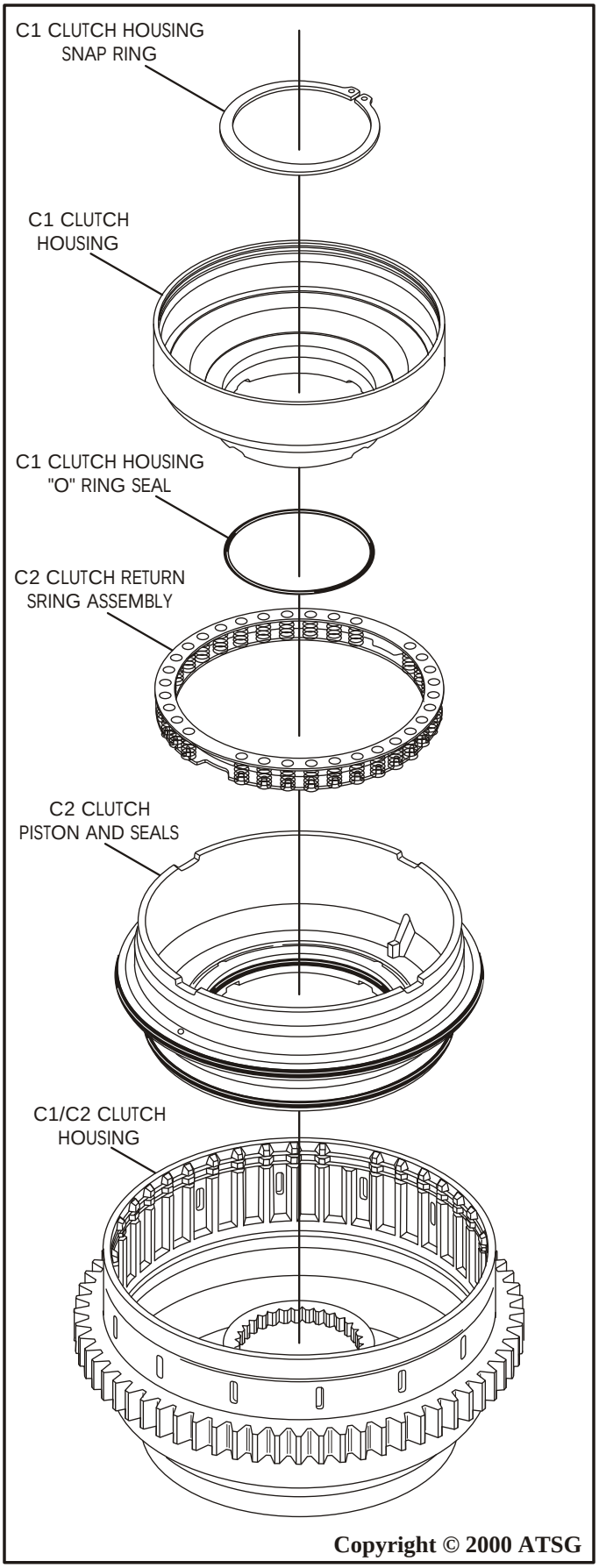

Figure 105

SNAP RING IDENTIFICATION CHART FOR C1/C2 CLUTCH HOUSING

Snap Ring Number 1 = .090" Thick, Largest Diameter "Eyelet" Snap Ring.
(C1 Clutch Housing Retaining Snap Ring)
Snap Ring Number 2 = .079" Thick, Approximate 3-3/16" Diameter.
(C1 Clutch Piston Return Spring Retaining Snap Ring)
Snap Ring Number 3 = .079" Thick, Approximate 6-1/2" Diameter.
(C1 Clutch Balance Piston Retaining Snap Ring)
Snap Ring Number 4 = .092" Thick, Approximate 8-3/8" Diameter, Same as Snap Ring Number 8.
(C2 Clutch Balance Piston Retaining Snap Ring)
Snap Ring Number 5 = .090" Thick, Smallest Diameter "Eyelet" Snap Ring.
(Turbine Shaft Retaining Snap Ring)
Snap Ring Number 6 = .078" Thick, Approximate 2-7/8" Diameter.
(C1 Clutch Backing Plate Retaining Snap Ring)
Snap Ring Number 7 = "Spiral" Snap Ring, Approximate 3-1/4" Diameter.
(C1 Clutch Backing Plate Snap Ring, "Spiral" Retaining Snap Ring)
Snap Ring Number 8 = .092" Thick, Approximate 8-3/8" Diameter, Same as Snap Ring Number 4.
(C2 Clutch Backing Plate Retaining Snap Ring)

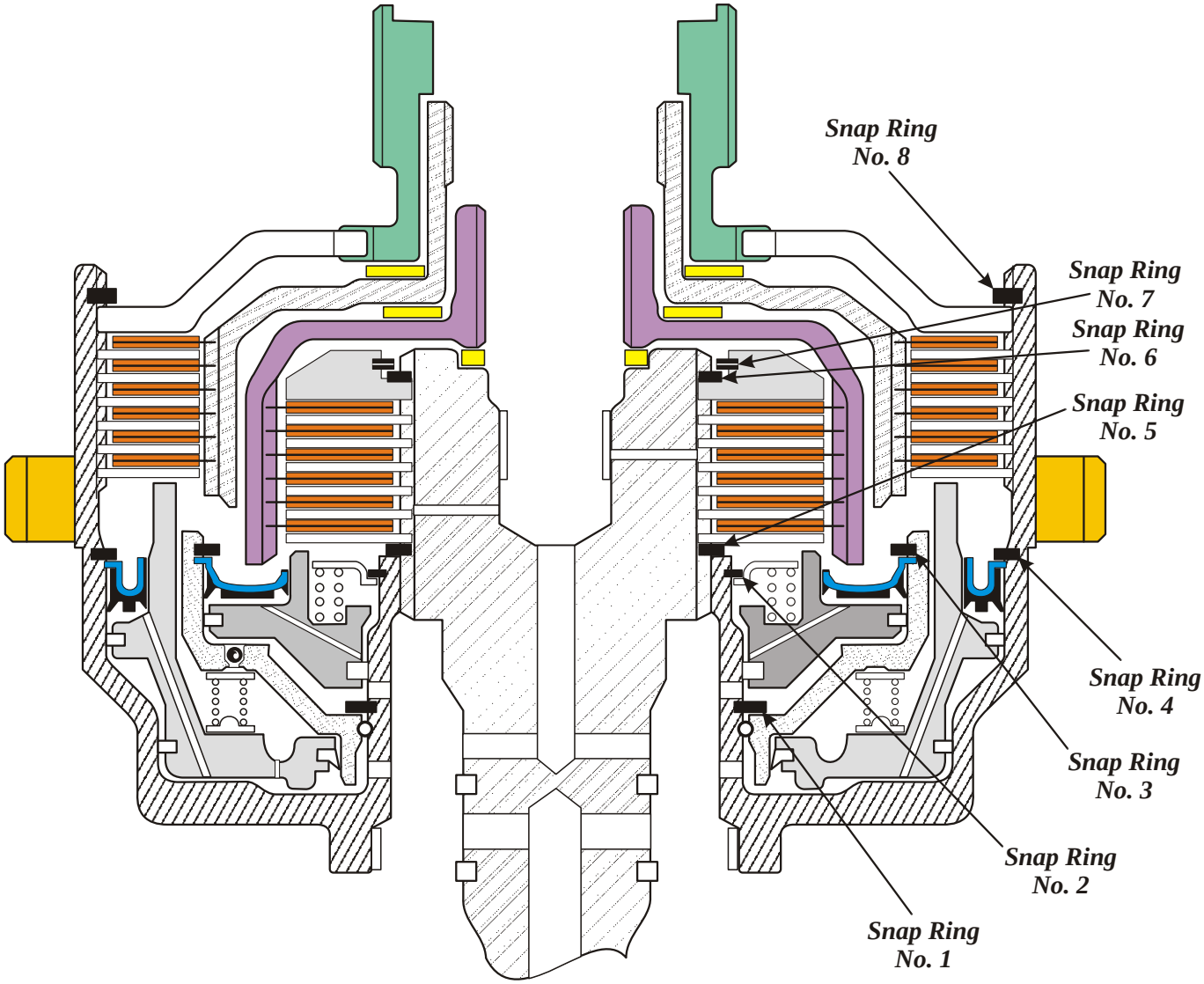

Copyright © 2000 ATSG

Figure 106

CONTINUED FROM PAGE 71

15. Install new C1 clutch piston inner lip seal, as shown in Figure 107.
    Note: This seal is hard plastic and difficult to remove. If the inner lip seal is good, leave it alone and re-use it, or replace as necessary.
16. Install new C1 clutch piston outer "D" ring seal in piston groove, as shown in Figure 107.
17. Lubricate both the seals with a small amount of TransJel®, and install piston into the C1 clutch housing, as shown in Figure 108.
18. Install C1 clutch piston return spring assembly onto the C1 clutch piston (See Figure 108).
19. Compress the return spring and install the snap ring into the groove ensuring that it is properly seated (See Figure 108).
    Note: This snap ring is also difficult to install. Use the proper tools and refer to Figure 106 for snap ring identification.

Continued on Page 74

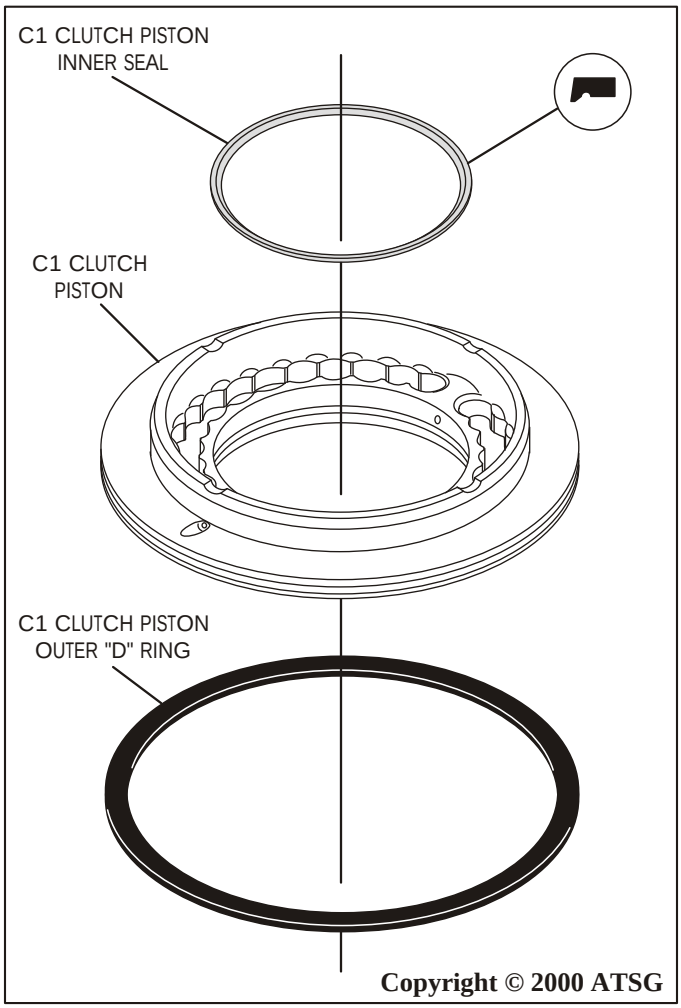

Figure 107

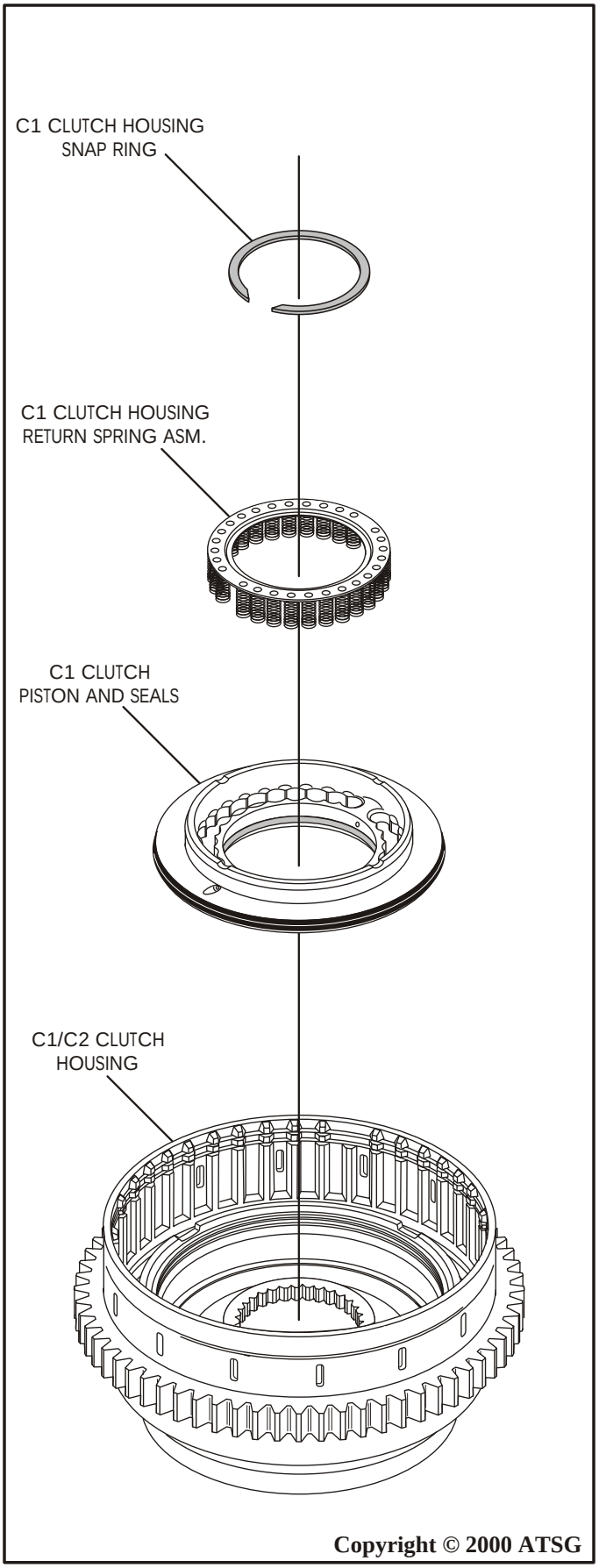

Figure 108

https://truckmanualshub.com/

CONTINUED FROM PAGE 73

20. Lubricate the molded C1 clutch balance piston with small amount of TransJel®, and install in C1/C2 clutch housing (See Figure 109).
    Note: Replace balance piston as necessary.
21. Install the C1 clutch balance piston snap ring as shown in Figure 109, and ensure that it is fully seated (See Figure 109).
22. Lubricate the molded C2 clutch balance piston with small amount of TransJel®, and install in C1/C2 clutch housing (See Figure 109).
    Note: Replace balance piston as necessary.
23. Install the C2 clutch balance piston snap ring as shown in Figure 109, and ensure that it is fully seated (See Figure 109).

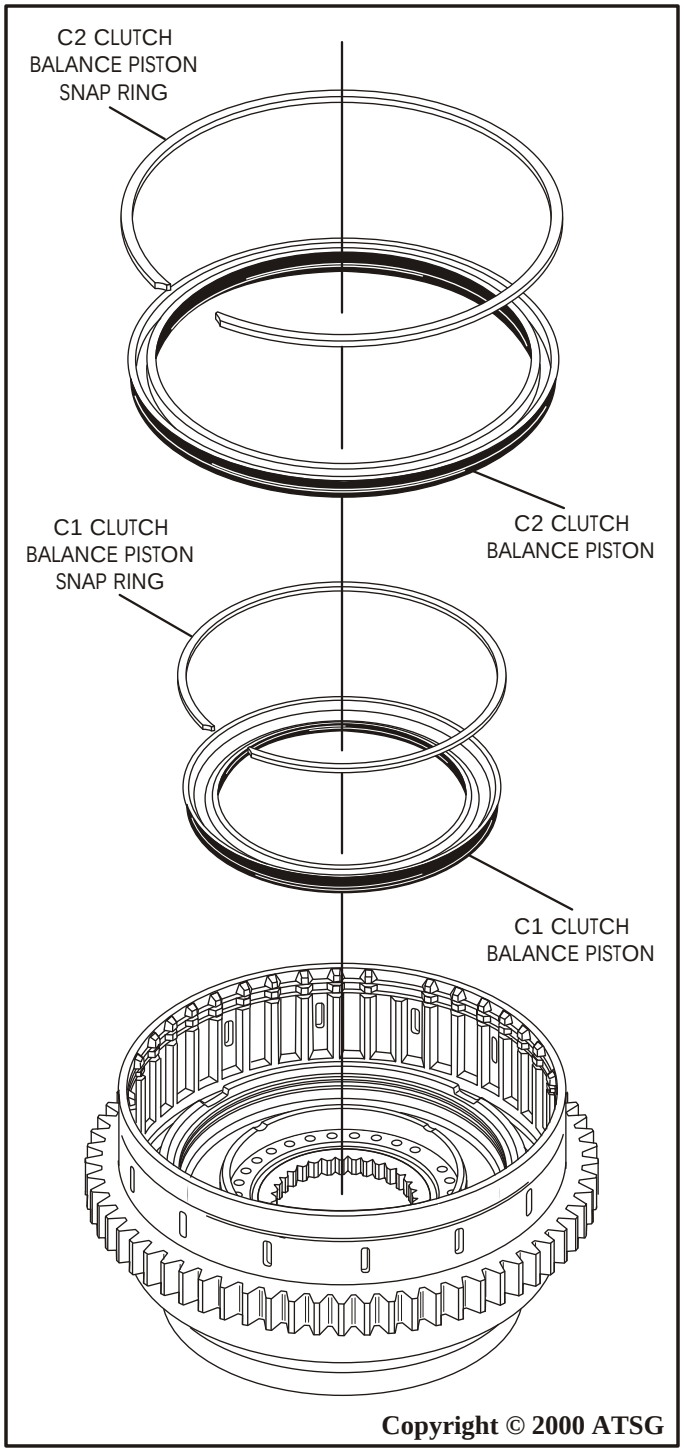

Figure 109

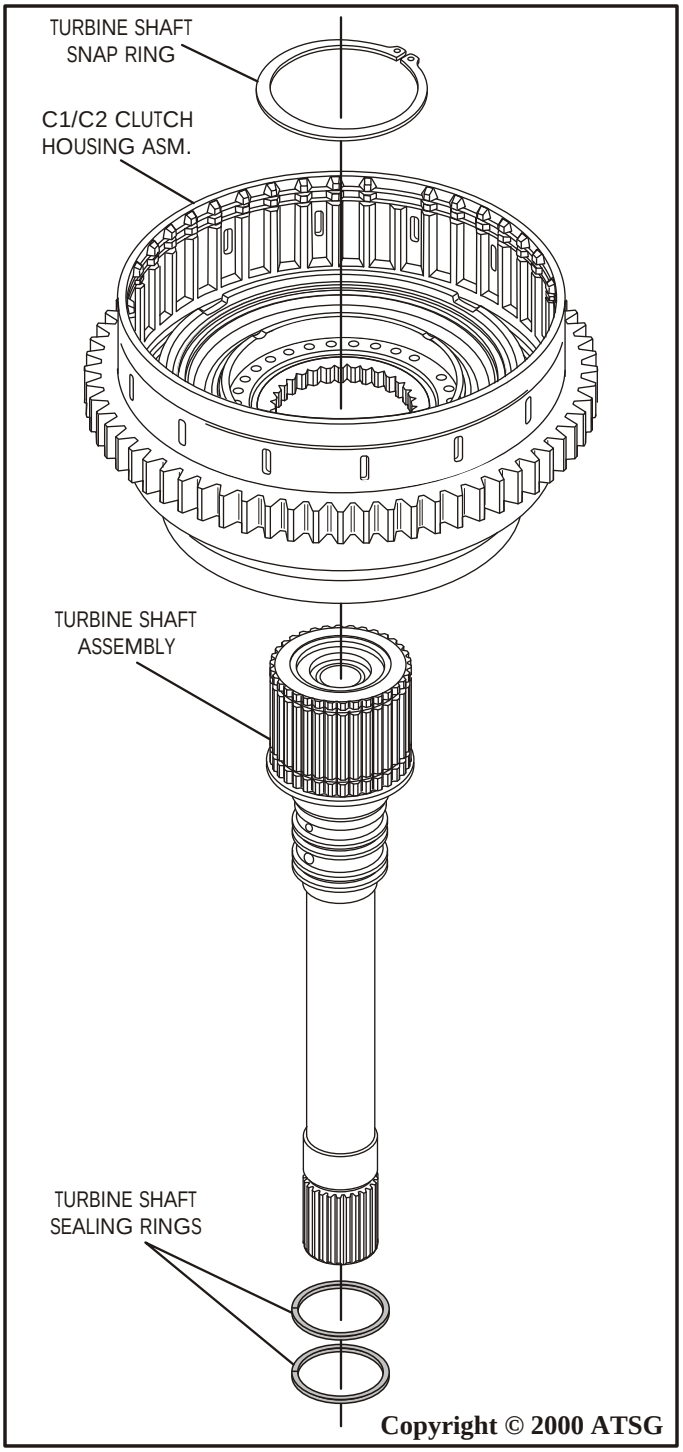

Figure 110

24. Install two new sealing rings onto turbine shaft as shown in Figure 110.
25. ***Now*** install the turbine shaft into the splines of the C1/C2 clutch housing and install the eyelet snap ring in bottom groove (See Figure 110).
    Note: This is the smaller of the 2 eyelet snap rings in this housing. Refer to Figure 106 for positive snap ring identification.
26. Install C1 clutch pack beginning with a steel plate, and alternating with a lined plate until you have installed 6 required steel plates and 6 required lined plates (See Figure 111).
    Note: Notice that the steel plates have internal teeth and the lined plates have external teeth.
27. Install the C1 clutch backing plate in housing in the direction shown in Figure 111, and make sure that it is fully seated.
28. Install the external C1 clutch backing plate snap ring as shown in Figure 111.
    Note: The Spiral snap ring must be removed from the backing plate to install the external snap ring. Refer to Figure 106 for positive snap ring identification.
29. After the external backing plate snap ring has been installed, now install the "Spiral" snap ring on the inside groove of backing plate, as shown in Figure 111.
    Note: The Spiral snap ring must be installed in backing plate to retain the external snap from possibly coming off from centrifugal force. Refer to Figure 106 for positive I.D. of snap rings in C1/C2 housing.

Continued on Page 76

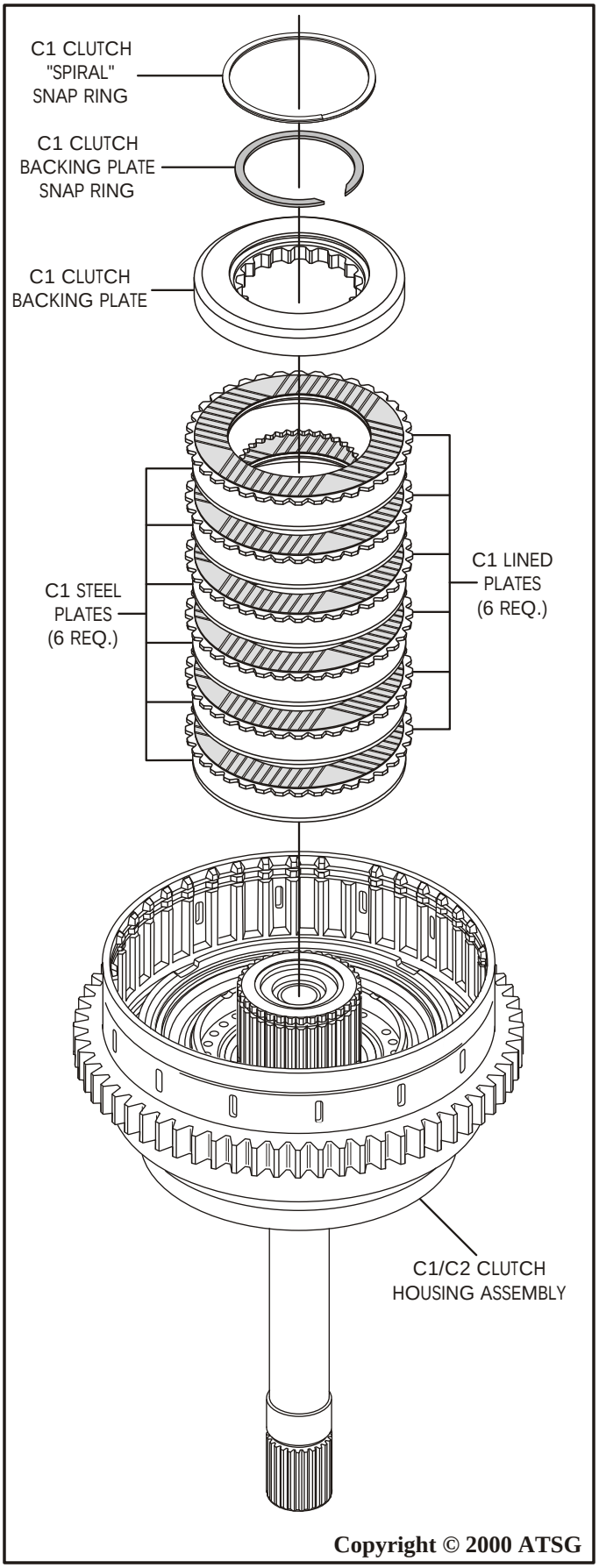

Figure 111

CONTINUED FROM PAGE 75

30. Install dial indicator onto C1/C2 clutch housing as shown in Figure 112, with indicator indexed against the C1 ***selective*** backing plate, and set the dial to zero.
31. Lift up on both sides of C1 clutch pack until the selective backing plate is against the snap ring, and record dial indicator reading.
    Note: C1 clutch clearance is .105" - .125".
32. Change the C1 backing plate as necessary to obtain correct clutch clearance.
33. Install the turbine shaft/C1 clutch hub thrust bearing assembly onto the turbine shaft in the direction shown in Figure 112.
34. Install the C1 clutch hub over the external teeth of the lined plates, in a twisting back and forth motion until fully seated (See Figure 112).
35. Install the C1 clutch hub/C2 clutch hub thrust bearing assembly onto the C1 clutch hub in the direction shown in Figure 112.
36. Install the C2 clutch hub over C1 clutch hub, as shown in Figure 113.
37. Install C2 clutch hub to input sun gear thrust washer, ensuring that tabs are engaged into the slots on C2 clutch hub, as shown in Figure 113

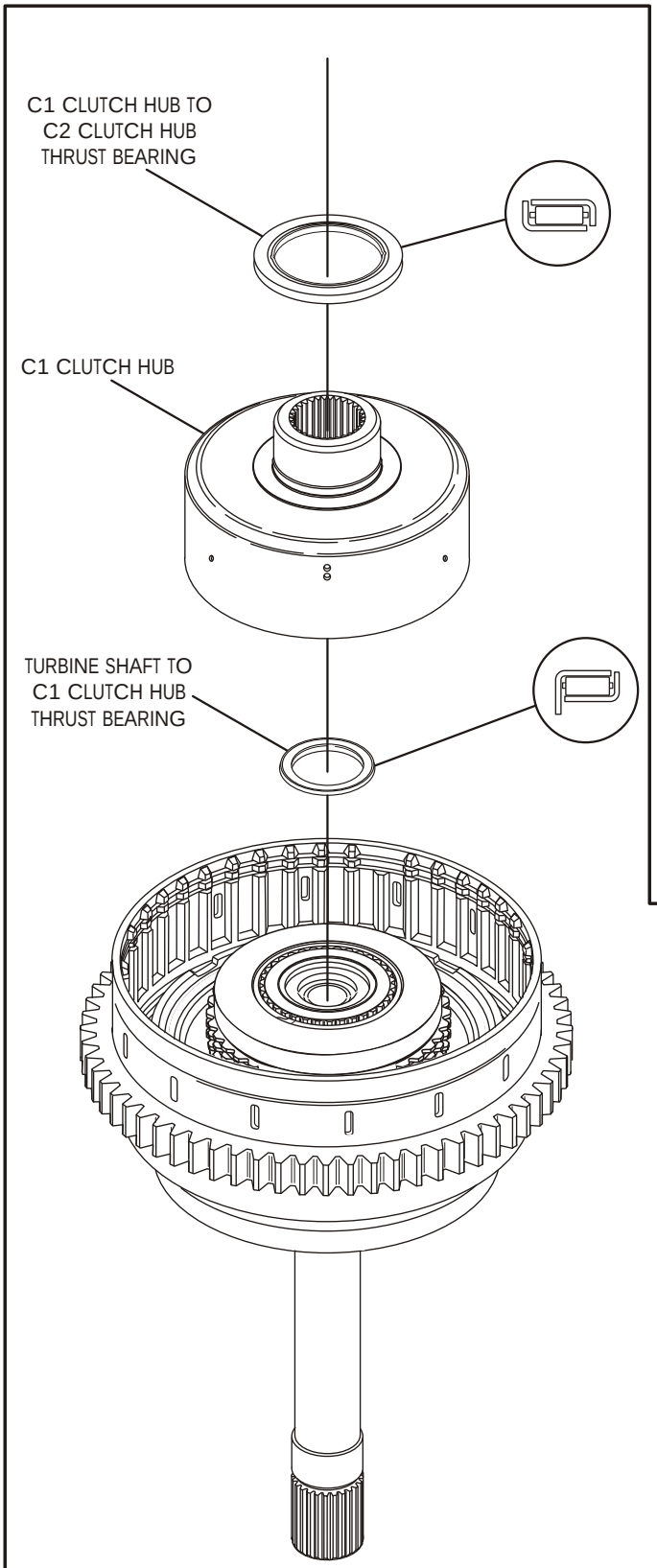

CHECKING C1 CLUTCH CLEARANCE

Clearance Should Be .105" - .125"

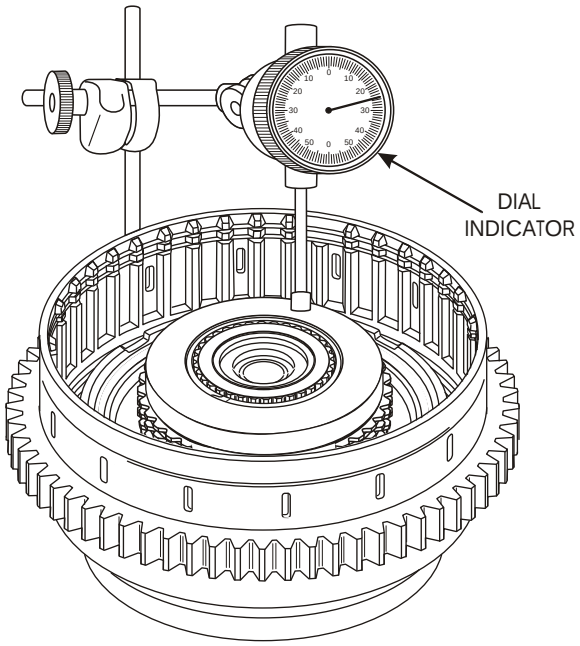

Copyright © 2000 ATSG

Figure 112

38. Install the C2 clutch pack into the housing, as shown in Figure 114, beginning with a steel plate and alternating with lined plates until you have installed 7 steel plates and 6 lined plates. ***Note: In the C2 clutch pack you begin with a steel plate and end with a steel plate as shown in Figure 114.***

Continued on Page 78

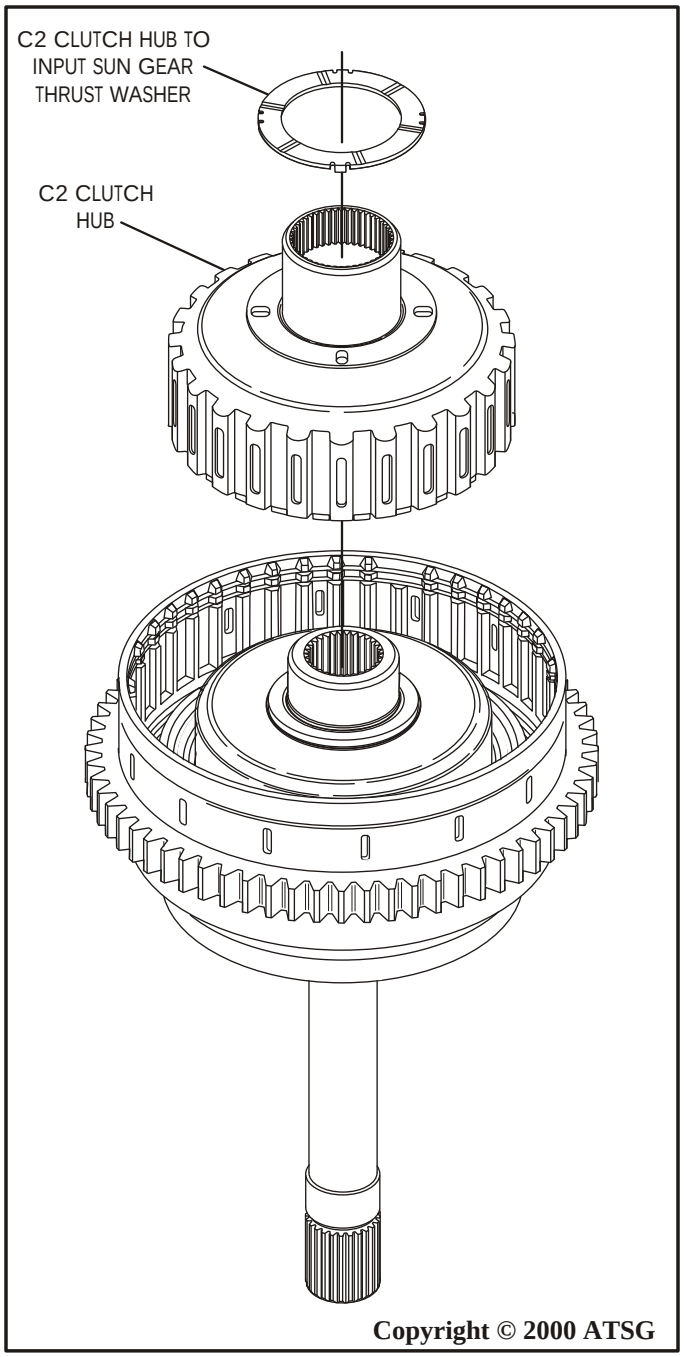

Figure 113

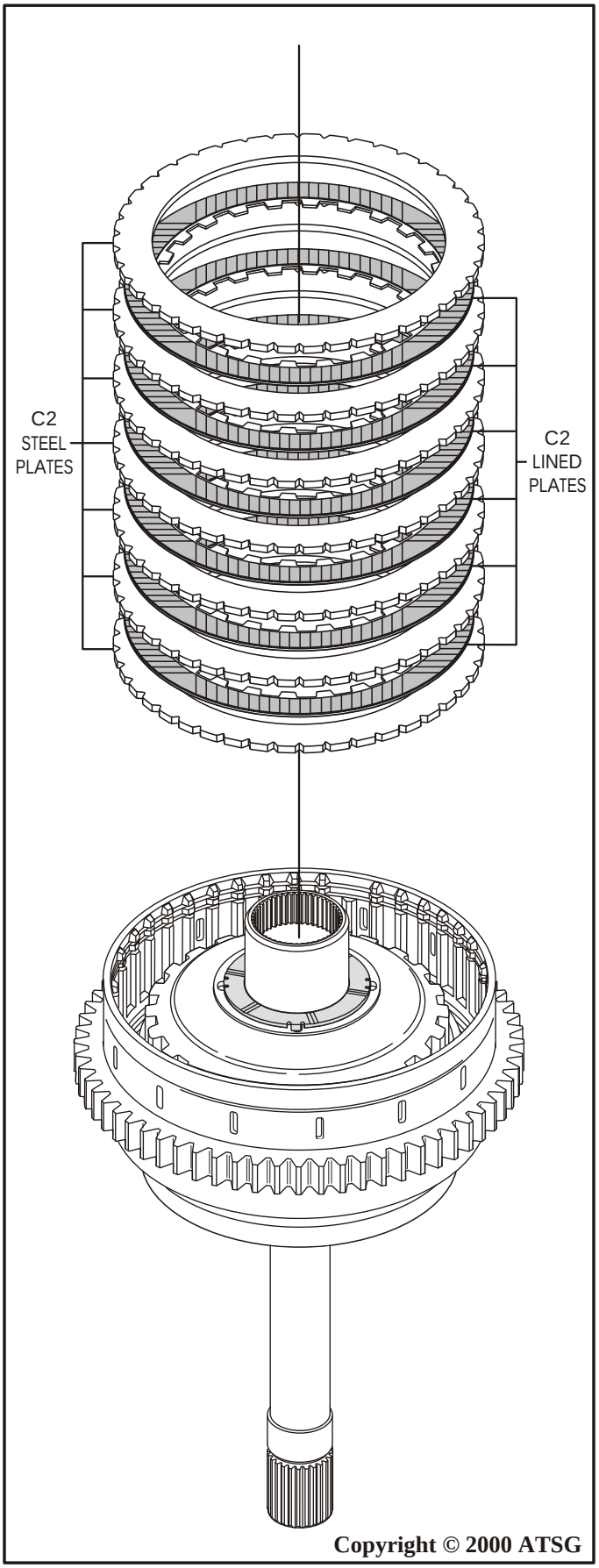

Figure 114

CONTINUED FROM PAGE 76

36. Install the P1 planetary drive flange snap ring into the ***lower*** groove in the clutch housing, as shown in Figure 117.
37. Check the C2 clutch clearance using a feeler gage, as shown in Figure 117.
    Note: Correct C2 clutch clearance should be .060" - .085" (See Figure 117). There are no selectives for C2 clutch. If the clearance is not correct, there is a mis-assembly.
38. Remove the P1 planetary drive flange snap ring from the lower groove in the clutch housing.
39. Install P1 planetary (Input) sun gear through the P1 planetary drive flange from the bottom as shown in Figures 115 and 116.
40. Holding the assembly by the sun gear, install the sun gear and drive flange assembly into the C1/C2 housing engaging the drive flange teeth into the splines of housing (See Figure 115).
    Note: Notice that drive flange has three wide teeth that must be indexed to 3 wide grooves in the housing (See Figure 115).
41. Install the P1 planetary drive flange snap ring into ***top*** groove in housing (See Figure 115).
    Note: Refer to Figure 106 for C1/C2 clutch housing snap ring identification as necessary.

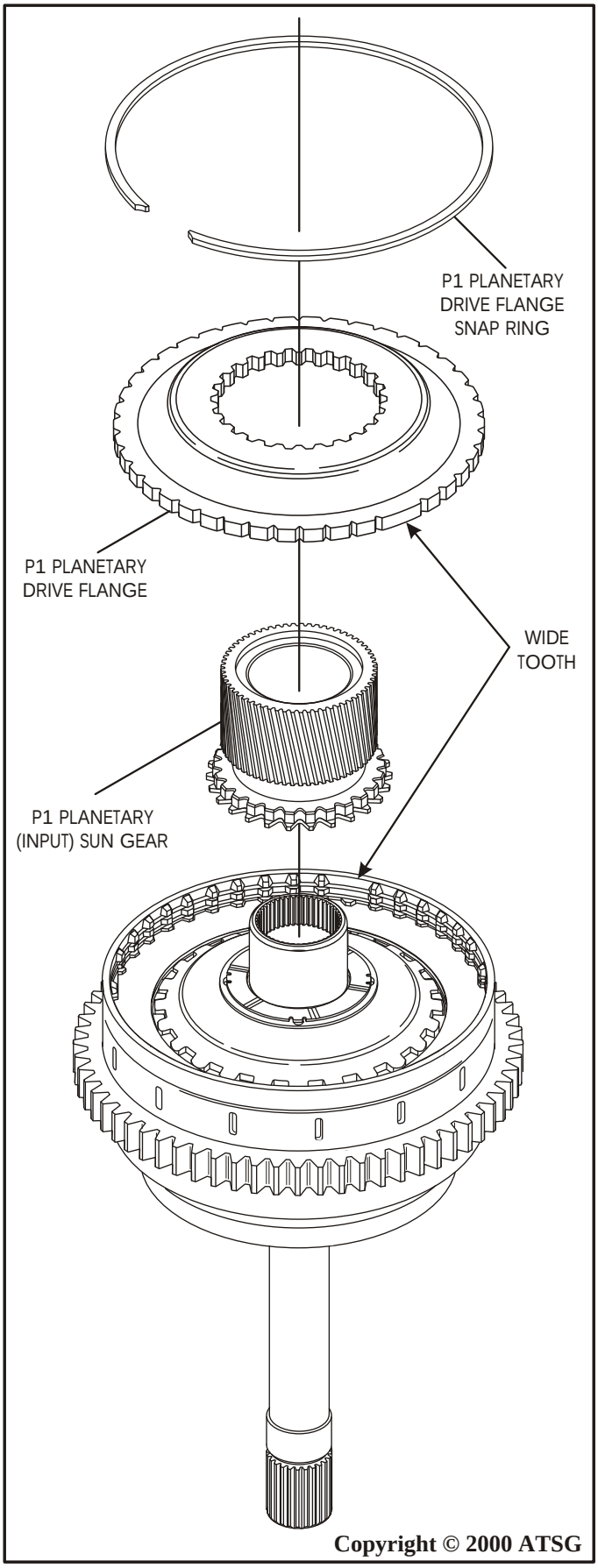

Figure 115

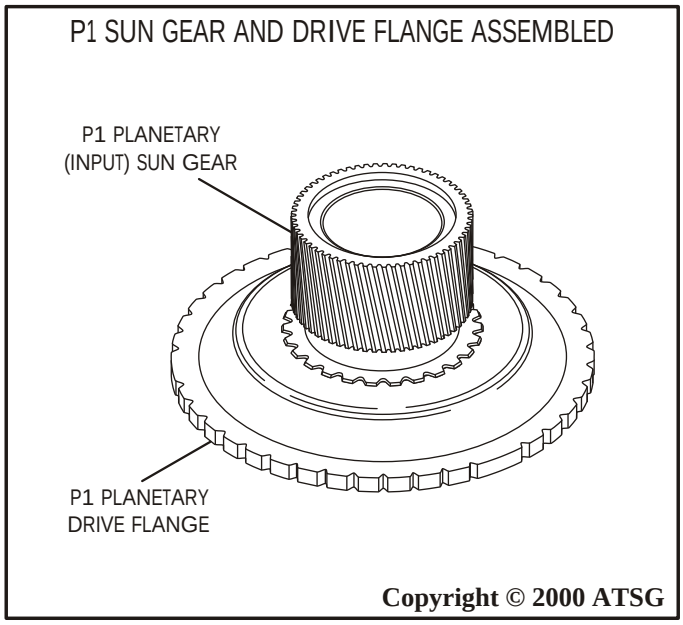

Figure 116

42. Install the P1 sun gear to P1 planetary carrier thrust bearing onto the sun gear in the direction shown in Figure 118, and retain with a small amount of TransJel®.
43. Set completed C1/C2 Clutch Housing assembly aside for the final assembly process. Refer to Figure 118.

"COMPONENT REBUILD"
Continued on Page 82

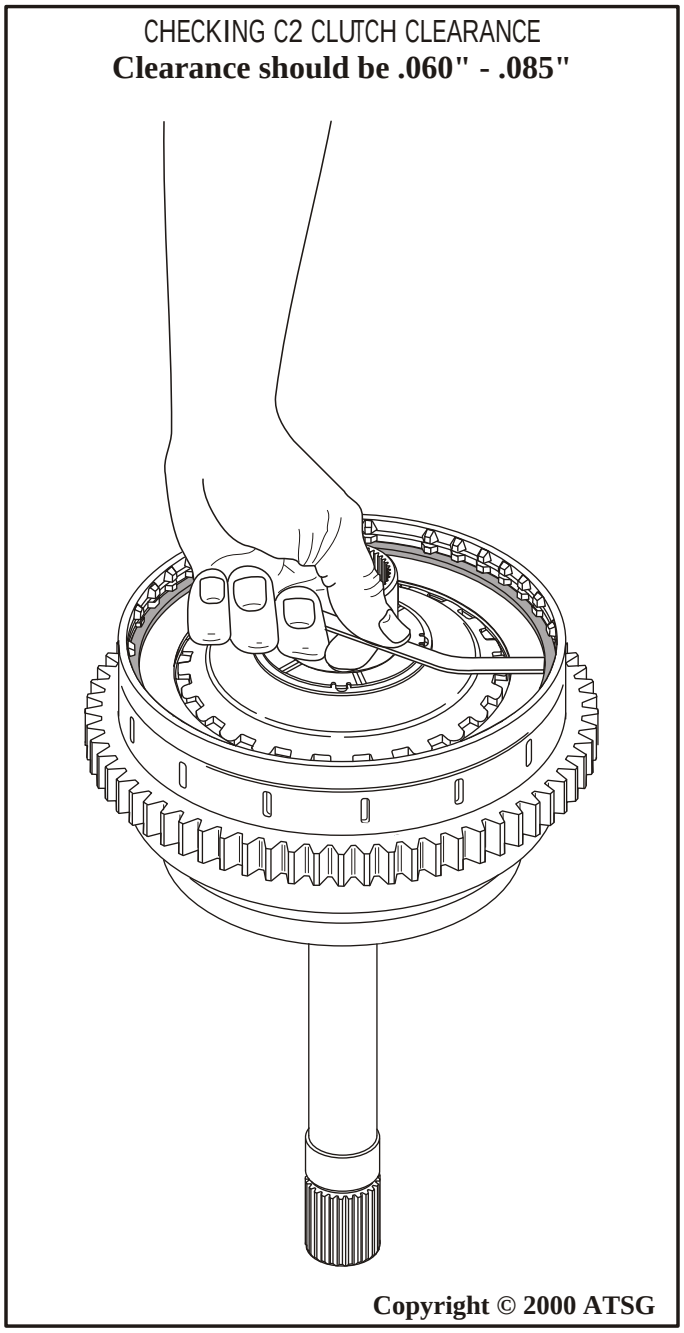

Figure 117

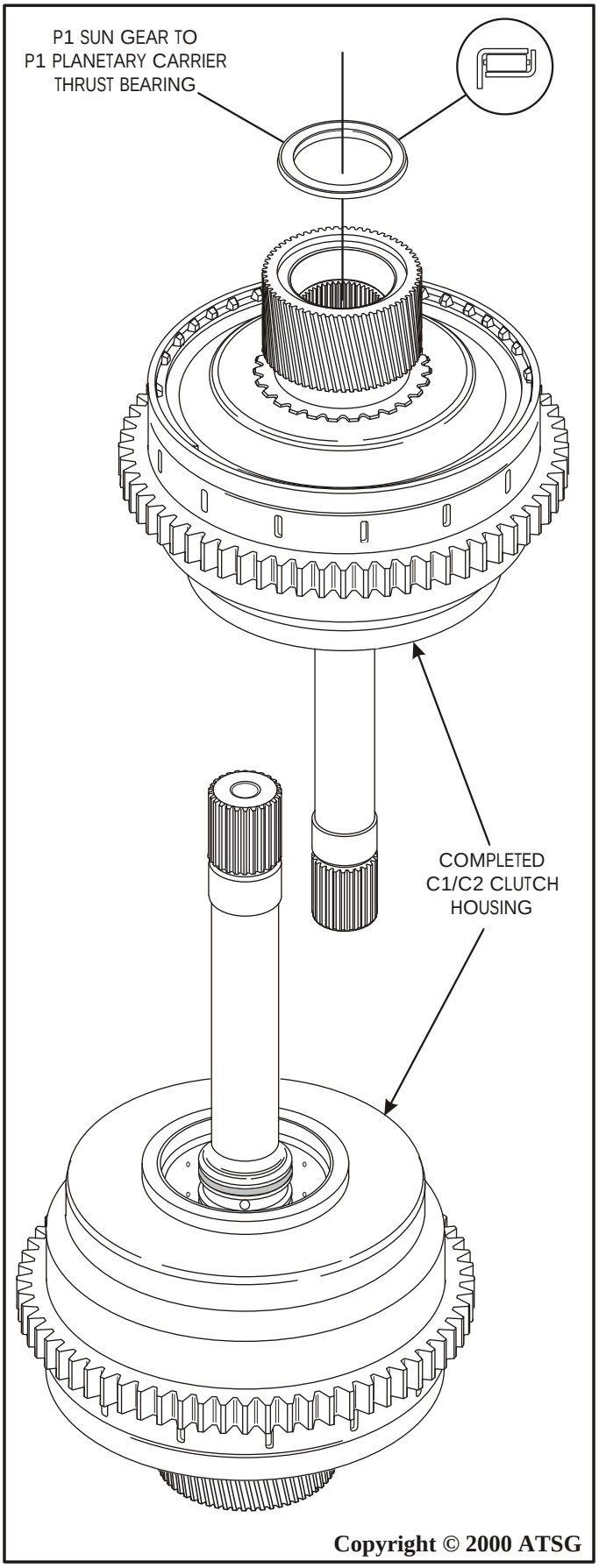

Figure 118

ALLISON SERIES 1000/2000 COMPLETE VALVE BODY

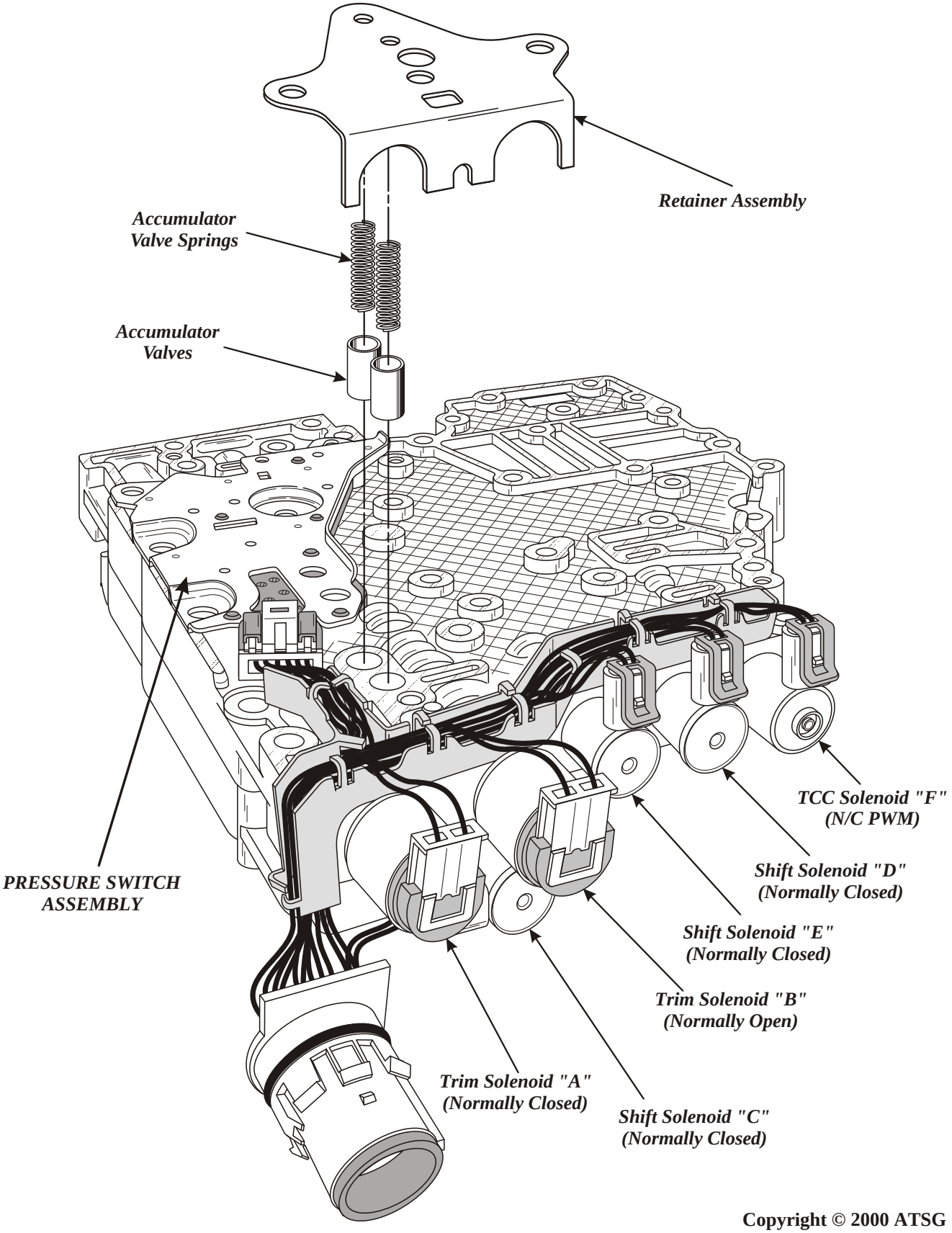

Copyright © 2000 ATSG

Figure 119

https://truckmanualshub.com/

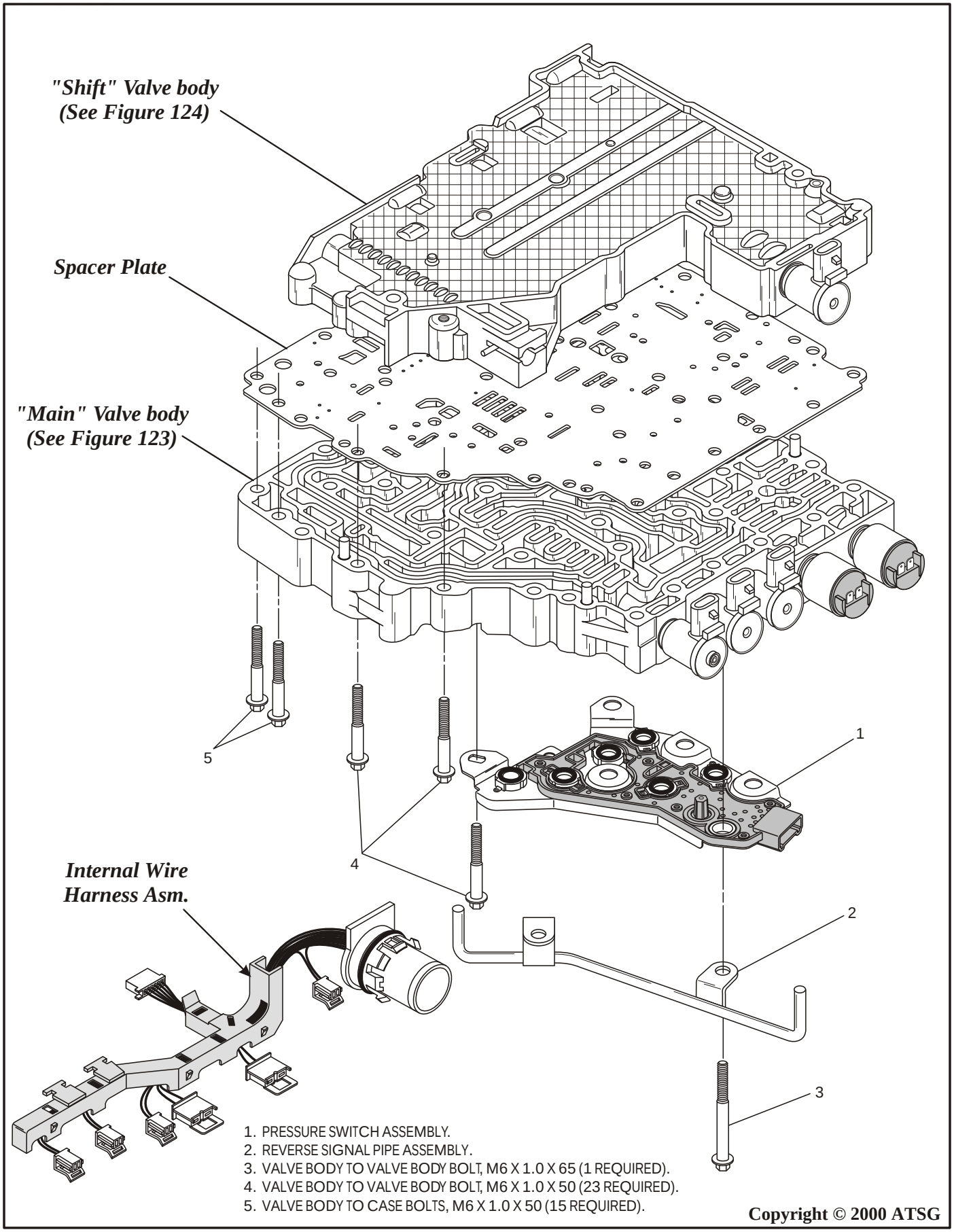

Copyright © 2000 ATSG

Figure 120

COMPONENT REBUILD (Cont'd)

VALVE BODY ASSEMBLY

1. Disassemble the valve body assembly, using Figures 119 and 120 as a guide.
2. Remove the two bolts retaining the reverse pipe, and remove the reverse pipe from valve body assembly (See Figure 121).
   Note: Notice the manual valve pin, as shown in Figure 121. This pin can fall out and not be noticed. Remove it now and place in safe place until reassembly.
3. Remove the wire connector from the pressure switch assembly and all six solenoids as shown in Figure 119.
4. Remove the two solenoid retaining clips from valve body, shown in Figure 121 and remove the internal wire harness assembly.
5. Remove the three bolts from the trim solenoid retaining bracket and remove the bracket, as shown in Figure 119.
6. Remove the two trim solenoids using caution so that valve trains behind them do not come out at this time.
   Note: Notice that Trim Solenoid "A" has a green "O" ring, and Trim Solenoid "B" has a black "O" ring. The snout diameters are also different, .645" for "A" and .665" for "B". Refer to Figure 122.
7. Air checks and resistance readings for all of the solenoids are provided in Figure 122, that can be performed now to determine if replacement is necessary.
   Note: Air checks should be made on fixture with 40 PSI regulated air pressure.

Continued on Page 86

VALVE BODY ASSEMBLY

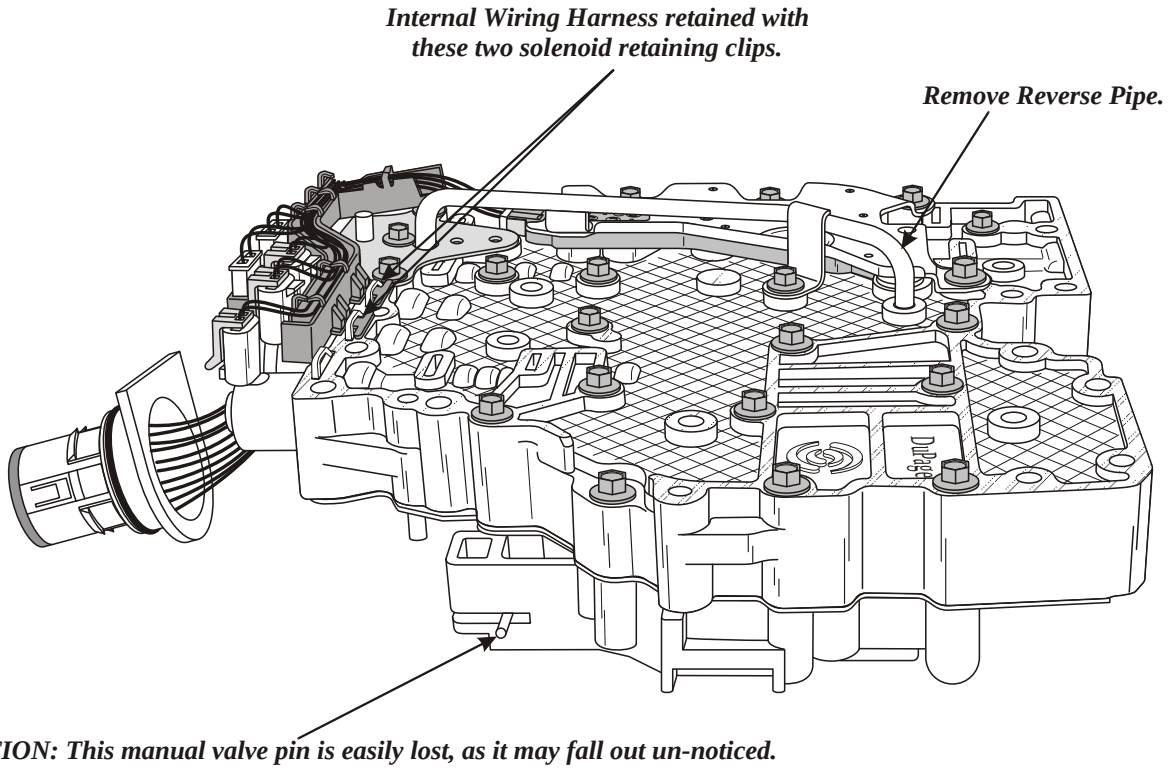

Copyright © 2000 ATSG

Figure 121

SOLENOID AIR CHECKS

TRIM SOLENOID "A" (Normally Closed)

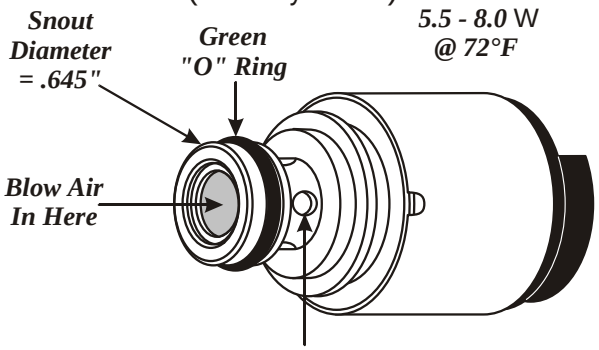

TRIM SOLENOID "B" (Normally Open)

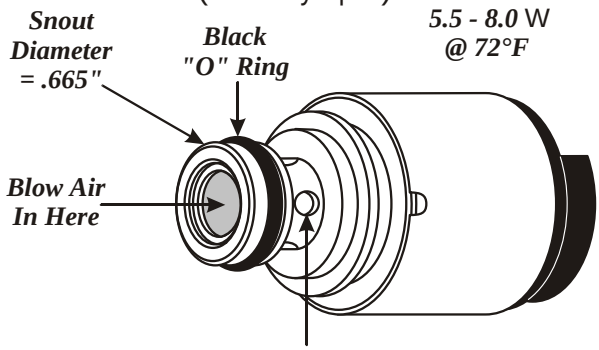

SHIFT SOLENOIDS "C", "D" AND "E"

20 - 30 W
@ 72°F

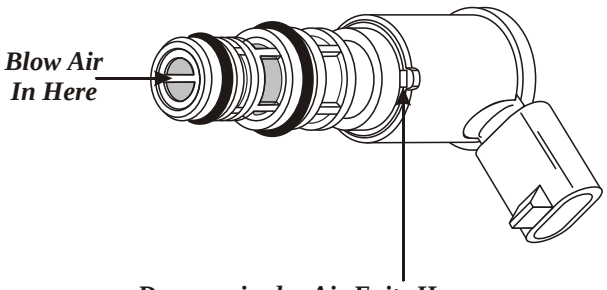

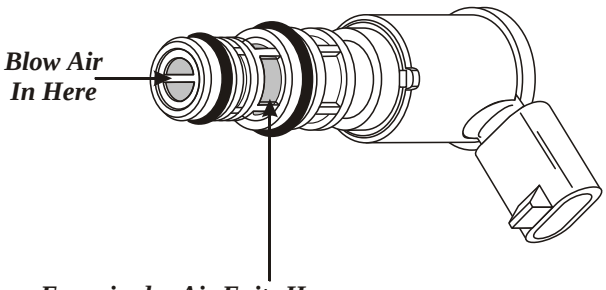

LOCK-UP SOLENOID "F"

8 - 15 W
@ 72°F

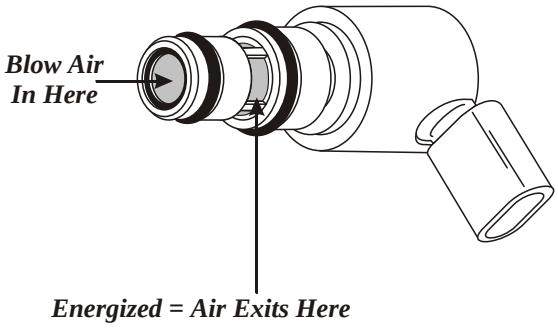

Copyright © 2000 ATSG

Figure 122

"MAIN" VALVE BODY EXPLODED VIEW

1. MAIN VALVE BODY CASTING.
2. ALIGNMENT DOWELS (5 REQUIRED).
3. MAIN CONTROL RELIEF VALVE.
4. MAIN CONTROL RELIEF VALVE SPRING.
5. MAIN CONTROL RELIEF VALVE SPRING RETAINER.
6. EXHAUST BACKFILL VALVE SPRING RETAINER.
7. EXHAUST BACKFILL VALVE SPRING.
8. EXHAUST BACKFILL VALVE.
9. BOLT, M6 X 1.0 X 50 (23 REQUIRED)
10. SOLENOID "F" TRIM VALVE SPRING.
11. SOLENOID "F" TRIM VALVE.
12. SOLENOID "F" TRIM VALVE SLEEVE.
13. SOLENOID "F" SMALL "O" RING.
14. SOLENOID "F" LARGE "O" RING.
15. SOLENOID "F" (LOCK-UP PWM).
16. SOLENOID "F" RETAINING CLIP.
17. SHIFT SOLENOID "D" SMALL "O" RING.
18. SHIFT SOLENOID "D" LARGE "O" RING.
19. SHIFT SOLENOID "D".
20. SHIFT SOLENOID "D" RETAINING CLIP.
21. SHIFT SOLENOID "E" SMALL "O" RING.
22. SHIFT SOLENOID "E" LARGE "O" RING.
23. SHIFT SOLENOID "E".
24. TRIM PRESSURE ACCUMULATORS.
25. TRIM PRESSURE ACCUMULATOR SPRINGS.
26. TRIM SOLENOID "A" AND "B" RETAINING BRACKET.
27. TRIM "B" VALVE SPRING.
28. TRIM "B" VALVE.
29. TRIM GAIN VALVE.
30. TRIM SOLENOID "B" "O" RING (BLACK).
31. TRIM SOLENOID "B" (N/O PWM) (Snout Diameter = .665").
32. TRIM SOLENOID "A" (N/C PWM) (Snout Diameter = .645").
33. TRIM SOLENOID "A" "O" RING (GREEN).
34. TRIM GAIN VALVE.
35. TRIM "A" VALVE (Note I.D. Ring Between Lands).
36. TRIM "A" VALVE SPRING.

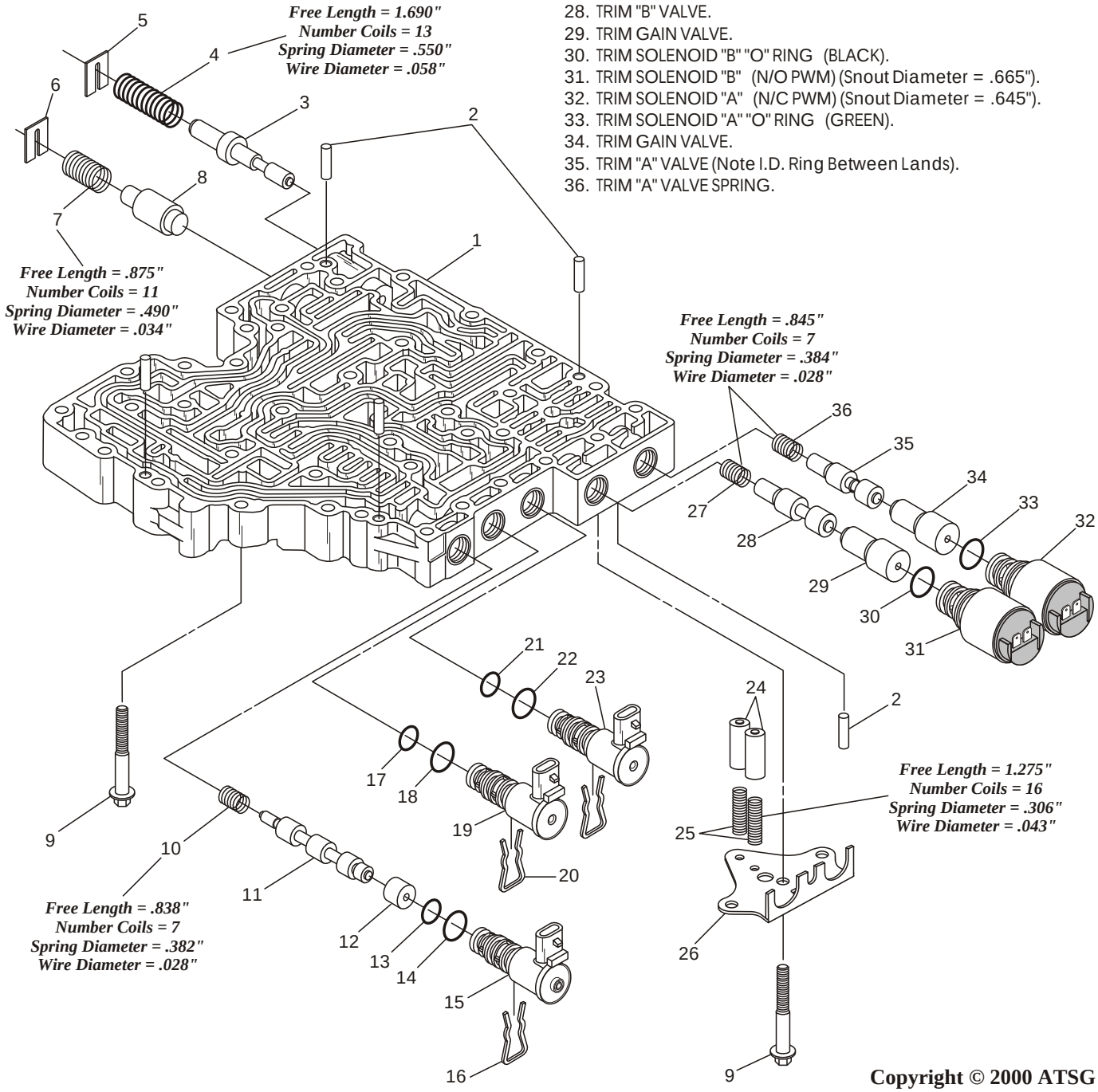

Copyright © 2000 ATSG

Figure 123

"SHIFT" VALVE BODY EXPLODED VIEW

1. SHIFT VALVE BODY CASTING.
2. SOLENOID SCREEN.
3. SHIFT SOLENOID "C".
4. SHIFT SOLENOID "C" RETAINING CLIP.
5. MANUAL SELECTOR VALVE.
6. MANUAL SELECTOR VALVE PIN.
7. SOLENOID "D" SHIFT VALVE.
8. SOLENOID "D" SHIFT VALVE SPRING.
9. SOLENOID "D" SHIFT VALVE BORE PLUG.
10. SOLENOID "D" SHIFT VALVE LINE-UP RETAINER.
11. SOLENOID "E" SHIFT VALVE.
12. SOLENOID "E" SHIFT VALVE SPRING.
13. SOLENOID "E" SHIFT VALVE BORE PLUG.
14. SOLENOID "E" SHIFT VALVE LINE-UP RETAINER.
15. SOLENOID "C" SHIFT VALVE.
16. SOLENOID "C" SHIFT VALVE SPRING.
17. SOLENOID "C" SHIFT VALVE LINE-UP RETAINER.
18. MAIN CONTROL VALVE.
19. MAIN CONTROL VALVE SPRING.
20. MAIN CONTROL VALVE LINE-UP RETAINER.

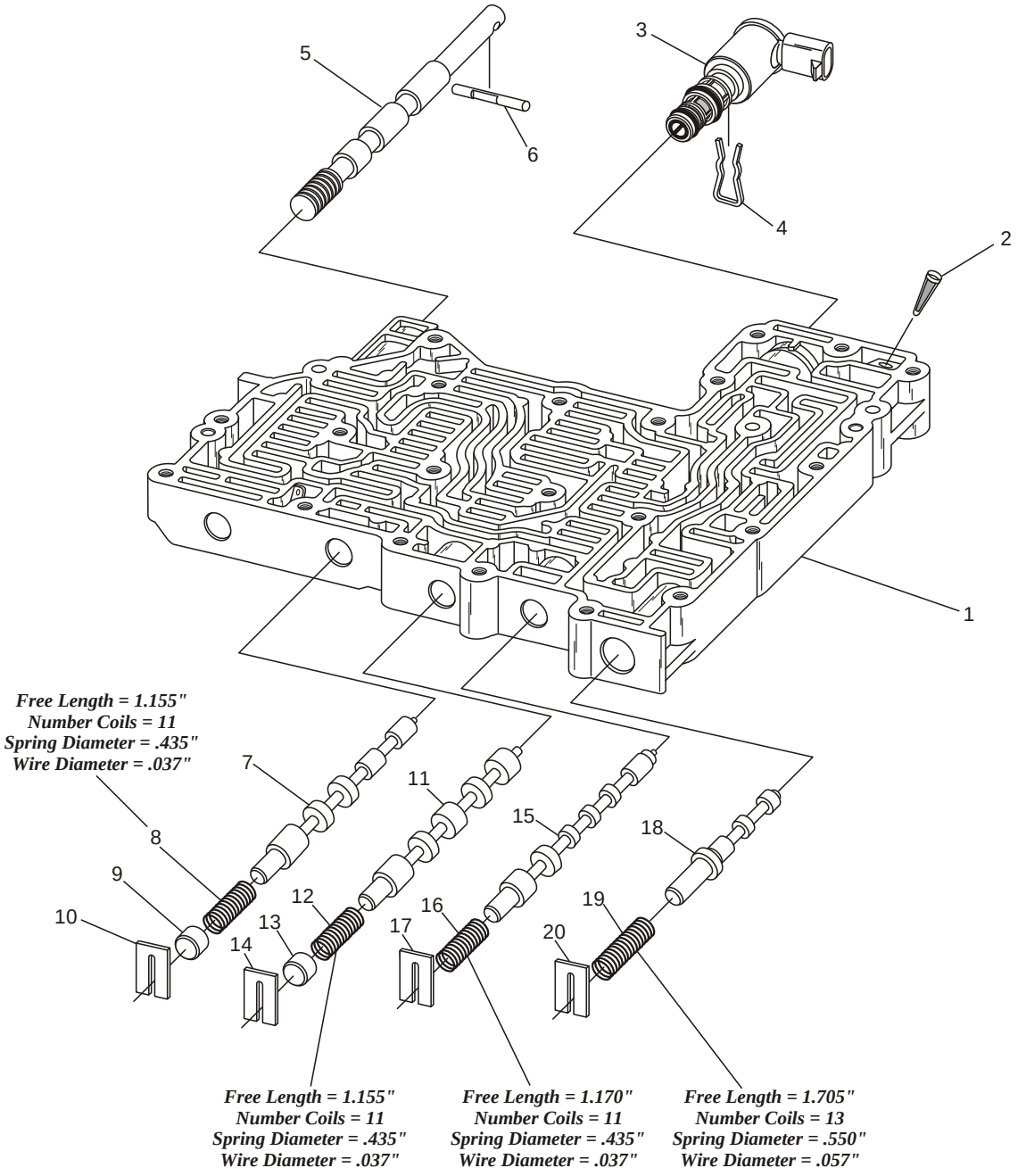

Copyright © 2000 ATSG

Figure 124

CONTINUED FROM PAGE 82

8. Place main valve body on a flat work surface, remove the valve trains one at a time and lay them out in order, as shown in Figure 123.
9. Clean and inspect all main valve body parts thoroughly and dry with compressed air.
10. Assemble the main valve body valve trains ***exactly*** as they are shown in Figure 123.
    Note: Notice that the various spring specs are included in Figure 123, to ensure that they are installed in their proper locations. Lubricate all valves in the main valve body with LubeGard® spray lubricant.
11. Place shift valve body on a flat work surface, remove the valve trains one at a time and lay them out in order, as shown in Figure 124.
12. Clean and inspect all shift valve body parts thoroughly and dry with compressed air.
13. Assemble the shift valve body valve trains ***exactly*** as they are shown in Figure 124.
    Note: Notice that the various spring specs are included in Figure 124, to ensure that they are installed in their proper locations. Lubricate all valves in the shift valve body with LubeGard® spray lubricant.
14. Lay the main valve body on flat work surface as shown in Figure 126, and install the spacer plate over the dowel pins.
15. Install the shift valve body on top of the spacer plate and over dowels, as shown in Figure 126.
16. Turn the entire assembly over on the flat work surface, as shown in Figure 125.
17. Install only 14, M6 x 1.0 x 50mm, main valve body to shift valve body bolts in the locations shown in Figure 125, and snug them down.
    Note: Do not tighten at this time.
18. Install both Trim Solenoids "A" and "B" in the exact locations shown in Figure 127.
    Note: The trim solenoids have different snout dimensions and "O" ring colors, as shown in Figure 127. Ensure that they are installed in their proper locations.
19. Install the trim solenoid retaining bracket and three M6 x 1.0 x 50mm bolts, as shown in Figure 127, and snug them down.
    Note: Do not tighten.

Continued on Page 89

ASSEMBLE SHIFT VALVE BODY TO MAIN VALVE BODY

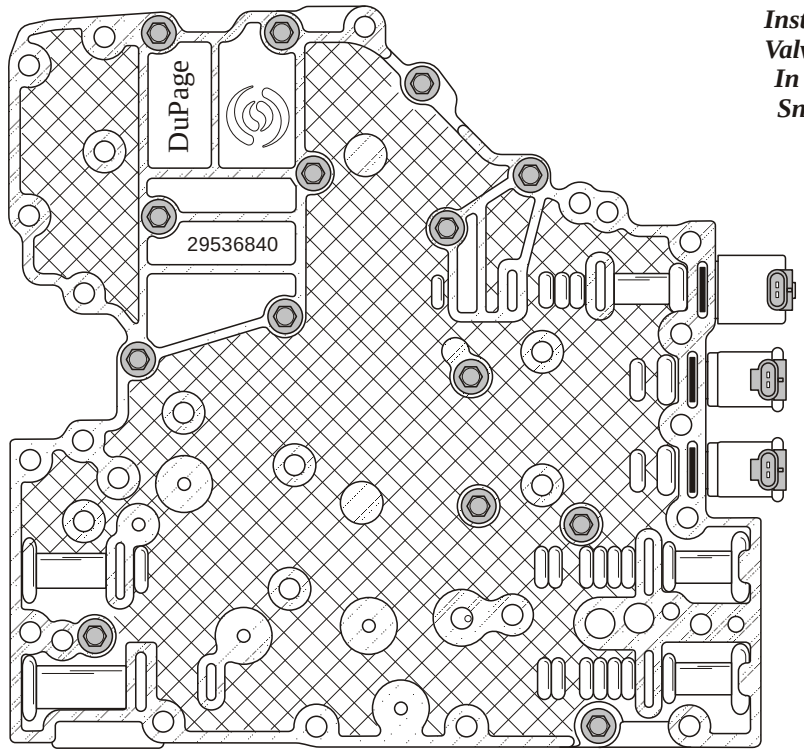

Install 14 Only, M6 X 1.0 X 50, Main Valve Body to Shift Valve Body Bolts, In The Locations Shown Here, and Snug Them Down. Do Not tighten.

8 mm Head

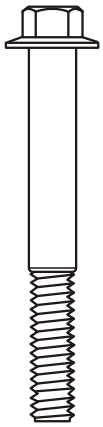

Actual Size

Copyright © 2000 ATSG

Figure 125

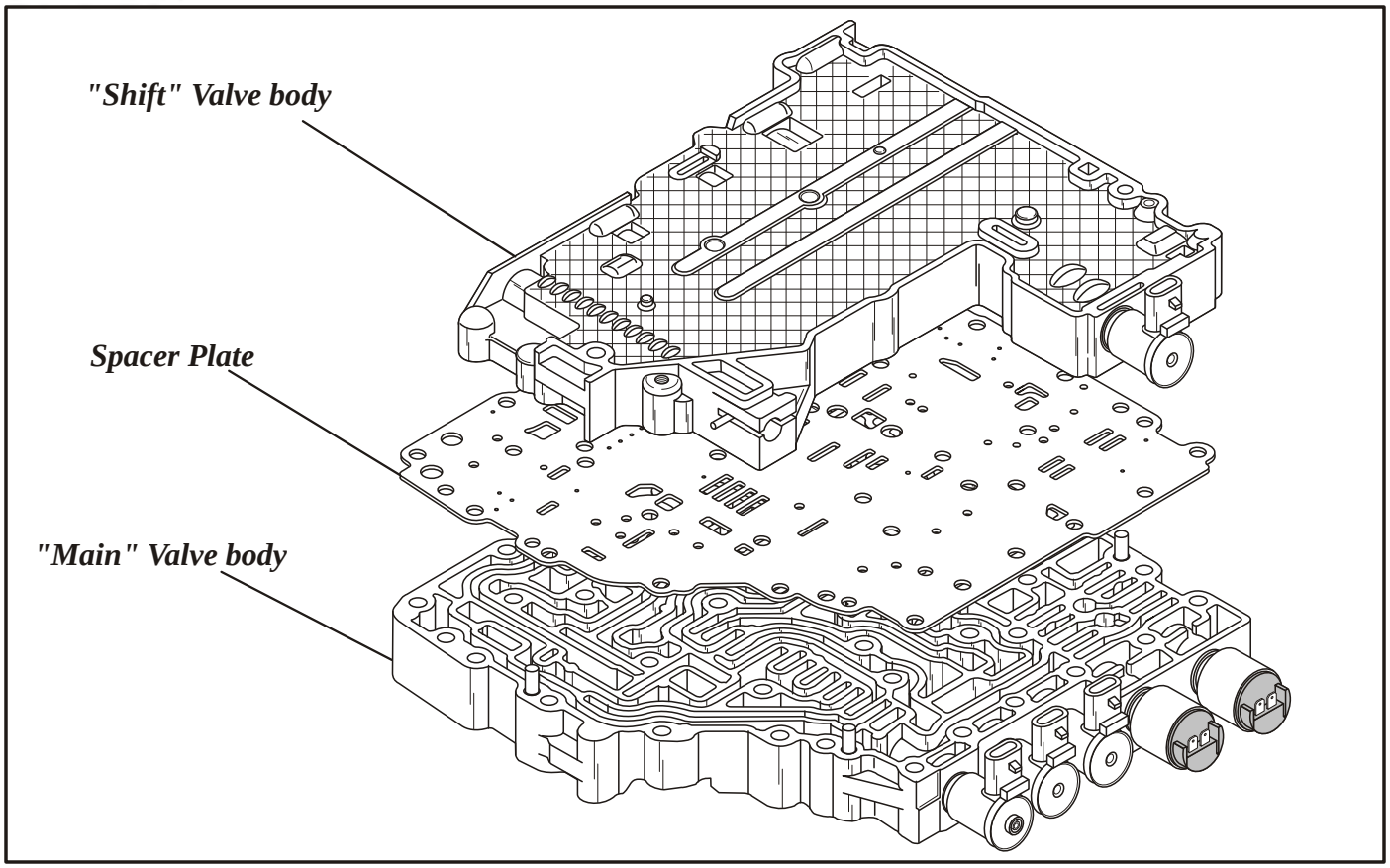

Figure 126

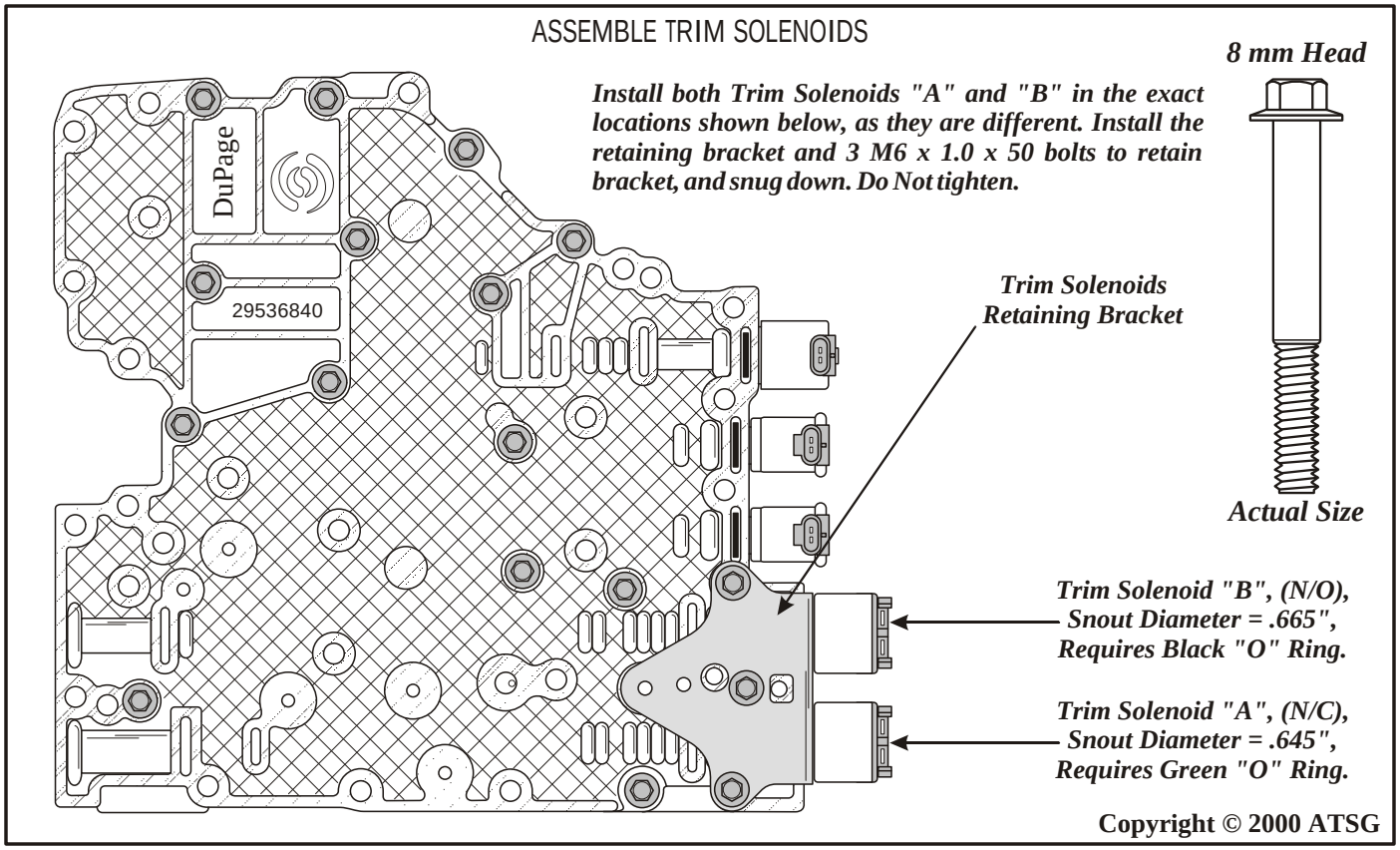

Figure 127

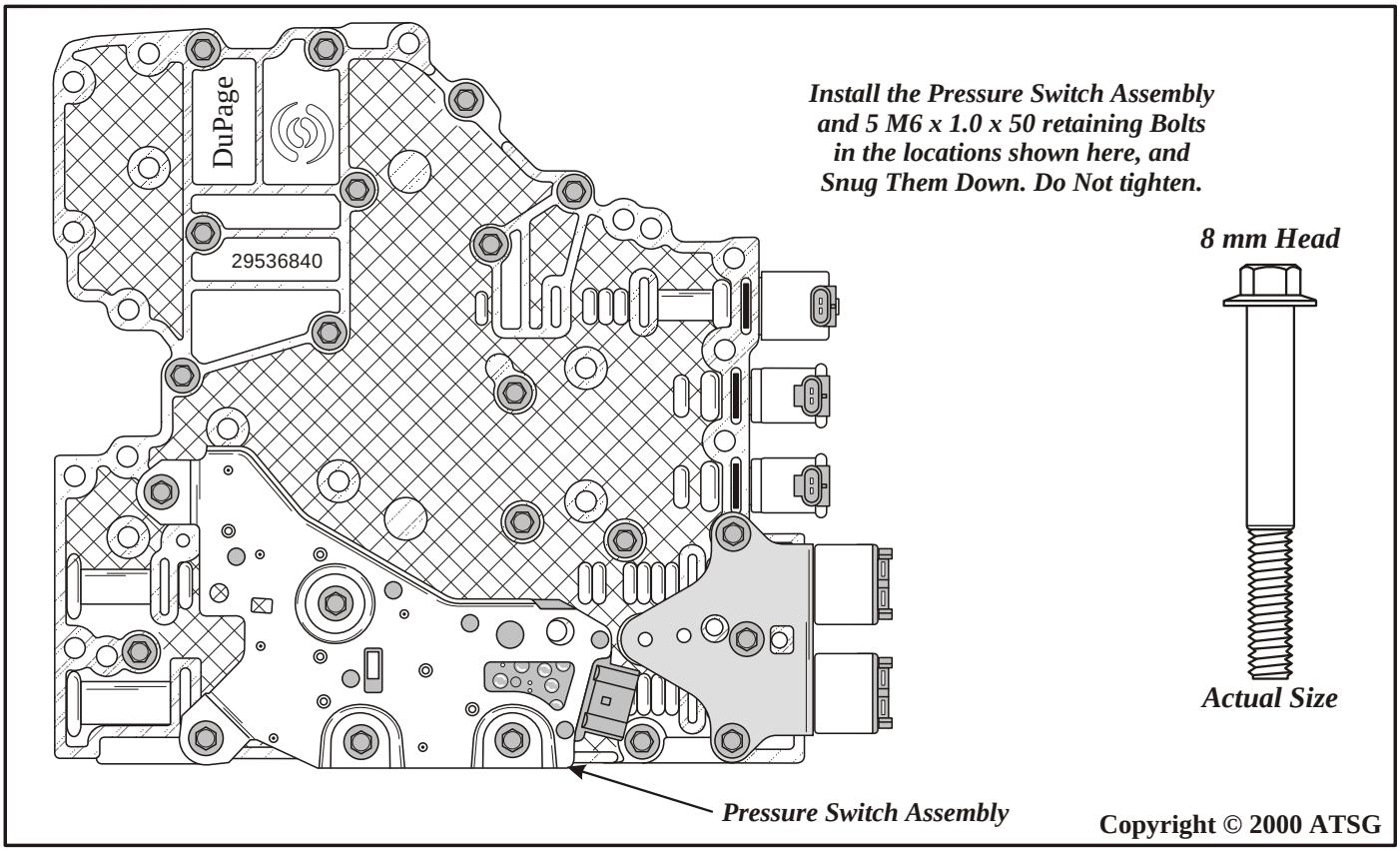

Figure 128

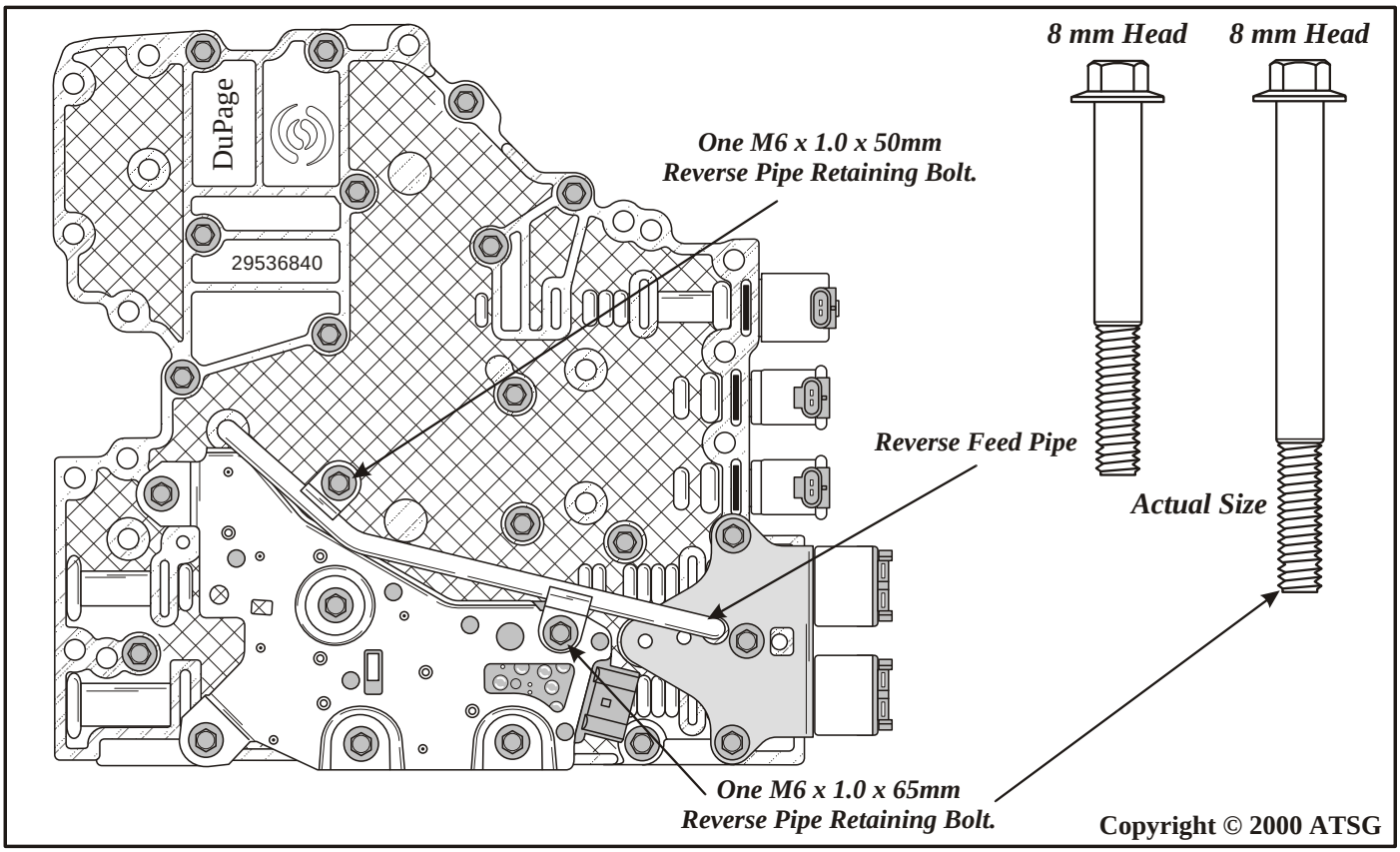

Figure 129

https://truckmanualshub.com/

CONTINUED FROM PAGE 86

20. Inspect the pressure switch assembly to verify the condition and location of the "O" rings on the back side (See Figure 130).
21. One of the six switches in the pressure switch assembly is Normally Closed (N/C) and the other five are Normally Open (N/O), as shown in Figure 130.
    Note: Notice that two of the N.O. switches are not used in this unit (See Figure 130).
22. Check the operation of all switches with your DVOM with the leads placed on the pins on each side of each switch (See Figure 130).
23. To check the resistance values for the TFT sensor, place the leads of the ohmmeter across pins "E" and "F" of pressure switch connector.
    Note: 3088-3942 Ohms @ 20°C (68°F).
    159-198 Ohms @ 100°C (212°F).
24. Install the pressure switch assembly onto the valve body using five M6 x 1.0 x 50mm bolts, and installed only in the locations that are shown in Figure 128, and snug them down.
    Note: Do not tighten at this time.
25. Install the reverse pipe onto the valve body, as shown in Figure 129, using one 50mm long bolt and one 65mm long bolt in the locations shown in Figure 129 and snug them down.
    Note: Do not tighten at this time.
26. Now torque all valve body bolts to 12 N.m, (9 ft.lb), beginning in the center and working outward in a circle (See Figure 129).
    Note: Do not over-torque.

Continued on Page 90

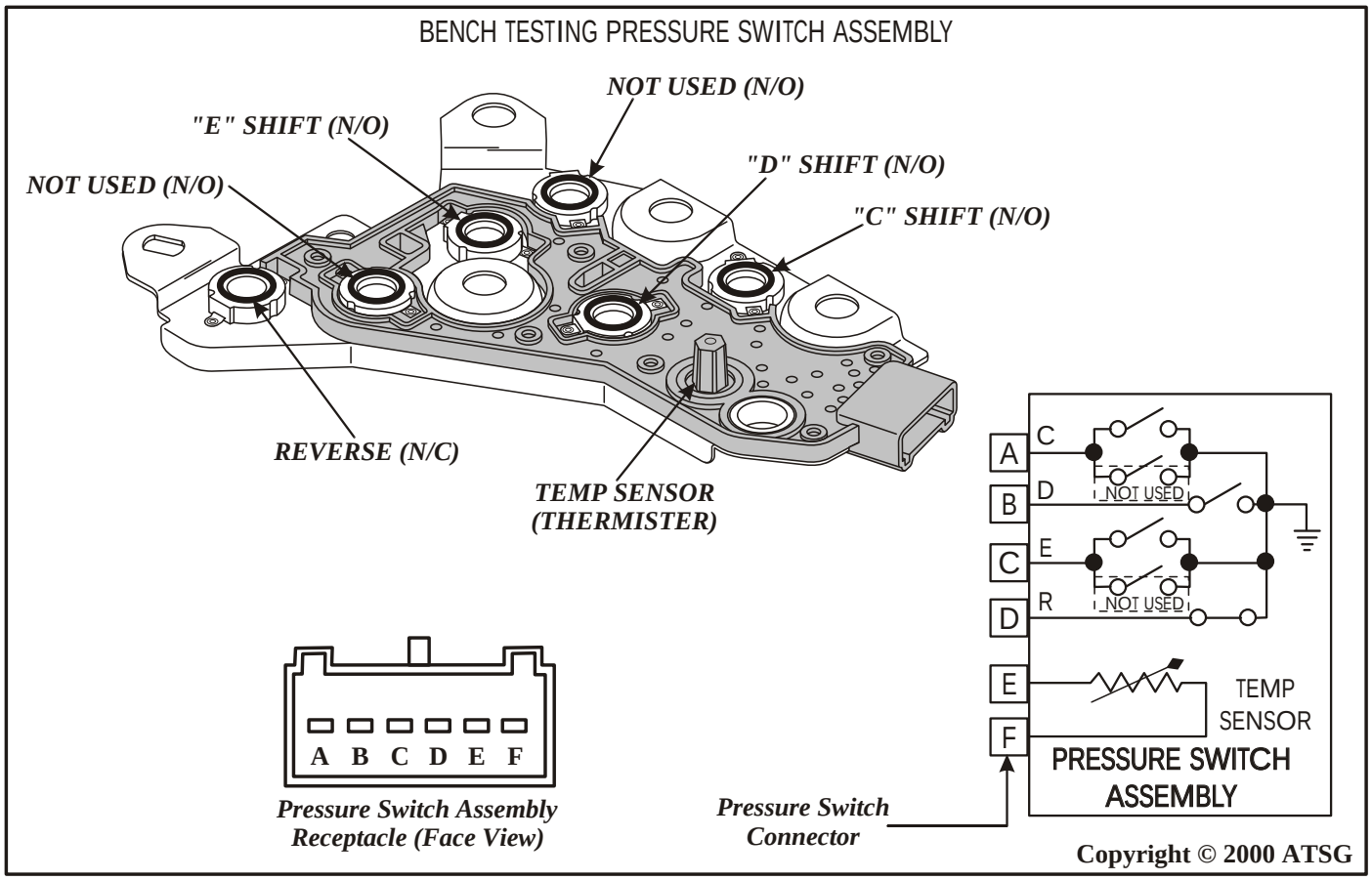

Figure 130

https://truckmanualshub.com/

CONTINUED FROM PAGE 89

27. Orient both trim solenoids, TCC solenoid and shift solenoids with connectors pointed in the direction shown in Figure 131.
28. Install the internal wiring harness assembly, as shown in Figure 131, ensuring that connectors are fully seated and locked.
    Note: The wire harness assembly is retained to the valve body with the two solenoid clips as shown in Figure 131.
29. Install the manual valve into the valve body and the manual valve pin, ensuring that the pin enters the slot in the valve body casting. Refer to Figure 131.
30. Set the completed valve body assembly aside for the final assembly process.

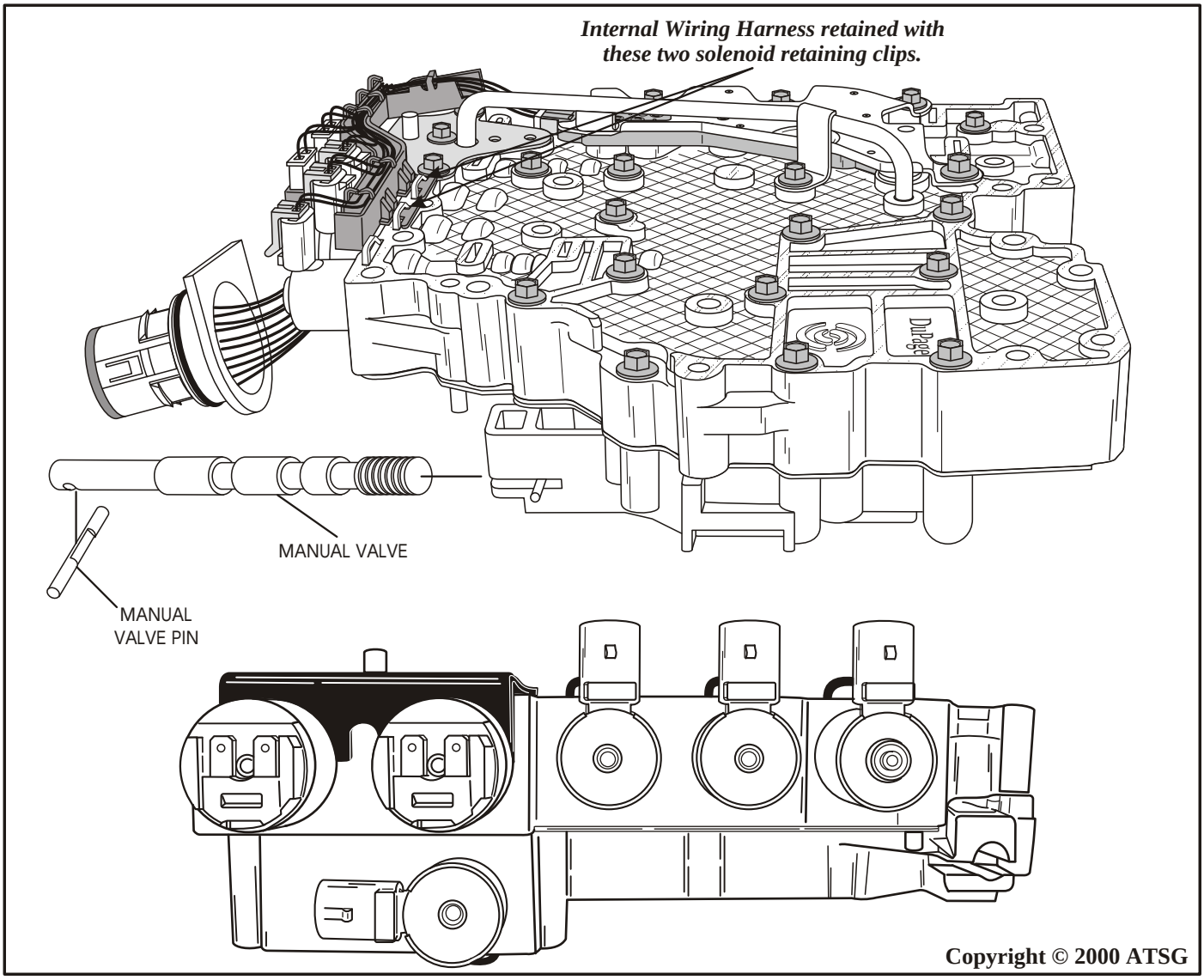

Figure 131

https://truckmanualshub.com/

EXTENSION HOUSING FOR TWO WHEEL DRIVE

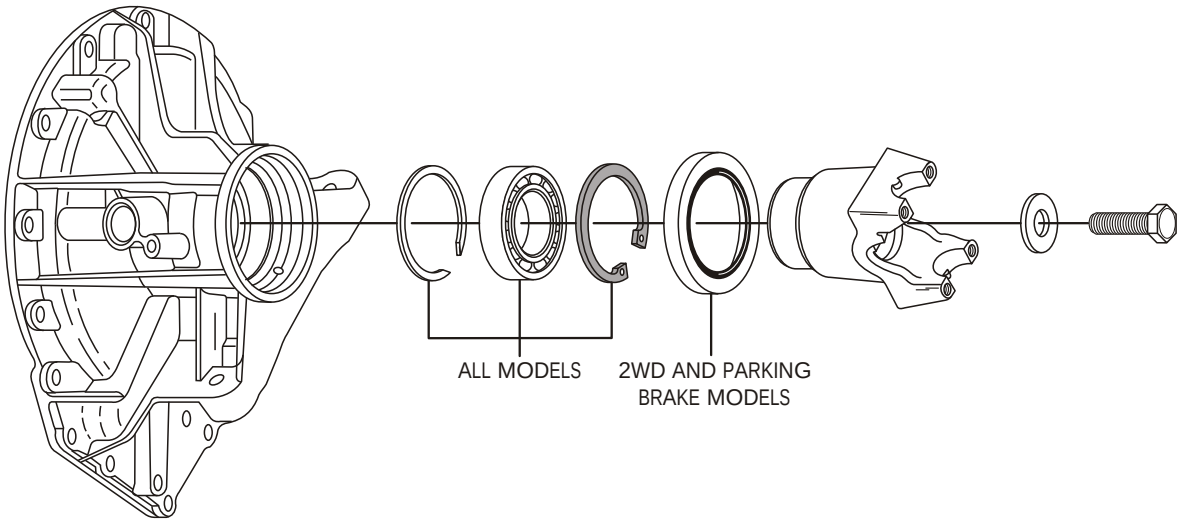

EXTENSION HOUSING FOR MODELS WITH PARKING BRAKE

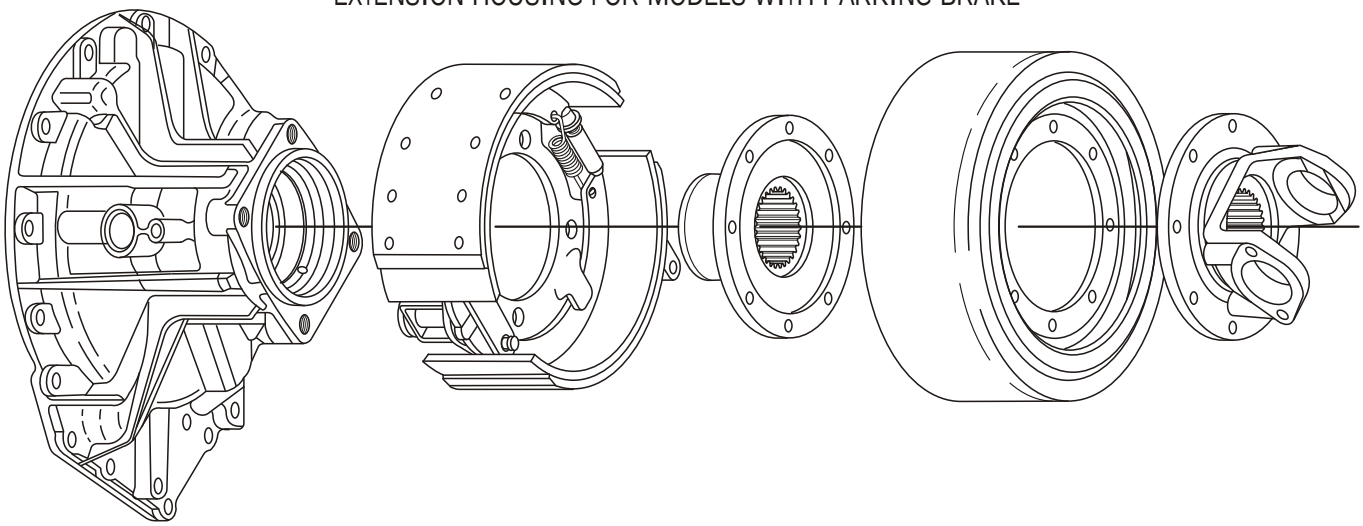

EXTENSION HOUSING FOR FOUR WHEEL DRIVE

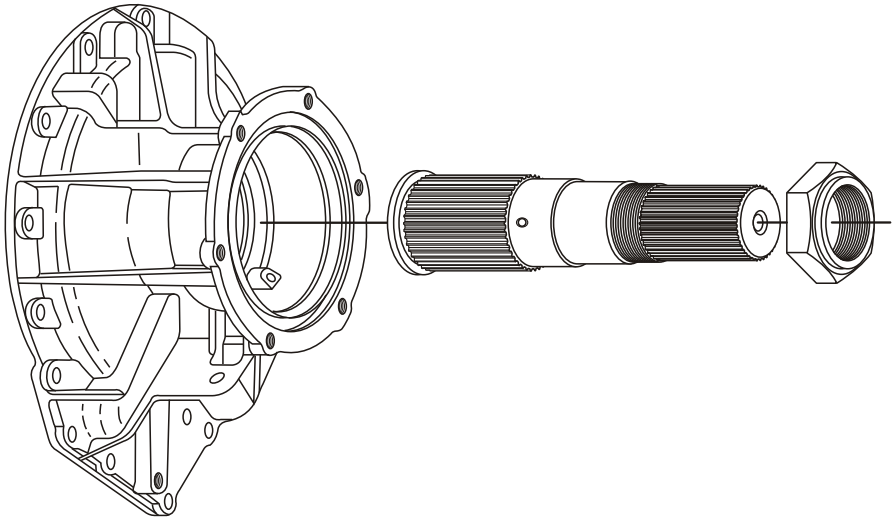

Copyright © 2000 ATSG

Figure 132

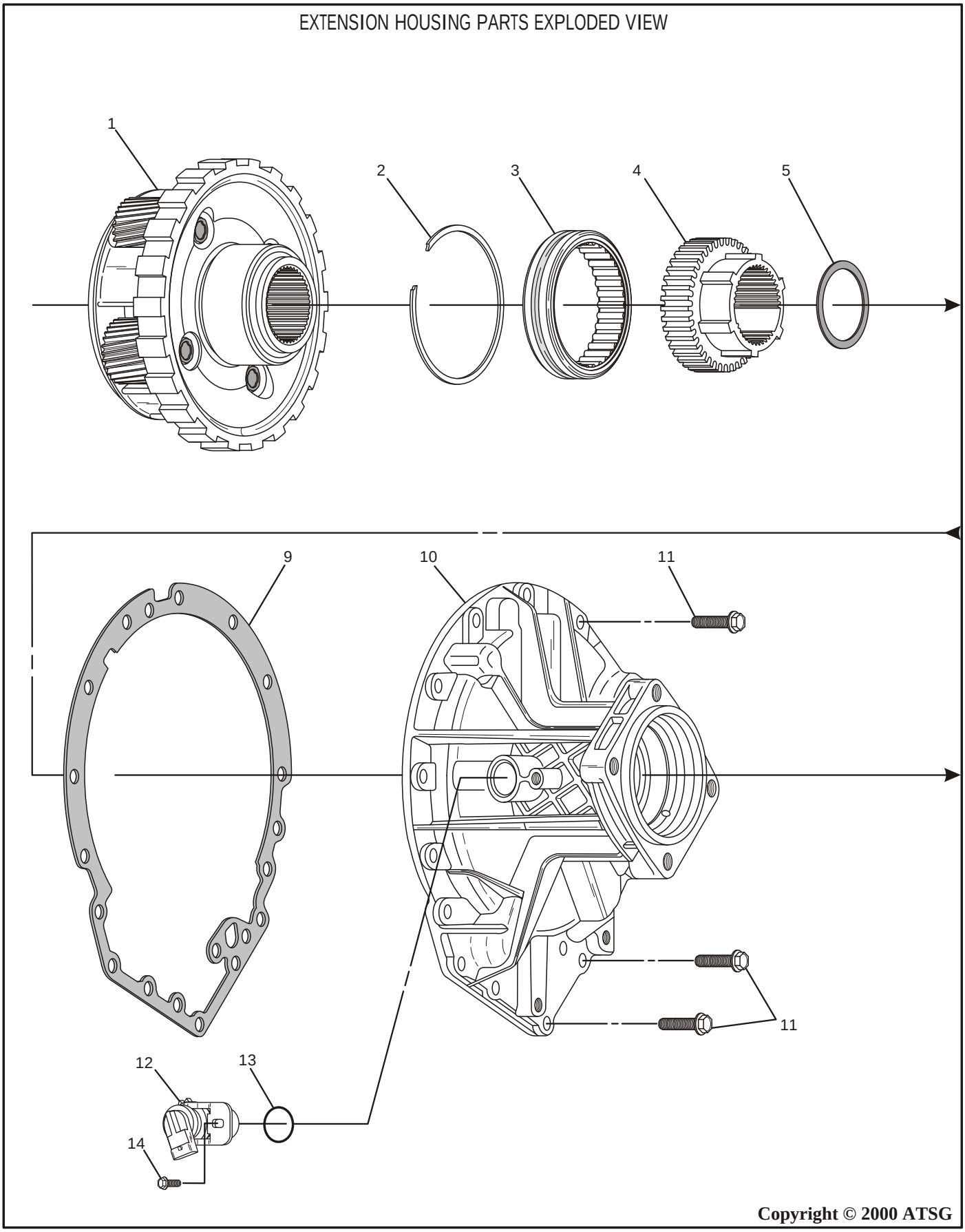
EXTENSION HOUSING PARTS EXPLODED VIEW
1
2
3
4
5
9
10
11
11
12
13
14
Copyright © 2000 ATSG

Figure 133

https://truckmanualshub.com/

EXTENSION HOUSING PARTS EXPLODED VIEW

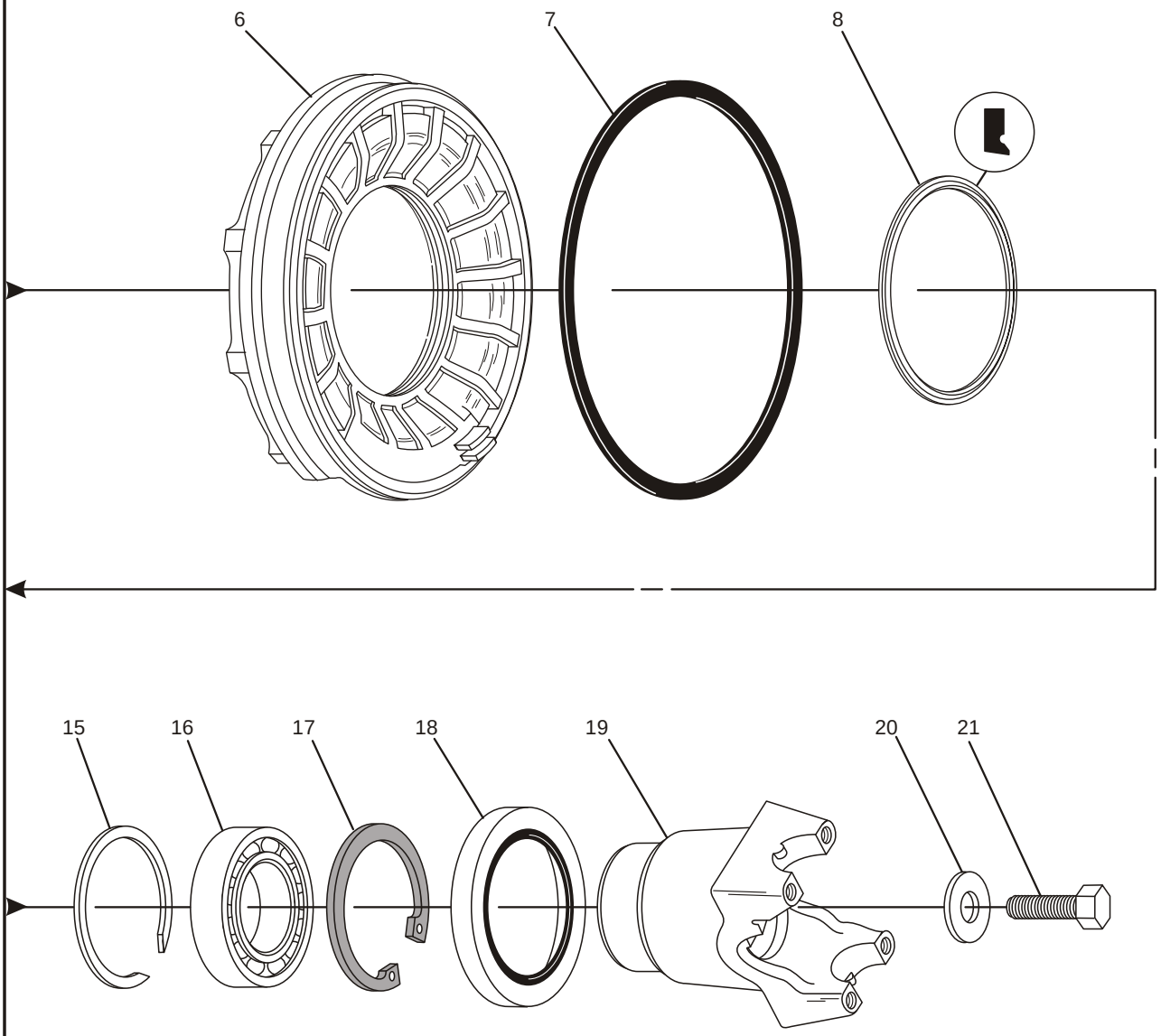

1. P-3 PLANETARY CARRIER. (REFERENCE ONLY)
2. CAGED NEEDLE BEARING RETAINING SNAP RING.
3. CAGED NEEDLE BEARING ASSEMBLY.
4. OUTPUT SPEED SENS OR TONE WHEEL (MODEL SENSITIVE).
5. "SELECTIVE" SPACER.
6. C -5 CLUTCH PISTON ASSEMBLY.
7. C -5 CLUTCH PISTON OUTER "D" RING SEAL.
8. C -5 CLUTCH PISTON INNER LIP SEAL.
9. EXTENSION HOUSING TO CASE GASKET.
10. EXTENSION HOUSING (MODEL SENSITIVE).
11. EXTENSION HOUSING BOLTS, M10 x 1.5 x 40 (16 REQUIRED).
12. OUTPUT SHAFT SPEE D SENSOR (MODEL SENSITIVE).
13. OUTPUT SHAFT SPEED SENSOR "O" RING.
14. SPEED SENSOR RETAINING BOLT, M6 x 1.0 x 13.
15. FRETTING RING.
16. BALL BEARING ASSEMBLY.
17. BALL BEARING RETAINING SNAP RING.
18. EXTENSION HOUSING METAL CLAD SEAL (MODEL SENSIITIVE).
19. TRANSMISSIONYOKE ASSEMBLY (MODEL SENSITIVE).
20. YOKE WASHER (MODEL SENSITIVE).
21. YOKE RETAINING BOLT, 1/2"-20 (MODEL SENSITIVE).

Copyright © 2000 ATSG

Figure 134

COMPONENT REBUILD (Cont'd)

EXTENSION HOUSING ASSEMBLY

1. Disassemble the extension housing assembly using Figures 133 and 134 as a guide.
2. Remove and discard the C5 clutch piston seals from the C5 clutch piston.
3. Inspect all extension housing parts for any wear and/or damage.
4. Clean all extension housing parts thoroughly and dry with compressed air.
5. Position the extension housing on a flat work surface with the rear facing up, as shown in Figure 135.
6. Install the ball bearing fretting ring into the extension housing bore (See Figure 135).
7. Install the ball bearing and the retaining snap ring, as shown in Figure 135.
   Note: Ensure the snap ring is fully seated.
8. Install the rear metal clad seal (if used) into the extension housing, using the proper seal driver as shown in Figure 135.
9. Turn the extension housing over so the front side is facing up, as shown in Figure 136.
10. Install the selective spacer against ball bearing in extension housing (See Figure 136).
11. Install output speed sensor tone wheel (if used) in the direction shown in Figure 136.

Continued on Page 95

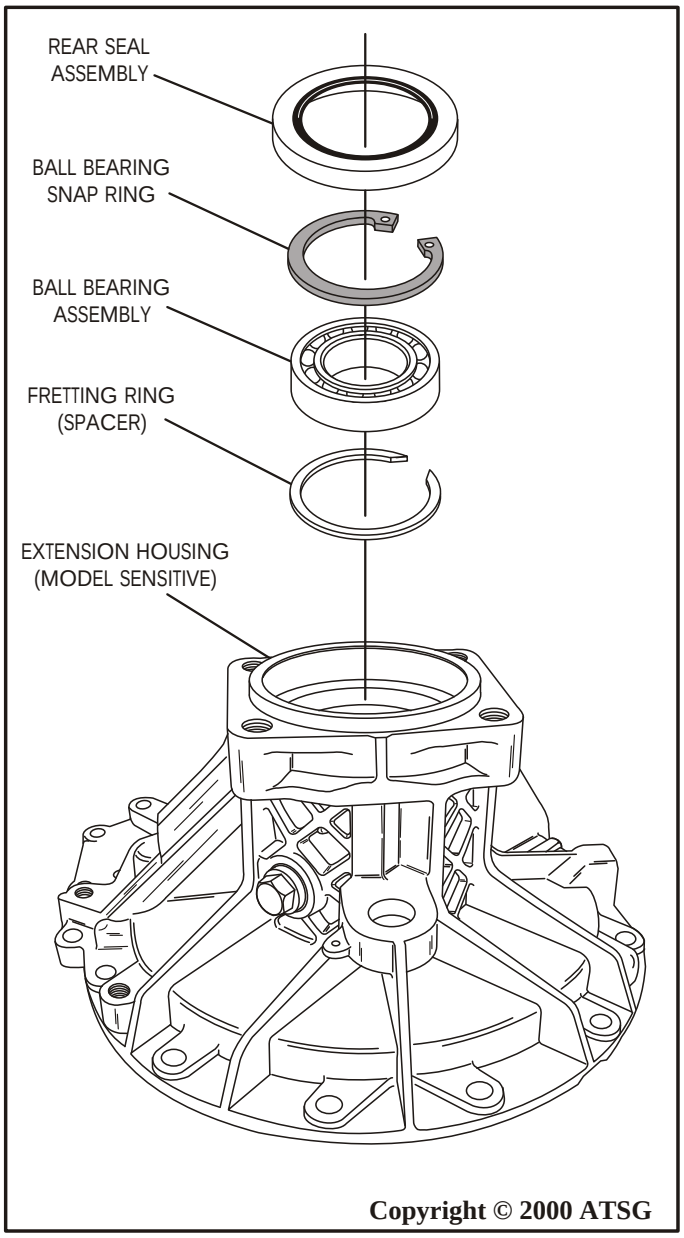

Figure 135

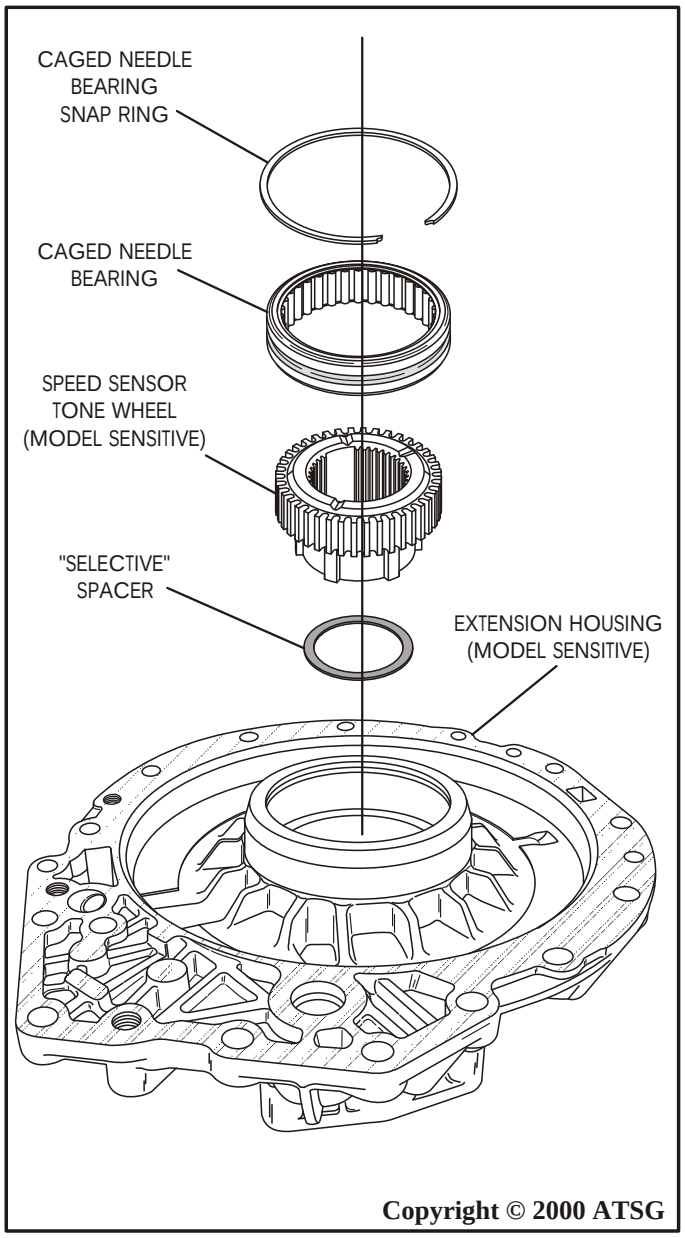

Figure 136

https://truckmanualshub.com/

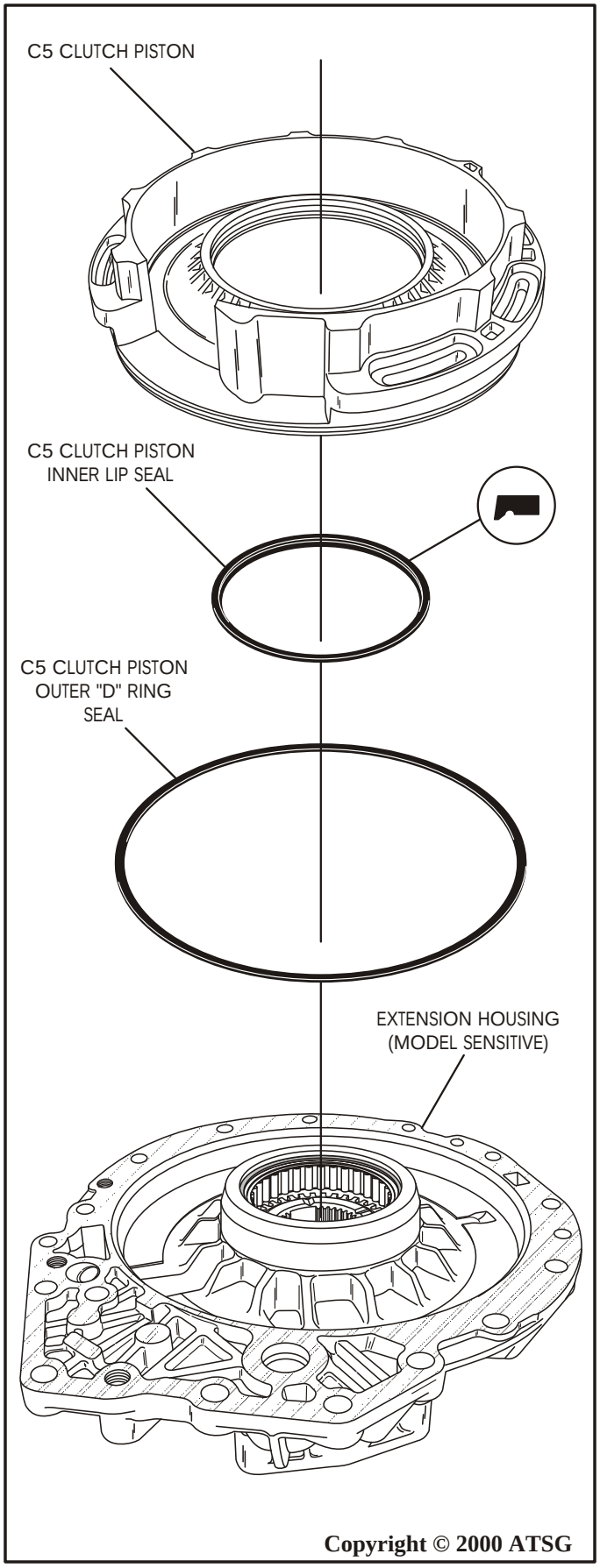

Figure 137

CONTINUED FROM PAGE 94

12. Install caged needle bearing in the extension housing bore, as shown in Figure 136.
13. Install the caged needle bearing retaining snap ring, as shown in Figure 136.
    Note: Ensure the snap ring is fully seated.
14. Install the C5 clutch piston inner lip seal into the piston with the lip facing direction shown in Figure 137.
15. Install the C5 clutch piston outer "D" ring seal into the groove in piston (See Figure 137).
16. Lubricate both piston seals, and seal surfaces in the extension housing with a small amount of TransJel® (See Figure 137).
17. Install the C5 clutch piston assembly into the extension housing, using care so as not to cut or damage the seals (See Figure 137).
18. Set the completed extension housing assembly aside for the final assembly process.

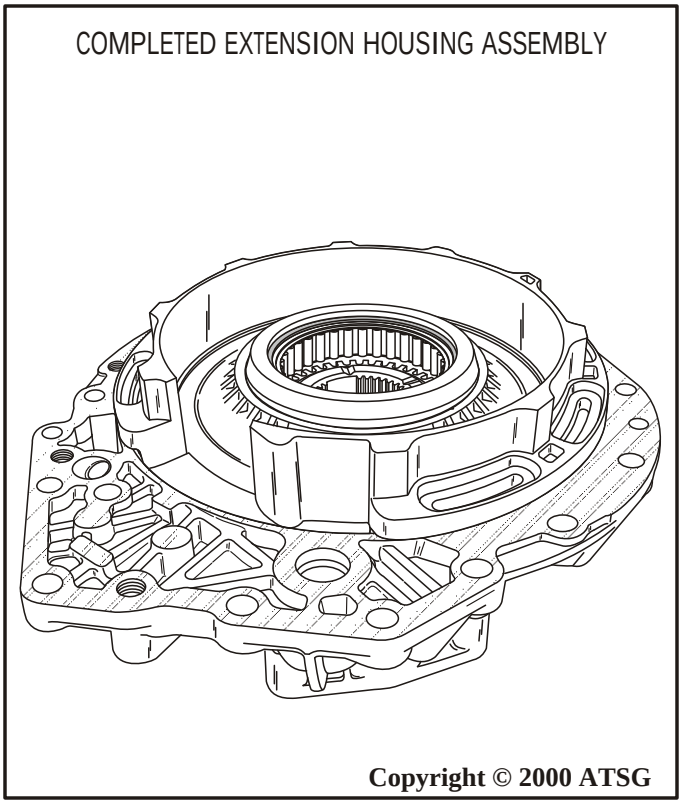

Figure 138

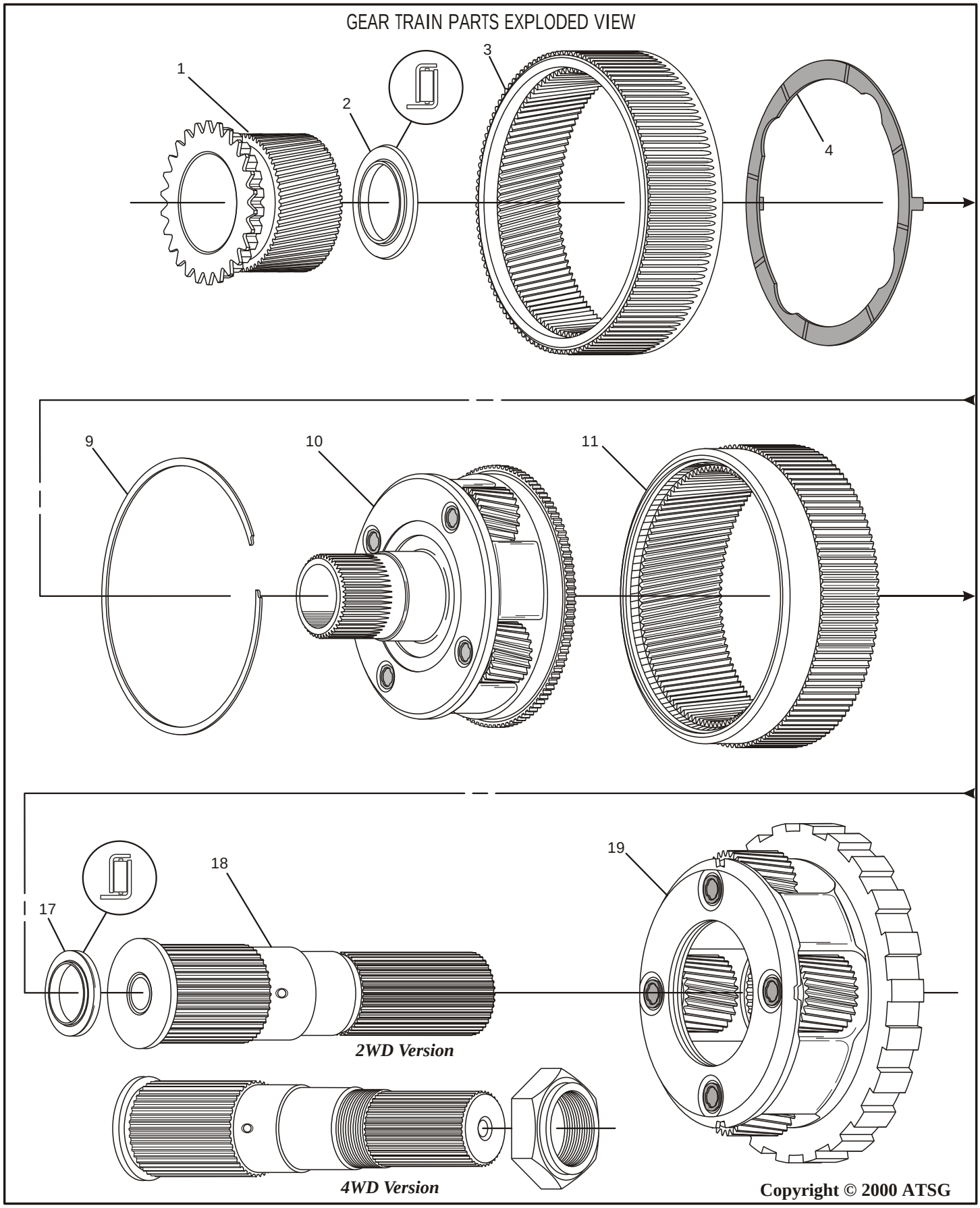
GEAR TRAIN PARTS EXPLODED VIEW
1
2
3
4
9
10
11
17
18
19
2WD Version
4WD Version
Copyright © 2000 ATSG

Figure 139

https://truckmanualshub.com/

GEAR TRAIN PARTS EXPLODED VIEW

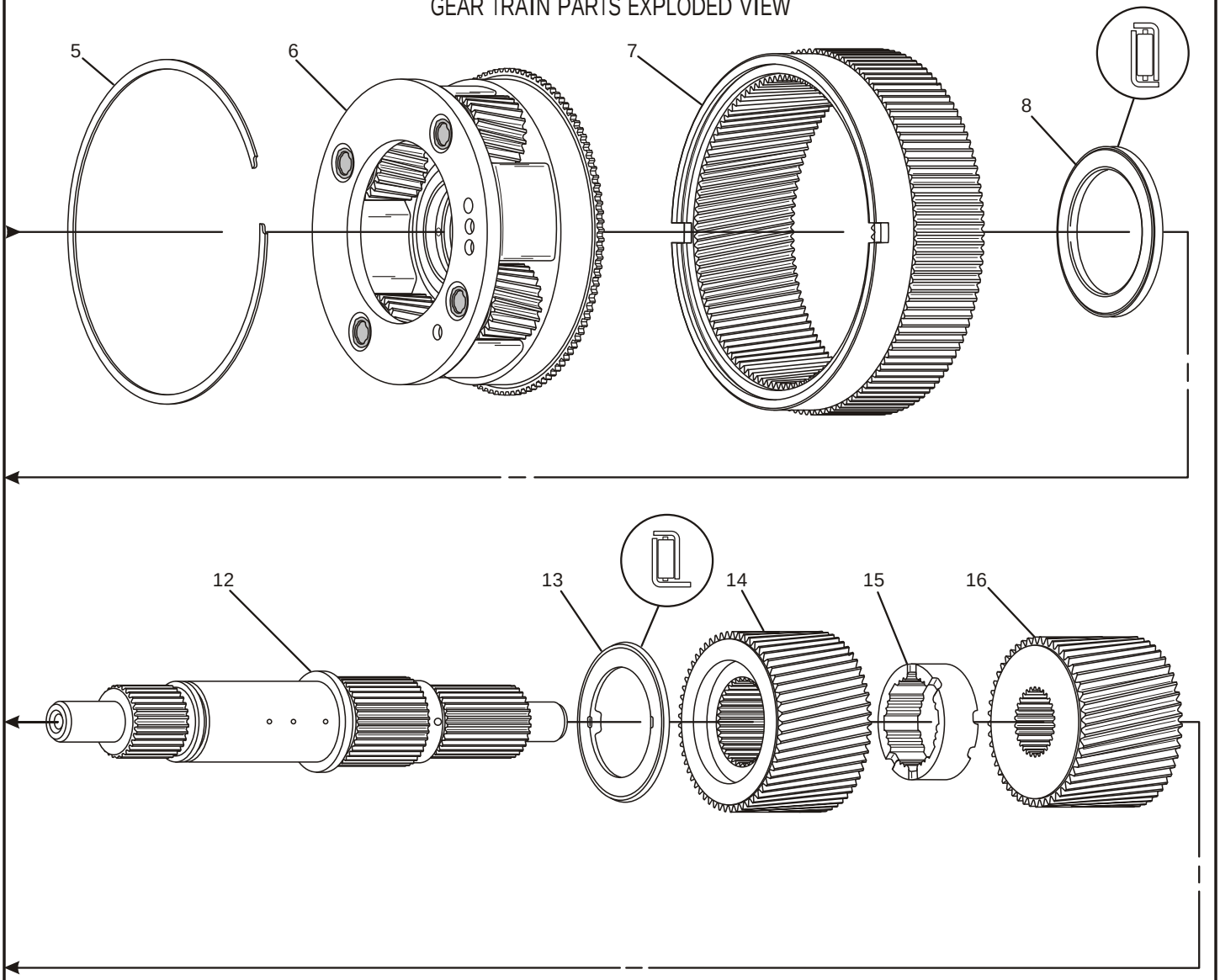

1. INPUT SUN GEAR, P1SUN GEAR (INSTALLED IN C1/C2 HOUSING).
2. INPUT SUN GEAR/P1 PLANETARY CARRIER THRUST BEARING.
3. P1 PLANETARY INTERNAL RING GEAR.
4. P1 RING GEAR/P2 RING GEAR "PEEK" THRUST WASHER.
5. P1 PLANETARY SNAP RING, RETAINS P2 INTERNAL RING GEAR.
6. P1 PLANETARY CARRIER ASSEMBLY.
7. P2 PLANETARY INTERNAL RING GEAR.
8. P1 PLANETARY CARRIER/P2 PLANETARY CARRIER THRUST BEARING.
9. P2 PLANETARY SNAP RING, RETAINS P3 INTERNAL RING GEAR.
10. P2 PLANETARY CARRIER ASSEMBLY.
11. P3 PLANETARY INTERNAL RING GEAR.
12. TRANSMISSION MAIN SHAFT.
13. P2 PLANETARY CARRIER/P2 SUN GEAR THRUST BEARING.
14. P2 SUN GEAR.
15. SUN GEAR SPACER.
16. P3 SUN GEAR.
17. P3 SUN GEAR/OUTPUT SHAFT THRUST BEARING.
18. OUTPUT SHAFT (MODEL SENSITIVE)..
19. P3 PLANETARY CARRIER ASSEMBLY.

Copyright © 2000 ATSG

Figure 140

COMPONENT REBUILD (Cont'd)

GEAR TRAIN ASSEMBLY

1. Inspect all gear train parts thoroughly, that are shown in Figures 139 and 140, for any wear and/or damage.
2. Check all 3 planetary carriers for proper pinion end play with a feeler gage (See Figure 143). ***Note: End play should be .020"-.030".***
3. Lay the P2 ring gear (with notches) on a flat work surface in direction shown in Figure 141.
4. Install the P1 planetary carrier into the splines of the P2 ring gear, and install the P1 planetary snap ring, as shown in Figure 141.
5. Install the P1/P2 ring gear thrust washer onto the assembly as shown in Figure 142. ***Note: This thrust washer will "Snap" in place when it is fully seated.***
6. Set the completed P1 planetary assembly aside for final assembly (See Figure 145).
7. Lay the P3 ring gear (no notches) on the flat work surface in direction shown in Figure 144.
8. Install the P2 planetary carrier into the splines of the P3 ring gear, and install the P2 planetary snap ring, as shown in Figure 144.
9. Set the completed P2 planetary assembly aside for final assembly (See Figure 145).
10. After P3 planetary carrier has been inspected and correct pinion end play has been verified, set it aside for final assembly (See Figure 145).

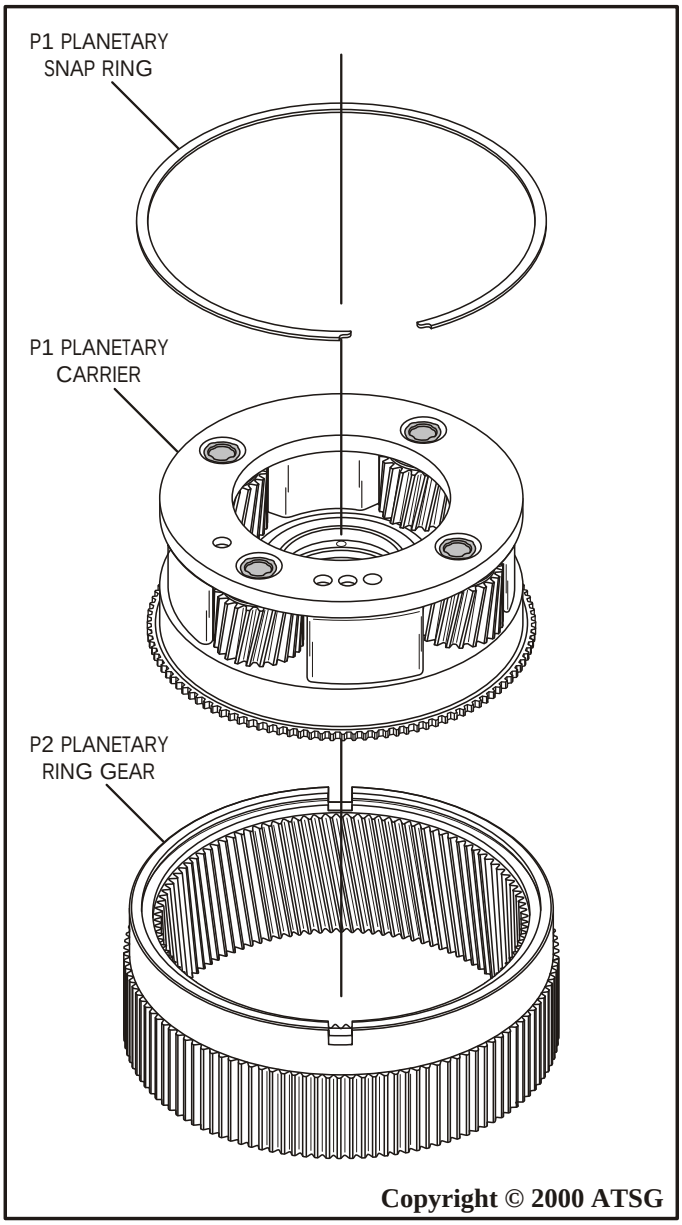

Figure 141

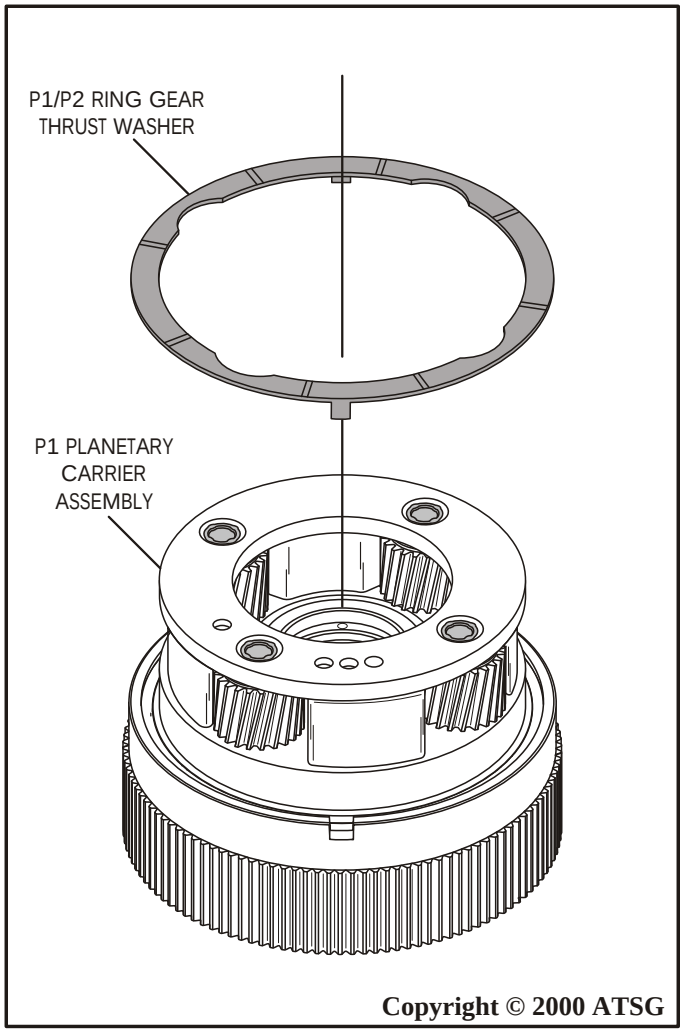

Figure 142

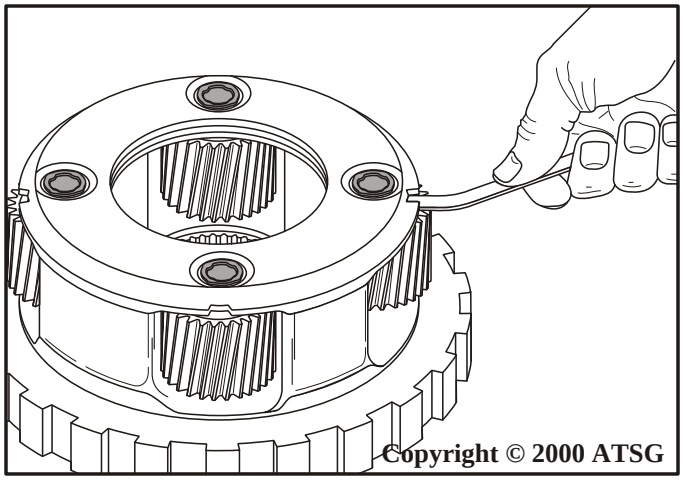

Figure 143

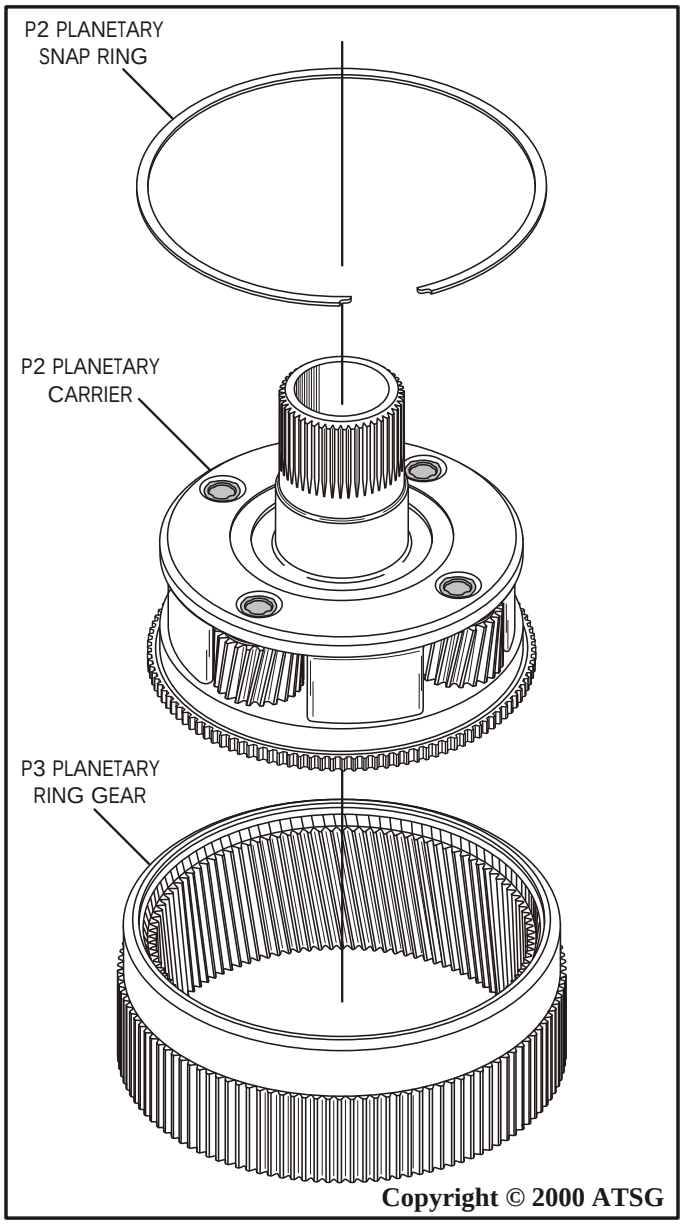

Figure 144

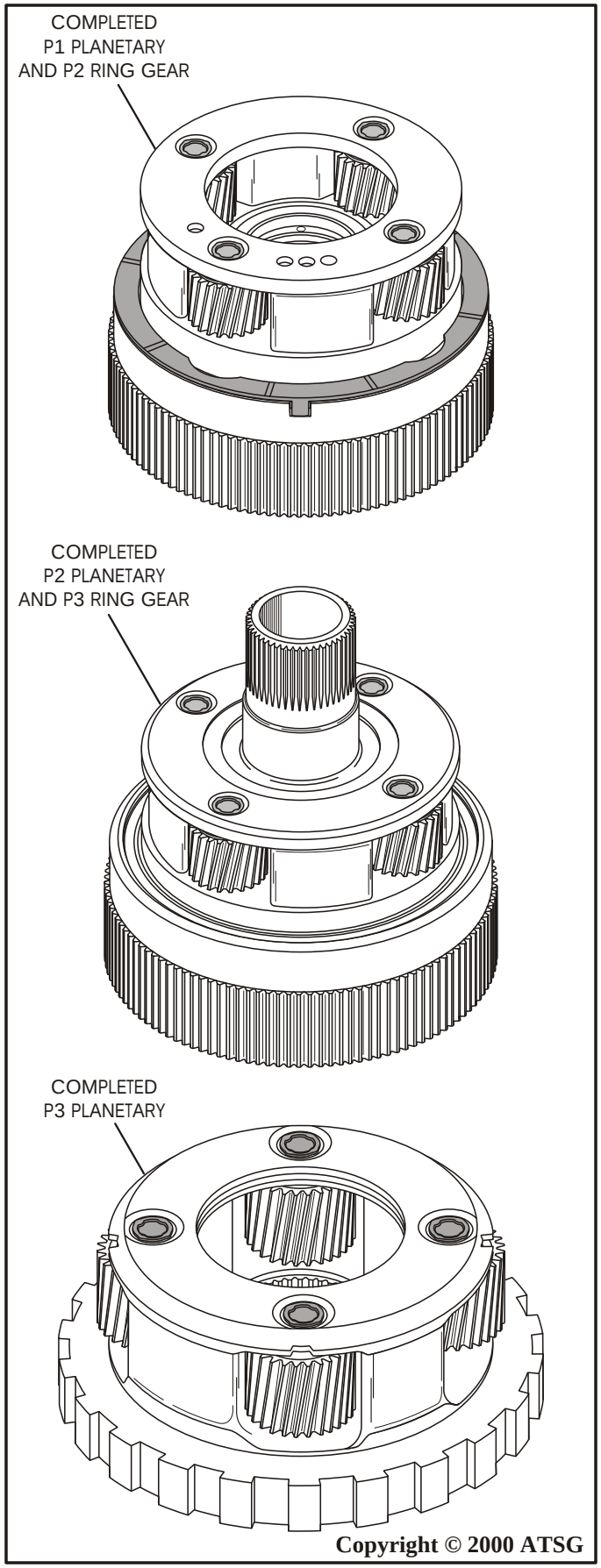

Figure 145

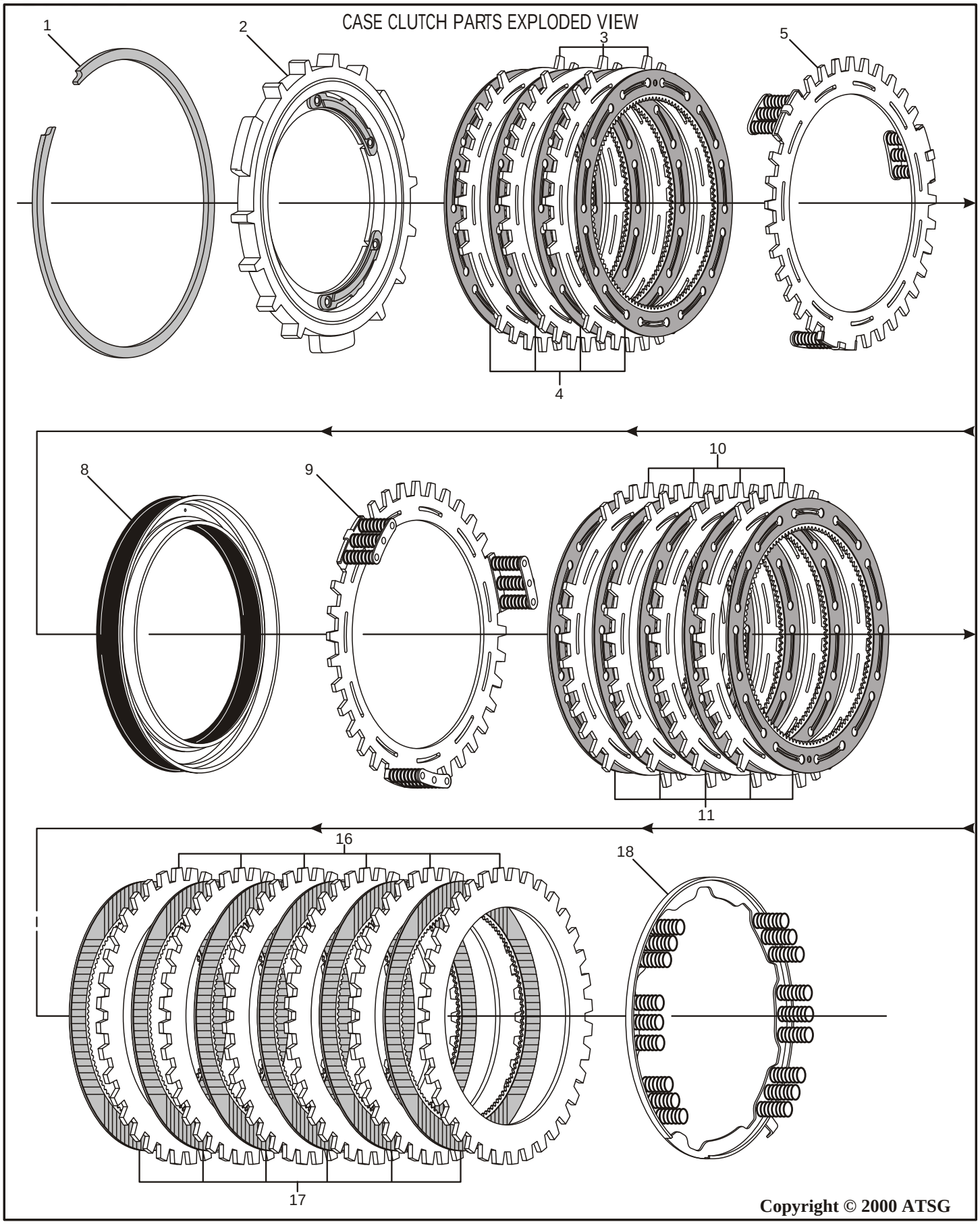
CASE CLUTCH PARTS EXPLODED VIEW
1
2
3
4
5
8
9
10
11
16
17
18
Copyright © 2000 ATSG

Figure 146

https://truckmanualshub.com/

CASE CLUTCH PARTS EXPLODED VIEW

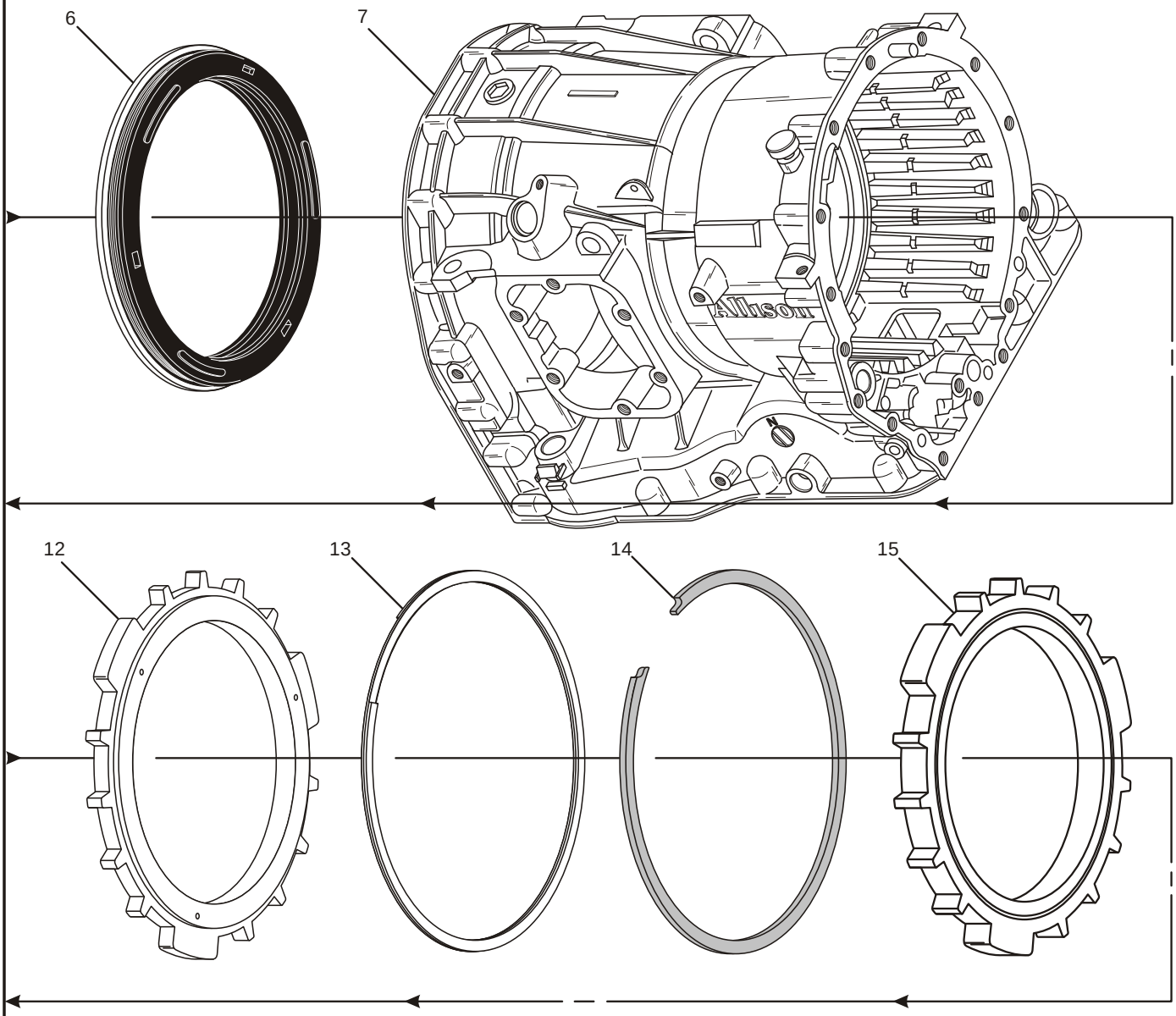

1. C3 CLUTCH BACKING PLATE RETAINING SNAP RING.
2. C3 CLUTCH BACKING PLATE ASSEMBLY.
3. C3 CLUTCH STEEL PLATES, .097" THICK (3 REQUIRED).
4. C3 CLUTCH LINED PLATES (4 REQUIRED).
5. C3 CLUTCH APPLY PLATE WITH SPRINGS, .125" THICK.
6. C3 CLUTCH MOLDED PISTON ASSEMBLY.
7. TRANSMISSION MAIN CASE ASSEMBLY.
8. C4 CLUTCH MOLDED PISTON ASSEMBLY.
9. C4 CLUTCH APPLY PLATE WITH SPRINGS .125" THICK.
10. C4 CLUTCH STEEL PLATES, .097" THICK (4 REQUIRED).
11. C4 CLUTCH LINED PLATES (5 REQUIRED).
12. C4 CLUTCH BACKING PLATE.
13. C4 CLUTCH "SPIRAL" SNAP RING.
14. C4 CLUTCH BACKING PLATE SNAP RING.
15. C5 CLUTCH BACKING PLATE.
16. C5 CLUTCH "SELECTIVE" STEEL PLATES, .097" THICK (6 REQUIRED).
16. C5 "SELECTIVE" STEEL PLATE, 1.935 - 2.065mm (.076" - .081").
16. C5 "SELECTIVE" STEEL PLATE, 2.435 - 2.565mm (.096" - .101").
16. C5 "SELECTIVE" STEEL PLATE, 2.935 - 3.065mm (.115" - .120").
17. C5 CLUTCH LINED PLATES (6 REQUIRED).
18. C5 CLUTCH RETURN SPRING ASSEMBLY.

Copyright © 2000 ATSG

Figure 147

https://truckmanualshub.com/

FINAL TRANSMISSION ASSEMBLY

1. Rotate the transmission in the fixture so that the rear of the transmission is facing up, as shown in Figure 148.
2. Install P1 planetary ring gear into previously installed C3 lined plates, by turning back and forth, until ring gear teeth are engaged on all C3 plates and fully seated against the washer surface of C3 backing plate (See Figure 148).
3. Inspect the C4 clutch molded apply piston and replace as necessary (See Figure 149).
4. Lubricate C4 clutch piston with a small amount of TransJel®, and install into the case bore, as shown in Figure 149.
5. Install the three return spring assemblies onto the wide tabs of C4 apply plate and install the apply plate assembly on top of the piston, as shown in Figure 150.
6. Install the C4 clutch pack beginning with a lined plate on top of the apply plate, as shown in Figure 150, and alternating with a steel plate until you have installed the required four steel plates and five lined plates.
7. Install the C4 clutch backing plate into the case in the direction shown in Figure 150.
8. Install the "spiral" snap ring into case groove as shown in Figure 151.
9. Install the C4 clutch backing plate snap ring into the ***same groove as the spiral snap ring,*** as shown in Figure 151.

Continued on Page 104

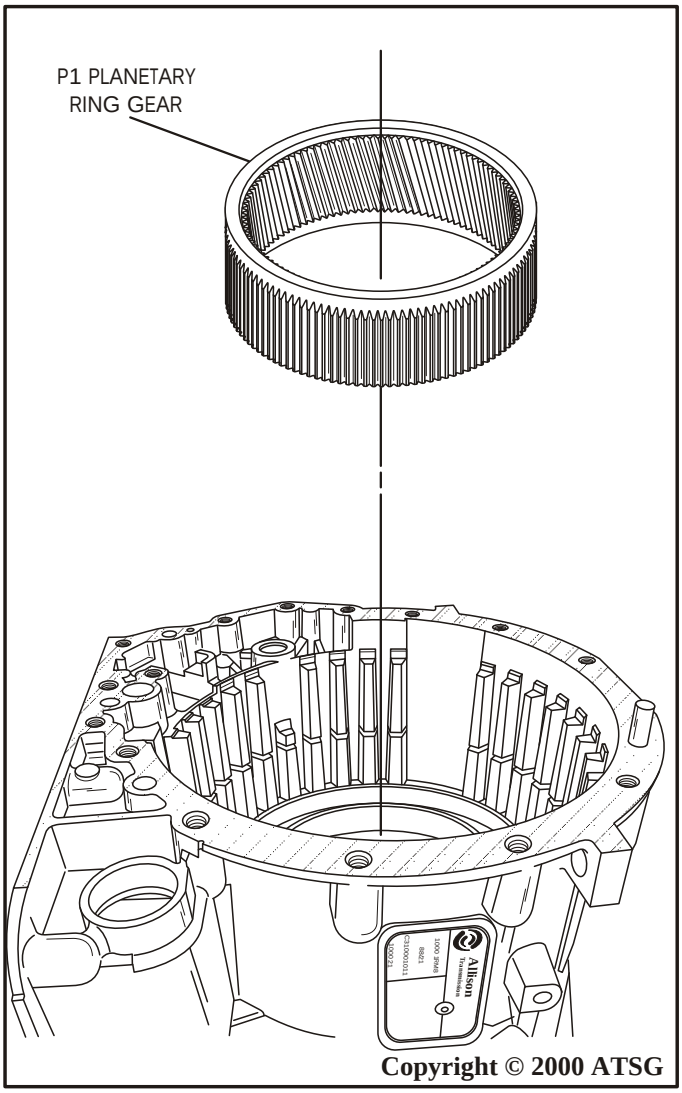

Figure 148

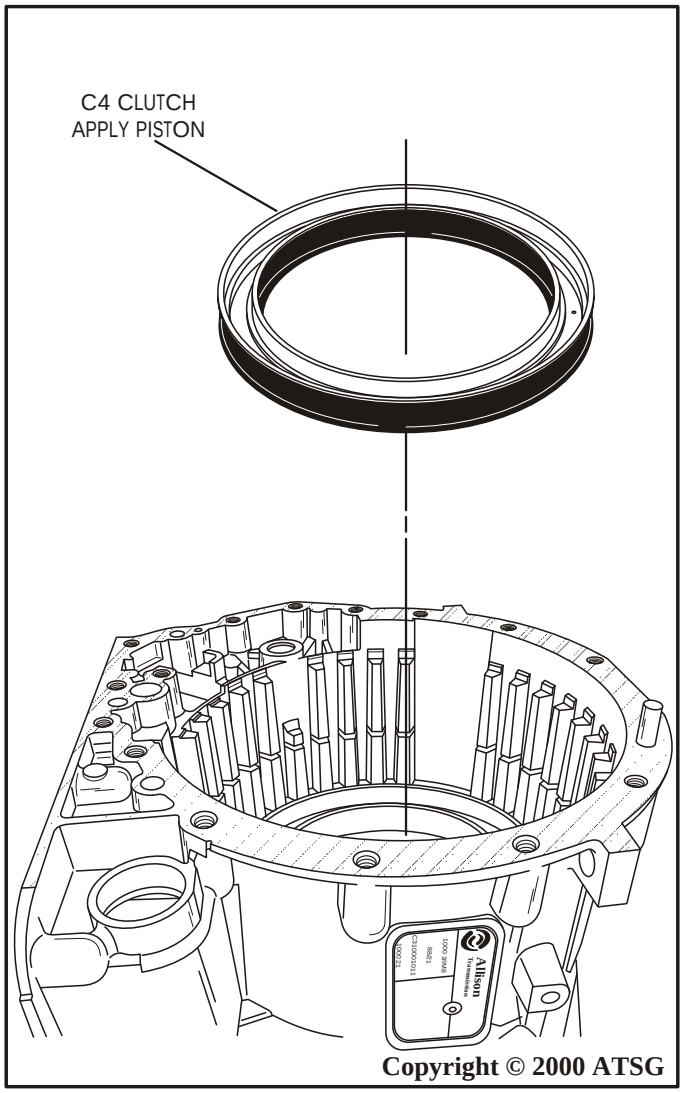

Figure 149

https://truckmanualshub.com/

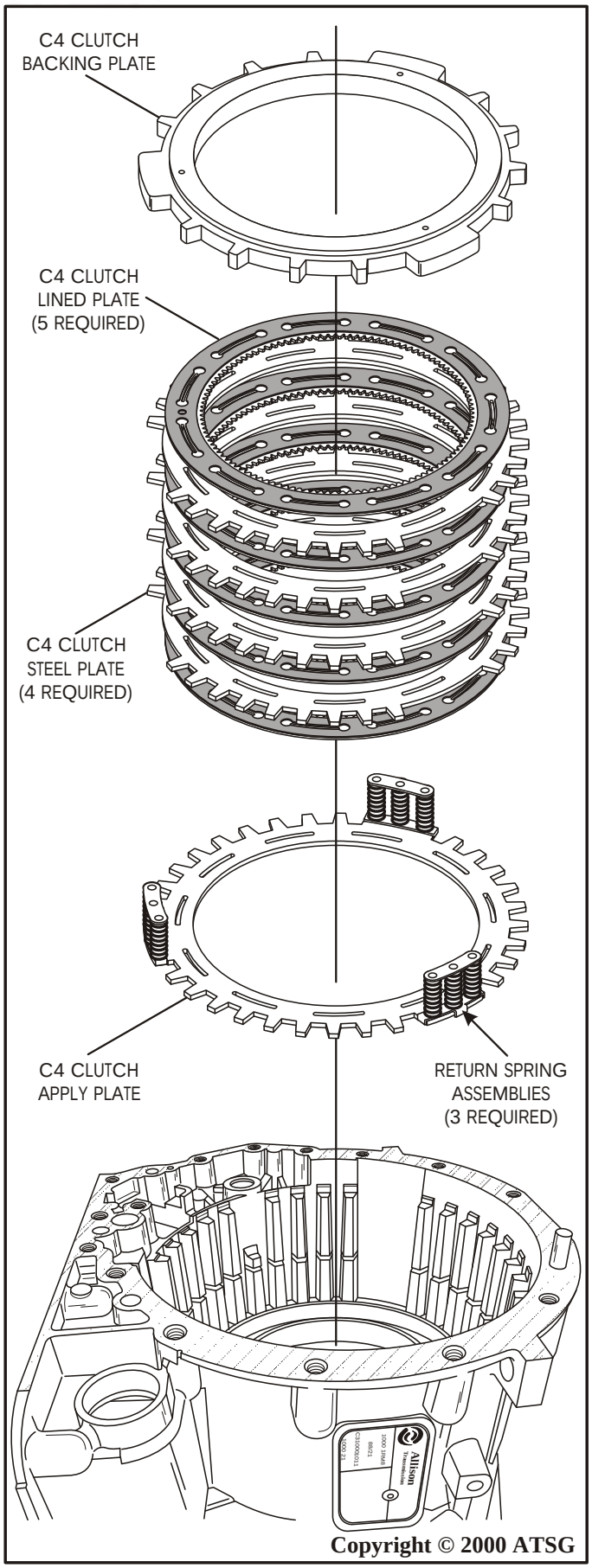

Figure 150

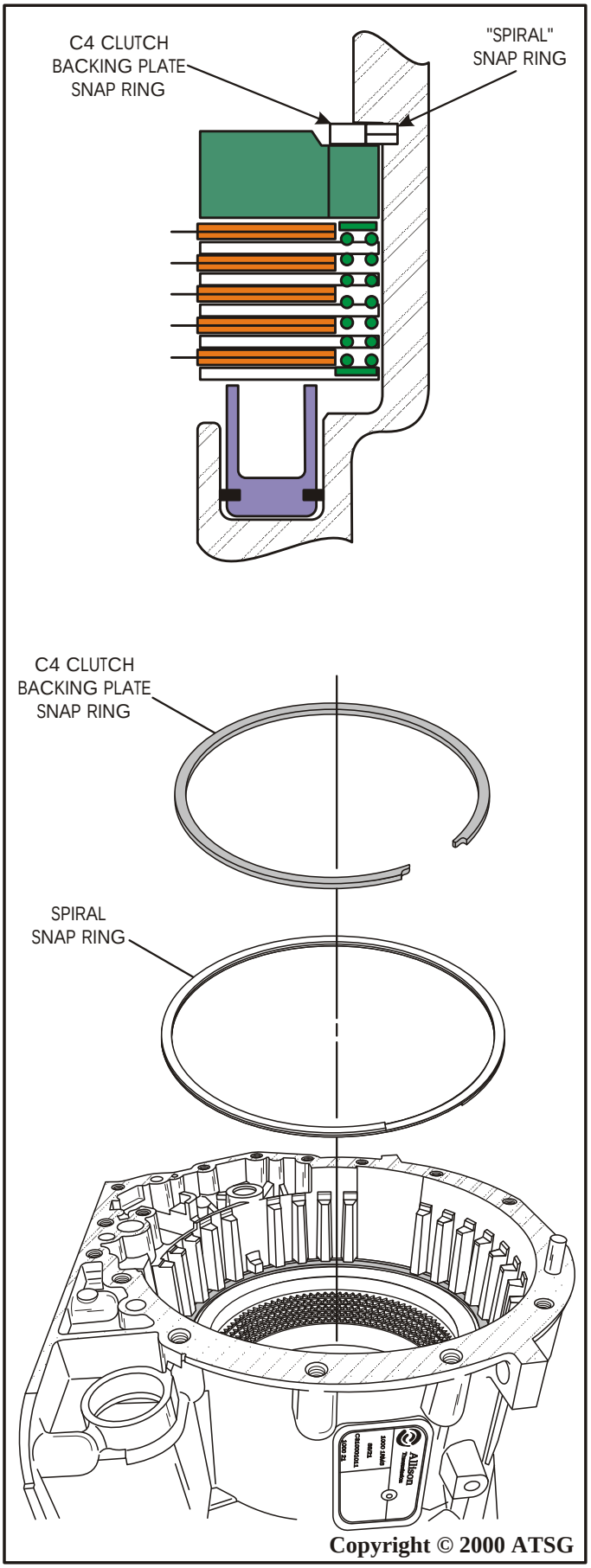

Figure 151

CONTINUED FROM PAGE 102

10. Check the C4 clutch clearance using the feeler gage, through the rear opening in transmission case, as shown in Figure 152.
11. Correct clutch clearance should be .040"-.060", as shown in Figure 152.
    Note: There are no selectives. If clearance is not correct, there is a mis-assembly. Correct as necessary.
12. Install the parking rod actuator guide into the case, as shown in Figure 153, ensuring that the rollers on the parking actuator rod are engaged inside the guide.
13. Install the pre-assembled P1 planetary carrier assembly, with the thrust washer in place, into the P1 ring gear by rotating back and forth, to ensure that the ring gear teeth engage with all C4 lined plates (See Figure 153).
14. Ensure that the thrust washer on the P2 ring gear is fully seated against the P1 ring gear.
15. Install the P1 Planetary Carrier to P2 Planetary Carrier thrust bearing onto the P1 carrier in the direction shown in Figure 153.
16. Install the C5 clutch backing plate in the case in direction shown in Figure 154.
17. Install C5 clutch pack beginning with a lined plate and alternating with steel plates until you have installed six of each (See Figure 154).
    Note: The C5 steel plates are "selective" and there are 4 different thickness plates available.
18. Next we must check the C5 clutch clearance and this ***requires*** an "H" gage.

Continued on Page 106

CHECKING C4 CLUTCH CLEARANCE

Correct Clearance Should Be .040" .060"

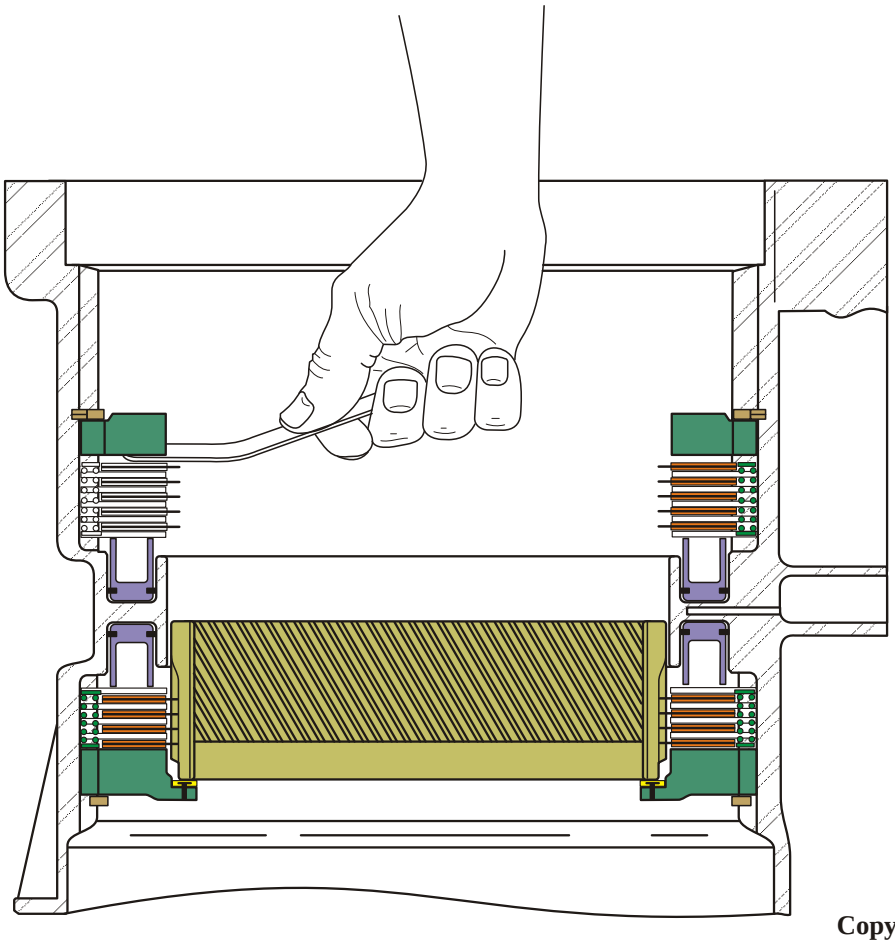

Copyright © 2000 ATSG

Figure 152

https://truckmanualshub.com/

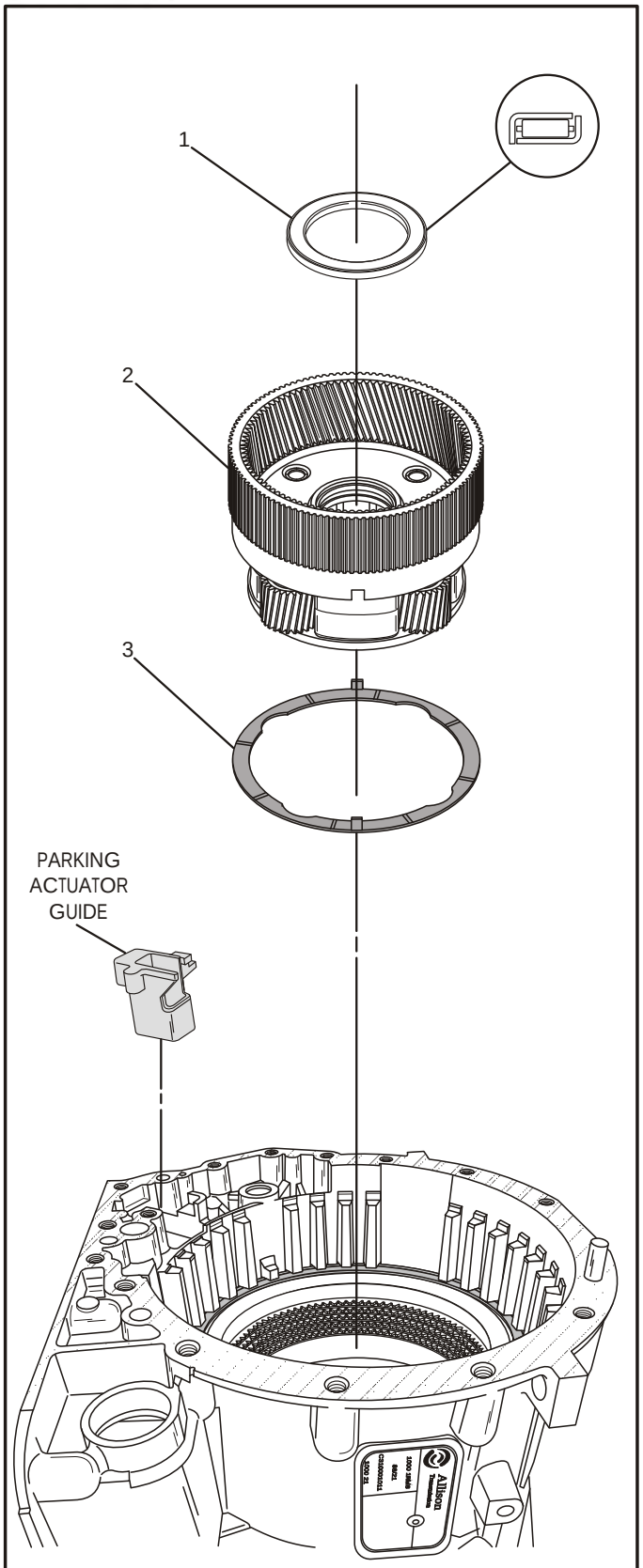

1. P1 PLANET CARRIER/P2 PLANET CARRIER THRUST BEARING
2. P1 PLANETARY CARRIER ASSEMBLY
3. P1 RING GEAR/P2 RING GEAR "PEEK" THRUST WASHER

Copyright © 2000 ATSG

Figure 153

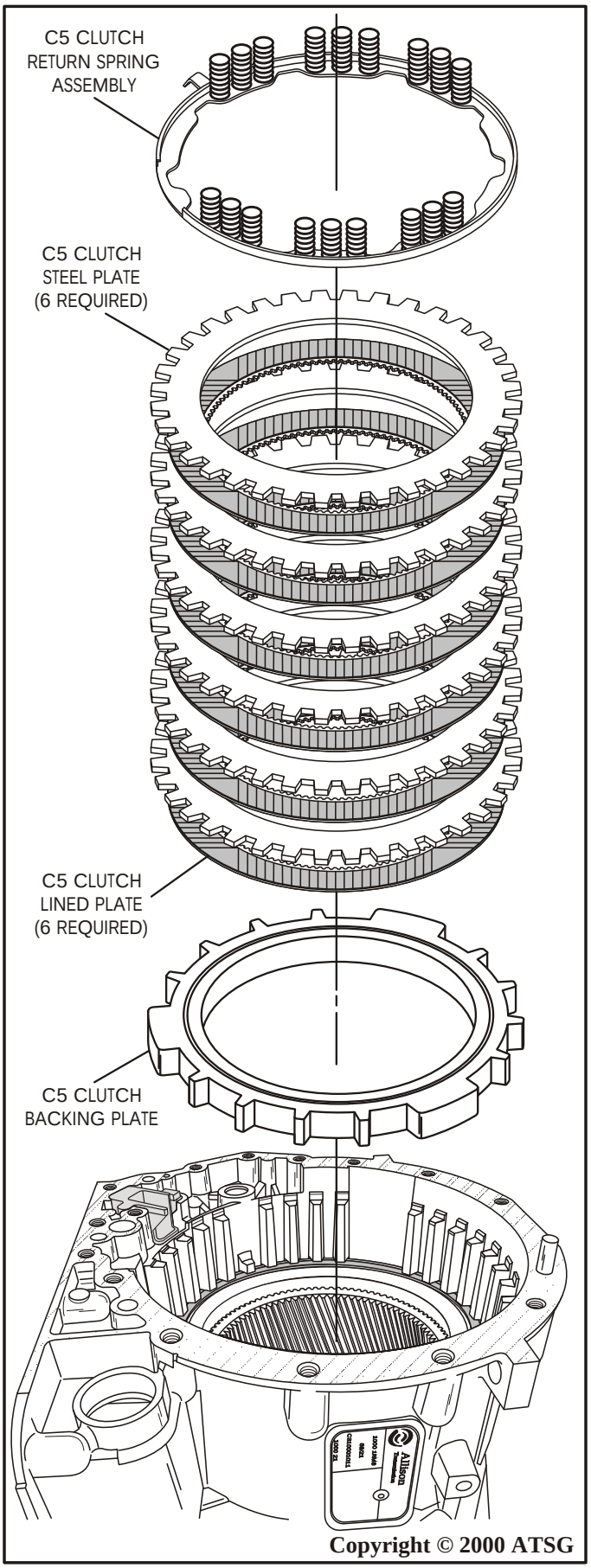

Copyright © 2000 ATSG

Figure 154

CONTINUED FROM PAGE 104

19. Place the pre-assembled extension housing on flat work surface with the piston facing up, as shown in Figure 155.
20. Place the extension housing to case gasket on the extension housing as shown in Figure 155.
    Note: This step is important as the gasket thickness must be included in the equation for C5 clutch clearance (See Figure 155).
21. Place the "H" gage on the transmission case, as shown in Figure 155.
22. Loosen the set screw knob and allow the pin to go down so that it is resting on the top steel plate, as shown in Figure 155, and re-tighten set screw knob with pin in this position.
    Note: Sliding pin must be resting flush on steel plate for accurate measurement.
23. With the set screw knob tight carefully turn the "H" gage over and set it on extension housing gasket, with the sliding pin over one portion of C5 piston, as shown in Figure 155.
24. With a feeler gage check and record clearance between the sliding pin and the C5 piston, as shown in Figure 155.
25. Correct C5 clutch clearance is .090" - .110", as shown in Figure 155.
    Note: Change selective steel plate to obtain correct C5 clutch clearance, as below.
    C5 steel 29536481 = .076" to .081" thick.
    C5 steel 29536482 = .096" to .101" thick.
    C5 steel 29536483 = .115" to .120" thick.

CHECKING C5 CLUTCH CLEARANCE

Correct Clearance Should Be .090" .110"

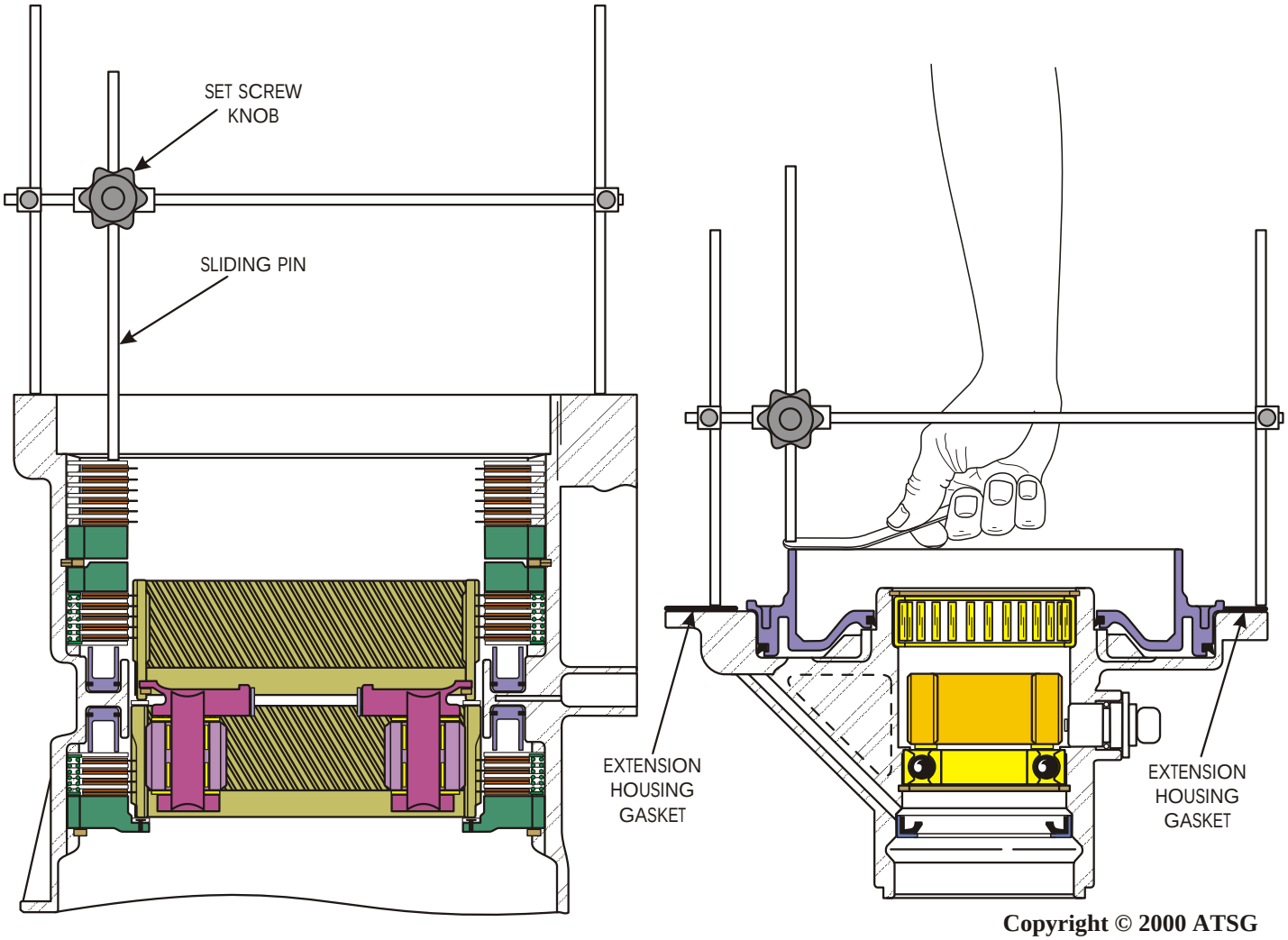

Copyright © 2000 ATSG

Figure 155

26. After C5 clutch clearance has been verified, install the C5 clutch return spring assembly on top of the last steel plate with the springs facing up, as shown in Figure 156.
    Note: Ensure that the locating tab is in the proper position.
27. Install the pre-assembled P2 planetary carrier assembly by rotating back and forth, into the P2 ring gear and ensure that ring gear teeth engage with all C5 lined plates, and is fully seated against bearing (See Figure 157).
28. Install P2 Planetary Carrier to P2 Sun Gear Thrust Bearing into the P2 carrier, in direction shown in Figure 157.

Continued on Page 108

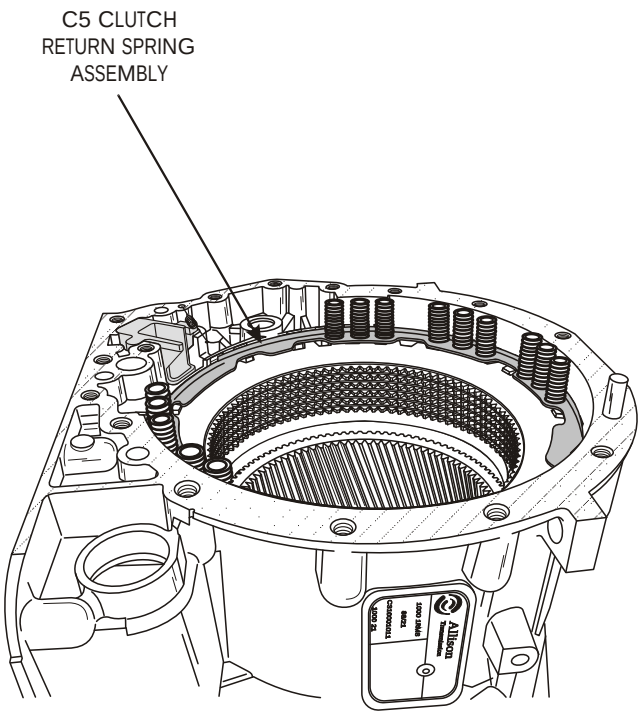

Copyright © 2000 ATSG

Figure 156

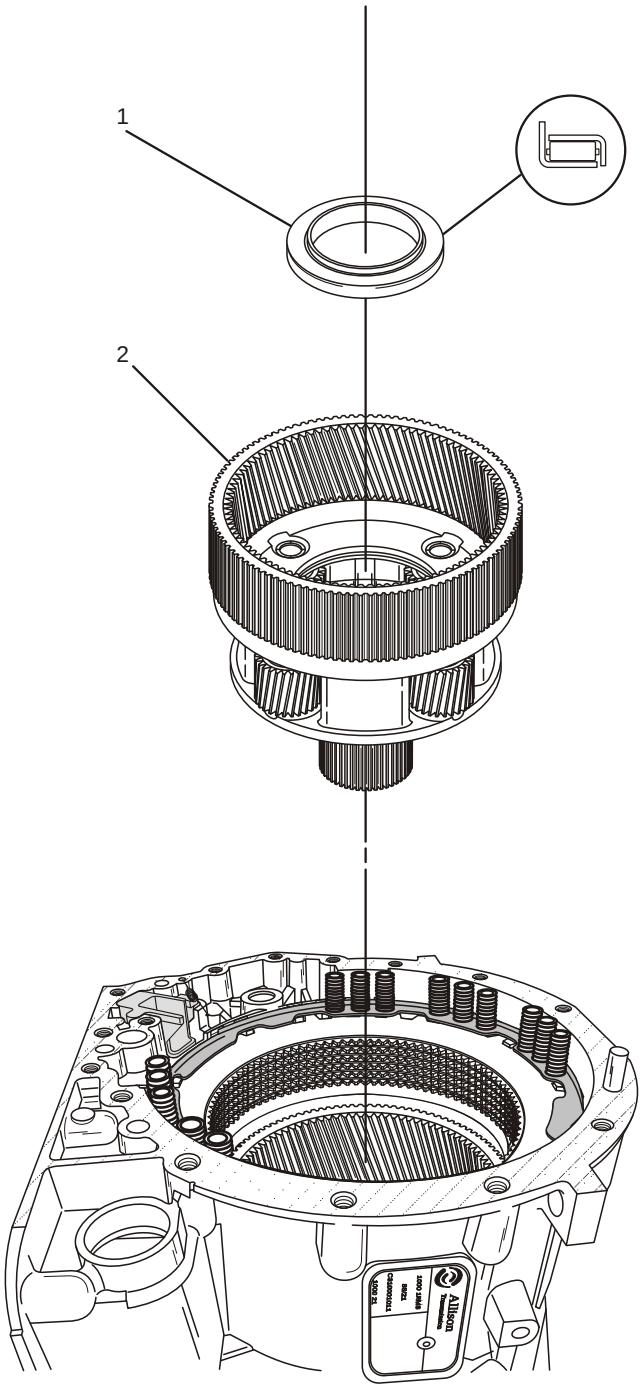

1. P2 PLANETARY CARRIER/P2 SUN GEAR THRUST BEARING
2. P2 PLANETARY CARRIER ASSEMBLY

Copyright © 2000 ATSG

Figure 157

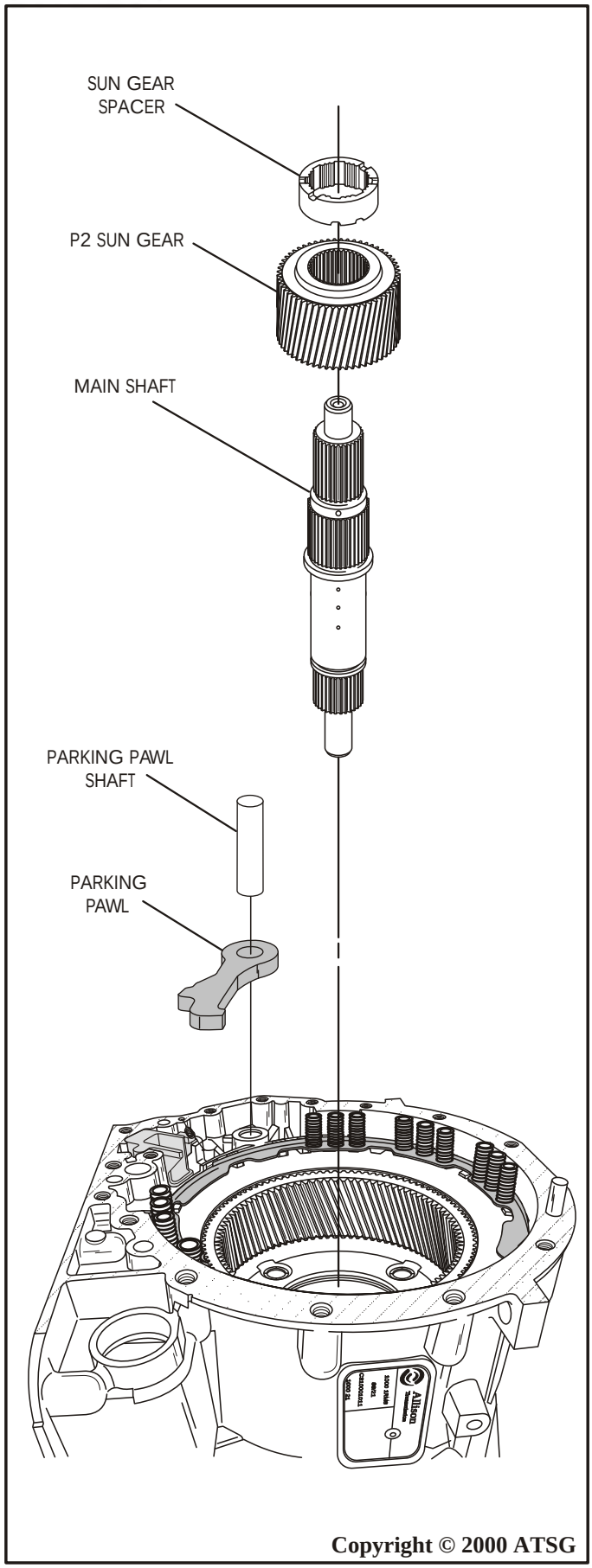

Figure 158

CONTINUED FROM PAGE 107

29. Install the parking pawl return spring into the hole in the case, and connect the other end of the spring to the parking pawl with a slight twisting motion (See Figure 159).
30. Align the pin hole in the parking pawl with the parking pawl pin bore in the case, and install parking pawl pivot pin through the park pawl and into case bore (See Figures 158 and 159). ***Note: You will have to turn the park pawl pivot pin several times to get it fully seated. This will help in the installation as it is air locked during installation.***
31. Install the P2 sun gear and sun gear spacer on the main shaft splines, and install the assembly into carrier, as shown in Figure 158.
32. Install the P3 sun gear and thrust bearing onto main shaft in direction shown in Figure 160.
33. Install output shaft through carrier, as shown in Figure 160, and install assembly into case. ***Note: Ensure that P3 planetary carrier and output shaft are fully seated, as shown in Figure 161.***
34. Install new extension housing to case gasket on case, as shown in Figure 161.
35. Install the pre-assembled extension housing assembly onto the case (See Figure 161).
36. Install 16 extension housing bolts and torque to 50 N.m (37 ft.lb.) (See Figure 161).

Continued on Page 110

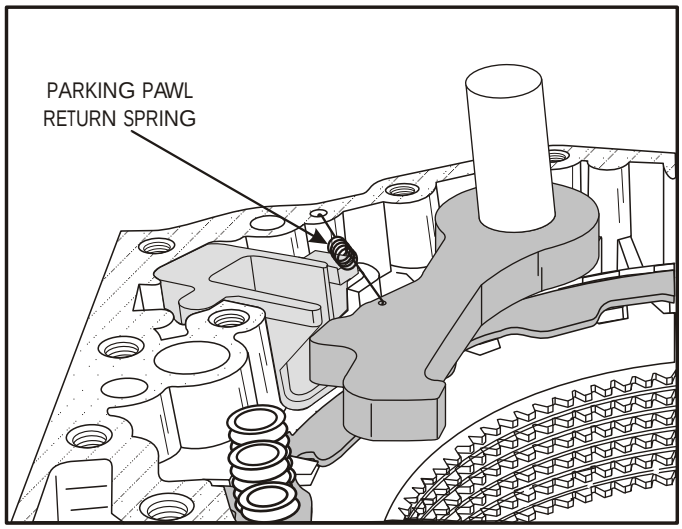

Figure 159

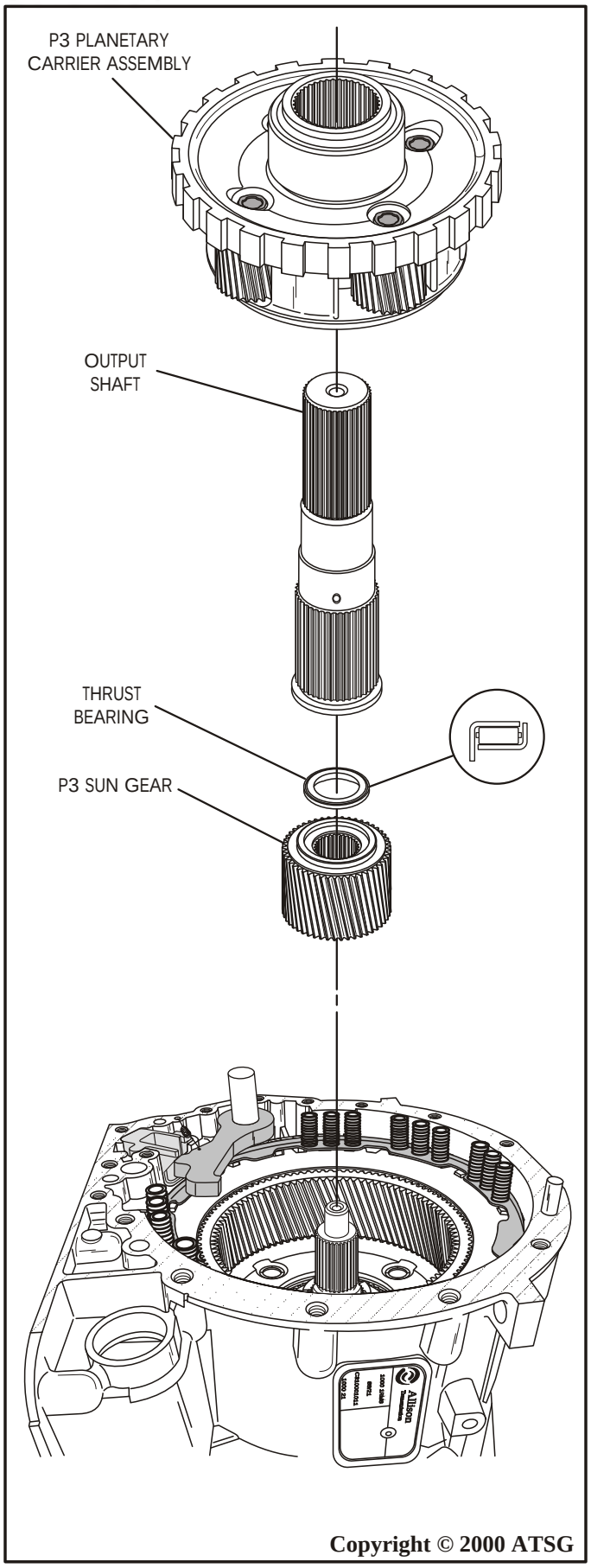

Figure 160

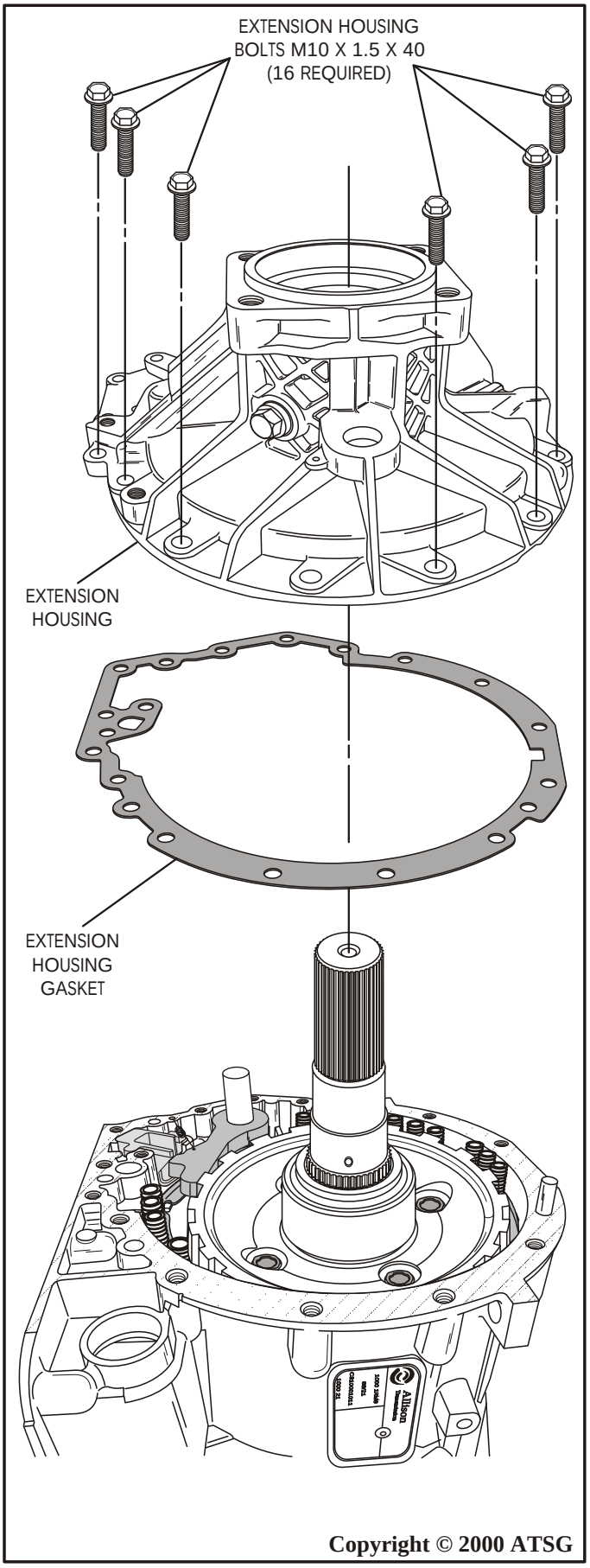

Figure 161

CONTINUED FROM PAGE 108

37. Rotate transmission in fixture so that the front of case is facing up, as shown in Figure 162.
38. Rotate the main shaft back and forth until it is fully seated in the splines of sun gear spacer. Refer to the dimensions in Figure 162 to ensure that the main shaft is fully seated.
    Note: It is sometimes necessary to lift straight up on the P2 planetary carrier shaft to reseat the main shaft (See Figure 162).
39. Ensure that the P1 sun gear to P1 planetary carrier thrust bearing is either in the P1 carrier or on the sun gear as shown in Figure 163.
40. Install the pre-assembled C1/C2 clutch housing into the transmission by rotating back and forth until fully seated, as shown in Figure 163.
41. Install a new bell housing to case gasket onto the case, as shown in Figure 164.
    Note: It is recommended that dowels, made from extra bolts if necessary, be used to align gasket and bell housing.
42. Install the pre-assembled bellhousing and pump assembly over dowel pins and onto the case, as shown in Figure 164.

Continued on Page 112

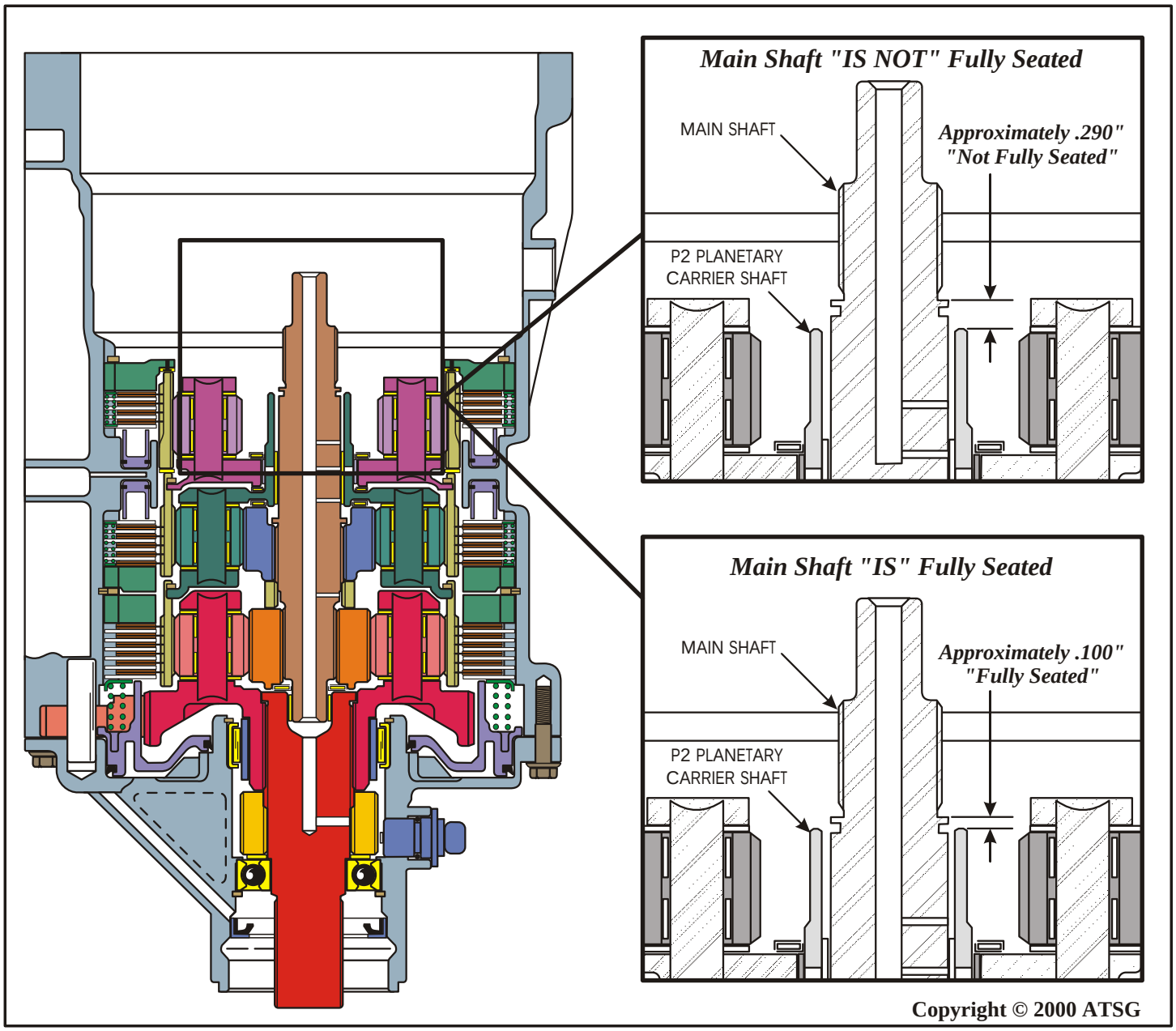

Copyright © 2000 ATSG

Figure 162

https://truckmanualshub.com/

INSTALLING C1/C2 CLUTCH HOUSING

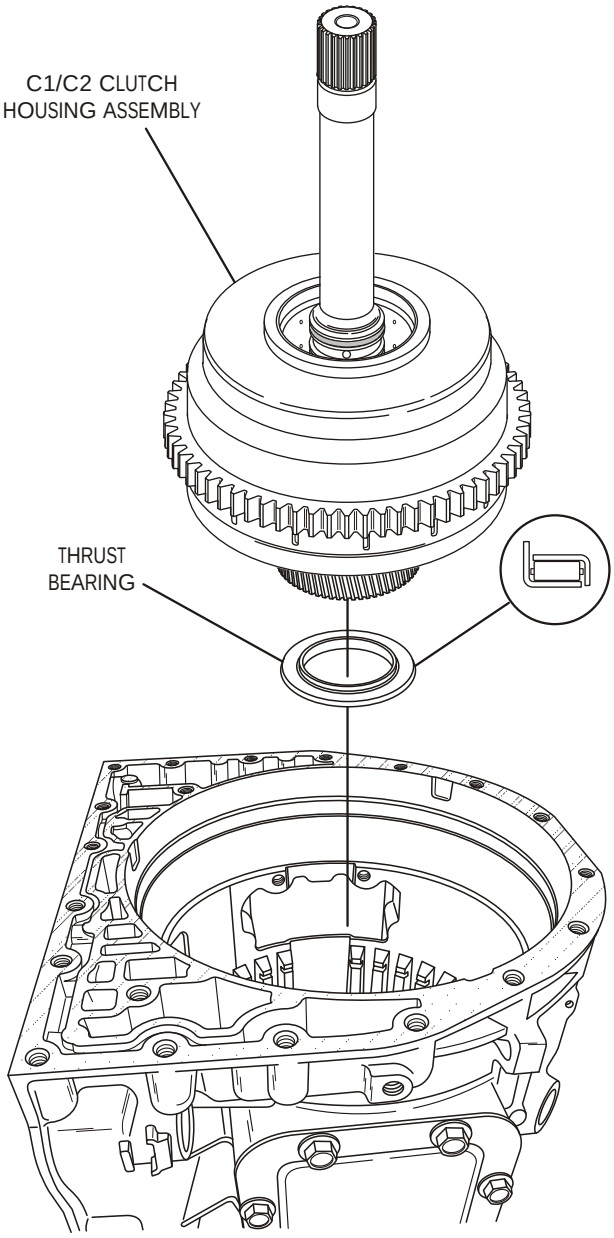

Copyright © 2000 ATSG

Figure 163

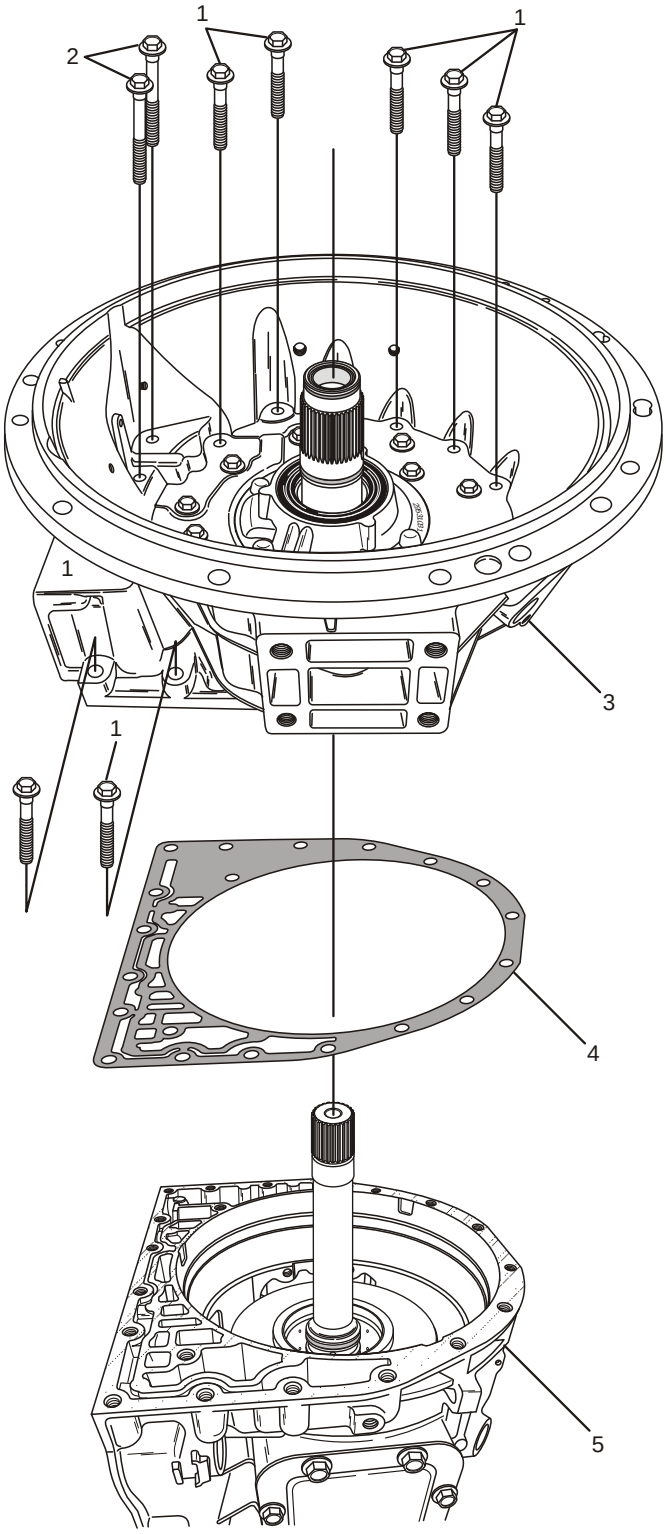

1. BELL HOUSING TO CASE BOLTS, M10 X 1.5 X 50,
   (11 INSIDE BELL, 2 EACH SIDE ON OUTSIDE, TOTAL 15 REQ.)
2. BELL HOUSING TO CASE BOLTS, M10 X 1.5 X 70, (5 REQUIRED)
3. BELL HOUSING AND PUMP ASSEMBLY
4. BELL HOUSING SPACER PLATE TO CASE GASKET
5. MAIN TRANSMISSION CASE ASSEMBLY

Copyright © 2000 ATSG

Figure 164

https://truckmanualshub.com/

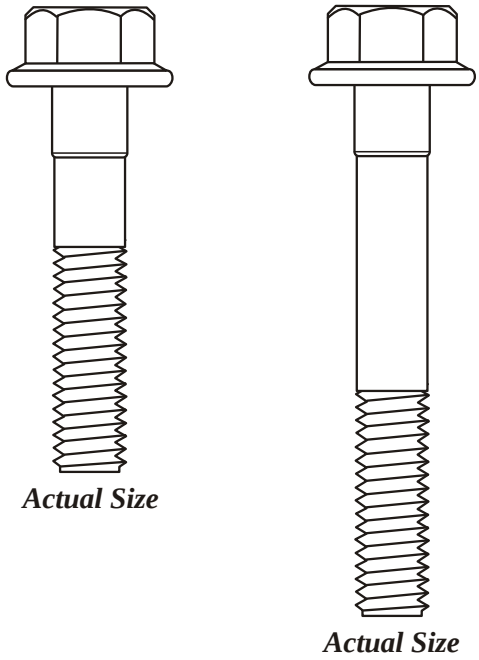

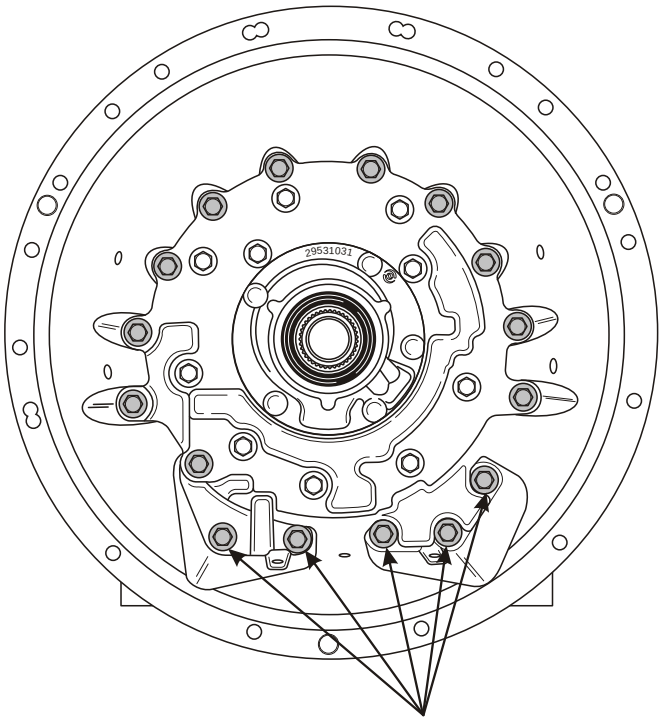

Copyright © 2000 ATSG

Figure 165

CONTINUED FROM PAGE 110

43. Install 11 of the 50mm length bolts in locations shown in Figure 165, and five 70mm length bolts in locations shown in Figure 165.
    Note: Hand tighten only at this time.
44. Install total of four 50mm bolts, 2 on each side, in the locations shown in Figure 166.
45. Torque all bell housing to case bolts that you have just installed, to 50 N.m (37 ft.lb.).
    Note: Torque using "criss-cross" pattern.
46. Check the turbine shaft end-play using a dial indicator set up as shown in Figure 167.
    Note: Front end-play should be .030"-.045".
47. Rotate transmission so that the output shaft is facing up (See Figure 167).
48. Check the output shaft end-play using a dial indicator set up as shown in Figure 167.
    Note: Rear end-play should be .018"-.032".
49. Now you can install the appropriate hardware on the rear of trans as shown in Figure 168.
    Note: All of these parts are model sensitive.
50. Rotate transmission in fixture so that pan side is facing up.

Continued on Page 114

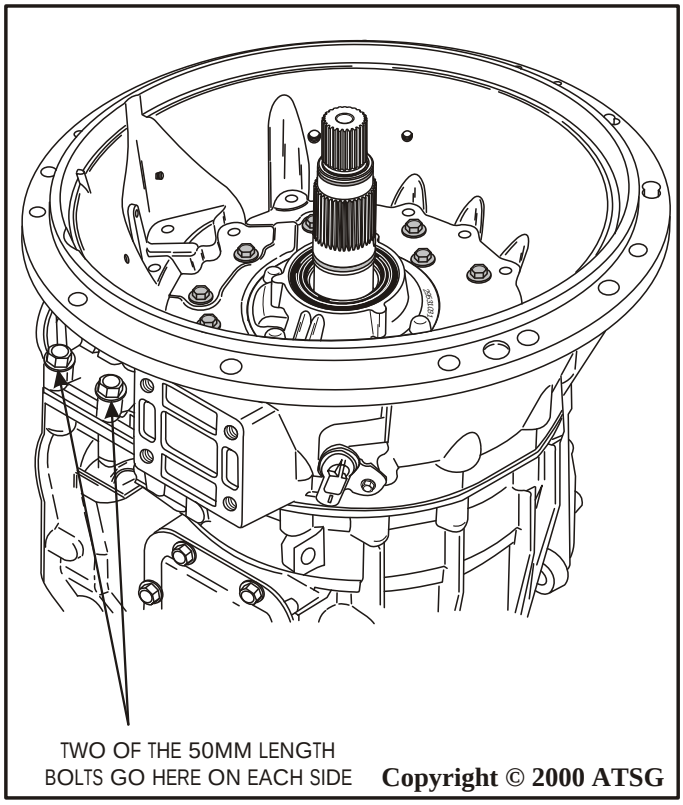

Copyright © 2000 ATSG

Figure 166

https://truckmanualshub.com/

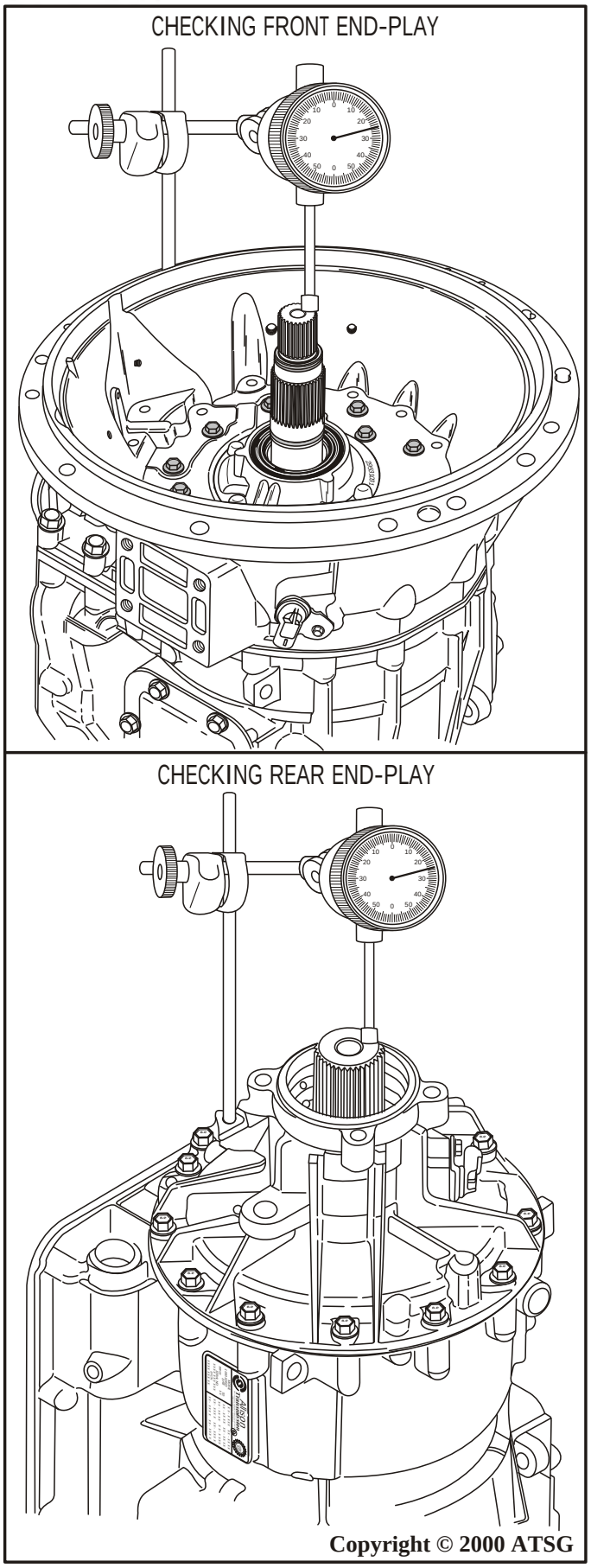

Figure 167

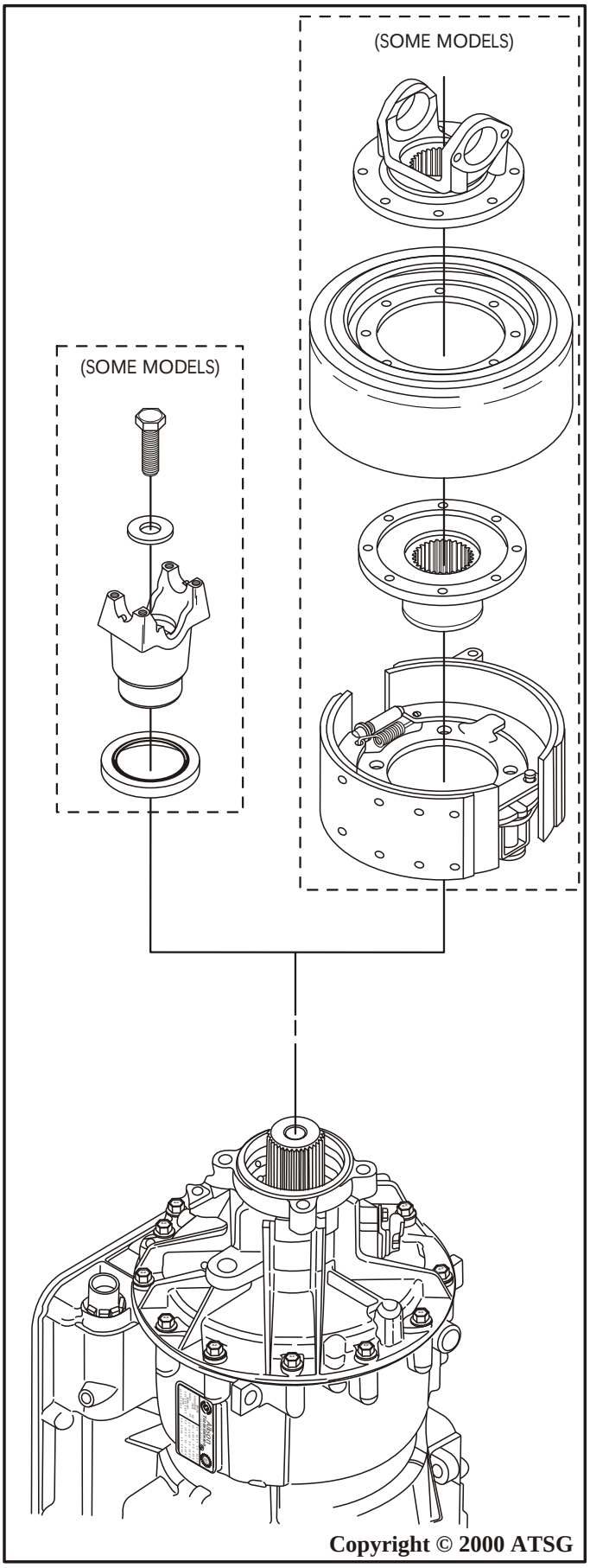

Figure 168

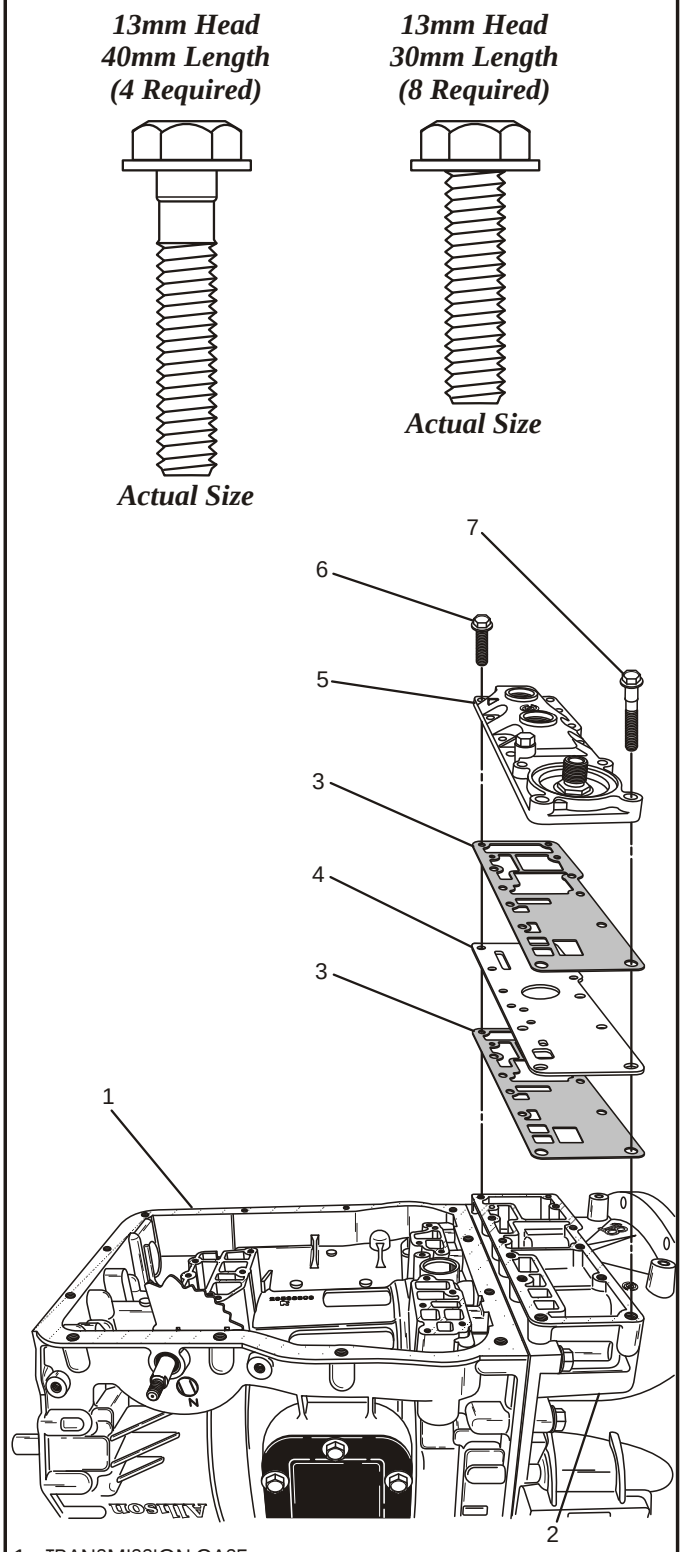

1. TRANSMISSION CASE.
2. TRANSMISSION BELL HOUSING.
3. COOLER MANIFOLD SPACER PLATE GASKET (2 REQUIRED).
4. COOLER MANIFOLD SPACER PLATE.
5. COOLER MANIFOLD ASSEMBLY.
6. COOLER MANIFOLD RETAINING BOLT, M8 x 1.25 x 30 (8 REQ).
7. COOLER MANIFOLD RETAINING BOLT, M8 x 1.25 x 40 (4 REQ).

Copyright © 2000 ATSG

Figure 169

CONTINUED FROM PAGE 112

51. Install cooler manifold assembly onto the bell housing, if used, using 2 new cooler manifold gaskets with spacer plate (See Figure 169).
52. Install the four long bolts in holes around the external filter, as shown in Figure 169, and the the eight short bolts in the remaining holes.
53. Torque all cooler manifold bolts to 30 N.m, (22 ft.lb.).
54. Install a new external transmission filter onto cooler manifold, as shown in Figure 170.
    Note: Tighten by hand only.
55. Install the pre-assembled valve body assembly onto the case, as shown in Figure 171.
    Note: Ensure that during assembly manual valve pin is engaged into the inside detent lever slot, and case connector is fully seated in connector case bore.
56. Install 15 valve body assembly to case bolts in the locations shown in Figure 172.
57. Torque the valve body to case retaining bolts to 12 N.m, (9 ft.lb.).

Continued on Page 116

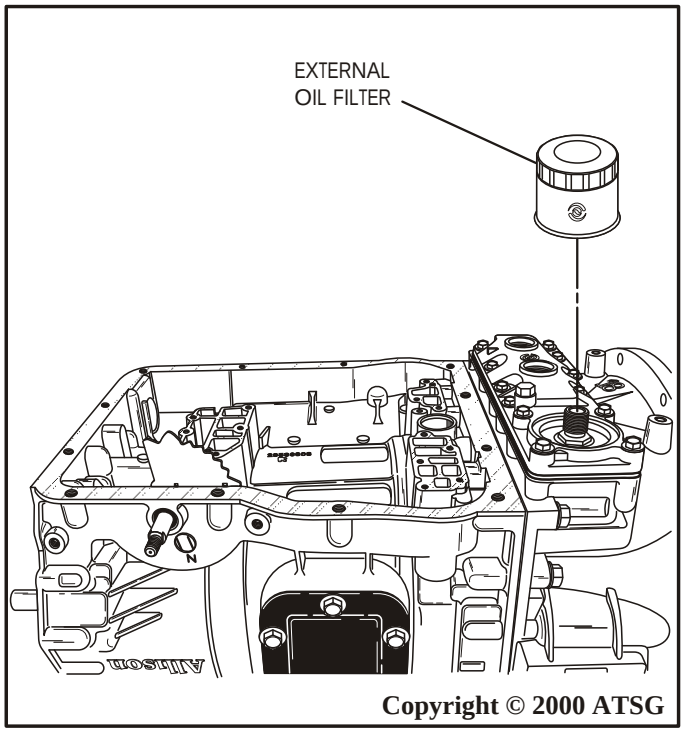

Copyright © 2000 ATSG

Figure 170

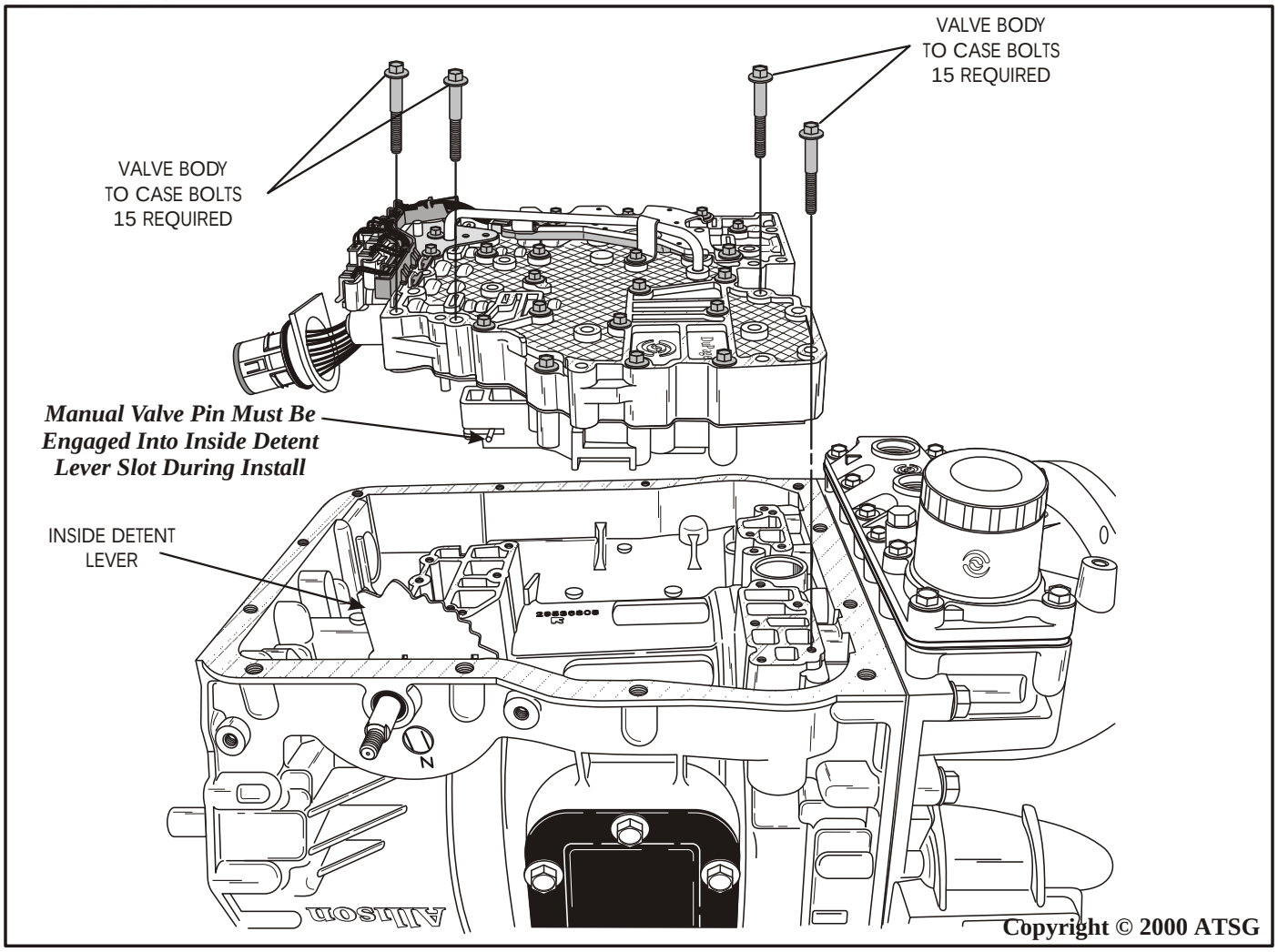

Figure 171

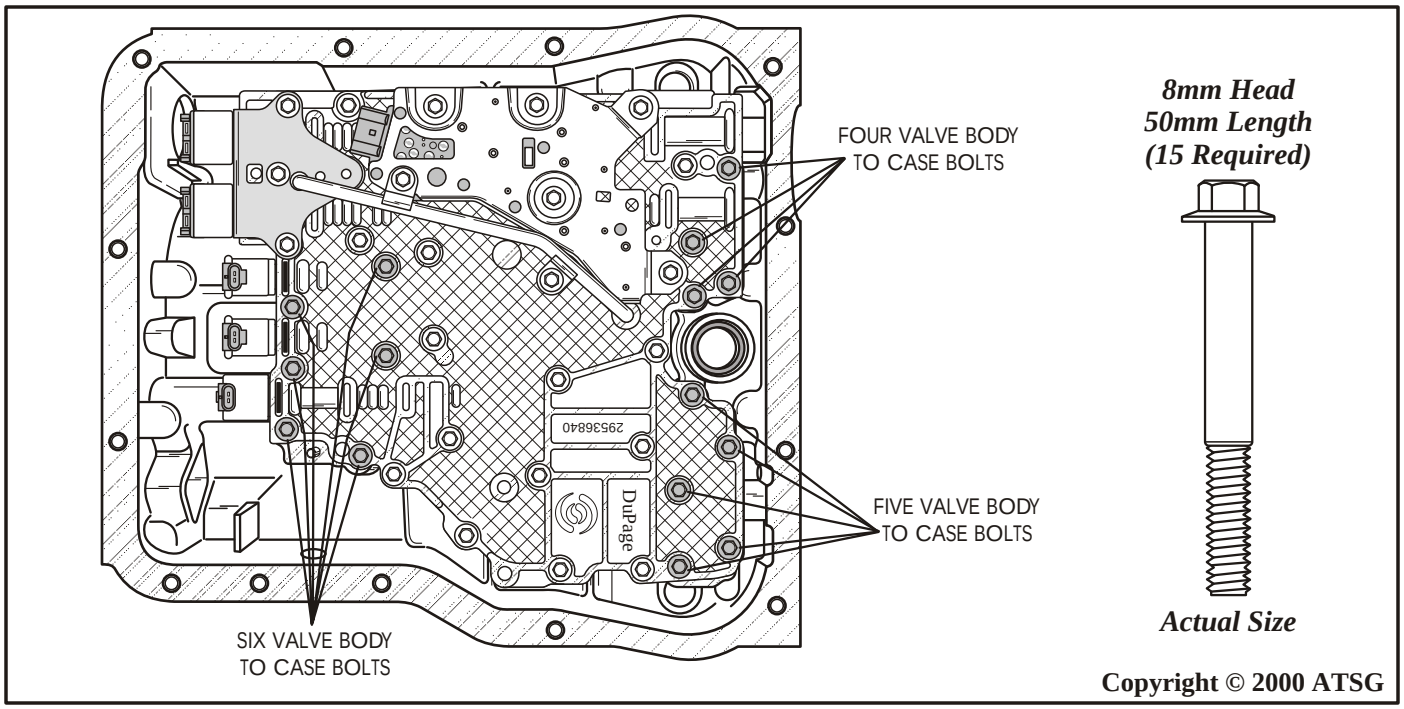

Figure 172

https://truckmanualshub.com/

CONTINUED FROM PAGE 114

58. Install the inside detent roller and spring onto the valve body, as shown in Figure 173.
59. Install the two detent roller and spring retaining bolts and torque to 12 N.m, (9 ft.lb.). (See Figure 173).
60. Install a new bottom pan filter and filter seal in transmission, as shown in Figure 174. ***Note: Lubricate the filter seal with a small amount of TransJel® before installation.***
61. Install a new bottom pan gasket onto the case, as shown in Figure 175.
62. Install the bottom pan magnet into the bottom pan in the location shown in Figure 175. ***Note: Magnet location in the bottom pan is very important to perform properly.***
63. Install the bottom pan and twelve bottom pan retaining bolts, as shown in Figure 175.
64. Torque all of the bottom pan retaining bolts to 27 N.m, (20 ft.lb.) (See Figure 175).
65. Install new "O" rings on all three speed sensors and lubricate "O" rings with a small amount of TransJel® (See Figure 176).
66. Install all three speed sensors in their proper locations, as shown in Figure 176, and torque the retaining bolts to 12 N.m, (9 ft.lb.).
67. Install the Neutral Safety Back Up switch, as shown in Figure 176, and torque the retaining bolts to 27 N.m, (20 ft.lb.
68. Lubricate the torque converter hub with a small amount of TransJel®, and install the converter into transmission, ensuring that it is fully seated into the pump gear (See Figure 177).

THIS CONCLUDES THE
FINAL ASSEMBLY PROCESS

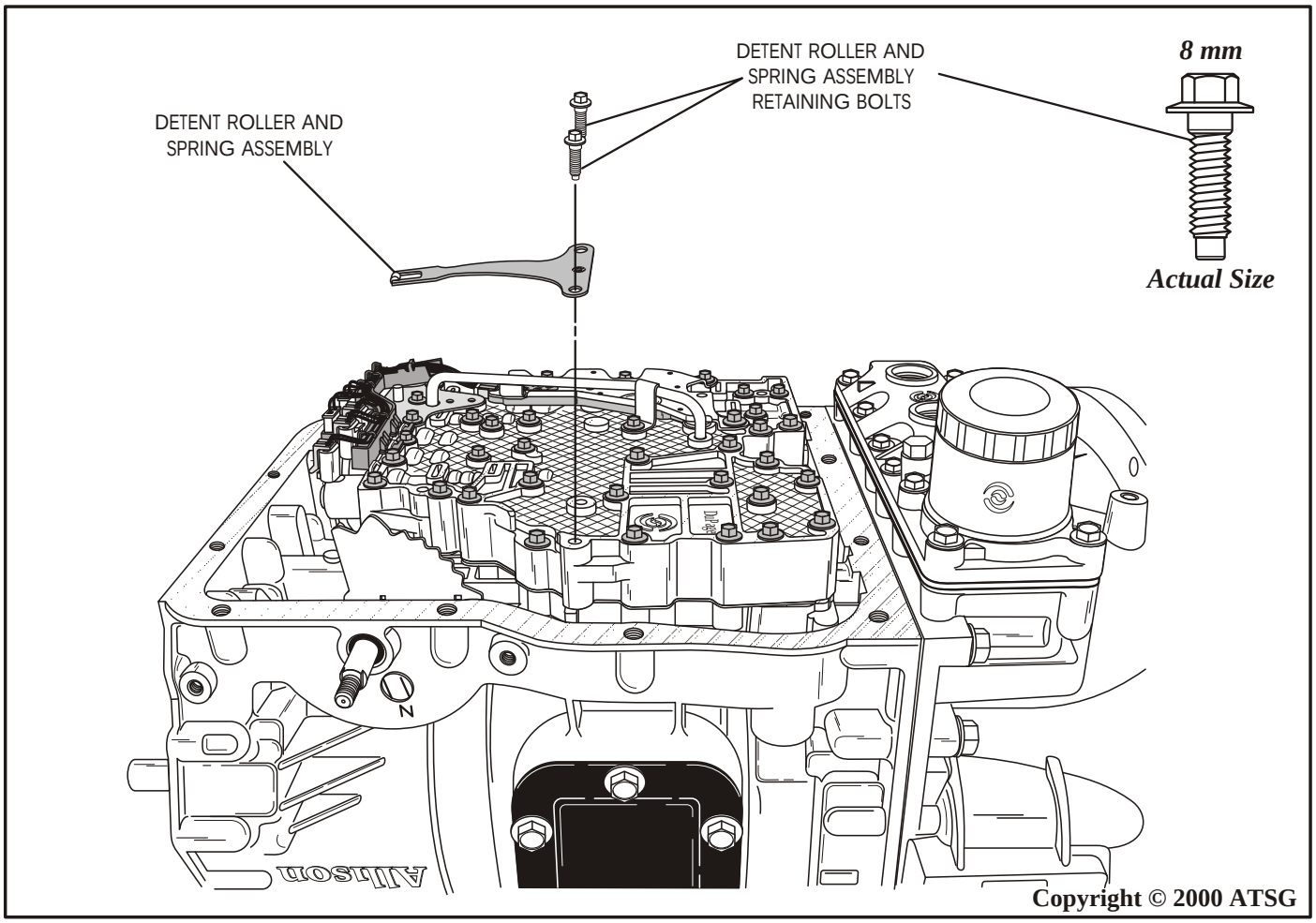

Figure 173

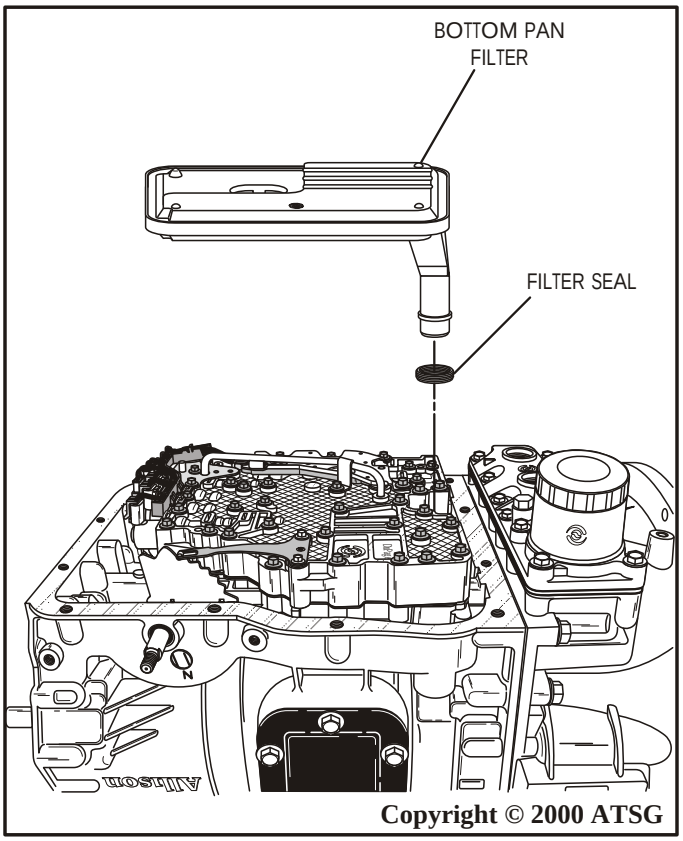

Figure 174

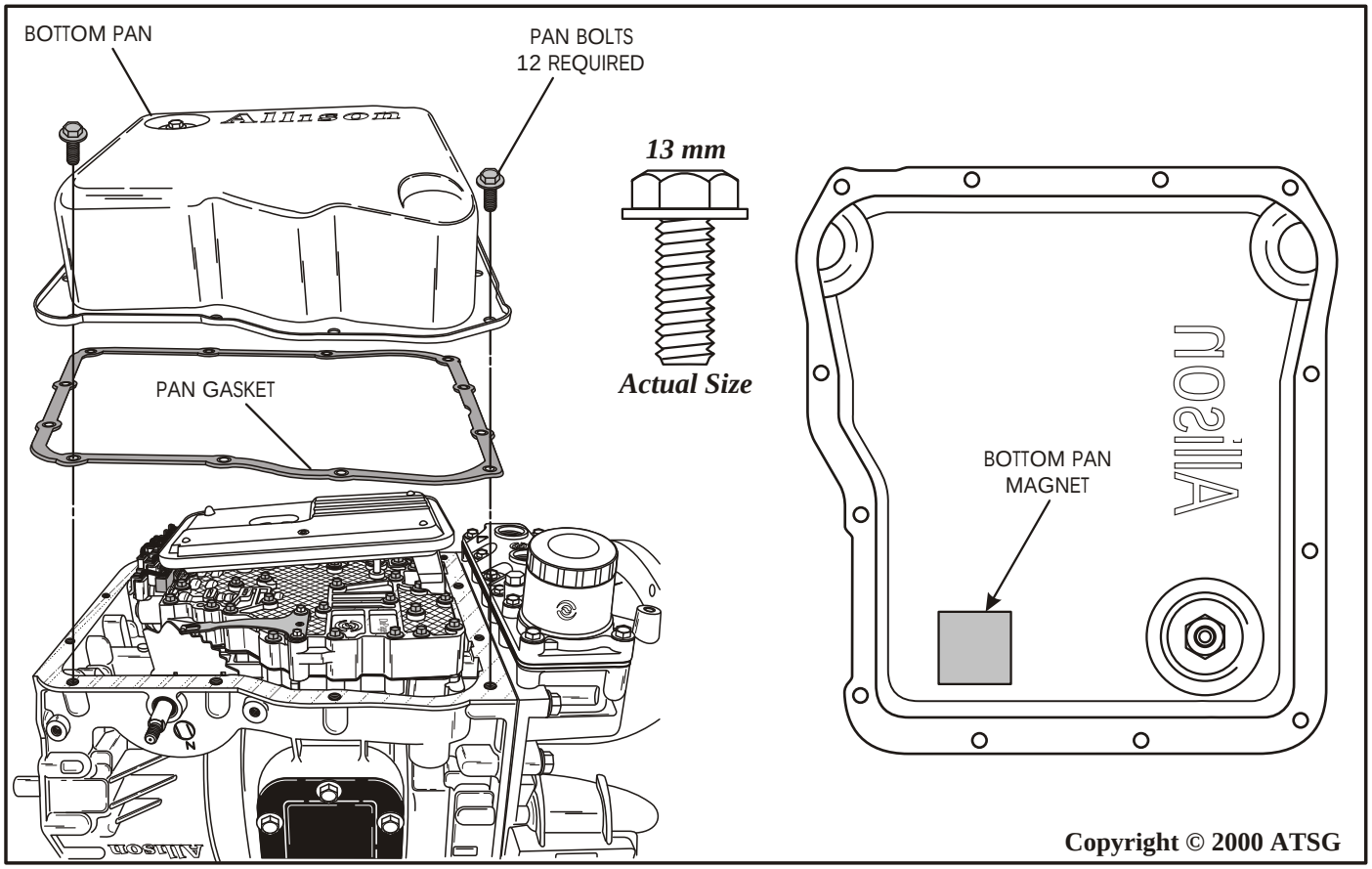

Figure 175

https://truckmanualshub.com/

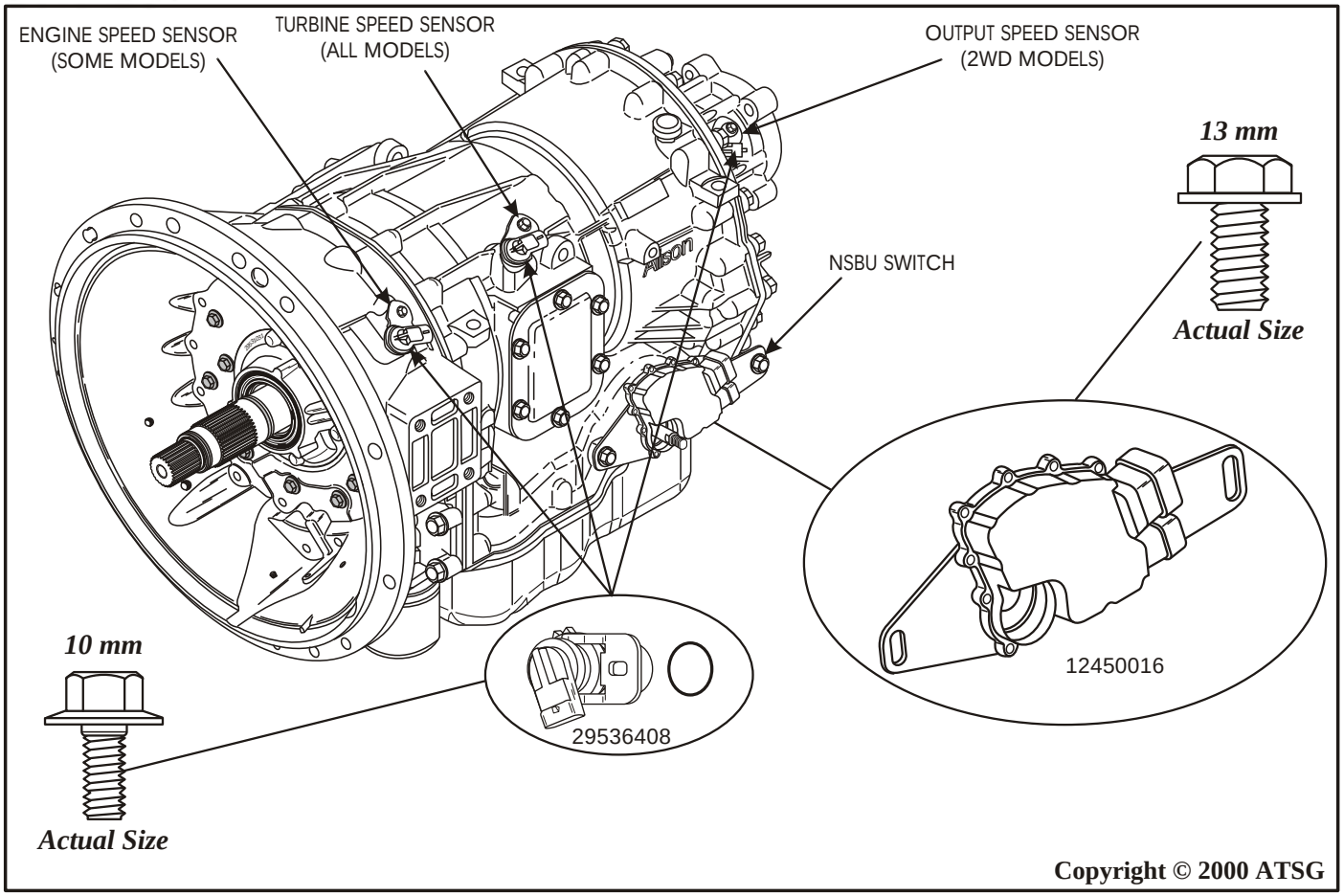

Figure 176

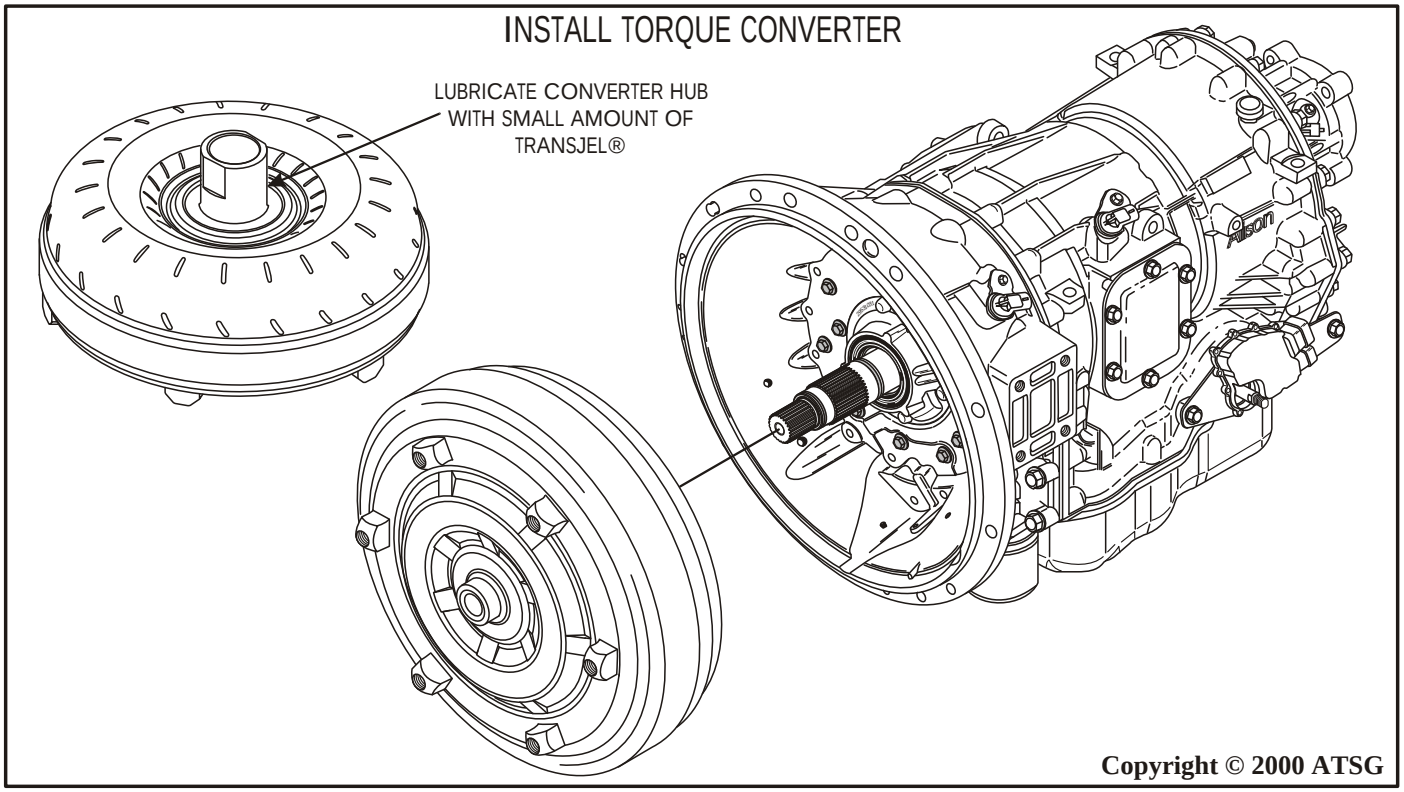

Figure 177

BOLT IDENTIFICATION CHART

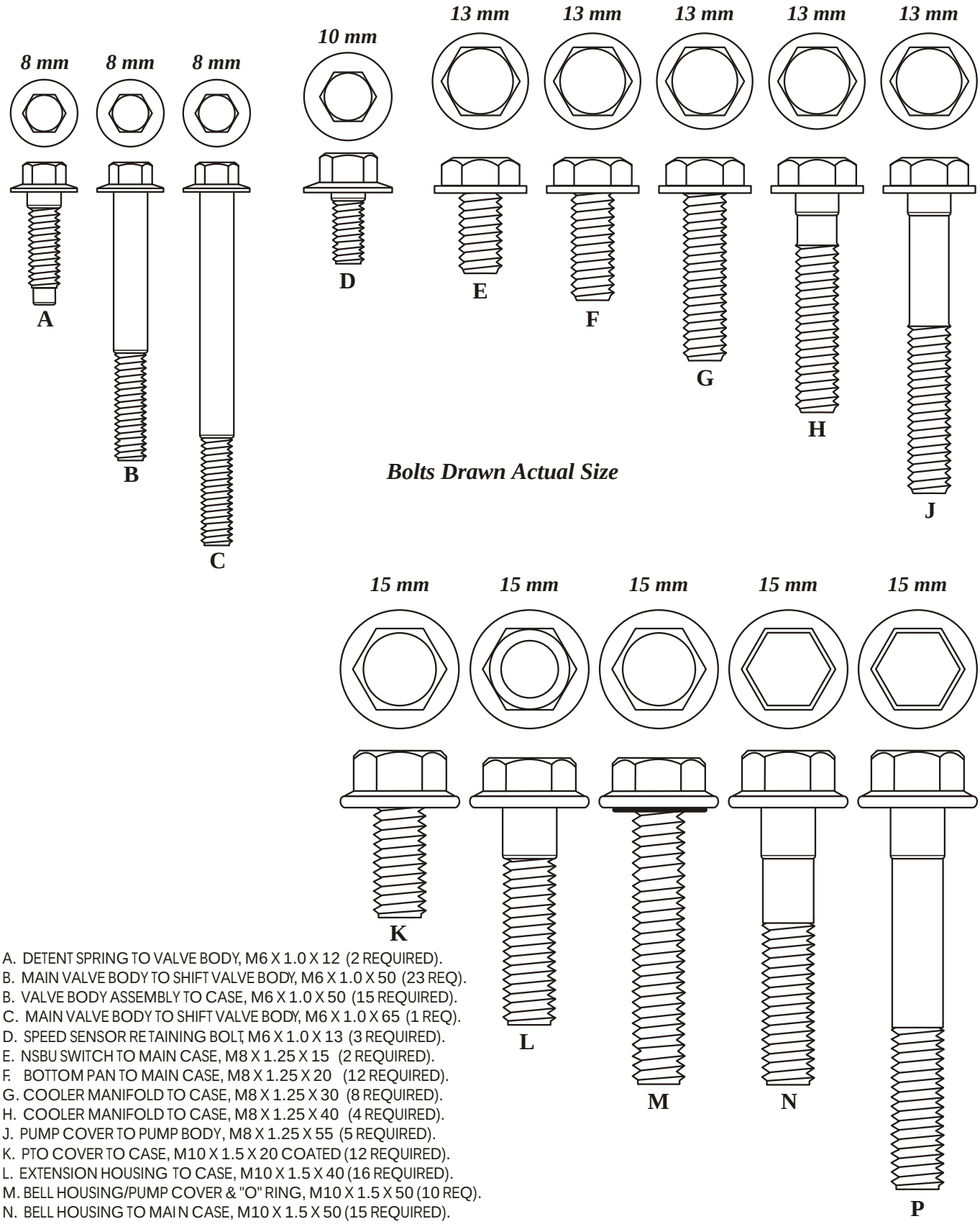

A. DETENT SPRING TO VALVE BODY, M6 X 1.0 X 12 (2 REQUIRED).
B. MAIN VALVE BODY TO SHIFT VALVE BODY, M6 X 1.0 X 50 (23 REQ).
B. VALVE BODY ASSEMBLY TO CASE, M6 X 1.0 X 50 (15 REQUIRED).
C. MAIN VALVE BODY TO SHIFT VALVE BODY, M6 X 1.0 X 65 (1 REQ).
D. SPEED SENSOR RETAINING BOLT, M6 X 1.0 X 13 (3 REQUIRED).
E. NSBU SWITCH TO MAIN CASE, M8 X 1.25 X 15 (2 REQUIRED).
F. BOTTOM PAN TO MAIN CASE, M8 X 1.25 X 20 (12 REQUIRED).
G. COOLER MANIFOLD TO CASE, M8 X 1.25 X 30 (8 REQUIRED).
H. COOLER MANIFOLD TO CASE, M8 X 1.25 X 40 (4 REQUIRED).
J. PUMP COVER TO PUMP BODY, M8 X 1.25 X 55 (5 REQUIRED).
K. PTO COVER TO CASE, M10 X 1.5 X 20 COATED (12 REQUIRED).
L. EXTENSION HOUSING TO CASE, M10 X 1.5 X 40 (16 REQUIRED).
M. BELL HOUSING/PUMP COVER & "O" RING, M10 X 1.5 X 50 (10 REQ).
N. BELL HOUSING TO MAIN CASE, M10 X 1.5 X 50 (15 REQUIRED).
P. BELL HOUSING TO MAIN CASE, M10 X 1.5 X 70 (5 REQUIRED).

Copyright © 2000 ATSG

Figure 178

https://truckmanualshub.com/

TORQUE SPECIFICATION CHART

DETENT SPRING TO VALVE BODY, M6 X 1.0 X 12 (2 REQUIRED)	12 N.m, (9 ft.lb.).
MAIN VALVE BODY TO SHIFT VALVE BODY, M6 X 1.0 X 50 (23 REQUIRED)	12 N.m, (9 ft.lb.).
VALVE BODY ASSEMBLY TO CASE, M6 X 1.0 X 50 (15 REQUIRED)	12 N.m, (9 ft.lb.).
MAIN VALVE BODY TO SHIFT VALVE BODY, M6 X 1.0 X 65 (1 REQUIRED)	12 N.m, (9 ft.lb.).
SPEED SENSOR RETAINING BOLT, M6 X 1.0 X 13 (3 REQUIRED)	12 N.m, (9 ft.lb.).
NSBU SWITCH TO MAIN CASE, M8 X 1.25 X 15 (2 REQUIRED)	27 N.m, (20 ft.lb.).
BOTTOM PAN TO MAIN CASE, M8 X 1.25 X 20 (12 REQUIRED)	27 N.m, (20 ft.lb.).
BOTTOM PAN DRAIN PLUG	35 N.m, (26 ft.lb.).
MANUAL SHAFT NUT (INTERNAL & EXTERNAL)	23 N.m, (17 ft.lb.).
COOLER MANIFOLD TO BELL HSG, M8 X 1.25 X 30 (8 REQUIRED)	30 N.m, (22 ft.lb.).
COOLER MANIFOLD TO BELL HSG, M8 X 1.25 X 40 (4 REQUIRED)	30 N.m, (22 ft.lb.).
PUMP COVER TO PUMP BODY, M8 X 1.25 X 55 (5 REQUIRED)	27 N.m, (20 ft.lb.).
PTO COVER TO MAIN CASE, M10 X 1.5 X 20 COATED (12 REQUIRED)	56 N.m, (41 ft.lb.).
EXTENSION HOUSING TO MAIN CASE, M10 X 1.5 X 40 (16 REQUIRED)	50 N.m, (37 ft.lb.).
BELL HOUSING TO PUMP COVER WITH "O" RING, M10 X 1.5 X 50 (10 REQUIRED)	43 N.m, (32 ft.lb.).
BELL HOUSING TO MAIN CASE, M10 X 1.5 X 50 (15 REQUIRED)	50 N.m, (37 ft.lb.).
BELL HOUSING TO MAIN CASE, M10 X 1.5 X 70 (5 REQUIRED)	50 N.m, (37 ft.lb.).
REAR YOKE NUT WHEN USED	123 N.m, (91 ft.lb.).
TRANSMISSION TO ENGINE	50 N.m, (37 ft.lb.).
TRANSFER CASE TO TRANSMISSION	50 N.m, (37 ft.lb.).
TRANSMISSION MOUNT TO ADAPTER HOUSING	47 N.m, (35 ft.lb.).
TRANSMISSION MOUNT NUTS	40 N.m, (30 ft.lb.).

Figure 179

Copyright © 2000 ATSG