bobcat

2000 RTF

SERVICE MANUAL

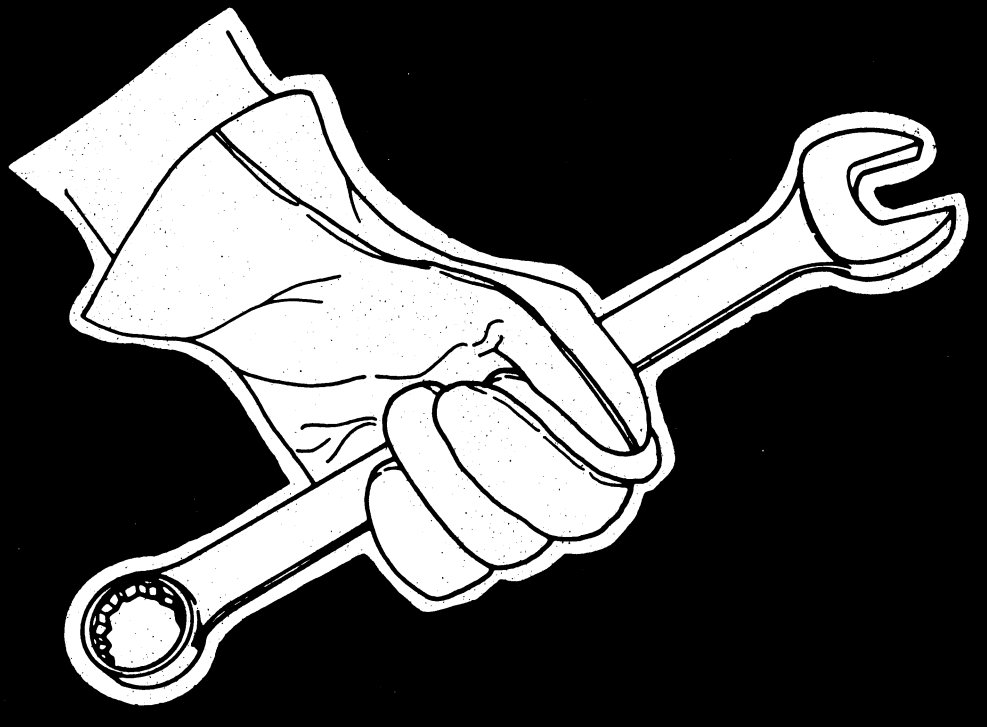

CLARK Melroe Division

6566662 (4-83)-5C

Printed in U.S.A.

MAINTENANCE SAFETY

WARNING

Instructions are necessary before operating or servicing machine. Read and understand the Operation & Maintenance Manual, Operator's Handbook and signs (decals) on machine. Follow warnings and instructions in the manuals when making repairs, adjustments or servicing. Check for correct function after adjustments, repairs or service. Untrained operators and failure to follow instructions can cause injury or death.

W-2003-0903

Safety Alert Symbol: This symbol with a warning statement, means: "Warning, be alert! Your safety is involved!" Carefully read the message that follows.

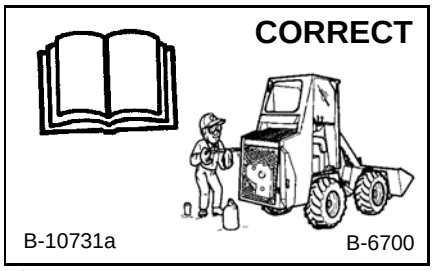

- **Never service the Bobcat Loader without instructions. See Service Manual.**
- **Check engine and hydraulic fluids daily.**
- **Use recommended fluids.**

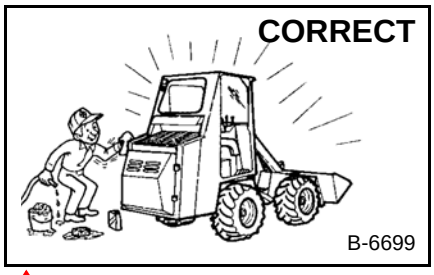

- **Cleaning and maintenance are required daily.**

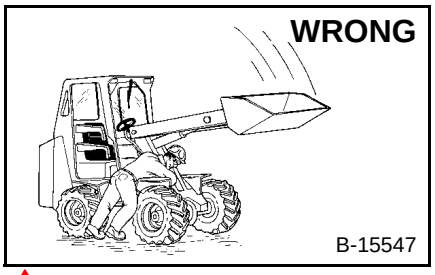

- **Disconnecting or loosening any hydraulic tubeline, hose, fitting, component or a part failure can cause lift arms to drop. Do not go under lift arms when raised unless supported by an approved lift arm support device. Replace it if damaged.**

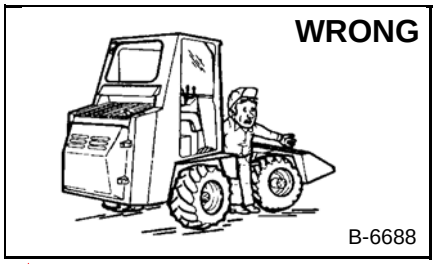

- **Always connect steering frame lock before working on the loader.**

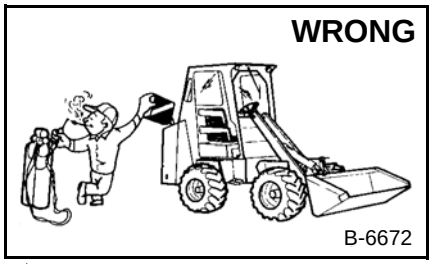

- **Do not fill the fuel tank with engine running, while smoking or when near an open flame.**

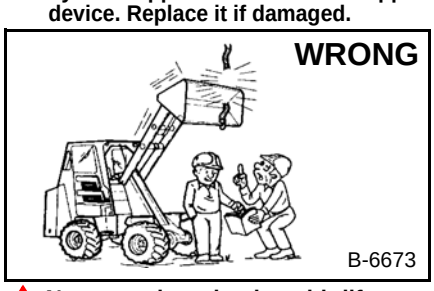

- **Never work on loader with lift arms up unless lift arms are held by an approved lift arm support device.**
- **Never modify equipment or add attachments not approved by Bobcat Company.**

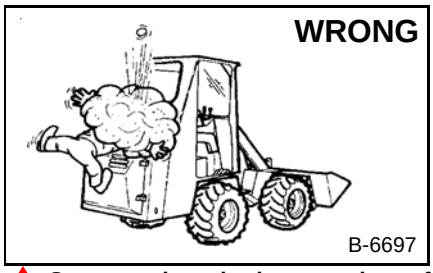

- **Stop, cool and clean engine of flammable materials before checking fluids.**
- **Never service or adjust loader with the engine running unless instructed to do so in the manual.**
- **Avoid contact with leaking hydraulic fluid or diesel fuel under pressure. It can penetrate the skin or eyes.**

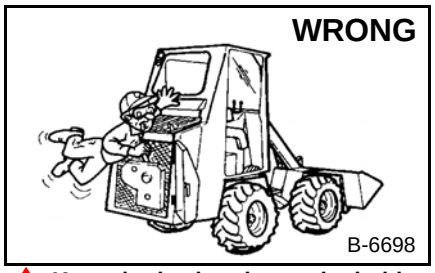

- **Keep body, jewelry and clothing away from moving parts, electrical contact, hot parts and exhaust.**
- **Wear eye protection to guard from battery acid, compressed springs, fluids under pressure and flying debris when engines are running or tools are used. Use eye protection approved for type of welding.**
- **Keep rear door closed except for service. Close and latch door before operating the loader.**

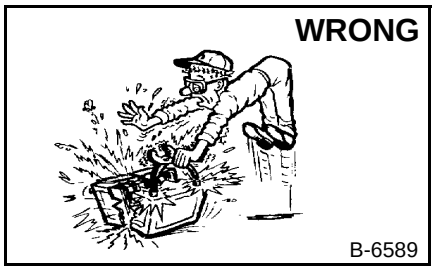

- **Lead-acid batteries produce flammable and explosive gases.**
- **Keep arcs, sparks, flames and lighted tobacco away from batteries.**
- **Batteries contain acid which burns eyes or skin on contact. Wear protective clothing. If acid contacts body, flush well with water. For eye contact flush well and get immediate medical attention.**

Maintenance procedures which are given in the Operation & Maintenance Manual can be performed by the owner/operator without any specific technical training. Maintenance procedures which are **not** in the Operation & Maintenance Manual must be performed **ONLY BY QUALIFIED BOBCAT SERVICE PERSONNEL. Always use genuine Bobcat replacement parts.** The Service Safety Training Course is available from your Bobcat dealer.

MSW04-0805

SAFETY INSTRUCTIONS

SAFETY IS YOUR RESPONSIBILITY

The Rough Terrain Forklift is a highly maneuverable and compact machine. In operation, it is rugged and useful under a wide variety of conditions. This presents an operator with hazards which are common for off-highway, rough-terrain applications but are not unique for use of the Bobcat Forklifts.

The machine has an internal combustion engine with resultant heat and exhaust. All exhaust gases can kill so the machine must be used with adequate ventilation. The machine must not be used in space with explosive dusts or gases or so that the engine exhaust contacts flammable material. The machine has a spark arrestor muffler which is required for operation in certain areas.

For machine applications, the dealer recommends the capabilities and restrictions of the machine and attachments for each application use. The dealer demonstrates the safe operation of the machine according to the manufacturer's instructional materials which are also available to all operators. The dealer can also identify unsafe modifications or use of unapproved attachments. The attachments and buckets are designed for rated capacity and secure fastening to the machine. For each model machine, the user must check with the dealer or manufacturer's literature to identify each bucket or attachment for safe loads of materials of specified densities.

The following publications provide information on the safe use of the machine and attachments:

1. The Delivery Report is used to check whether complete instructions have been given to the new owner.

2. The Operator's Manual delivered with every machine gives operating information as well as routine maintenance and service.

3. Every machine has signs (decals) which instruct on the safe care and operation of the machine. The complete signs and their location are shown in the Operator's Manual. All signs are available from the dealer.

4. The Bobcat Forklift has a plastic Operator Handbook fastened by cable to the operator cab. It has brief operations always available to the operator. The handbook is available from the dealer in an English edition or a combination English, French, German, Spanish edition.

5. The Service Manual and Parts Book are optional manuals from the dealer for use by mechanics to do shop-type service and repair work.

The dealer and owner/operator review the recommended uses of the machine and attachments at the time of delivery of the machine. If change of the use of the machine occurs in the future, the owner/operator must remember to ask the dealer for recommendations on the new use of the machine.

READ THIS MANUAL BEFORE YOU SERVICE THE BOBCAT ROUGH TERRAIN FORKLIFT (RTF)

⚠ WARNING **All operators must have instruction before operating this loader.**

This Service Manual was written to give the service personnel instructions on the safe service of the Bobcat Forklift. READ AND UNDERSTAND THIS SERVICE MANUAL BEFORE YOU SERVICE YOUR BOBCAT.

⚠ WARNING

For your safety, warnings are on the loader and in the manual. Failure to follow these warnings can cause injury or death.

IMPORTANT

This notice shows important procedures which must be followed to prevent damage to the loader.

SAFE OPERATION NEEDS A QUALIFIED OPERATOR

A QUALIFIED OPERATOR* MUST DO THE FOLLOWING:

A. UNDERSTAND THE WRITTEN INSTRUCTIONS, RULES AND REGULATIONS

1. The written instructions from the Clark Equipment Co., include the delivery report, loader operator's handbook and manual, attachment manual and machine signs (decals).

2. Check the rules and regulations at your location. The rules may include an employer's work safety requirements. Regulations may identify a hazard such as a utility supply line.

B. HAVE TRAINING WITH ACTUAL OPERATION

1. Operator training must consist of a demonstration and verbal instruction. This training is given by the Bobcat dealer before the loader is delivered.

2. The new operator should start in an area without bystanders and use all the controls until he can control the loader at full use under the conditions for his work area.

C. KNOW THE WORK CONDITIONS

1. For each material to be handled, the operator must know how to avoid exceeding the rated operating capacity of the loader. For example in handling certain loose materials with a given bucket, he must know whether he can safely take a full or part of a bucket load.

2. The operator must know any prohibited uses or work areas for the loader. For example, he needs to know about excessive slopes.

*For an operator to be qualified, he must not use drugs or alcoholic drinks which change his alertness or coordination while working. An operator who is taking prescription drugs must get medical advice on whether or not he can safely operate a machine.

FOREWORD

This manual gives instruction for correct servicing and adjustment of the Bobcat Forklift, and overhaul instructions of the drive system, machine hydraulic/hydrostatic system and general main frame parts.

Make reference to the Operator's Manual for operations instructions (Starting Procedure, Daily Checks, Vertical Mast Operations, etc.).

A general inspection of the following items must be made whenever the machine has had service or repair:

1. Check hydraulic fluid level, engine oil level and fuel supply.
2. Inspect for any sign of fuel, oil or hydraulic fluid leaks.
3. Lubricate the machine.
4. Check battery condition and cables.
5. Inspect air cleaner system for damage or leaks. Check element and make replacement, as needed.
6. Check electrical charging system.
7. Check the warning lights.
8. Check tires for wear and pressure.
9. Check the attachment for condition. Inspect the vertical mast for damage or wear.
10. Inspect safety items for condition (Operator Enclosure, Seat Belt, Safety Treads, Lights, Horn, Safety Signs [Decals], Brake, etc.).
11. Make an inspection for loose or broken parts or connections.
12. Operate the Bobcat Forklift, checking all functions.

Check the above items, if any are in need of repair tell the Owner/Operator.

CONTENTS

PREVENTIVE MAINTENANCE 1
HYDRAULIC SYSTEM 2
HYDROSTATIC SYSTEM 3
DRIVE SYSTEM 4
MAIN FRAME 5
ELECTRICAL SYSTEM 6
ENGINE SERVICE 7
TECHNICAL DATA 8
ALPHABETICAL INDEX 9

PREVENTIVE MAINTENANCE

	Paragraph Number	Page Number
ADJUSTING THE DOOR LATCH	1–7	1–4
AIR CLEANER SERVICE	1–8	1–4
ALTERNATOR BELT	1–12	1–9
BACK-UP ALARM	1–20	1–21
DELIVERY REPORT	1–4	1–2
ELECTRICAL SYSTEM	1–13	1–9
ENGINE COOLING SYSTEM	1–11	1–9
ENGINE LUBRICATION SYSTEM	1–10	1–7
ENGINE SERVICE	1–6	1–4
FRAME LOCK	1–1	1–1
FRONT & REAR AXLES	1–15	1–17
FUEL SYSTEM	1–9	1–5
HYDRAULIC/HYDROSTATIC SYSTEM	1–14	1–14
LIFTING AND BLOCKING THE BOBCAT FORKLIFT	1–2	1–1
LUBRICATION OF THE BOBCAT ROUGH TERRAIN FORKLIFT	1–18	1–19
OPERATOR CAB	1–22	1–21
SERIAL NUMBER LOCATIONS	1–3	1–2
SERVICE SCHEDULE	1–5	1–3
SPARK ARRESTOR MUFFLER	1–19	1–20
TIRE MAINTENANCE	1–17	1–17
U-JOINTS	1–16	1–17
VERTICAL MAST	1–21	1–21

⚠ WARNING

Instructions are necessary before doing service on forklift. See warnings and instructions both at beginning and throughout this manual. After doing service or making repair or adjustment, always check function of machine.

Safety glasses or goggles are always needed for eye protection from electric arcs from shorts or welding, battery acid, compressed springs, fluids under pressure, and flying debris or loose material when engines are on or tools are used. Failure to obey warnings can cause injury or death.

1 PREVENTIVE MAINTENANCE

1—1 FRAME LOCK

Before any service or repair work is done on the Bobcat Forklift, always install the steering frame lock (Fig. 1—1).

⚠ WARNING

DO NOT let anyone in or near the pivot area without the steering frame lock installed (Fig. 1—2).

1—2 LIFTING AND BLOCKING THE BOBCAT FORKLIFT

⚠ WARNING

Lift Bobcat and put blocks under the frame so that there is no danger of the machine falling and causing personal injury.

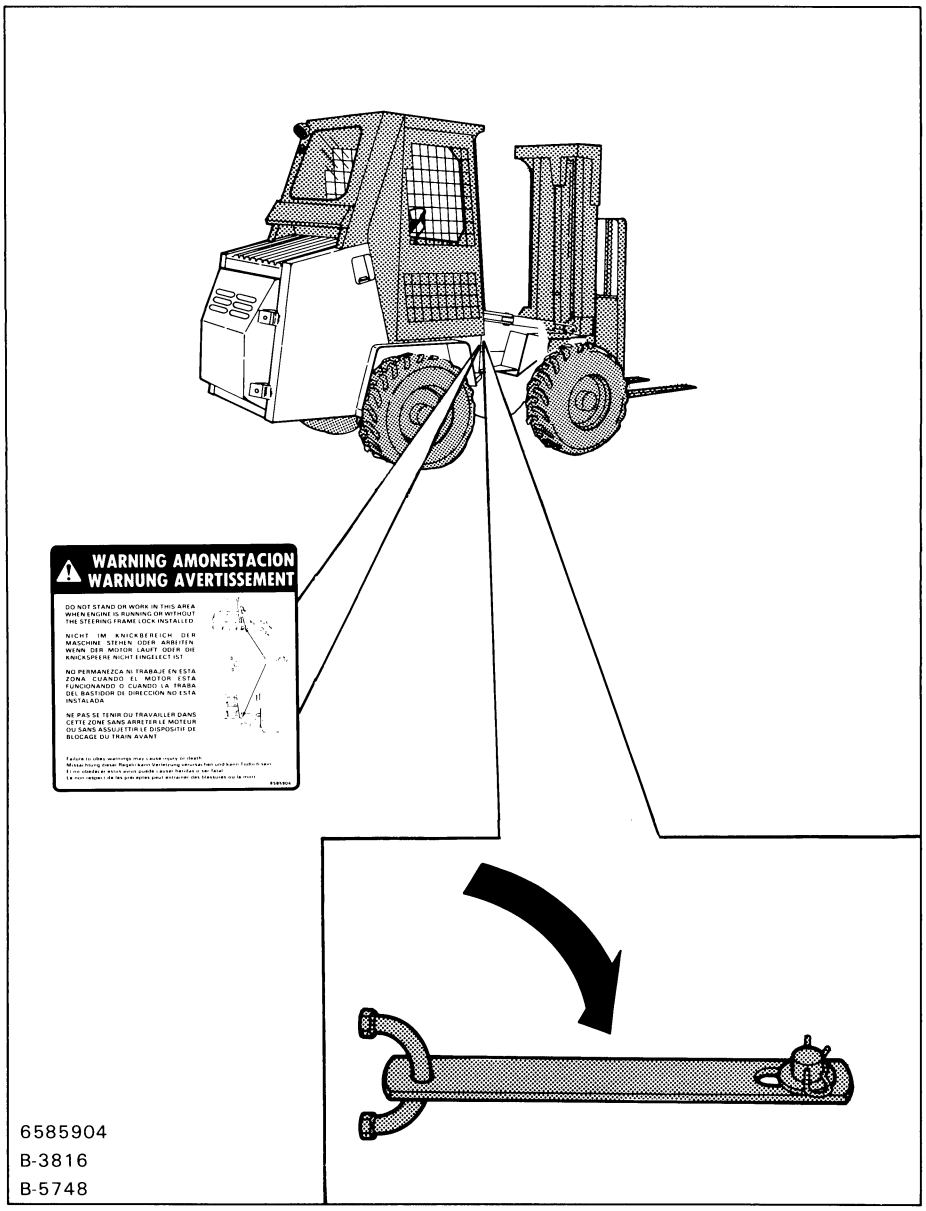

Fig. 1—1 Installing Steering Frame Lock

Before doing maintenance on the Bobcat Forklift, you must lift it up and block it as follows:

(1) Lower the vertical mast. Stop the engine and install the framelock.

(2) Put a floor jack under the rear of the machine.

(3) After the rear of the Bobcat Forklift is lifted, put a jackstand under each rear corner. Make sure the machine is level.

(4) Put the floor jack under the center of the front axle.

(5) After the front of the machine is lifted, place jackstands under each side of the front axle. Make sure the machine is level.

⚠ WARNING

Do not stand on the front wheels. The front wheels will turn freely when the machine is lifted.

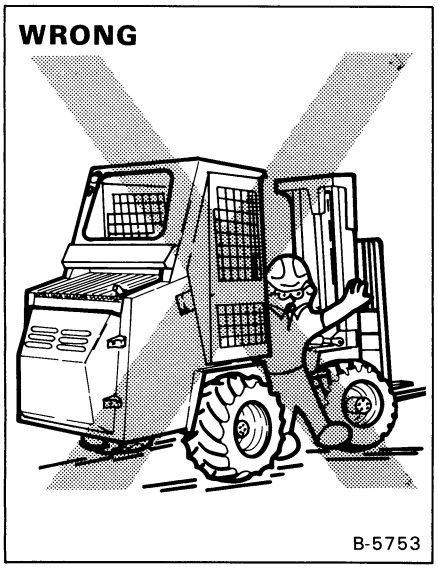

Fig. 1—2 Pivot Area Warning

1—3 SERIAL NUMBER LOCATIONS

It is important to make correct reference to the Serial Number of the Bobcat Forklift, the vertical mast and/or engine when making repairs or ordering parts. It is possible that the present machines do not use all of the same parts as earlier machines or it is possible that different procedures are used for service or repair.

Always have these numbers available when ordering parts or working on the Bobcat Forklift.

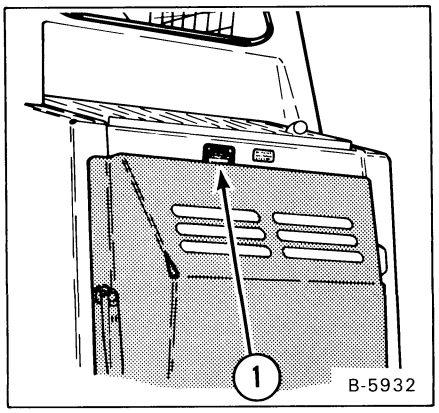

Fig. 1—3 Forklift Serial Number

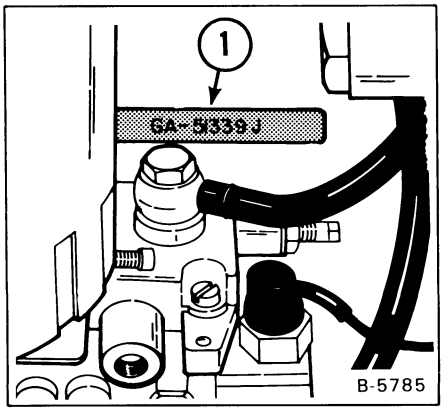

Fig. 1—4 Engine Serial Number

1—3.1 Machine Serial Number

The Bobcat Forklift serial number is located at the rear of the machine over the rear door (Fig. 1—3, Item 1).

Explanation of the Serial Number:

XXXX M XXXX

- XXXX — Production Sequence (Series)
- M — Factory Use Only
- XXXX — Model, Engine Version

1—3.2 Engine Serial Number

The engine serial number is on the right side of the engine, above the injection pump (on the cylinder block) (Fig. 1—4, Item 1).

1—3.3 Vertical Mast Serial Number

The vertical mast model/serial number is located on the right side of the outside rail (Fig. 1—5).

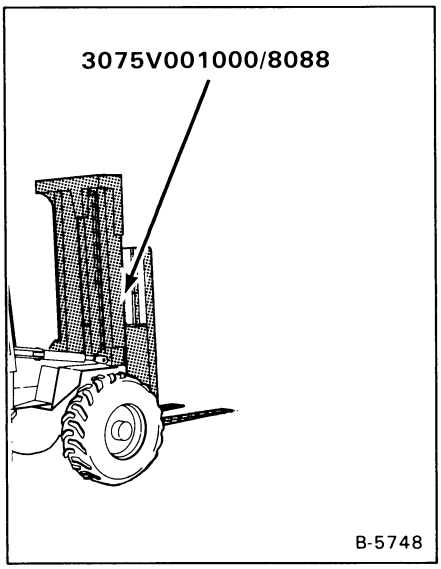

Fig. 1—5 Vertical Mast Model/Serial Number

Explanation of the Model/Serial Number:

XXXX V XXXXXX XXXX

- XXXX — Production Sequence (Series)
- V XXXXXX — Model
- XXXX — Size

1—3.4 Axle Serial Numbers

All axles have identification numbers and letters on them. The front axle serial number is located on the left hand tube near the cover, 45° up from the bottom center of the tube. The rear axle serial number is located on the right hand tube near the cover, 45° up from the bottom center of the tube.

1—4 DELIVERY REPORT (Fig. 1—6)

The Delivery Report is to be filled out by the dealer and signed by the owner or operator when the Bobcat Forklift is delivered. An explanation of the form must be given to the owner. Make sure it is filled out completely.

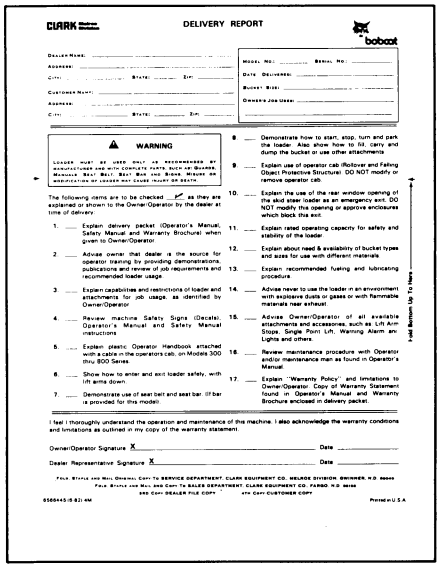

CLARK DELIVERY REPORT bobcat

WARNING

Fig. 1—6 Delivery Report

1—5 SERVICE SCHEDULE

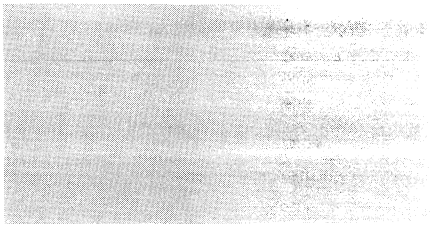

You must do maintenance work at regular intervals. Failure to do so will result in damage to the Forklift or the engine. The service schedule is a guide for correct maintenance of the Bobcat Forklift. Follow this service schedule as explained below unless it is to increase the frequency of intervals when the Bobcat Forklift is used in very hot, cold, dusty or corrosive conditions.

SERVICE SCHEDULE		HOURS					
ITEM	SERVICE REQUIRED	8-10	50	100	200	500	1000
Engine Oil	Check the oil and add as needed.	■					
Engine Air Cleaner	Check the condition indicator. Inspect the air cleaner system. Replace the outer element when the red ring shows in the indicator window.	■					
Tires	Check tires for damage and correct air pressure.	■					
Seat Belt	Check function and condition of the seat belt. Replace if necesary.	■					
Safety Signs (Decals)	Check for damaged decals. Replace any decals that are not in the correct location.	■					
All Pivot Points	Add lubricant to all fittings (See Page 1—19).	■					
Hydraulic Fluid	Check the fluid level and add the recommended fluid as needed.	■					
Engine Coolant System	Check coolant level and add as needed. Remove any debris from the grill area.	■					
Wheel Nuts	▲Tighten wheel nuts to 115 ft.-lbs. (155 Nm) torque.	■					
Fuel Filter Water Trap	Remove any trapped water from the filter.	■					
Batteries	Check the battery cables and the water level of the batteries.		■				
*Cylinder Heads	Tighten cylinder head bolts to the correct torque.		■				
Hydraulic Control Lever	Check for correct operation. Make repairs and adjustments as needed.		■				
Pallet Fork Lock Levers	Check the locking levers for condition and correct operation.		■				
Brakes	Check the brake for correct operation. Make adjustment as necessary.		■				
Alternator Drive Belt	Check condition and tension of the belt.		■				
Engine Oil & Filter	Replace oil and filter.		■				
Carriage Chains	Check for wear and correct tension. Put oil on chains.			■			
Spark Arrestor Muffler	Empty spark chamber.			■			
Hydraulic Filter	Replace the right hand filter.			■			
U-Joints (Drive Shaft)	Lubricate with a good quality grease.			■			
Final Fuel Filter	Replace the filter element.				■		
Front & Rear Axle	Check oil level and add oil as needed.				■		
U-Joint (Engine to Hydrostatic Pump)	Add grease to fittings (3).				■		
Bronze Filter (40 Micron)	Change the 40 micron filter in the hydrostatic port block.					■	
Hydraulic/Hydrostatic System	Replace the fluid and filters. Clean the cap and vent.						■

* **Dealer Service Only (This procedure is required only once, after the first 50 hours of operation).**

▲ Check the wheel nut torque every 8 hours for the first 24 hours of operation.

1—6 ENGINE SERVICE

⚠ WARNING

Stop, cool and clean the engine of flammable material. Never service or adjust machine with engine running unless instructed to do so.

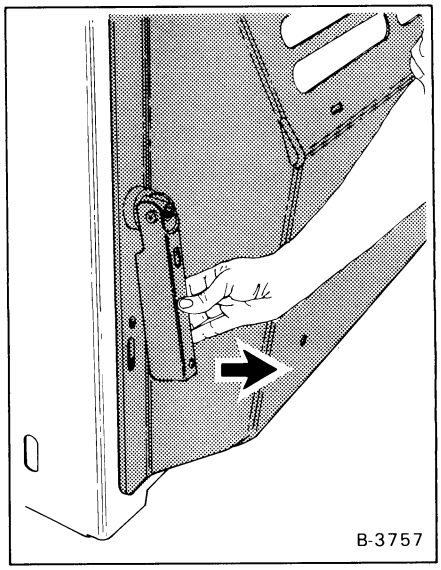

Fig. 1—7 Releasing Rear Door

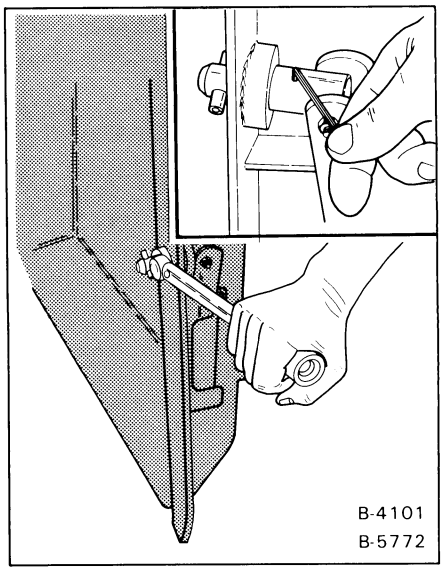

Fig. 1—8 Adjusting the Latch

Open the rear door to service the engine. Pull the door latch up and to the left to release the door latch (Fig. 1—7). The door can then be fully opened to get to the engine.

1—7 ADJUSTING THE DOOR LATCH

Loosen the set screw (Fig. 1—8, Inset). Turn the nut on the end of the latch pin (Fig. 1—8). The door must contact the machine at the bottom (Fig. 1—9, Item 1) and the top with the lever in the position shown in figure 1—9. It will take approximately 50 lbs. of force to push the latch down. When the latch is adjusted correctly, tighten the set screw. The set screw must be aligned with the flat surface of the bolt.

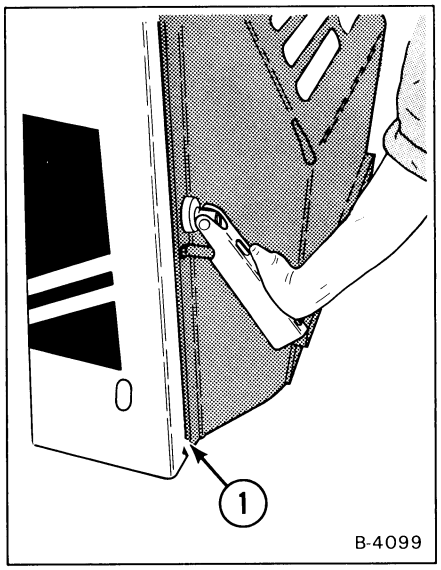

Fig. 1—9 Closing the Door

⚠ WARNING

Keep the rear door closed except for service. Make sure you close the door and fasten the latch tightly before operating the Bobcat Forklift.

1—8 AIR CLEANER SERVICE

It is important to check the air cleaner condition indicator at regular intervals for good engine performance and long service life. Do not service the air cleaner until the red condition indicator ring shows.

NOTE: Before changing the air cleaner, push the button on the condition indicator (Fig. 1—10, Item 1), start the engine and if the red ring still shows, do the following service procedure.

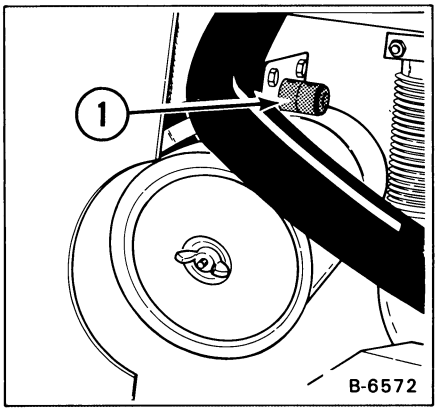

Fig. 1—10 Condition Indicator

The large air cleaner element (outer) must be replaced when the red ring shows in the window of the condition indicator (Fig. 1—10, Item 1). DO NOT remove the inner filter. Service the air cleaner as follows:

(1) Remove the wing nut (Fig. 1—10, Item 2) and remove the air cleaner cover. Remove the filter element (Fig. 1—11, Item 1).

(2) Clean the inside of the filter housing (Fig. 1—11, Item 2) so that the element has a smooth surface to contact at the seal. Make sure the air cleaner housing is free of corrosion, especially if the Bobcat Forklift is used under corrosive conditions.

(3) Install the outer filter element. DO NOT replace the inner filter element (Fig. 1—12, Item 3) unless the red ring still shows (after the engine is running) in the condition indicator window after replacing the outer element.

(4) Install the air cleaner cover (Fig. 1—11, Item 4).

(5) Push the button at the condition indicator, to remove the red ring in the window.

(6) Check that the hoses and the clamps are tight.

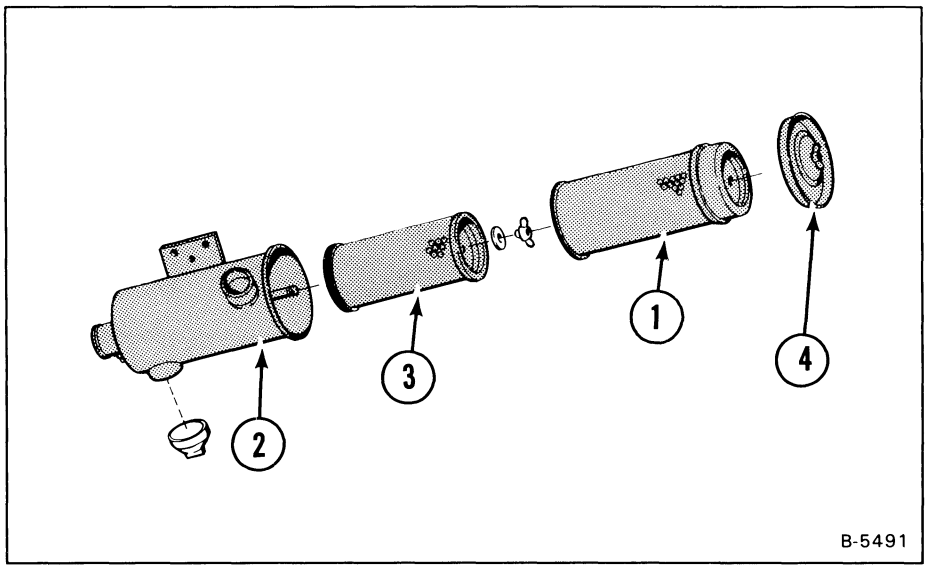

Fig. 1—11 Air Cleaner Assembly

1—9 FUEL SYSTEM

Use number 2 diesel fuel in the engine. During very cold temperature conditions, use number 1 fuel.

⚠ WARNING

Never add fuel to the Bobcat Forklift when the engine is running or is hot. NO SMOKING (Fig. 1—12).

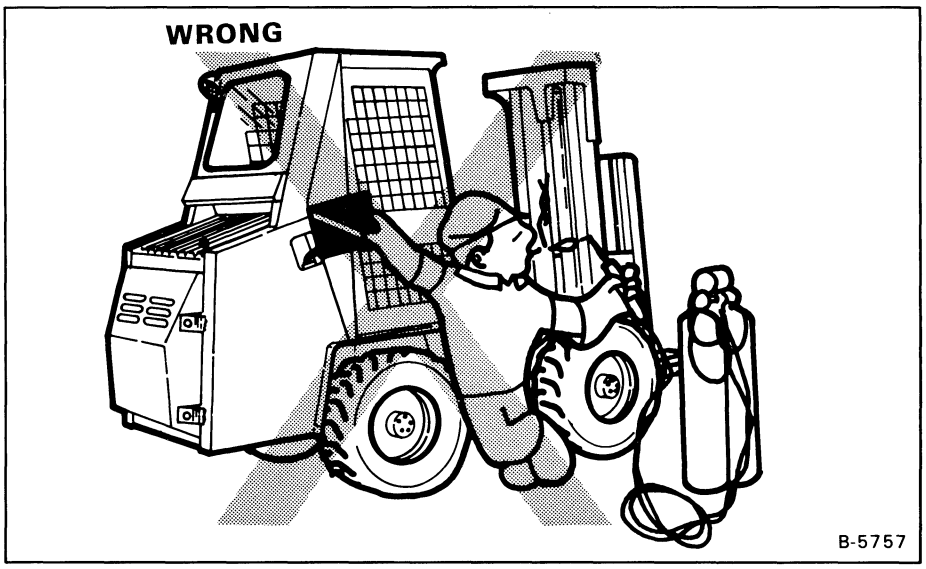

Fig. 1—12 Fuel Fill Warning

1—9.1 Fuel System Service

Remove the filler cap to service the fuel tank as follows (Fig. 1—13, Item 1):

(1) Use a clean, approved safety container to add fuel.

(2) The key switch must be in the "OFF" position and the engine cool.

(3) Add fuel only in an area that has a free movement of air or no open flames or sparks. NO SMOKING (Fig. 1—12).

(4) Use only clean fuel of the correct specifications (See Section 8 for specifications).

(5) Tighten the cap on the fuel tank on the right side of the machine (Fig. 1—13, Item 1).

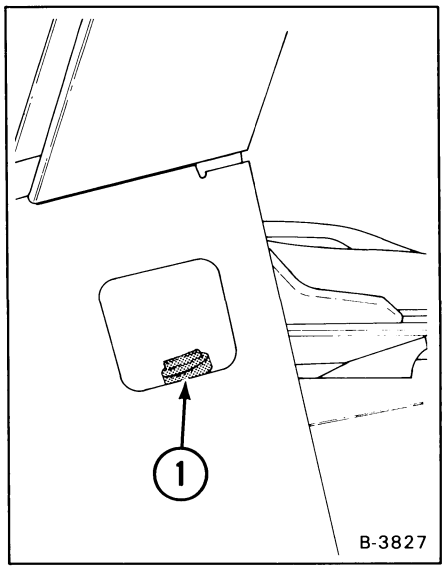

Fig. 1—13 Fuel Fill Location

1—9.2 Fuel Filter

The fuel filter is installed at the front left of the engine. Replace the filter element (Fig. 1—14) every 200 hours of machine operation.

Check the water trap every 50 hours of machine operation. If there is water in the water trap at the bottom of the filter, loosen the thumb screw (Fig. 1—14, Item 1). When fuel flows from the drain with no water, tighten the thumb screw.

To replace the fuel filter element:

(1) Clean the area around the fuel filter. Put a clamp on the fuel supply hose from the fuel tank.

(2) Remove the thumb screw at the bottom of the filter, drain the fuel from the filter.

(3) Remove the filter by removing the small bolt at the top of the filter head (Fig. 14, Item 2) while holding the nut below the filter bowl. Remove the filter bowl.

(4) Check the condition of the seals. Replace as needed.

(5) Install the filter, bowl, nut and thumb screw. Tighten the thumb screw finger tight only. Remove the clamp from the fuel line.

(6) Remove the air from the fuel system.

(7) After the engine is running, check for leaks.

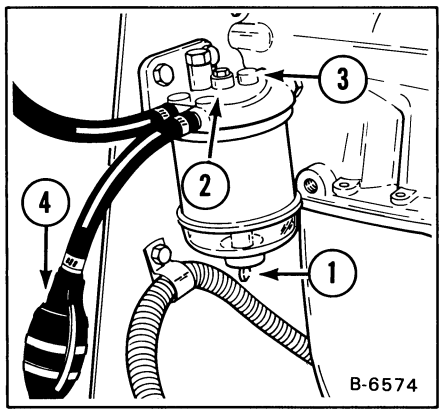

Fig. 1—14 Fuel Filter

1—9.3 Removing Air From The Fuel System

After replacement of the fuel filter element or when the fuel tank has run out of fuel, the air must be removed from the fuel system before starting the engine. To remove the air from the fuel system:

(1) Open the rear door of the machine.

(2) Open the vent plug on the top of the fuel filter (Fig. 1—14, Item 3).

(3) Operate the hand pump (Fig. 14, Item 4) until the fuel flows from the vent plug on the top of the fuel filter (Fig. 1—14, Item 3).

(4) Close the vent plug on the top of the fuel filter.

(5) Again operate the hand pump until the hand pump feels solid.

(6) Loosen the vent pump on the fuel injection pump (Fig. 1—15, Item 1).

(7) Operate the hand pump (Fig. 1—14, Item 3) until fuel flows from the vent plug with no air bubbles.

(8) Close the vent plug on the injection pump before releasing the hand pump.

(9) Loosen the high pressure tubelines at the fuel injectors (Fig. 1—16).

(10) Move the throttle to the half open position. Turn the engine with the starter until clear fuel shows at the fittings of the injectors.

NOTE: Turn the engine for 30 seconds only with 60 seconds between starts.

(11) Tighten the fittings of the high pressure tubelines to 15 ft.-lbs. (20 Nm) torque.

IMPORTANT **When removing the high pressure tubelines from the injectors. DO NOT bend them.**

(12) Close the rear door.

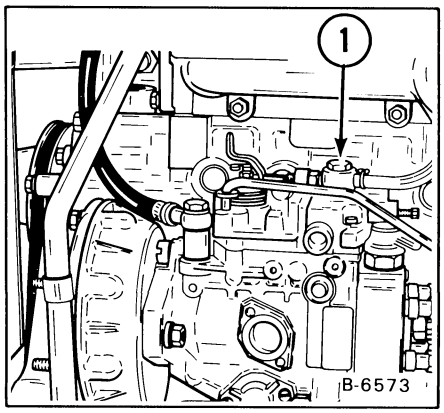

Fig. 1—15 Fuel Injection Pump

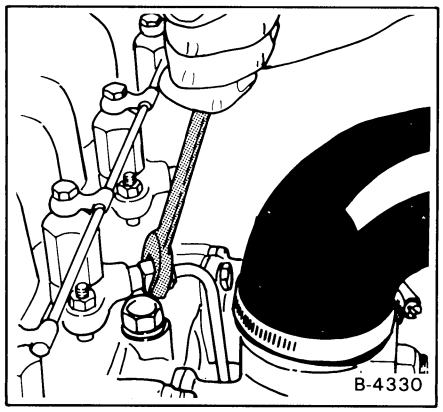

Fig. 1—16 Fuel Injectors

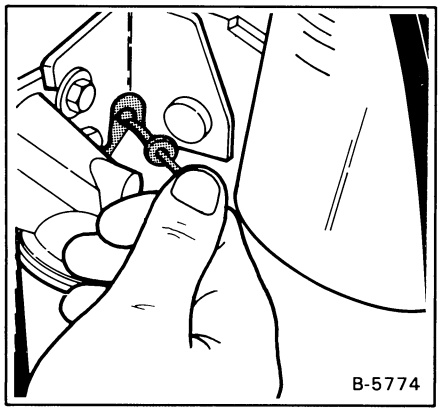

Fig. 1—17 Oil Dipstick

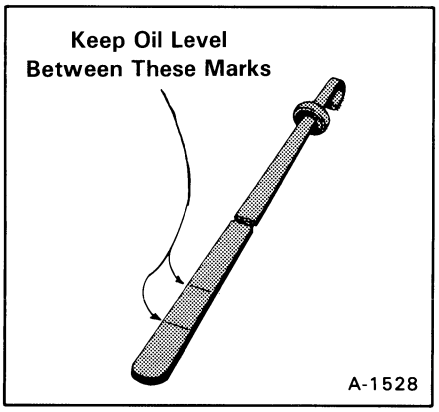

Fig. 1—18 Engine Dipstick

1—10 ENGINE LUBRICATION SYSTEM

Check the oil level each day.

To check the oil level, stop the engine, open the rear door and remove the dipstick (Fig. 1—17).

Keep the oil level between the marks on the dipstick (Fig. 1—18). Do not fill above the top mark. Use a good quality motor oil that meets API Service Classification of CC or CD (See the Chart).

1—10.1 Replacement Of Engine Oil And Filter

The original oil fill at the factory is 5W-30 engine oil. Replace the engine oil and filter every 50 hours of machine operation.

RECOMMENDED SAE VISCOSITY NUMBER
(LUBRICATION OILS FOR ENGINE CRANKCASE)

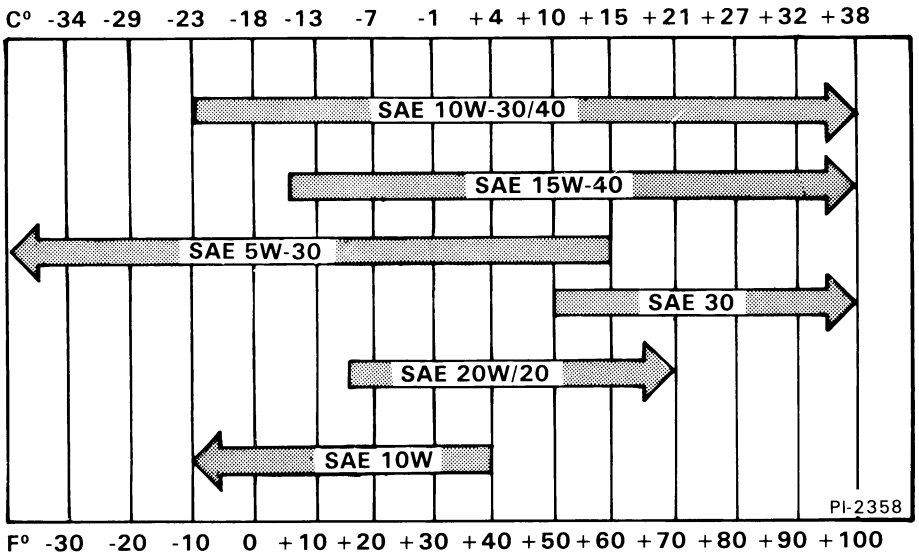

TEMPERATURE RANGE ANTICIPATED BEFORE NEXT OIL CHANGE

(DIESEL: USE API CLASSIFICATION CC)

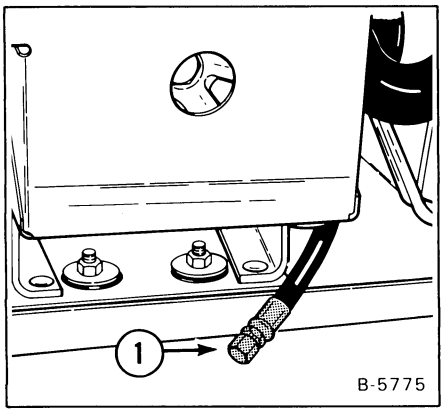

Fig. 1—19 Engine Oil Drain

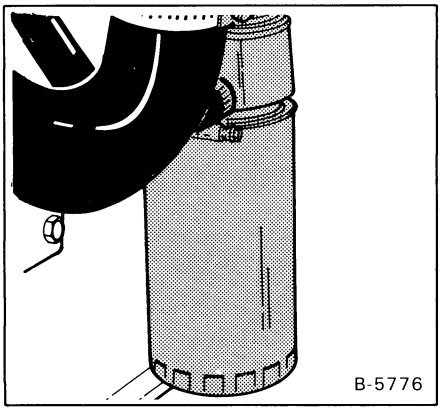

Fig. 1—20 Engine Oil Filter

To replace the engine oil and filter, use the following procedure:

(1) Run the engine until it is at operating temperature. Stop the engine and open the rear door.

(2) Remove the drain plug at the end of the hose (Fig. 1—19, Item 1).

(3) Remove the oil filter (Fig. 1—20).

(4) Clean the filter housing surface. Put grease on the gasket of the new filter element. Install the filter element and hand tighten only.

(5) Install the drain plug (Fig. 1—19).

(6) Remove the oil fill cap and put in 7.5 qts. (7 L) of oil (Fig. 1—21) (See the Oil Chart).

(7) Start the engine let it run for several minutes. Stop the engine and check the oil level (Fig. 1—18). Add oil if the level is not at the top mark on the dipstick.

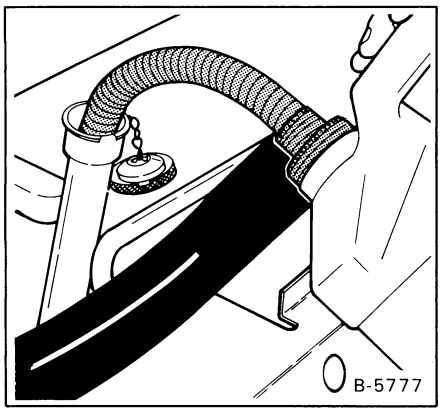

Fig. 1—21 Engine Oil Fill

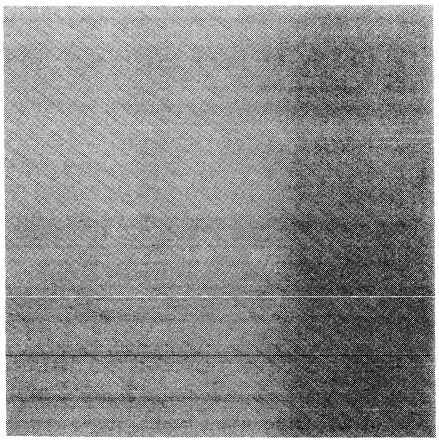

1—11 ENGINE COOLING SYSTEM

Coolant Level

The cooling sytem has a coolant recovery tank. The location of the tank is behind the rear door and in the left upright (Fig. 1—22). Remove the cap from the tank to check the coolant level. When the engine is cool, the coolant recovery tank must be 1/3 full. Add coolant to the tank when the coolant level is low.

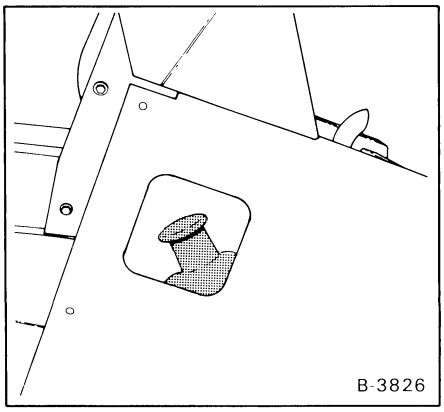

Fig. 1—22 Coolant Recovery Tank

1—11.1 Removing Coolant From The Cooling System

Clean the cooling system once a year. The complete cooling system must be drained, flushed and refilled with clean coolant.

Remove the rear grill from the machine. Remove the radiator cap from the radiator. Install a hose on the engine block drain (Fig. 1—23, Item 1) and open the drain to remove the coolant from the system.

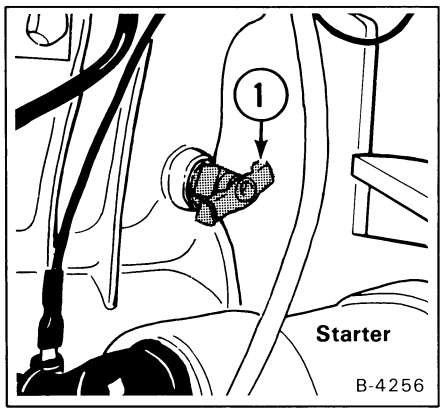

Fig. 1—23 Engine Coolant Drain

After the coolant is removed, remove the hose and close the engine block drain. Fill the radiator to the top of the fill pipe with premixed coolant and install the radiator cap. Install the rear grill.

NOTE: Protect the cooling system from freezing temperatures by adding premixed 50/50 ethylene glycol (anti-freeze) and water to the system.

Remove the cap from the coolant recovery tank (Fig. 1—22) and fill the tank 1/3 full of premixed coolant.

1—12 ALTERNATOR BELT

To adjust the belt tension, use the following procedure:

(1) Remove the belt shield (Fig. 1—24).

(2) Loosen the adjustment bolt (Fig. 1—25, Item 1) and move the alternator to set the belt tension at .28-.35" (7-9 mm) at 13 to 15 pounds of force.

(3) Tighten the adjusting bolt at the alternator.

(4) Install the belt shield.

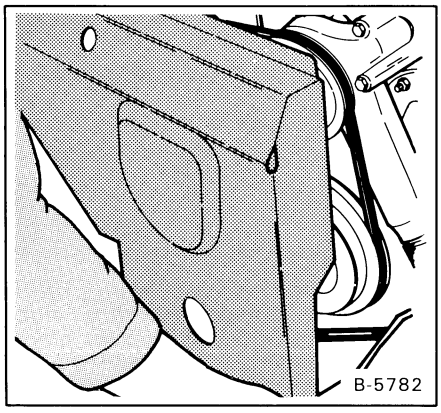

Fig. 1—24 Removing Engine Shield

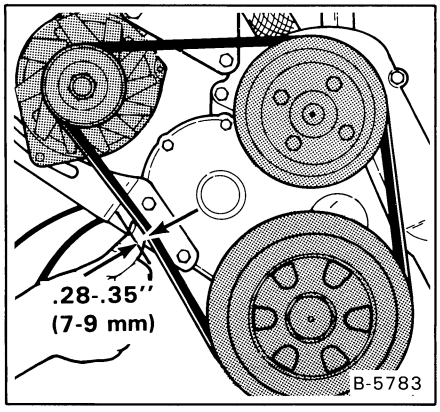

Fig. 1—25 Checking Belt Tension

1—13 ELECTRICAL SYSTEM

The Bobcat Forklift has a 12 volt, negative ground alternator charge system (Fig. 1—26 & 1—27).

The electrical system is protected by two (2) fuses. The fuses are located on the dash panel (Fig. 1—26). The fuses will protect the electrical system when there is an electrical overload. The reason for the overload must be found before starting the engine again. Look for an open wire or a short in the electrical system.

OPERATOR GUARD WIRING DIAGRAM
2000 RTF

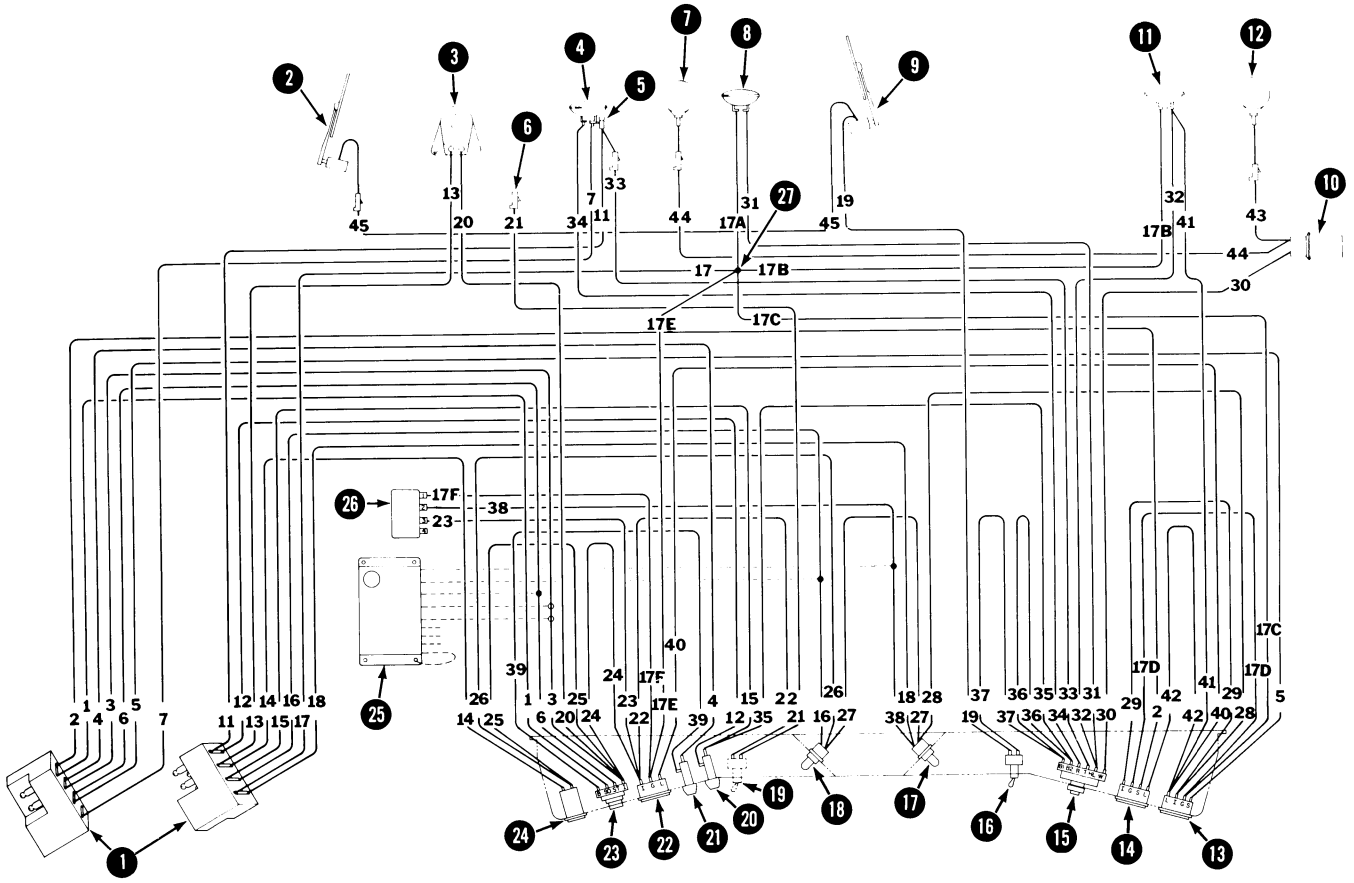

WIRE LEGEND

#'s	COLOR	GAUGE	#'s	COLOR	GAUGE
1	Purple	16	35	Red/White	16
2	Lt. Blue/Black	16	36	Red/White	18
3	White/Orange	16	37	Red/White	18
4	Lt. Green/White	12	38	Yellow/Black	18
5	White/Orange	16	39	Red/White	16
6	Purple/White	16	40	Grey	18
7	Black	16	41	Grey	18
8	Not Used		42	Grey	18
9	Not Used		43	Brown	16
10	Not Used		44	Brown	16
11	Pink	16	45	Orange/Black	16
12	Red/Black	12			
13	Orange/Green	16			
14	Yellow/Brown	16			
15	Orange/Dk. Blue	16			
16	Yellow/Green	16			
17	Black	12			
17A	Black	16			
17B	Black	16			
17C	Black	18			
17D	Black	18			
17E	Black	18			
17F	Black	18			
18	Yellow/Black	16			
19	Orange/Black	16			
20	Orange	16			
21	Orange	16			
22	Orange	16			
23	Orange	16			
24	Orange	16			
25	Orange	16			
26	Orange	18			
27	Orange	18			
28	Orange	18			
29	Orange	18			
30	Brown	16			
31	Dk. Blue	16			
32	Dk. Blue	16			
33	Pink	16			
34	Dk. Blue/White	16			

PARTS LEGEND

1. Harness Connector
2. Rear Wiper (Opt.)
3. Back-Up Alarm
4. Rear Lamp
5. Tail Lamp
6. Accessories (Fused & Switched)
7. Left Flasher Lamp (Opt.)
8. Left Front Lamp
9. Front Wiper
10. Flasher (Opt.)
11. Right Front Lamp
12. Right Flasher Lamp (Opt.)
13. Engine Temperature Gauge
14. Fuel Gauge
15. Light Switch
16. Wiper Switch
17. "Trans" Warning Lamp
18. "Eng" Warning Lamp
19. Accessory Switch (Opt.)
20. Fuse (Accessory)
21. Fuse (Ignition)
22. Voltmeter
23. Ignition Switch
24. Hourmeter
25. Shut-Down Module (Opt.)
26. Time Delay Switch
27. Operator Guard Ground

● Tee Splice

○ Butt Splice

E-1427

Fig. 1—26 Operator's Guard Electrical Circuitry

ENGINE WIRING DIAGRAM
2000 RTF

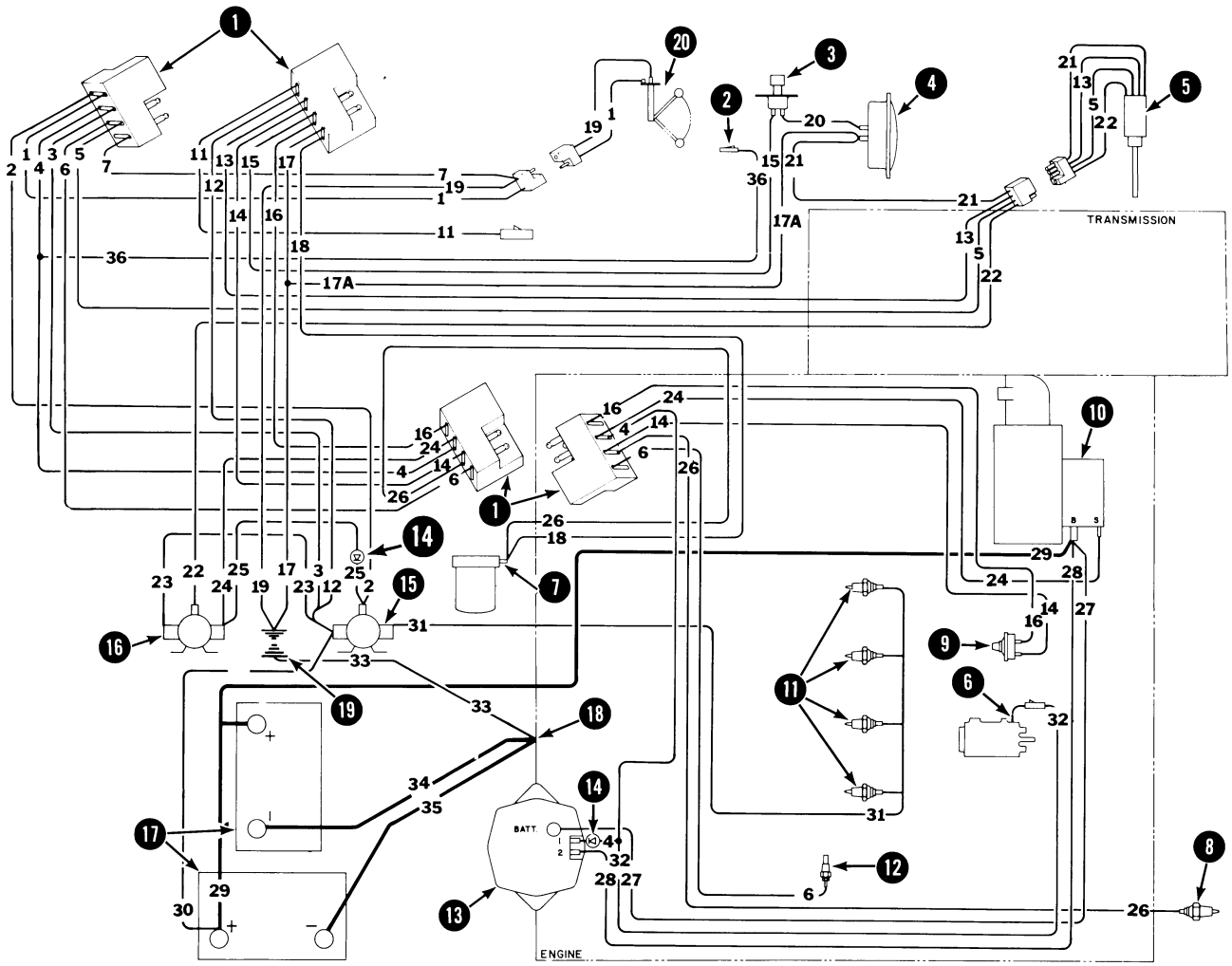

WIRE LEGEND

#'s	COLOR	GAUGE	#'s	COLOR	GAUGE
1	Purple	16	30	Cable	
2	Lt. Blue/Black	16	31	Lt. Blue/Orange	8
3	Red	12	32	White/Black	16
4	Lt. Green/White	12	33	Cable	
5	White/Orange	16	34	Cable	
6	Purple/White	16	35	Cable	
7	Black	16	36	Orange	12
8	Not Used				
9	Not Used				
10	Not Used				
11	Pink	16			
12	Red/Black	12			
13	Orange/Green	16			
14	Yellow/Brown	16			
15	Orange/Dk. Blue	16			
16	Yellow/Green	16			
17	Black	12			
17A	Black	16			
18	Yellow/Black	16			
19	Black	16			
20	Orange/Dk. Blue	16			
21	Black	16			
22	White	16			
23	Red	12			
24	White/Lt. Green	12			
25	Lt. Blue/Yellow	16			
26	Yellow/Black	16			
27	Red	12			
28	Lt. Green	16			
29	Cable				

PARTS LEGEND

1. Harness Connector
2. Chassis Power (Fused & Switched)
3. Horn Switch
4. Horn
5. Neutral Start/Back-Up Alarm Switch
6. Fuel Shut-off
7. Hydraulic Filter Pressure
8. Hydraulic Oil Temperature
9. Engine Oil Pressure
10. Starter
11. Glow Plugs
12. Engine Coolant Temperature
13. Alternator
14. Diode (2)
15. Glow Plug Relay
16. Start Relay
17. Battery
18. Engine Ground
19. Frame Ground
20. Fuel Sender

● Tee Splice

○ Butt Splice

E-1426

Fig. 1—27 Engine Electrical Circuitry

To service the electrical system:

(1) Check that the battery cables are clean and tight and check the water level of the batteries. Remove any acid or corrosion from the battery and cables with a sodium bicarbonate (baking soda) and water solution (Fig. 1—28). Cover the terminals with Clark Battery Saver to prevent corrosion.

(2) Check the tension of the alternator belt (See figure 1—25 for the correct belt adjustment).

(3) Make sure that all wire connectors are tight.

(4) Check for broken or open wires.

(5) Two (2) 25 ampere fuses are installed in the dash panel. If the fuses become damaged, replace them with the same type and size fuses.

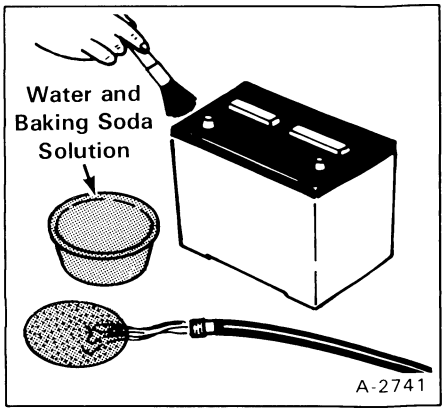

Fig. 1—28 Cleaning the Battery

NOTE: The "ENG" warning light and the transmission light will come "ON" when the key switch is turned "ON". When the engine is started the engine light must go "OFF". If it does not go off, stop the engine and find the problem. The transmission light will go off after a time of 4 to 8 seconds.

1—13.1 Using An Extra Battery (Booster Starting)

⚠ WARNING

Lead-acid batteries produce flammable and explosive gases. Keep arcs, sparks, flames and lighted tobacco away from battery. When using an extra battery to "jump" start an engine, make connections as recommended in manual. When connecting extra battery for "jump" start always make last connection (negative cable) to engine (never at battery). When removing "jump" start cables, always remove negative cable from engine first. Never charge frozen battery.

If it is necessary to use an extra battery to start the engine, BE CAREFUL! This is a two (2) person operation. There must be one person in the operator's seat and one person to connect and disconnect the battery cables.

⚠ WARNING

Lead-acid batteries contain sulfuric acid which will damage the eyes or skin on contact. Always wear goggles to avoid acid in the eyes. If acid contacts eyes, wash immediately with much clean water and get medical attention. Wear rubber gloves and protective clothing to keep acid off the skin. If acid contacts the skin, wash off immediately with clean water.

(1) The ignition must be in the off position.

(2) The battery to be used must be of the same voltage.

(3) Battery terminals have identification marks. The positive terminal is marked (+) and the negative terminal is marked (—).

(4) The negative terminal (—) of the battery must be connected to the engine.

⚠ WARNING

DO NOT charge a frozen battery because it can explode and cause personal injury. Let the battery warm to 60°F (15.5°C) before connecting to a battery charger.

(5) Connect the end of the first cable to the positive terminal (+) of the booster battery. Connect the other end of the same cable to the positive terminal (+) of the machine battery (Fig. 1—29).

NOTE: Figure 1—29 does not show the batteries as they are located in the machine.

(6) Connect the end of the second cable to the negative terminal (—) of the booster battery. Connect the other end of the second cable to the engine. DO NOT connect the cable directly to the negative terminal (—) of the machine battery. Connecting the cable directly to the negative terminal (—) of the machine battery can cause a spark and destroy the battery and cause personal injury.

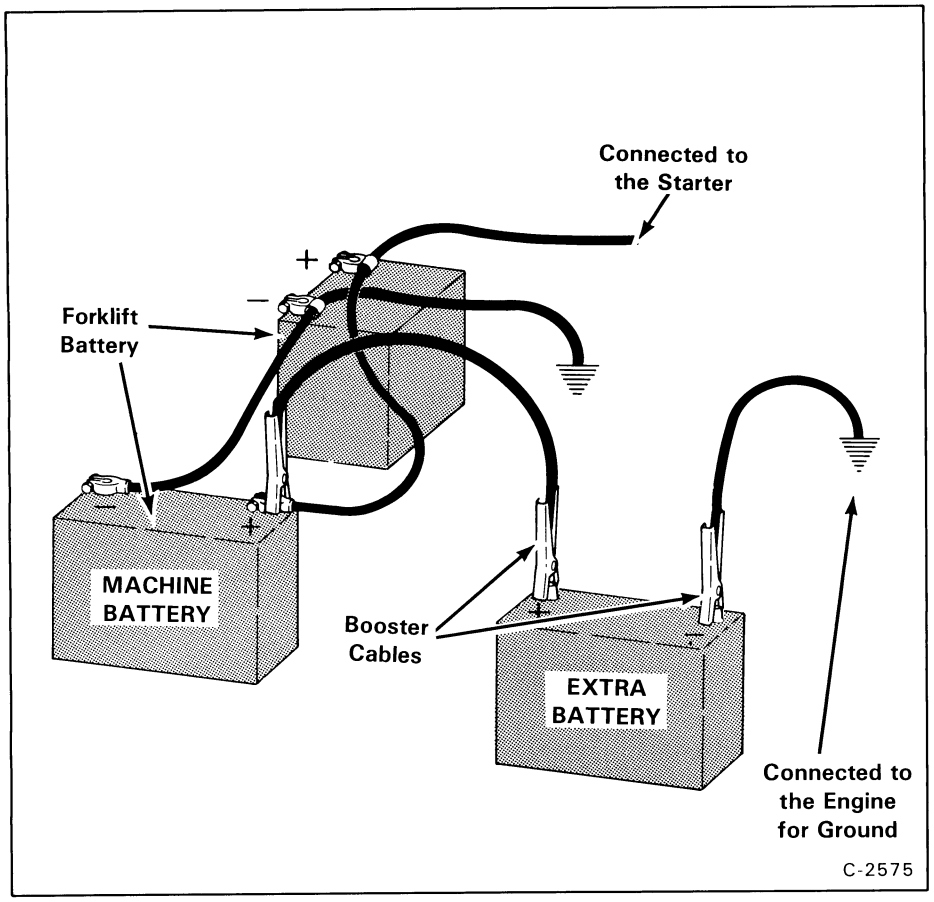

Fig. 1—29 Connecting the Extra Battery

(7) Keep the cables away from the fans and belts.

NOTE: The operator must be in the operator's seat and have the seat belt fastened.

(8) Start the engine.

(9) After the engine has started, remove the cable connected to the engine.

(10) Then remove the cable from the machine battery post positive terminal (+).

(11) Install the rubber covers over the battery terminals.

IMPORTANT

Damage to the alternator will occur if:

1. **The engine is operated with battery cables disconnected.**
2. **The cables are connected when using a fast charger or when welding on the Bobcat Forklift (Remove both cables from the battery).**
3. **The extra battery cables are connected wrong.**

1—13.2 New Battery Installation

(1) Remove the battery cables (negative cable first) (Fig. 1—30). Remember the position of the positive terminal and the negative terminal so you can connect the cables correctly after the new battery is installed.

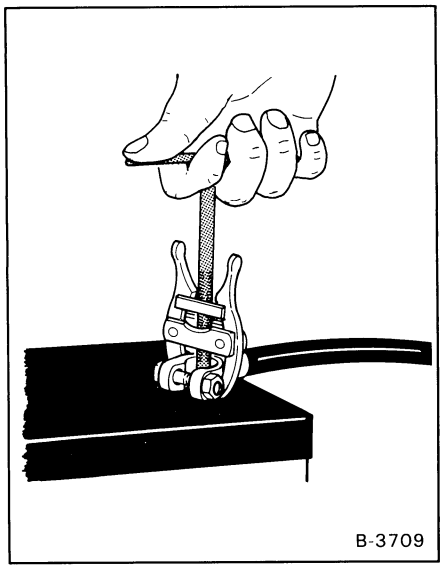

Fig. 1—30 Removing the Cable

(2) Remove the batteries' hold down clamps (Fig. 1—31). Remove the batteries from the engine compartment.

(3) Clean the terminal posts (Fig. 1—32) of the new batteries. Install the batteries in the engine compartment. Install the hold down clamps.

NOTE: DO NOT touch the battery terminals with any metal.

(4) Install and tighten the battery cables. Connect the ground (negative) cable last to prevent sparks.

NOTE: If one battery needs replacement, you must replace both batteries.

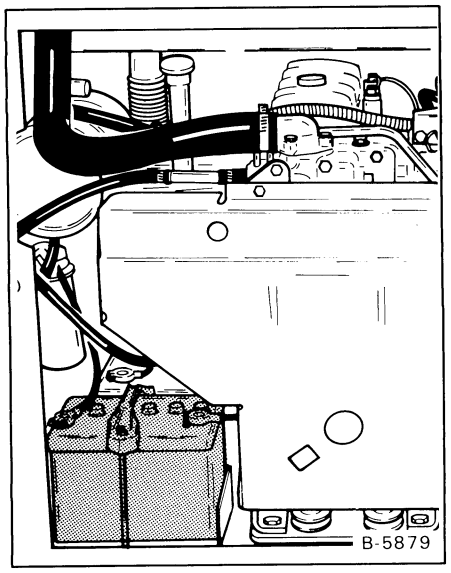

Fig. 1—31 Location of Batteries

1—14 HYDRAULIC/HYDROSTATIC SYSTEM (Fig. 1—33)

The hydraulic and hydrostatic systems use the same hydraulic fluid reservoir..

The system has a vane pump that supplies hydraulic fluid to the control valve and the lift and tilt cylinders.

Fluid also goes from the control valve to the oil cooler.

There are two (2) filters (one #10 micron and one #3 element) installed in the system. They are in the engine compartment. One is located on the fluid reservoir tank (Fig. 1—34, Item 1) and the other is under the air cleaner (Fig. 1—35, Item 1).

The location of the oil cooler is above the engine. The oil cooler is used for cooling the hydraulic/hydrostatic fluid.

1—14.1 Hydraulic/Hydrostatic Fluid Reservoir

Use only recommended fluid in the hydraulic/hydrostatic system (See Section 8 for the correct fluid to use).

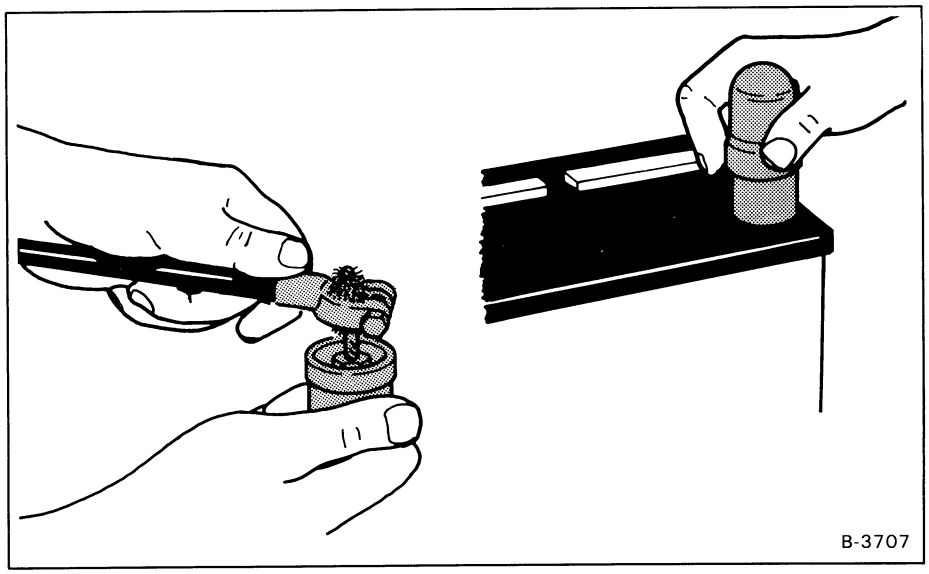

Fig. 1—32 Cleaning the Battery Terminals

2000 ROUGH TERRAIN FORKLIFT HYDRAULIC & HYDROSTATIC CIRCUITRY

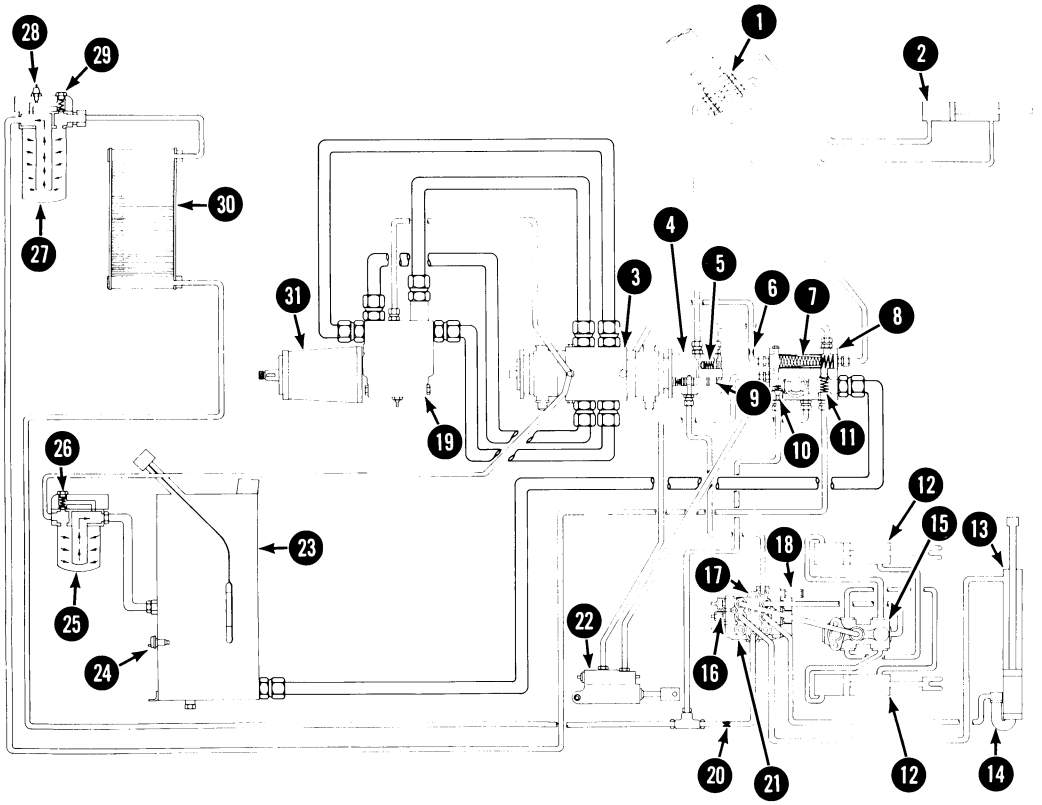

1. STEERING CONTROL VALVE
2. STEERING CONTROL CYLINDER
3. HYDROSTATIC PUMPS
4. HYDRAULIC PUMP (Vane), 21.5 GPM (81 L/m) @2600 RPM (Governor RPM)
5. STEERING RELIEF VALVE, 2000 PSI (13790 kPa)
6. ORIFICE
7. FILTER, 40 micron
8. PORT BLOCK
9. FLOW DIVIDER VALVE, 7.3 GPM (27,6 L/m) to Steering 14.2 GPM (53,7 L/m) to Hydraulics
10. BY-PASS VALVE, 120 PSI (827 kPa)
11. COLD WEATHER BY-PASS VALVE, 300 PSI (2069 kPa)
12. TILT CYLINDERS
13. LIFT CYLINDER
14. FLOW RESTRICTOR
15. COUNTERBALANCE VALVE
16. PORT RELIEF, Lift Cylinder 500 PSI (3448 kPa)
17. LOAD CHECK
18. MAIN RELIEF VALVE, 2450 PSI (16893 kPa)
19. MANIFOLD BLOCK
20. ORIFICE
21. HYDRAULIC CONTROL VALVE
22. SERVO-CONTROL VALVE
23. FLUID RESERVOIR, 11 gals. (45 L) Capacity: 7 gals. (26 L) Working Capacity
24. TEMPERATURE SWITCH, 220-232°F (104-111°C)
25. FILTER, 10 micron
26. FILTER BY-PASS, 30 PSI (207 kPa)
27. FILTER, #3 element
28. PRESSURE SWITCH (Differential), 19 PSI (131 kPa)
29. FILTER BY-PASS, 25 PSI (172 kPa)
30. OIL COOLER
31. HYDROSTATIC MOTOR

RED - - - - - - - High Pressure
BLUE - - - - - - Low Pressure
GREEN - - - - - Case Drain & Reservoir
ORANGE - - - -Charge Pressure

E-1425

Fig. 1—33 Hydraulic/Hydrostatic System

1—14.2 Checking and Adding Hydraulic/Hydrostatic Fluid

To check and/or add fluid, use the following procedure:

(1) Put the Bobcat Forklift on a level surface.

(2) Put the vertical mast fully down.

(3) Remove the dipstick and check the level of the fluid (Fig. 1—34, Item 1).

(4) If the level is below the bottom mark (Fig. 1—36), add the correct fluid (See Section 8 for the correct fluid), until the level of the fluid is at the top mark (Fig. 1—36).

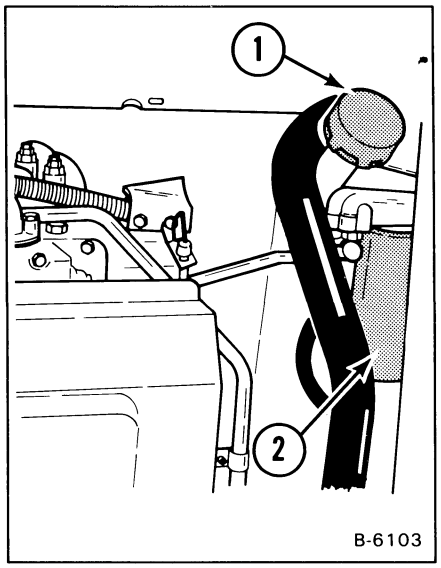

Fig. 1—34 Filter Location

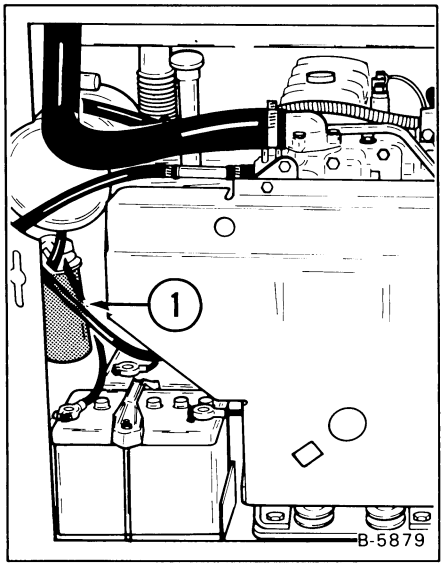

Fig. 1—35 Filter Location

1—14.3 Removing the Hydraulic/Hydrostatic Fluid

(1) Remove the drain plug (Fig. 1—37).

(2) Put a container under the reservoir (Fig. 1—38) and remove the fluid.

(3) When all the fluid is out, install the plug and tighten.

(4) Remove the oil fill cap/dipstick from the reservoir (Fig. 1—34, Item 1).

(5) Fill the reservoir to the top mark (Fig. 1—36) on the dipstick with the correct fluid (See Section 8 for the correct fluid).

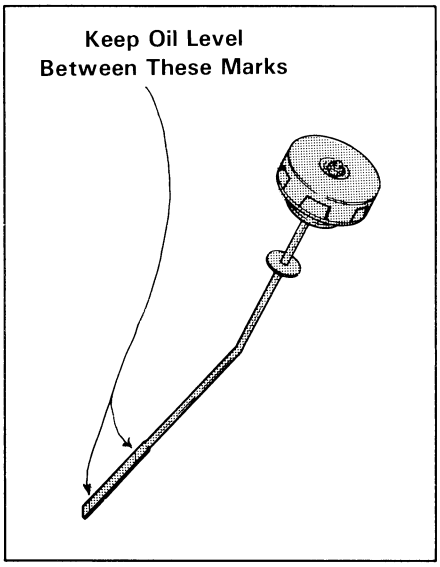

Fig. 1—36 Fluid Dipstick

1—14.4 Replacement of the Hydraulic/ Hydrostatic Filter

Replace the right hydraulic filter (10 Micron) every 100 hours of machine operation or more often if necessary. Replace the left hand filter (#3 Element) when the transmission light stays on for more than 5 minutes after cold start up.

To replace the hydraulic filters, use the following procedure:

(1) Clean the area around the filter housings.

(2) Remove the filter elements (Fig. 1—34, Item 2 & Fig. 1—35, Item 1) with a filter wrench.

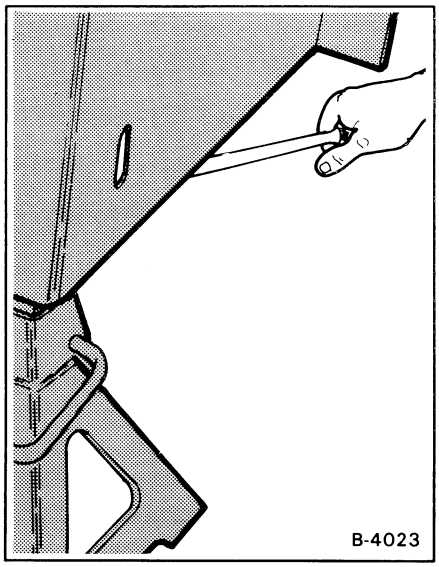

Fig. 1—37 Removing Drain Plug

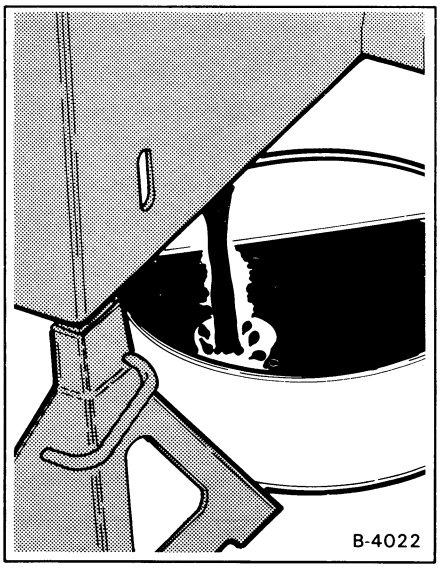

Fig. 1—48 Removing the Fluid

(3) Clean the surface of the filter housing head where the filter element makes contact with the filter housing.

(4) Lubricate the rubber gasket on the filter element with grease.

(5) Install the filter element. Tighten the filter elements by hand only.

(6) Check for leaks after you operate the machine.

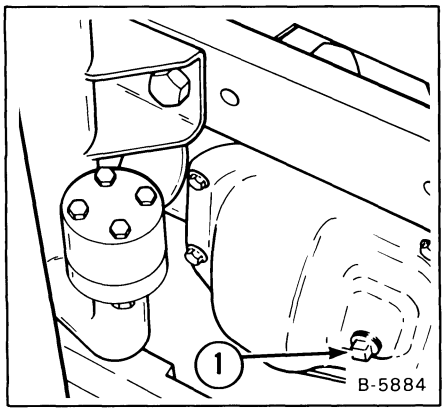

Fig. 1—39 Front Axle Check Plug

1—15 FRONT AND REAR AXLE

The final drive of the Bobcat Forklift is the front and rear axles.

The rear axle has a limited slip differential and the front axle has a standard differential.

NOTE: The rear axle must have limited slip additive (GM Part No. 1052358) added to the new oil when the oil is drained and replaced.

Check the oil level in the front and rear axle every 200 hours. When the level is low, put in SAE 90 weight oil.

To check the front and rear differential oil level, use the following procedure:

(1) Put the Bobcat Forklift on a level surface, lower the vertical mast and stop the engine.

(2) Remove the check plug on the covers of the axles (Fig. 1—39, Item 1 and Fig. 1—40, Item 1).

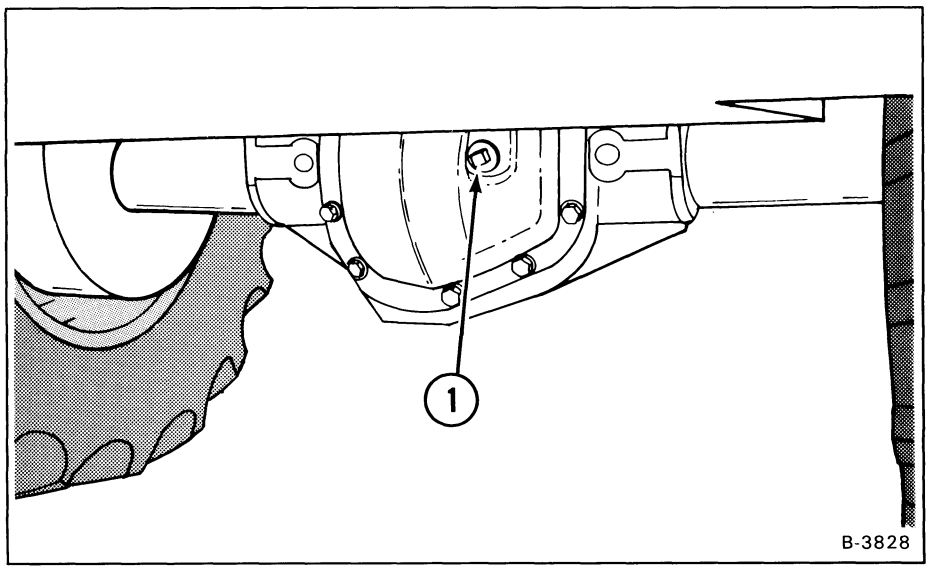

Fig. 1—40 Rear Axle Check Plug

(3) The oil must be at the check plug hole. If it is not, add the correct oil through the check plug hole until it flows from the check plug hole. Add limited slip additive (GM P/N 1052358) to the rear axle.

(4) Install the plug and tighten.

1—16 U-JOINTS

The drive shaft connects the two axles together. There is a U-joint at each end of the drive shaft (Fig. 1—41).

Lubricate the U-joints with high impact grease (Clark Part Number 6599719 or equivalent grease) every 100 hours (See the Parts Manual for the correct grease).

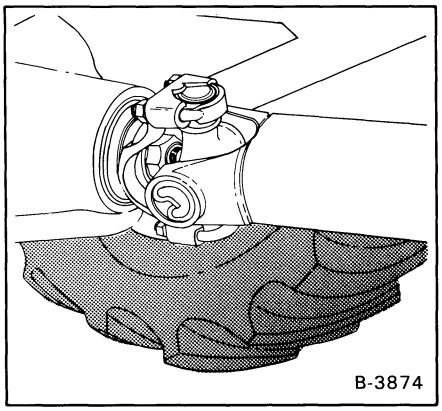

Fig. 1—41 U-Joint

Thank you very much for your reading.

Please Click Here Then Get More Information.