https://truckmanualshub.com/

Vibratory Roller
CC1000

Spare Parts Catalogue

4812160051

Valid from serial number:
***10000304**x0A012696 -*

Diesel engines:
Perkins 403D-11

Published catalogue issues valid for these rollers:

Catalogue	*Issue date*	*Valid for serial numbers*
4812160051	2013-12	***10000304**x0A012696 -*

We reserve the right to change specifications without notice.
Printed in Sweden.

https://truckmanualshub.com/

RESERVDELSBESTÄLLNING

Följande uppgifter ska lämnas vid beställning av reservdelar för att undvika leveransfel:

1. Maskintyp.
2. Vältens serienummer.
3. Antal av önskad reservdel.
4. Reserdelens artikelnummer.
5. Reservdelens benämning.
6. Måttuppgifter vid beställning av metervara.

ORDERING SPARE PARTS

To avoid errors in delivery, please give the following information when ordering spare parts:

1. Type of machine.
2. Roller serial number.
3. Quantity required.
4. Part number.
5. Parts denomination.
6. Dimensions when ordering per length.

ERSATZTEILBESTELLUNG

Zur Vermeidung von Fehllieferungen sind bei der Bestellung von Ersatzteilen folgende Angaben zu machen:

1. Maschinentyp.
2. Herstellungsnummer.
3. Bestellmenge. (Quantity)
4. Ersatzteilnummer. (Part Nº)
5. Ersatzteilbenennung. (Denomination)
6. Massangaben bei Bestellung von Meterware.

ORDINI DI RICAMBI

Per evitare errori nelle consegne di ricambi, Vi preghiamo di comunicarci le seguenti informazioni al momento dell 'ordinazione:

1. Tipo di macchina.
2. Numero di serie della macchina.
3. Quantità dei pezzi desiderati. (Quantity)
4. Numero di codice del pezzo. (Part Nº)
5. Descrizione del pezzo di ricambio. (Denomination)
6. Misura, in caso di ordine per metro.

PEDIDO DE RECAMBIOS

Para evitar errores en las entregas, deberán indicarse los siguientes datos al hacer un pedido de recambios:

1. Tipo de máquina.
2. Número de serie.
3. Cantidad de piezas deseadas. (Quantity)
4. Número de artículo de la pieza de recambio. (Part Nº)
5. Denominación de la pieza. (Denomination)
6. Indíquese la medida al solicitar un artículo que se expide por metros.

COMMANDE DE PIECES DE RECHANGE

Les indications suivantes doivent être fournies lors de la commande de piéces de rechange, afin d'éviter toute erreur de livraison:

1. Type de machine.
2. Numéro de série.
3. Quantité désirée de pièce de rechange. (Quantity)
4. Numéro de la piéce de rechange. (Part Nº)
5. Dénomination de la piéce de rechange. (Denomination)
6. Longueur en cas de commande au mètre.

YOUR AGENT/DEALER:

https://truckmanualshub.com/

Text pages

The text pages is structured as the picture on the right.

1. This is the remarks for specific items and the descriptions of the remarks is at the bottom of the parts list.

2. Parts indicated by a dot and moved to the right are included when buying the assembled unit above.

3. Spare parts Class code for a specific part.
"A" = 3 or more units/year,
"B" = 2 or more units/year,
"C" = 1 or more units/year,
"D" = at least 1 unit/year.

DYNAPAC
Part of the Atlas Copco Group

Dynapac Compaction Equipment AB

Engine cover, left

Item	Part No	Rem	Qty	Description	Code
	4700396684		1	Engine cover, cpl	
1			1	. Cover	
2	4700396607		1	. Lock	
	4700902866		1	. . Key Marked "455"	A
3	4700624020		4	. Blind rivet	
4	4700379976		1	. Cover	
5	4700792325		10	. Blind rivet	
7	4700202057	B	1XL	. Edge trim	D
8	4700902166	C	1XL	. Edge trim	D
9	4700903953	D	1XL	. Edge trim	D
11	4700390365		1	. Spacer	
12	4700924875		2	. Screw	
13	4700904228		2	. Washer 6,4x12x1,5	C
14	4700586002		2	. Lock nut M6 -8	C
15	4700390545		1	. Strap	
16	4700904735		1	. Washer	C
17	4700500059		1	. Screw	

B) L=0.625m
C) L=0.6m
D) L=1.2m

Changes

PARTS INFO	SERVICE INFO	GROUP	PAGE	NOTES

Notes

https://truckmanualshub.com/

Notes

https://truckmanualshub.com/

TABLE OF CONTENTS

Page

CC1000 S/N 10000304x 0A012696 - **2**

Service kits **4**

4700940208 Service kit, Perkins 50h 6
4700940209 Service kit, Perkins 500h 8
4700940210 Service kit, Perkins 1000h 10

Repair kits **12**

4700945552 Shock absorber kit, drum 14
4700940673 Scraper blade, kit CC1000 16
4700945928 Repair kit, Steering hitch 18
4700945710 Eccentric shaft kit 20
4700945711 Drum rotation kit 22

Frame **24**

Frames 26
4700377621 Hitch 28
Scrapers 30
Engine hood 32
Sprinkler system 34

Drum **36**

Drum 38

Engine **40**

Engine Perkins 403D-11 42
Cooling system 44
Exhaust system 46
Fuel system 48
Air intake system 50

Hydraulic system **52**

Hydraulic propulsion and brake system motor 54
4700387270 Hydraulic motor 56
Hydraulic propulsion and brake system pump 58
Hydraulic vibration 60
4700390316 Hydraulic motor 62
4700395520 Hydraulic pump 64
Hydraulic steering 66
4700387274 Steering valve 68
4700387275 Hydraulic cylinder 70

Electrical equipment **72**

Electrical equipment 74
Control panel, relays 76

Page

TABLE OF CONTENTS

Driving lights Option 78
Working lights Option 80
Rotating beacon with Rops Option 82
Back-up alarm 84

Drivers platform 86

Drivers seat 88
F/R- and throttle control 90
4812113676 Forward and reverse control handle 92
Dual forward/reverse control Option 94
Rops Option 96
377256 Cup holder Option 98

Decals and documentation 100

Decals and documentation 102

Standard equipment 104

Standard equipment 106

Optional equipment 108

Battery disconnector 110
Water tank, option 112
SMV-sign 114
SMV-sign Mounting on watertank 116
SMV-sign on high water tank 118
Registrations - plate with light 120
Hydraulic vibration, shut off front/rear drum 122
4700387276 Combination valve 124
Rear view mirror 126
Tool equipment 128

https://truckmanualshub.com/

CC1000 S/N 10000304x 0A012696 -

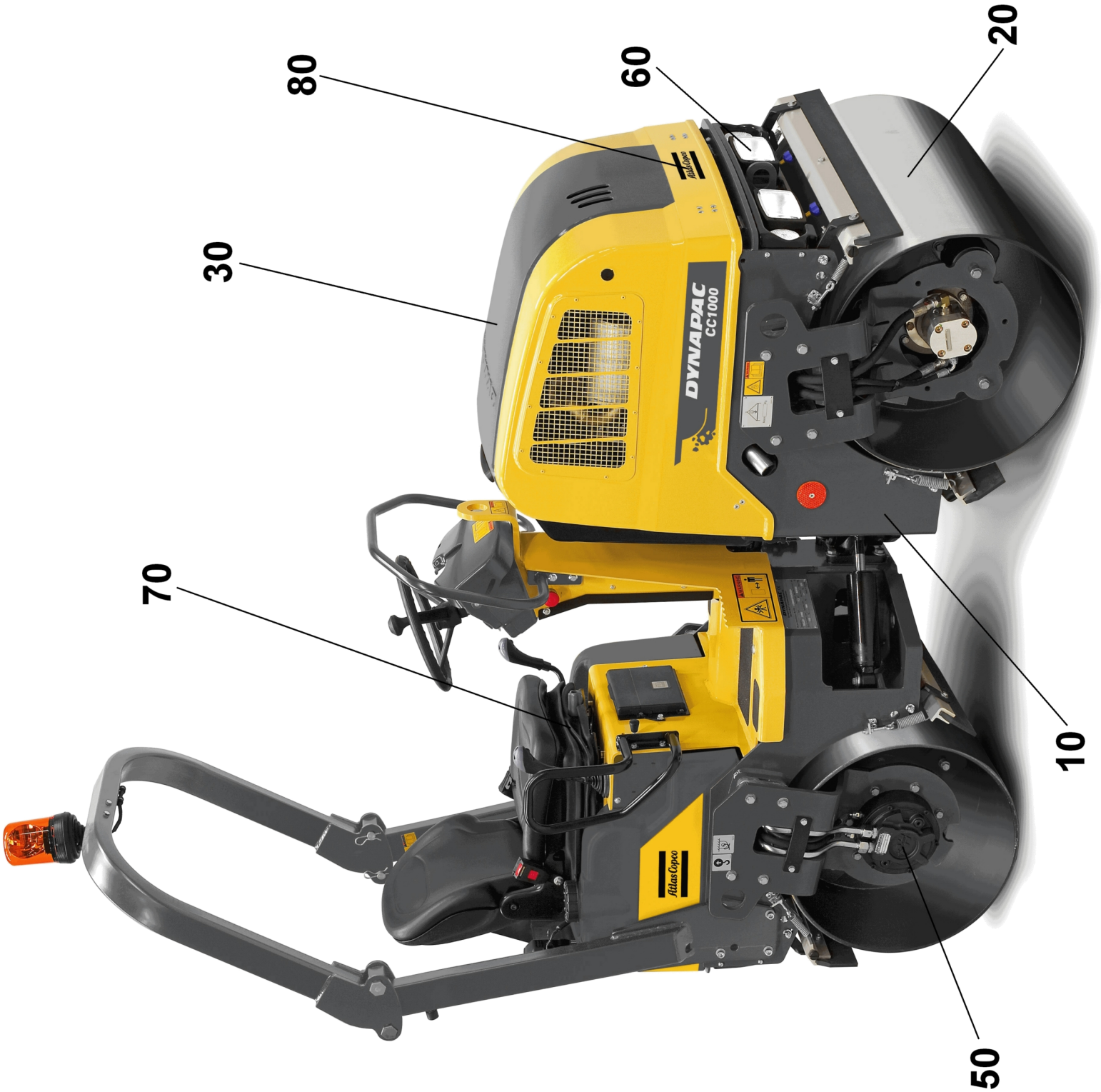

CC1000 S/N 10000304x 0A012696 -

Item	Part No	Rem	Qty	Description	Code
5				Service kits (Page 4)	
6				Repair kits (Page 12)	
10				Frame (Page 24)	
20				Drum (Page 36)	
30				Engine (Page 40)	
50				Hydraulic system (Page 52)	
60				Electrical equipment (Page 72)	
70				Drivers platform (Page 86)	
80				Decals and documentation (Page 100)	
90				Standard equipment (Page 104)	
91				Optional equipment (Page 108)	

Service kits

Service kits

Item	Part No	Rem Qty	Description	Code
1	4700940208		**Service kit, Perkins 50h (Page 6)**	
2	4700940209		**Service kit, Perkins 500h (Page 8)**	
3	4700940210		**Service kit, Perkins 1000h (Page 10)**	

4700940208 Service kit, Perkins 50h

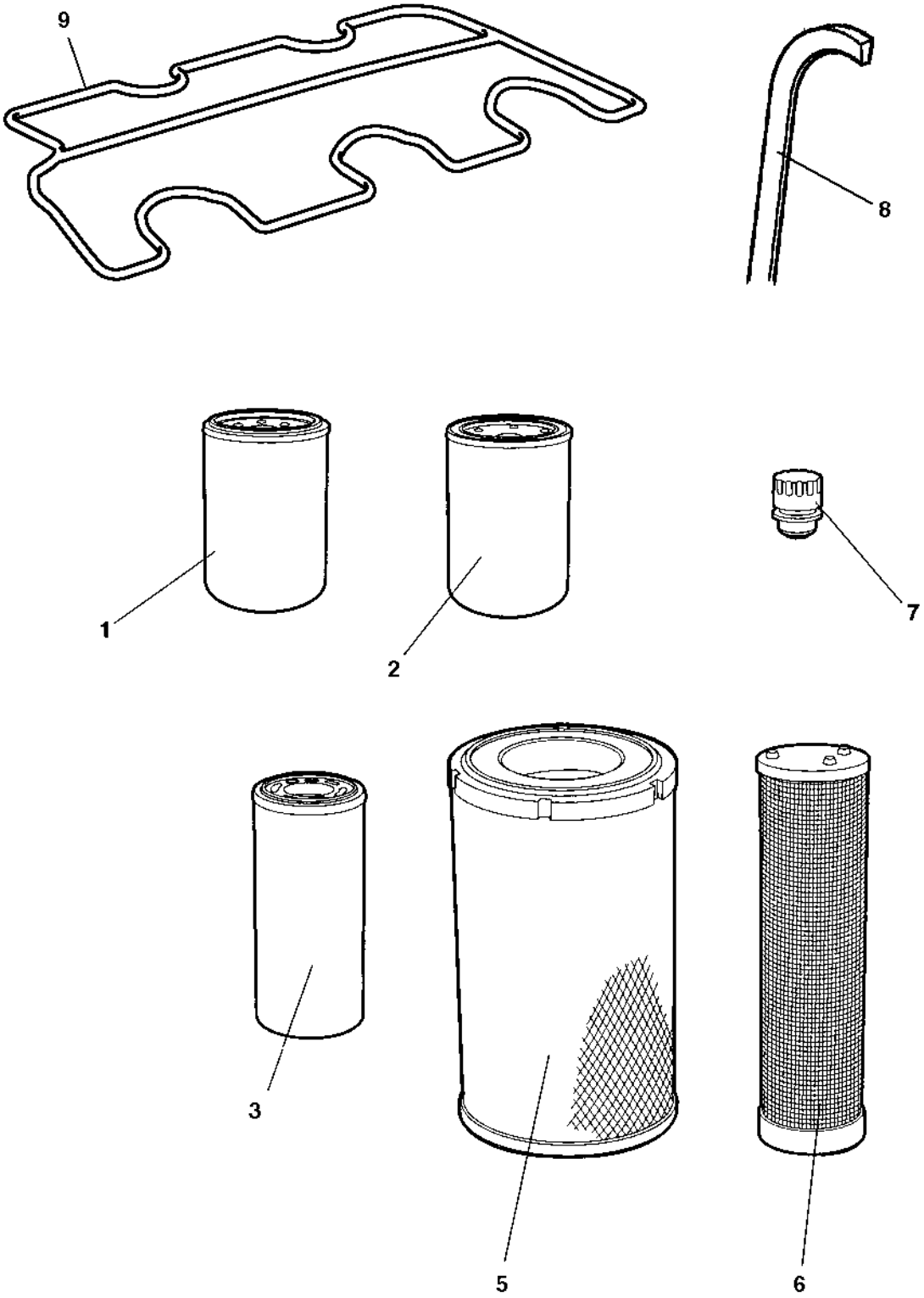

4700940208 Service kit, Perkins 50h

Item	Part No	Rem	Qty	Description	Code
	4700940208			**Service kit, Perkins 50h (Page 6)**	
1	4700376554		1	Oil filter	A
2	4700376555		1	Fuel filter	A
3	4700376637		1	Hydraulic filter element	A

4700940209 Service kit, Perkins 500h

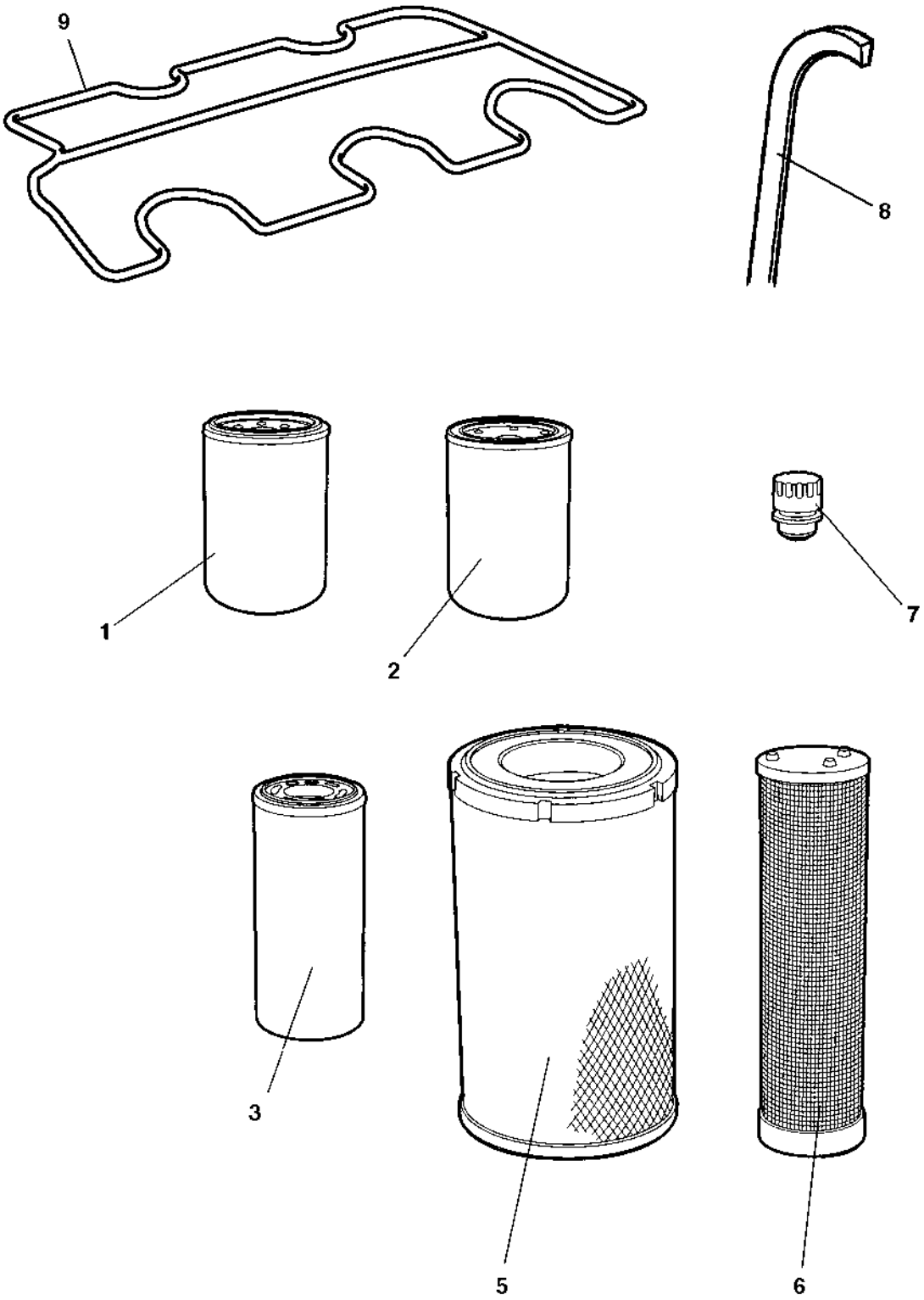

4700940209 Service kit, Perkins 500h

Item	Part No	Rem	Qty	Description	Code
	4700940209			**Service kit, Perkins 500h (Page 8)**	
1	4700376554		1	Oil filter	A
2	4700376555		1	Fuel filter	A
5	4700939802		1	Air filter element Main	A
6	4700939803		1	Air filter element Safety	A
7	4700357138		1	Ventilating filter	

4700940210 Service kit, Perkins 1000h

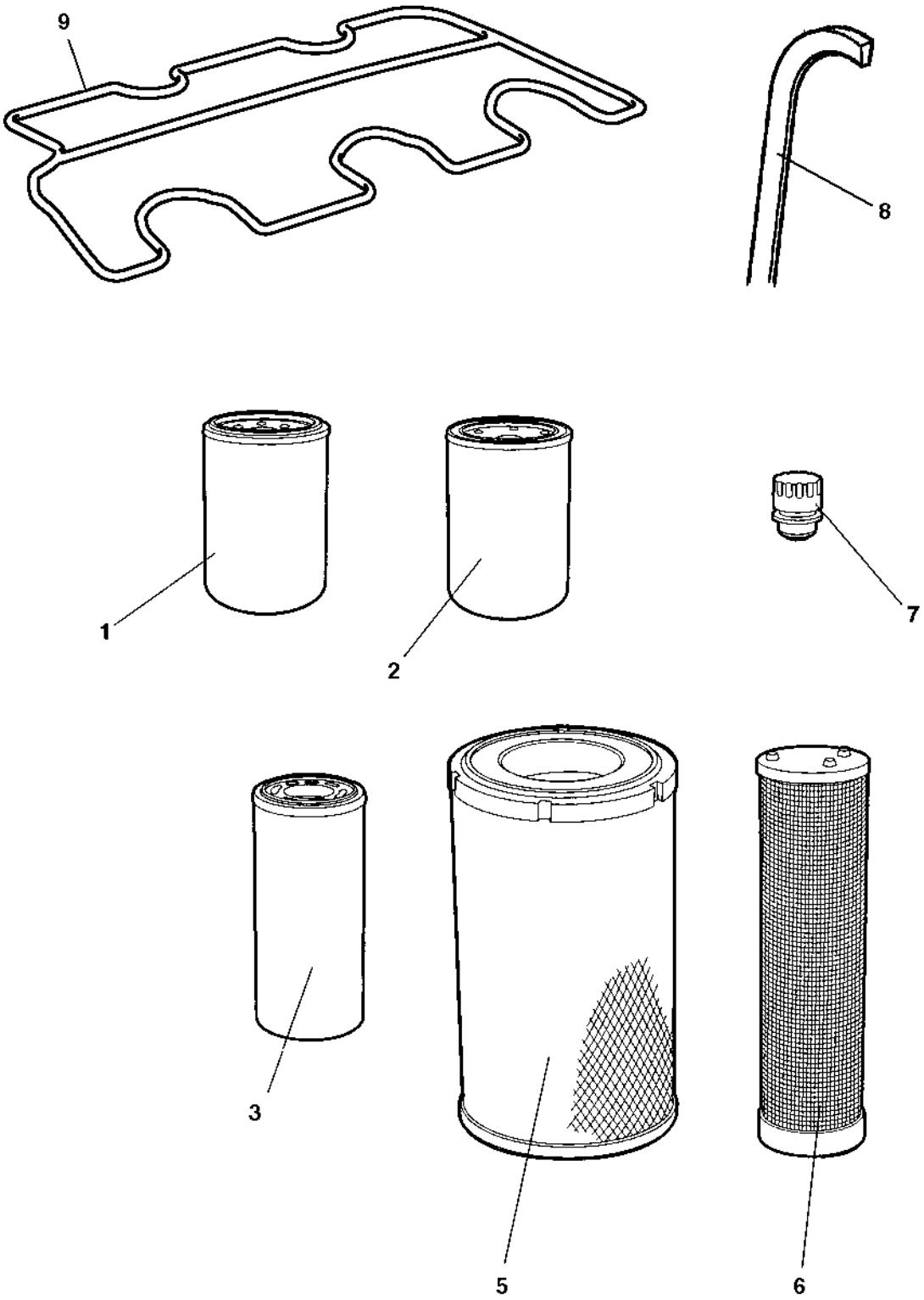

4700940210 Service kit, Perkins 1000h

Item	Part No	Rem	Qty	Description	Code
	4700940210			**Service kit, Perkins 1000h (Page 10)**	
1	4700376554		1	Oil filter	A
2	4700376555		1	Fuel filter	A
3	4700376637		1	Hydraulic filter element	A
5	4700939802		1	Air filter element Main	A
6	4700939803		1	Air filter element Safety	A
7	4700357138		1	Ventilating filter	
8	4700939932		1	V-belt	A
9	4700940212		1	Valve gasket	D

Repair kits

Repair kits

Item	Part No	Rem	Qty	Description	Code
11	4700945552		2	**Shock absorber kit, drum (Page 14)**	
12	4700940673		1	**Scraper blade, kit CC1000 (Page 16)**	
13	4700945928		1	**Repair kit, Steering hitch (Page 18)**	
14	4700945710		2	**Eccentric shaft kit (Page 20)**	
15	4700945711		2	**Drum rotation kit (Page 22)**	

4700945552 Shock absorber kit, drum

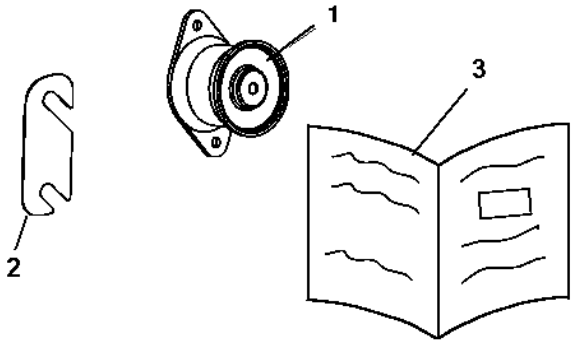

4700945552 Shock absorber kit, drum

Item	Part No	Rem	Qty	Description	Code
	4700945552			**Shock absorber kit, drum (Page 14)**	
1	4700391984		7	Shock absorber	D
2	4700387424		4	Shim	D
3	4812156170		1	Instructions	

4700940673 Scraper blade, kit CC1000

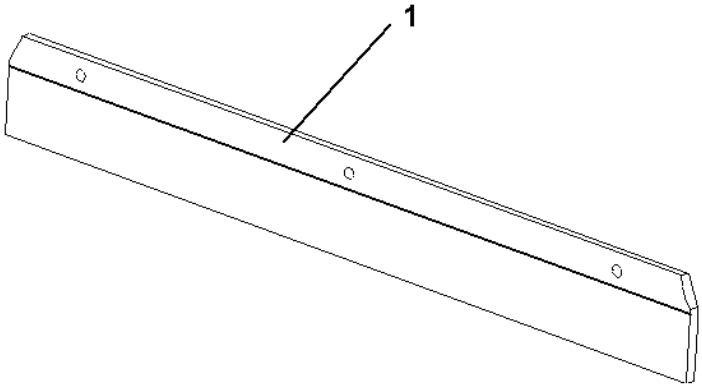

4700940673 Scraper blade, kit CC1000

Item	Part No	Rem	Qty	Description	Code
	4700940673			**Scraper blade, kit CC1000 (Page 16)**	
1	4700387350		4	Scraper blade	B

4700945928 Repair kit, Steering hitch

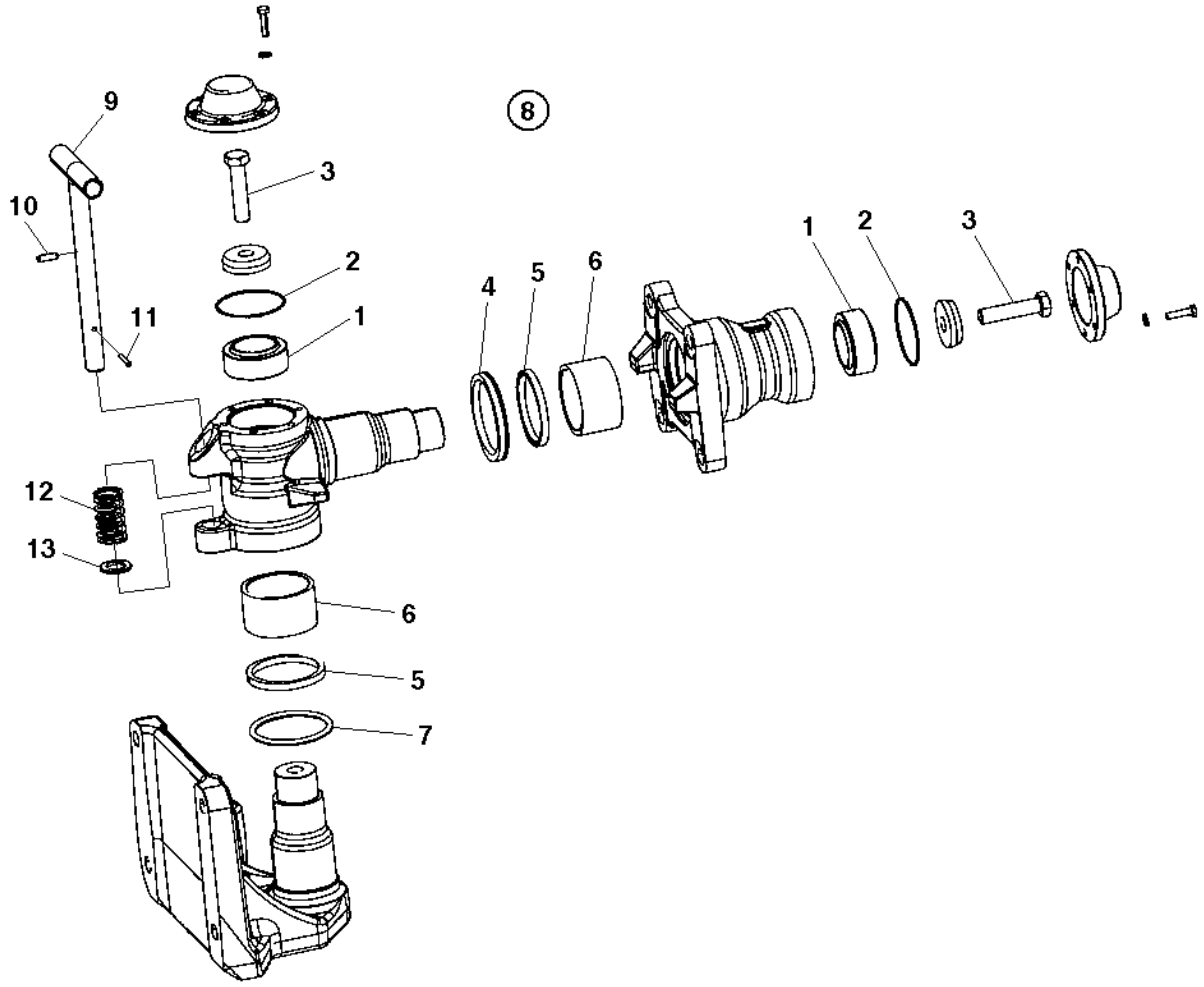

4700945928 Repair kit, Steering hitch

Item	Part No	Rem	Qty	Description	Code
	4700945928			**Repair kit, Steering hitch (Page 18)**	
1	4700792611		2	Radial spherical plain bearing	D
2	4700791962		2	O-ring	D
3	4700500050		2	Screw	D
4	4700388171		1	Sealing, v-ring	D
5	4700388173		2	Shear wiper	D
6	4700388172		2	Bushing	D
7	4700160058		1	O-ring	C

4700945710 Eccentric shaft kit

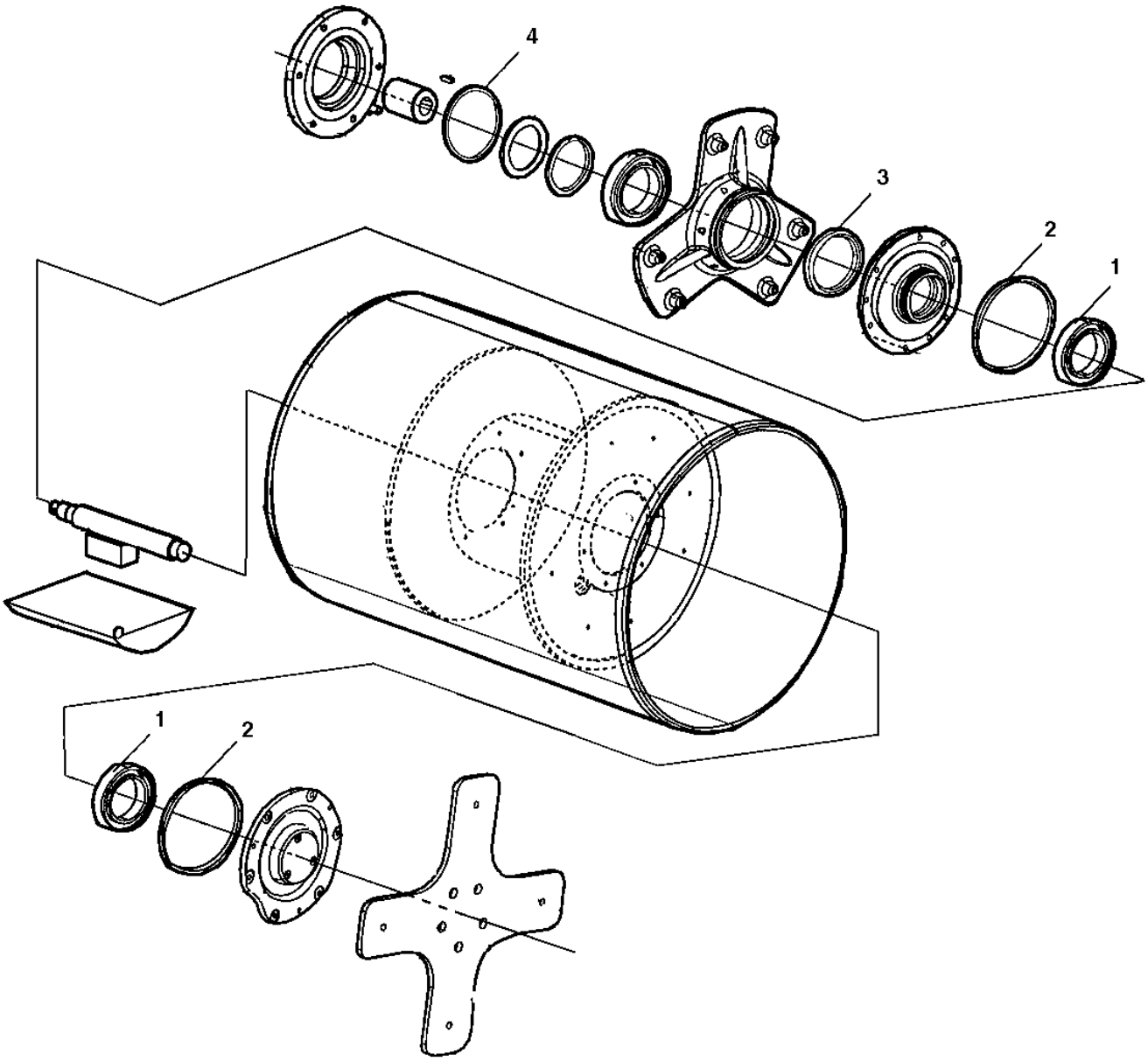

4700945710 Eccentric shaft kit

Item	Part No	Rem	Qty	Description	Code
	4700945710			**Eccentric shaft kit (Page 20)**	
1	4700791433		2	Spherical roller bearing	B
2	4700791425		2	O-ring 174, 20x5, 70	D
3	4700791426		1	Radial lip seal	D
4	4700160132		1	O-ring 124, 50x3, 00	

4700945711 Drum rotation kit

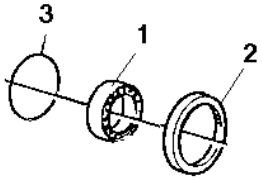

4700945711 Drum rotation kit

Item	Part No	Rem	Qty	Description	Code
	4700945711			**Drum rotation kit (Page 22)**	
1	4700111018		1	Ball bearing	D
2	4700791426		1	Radial lip seal	D
3	4700160132		1	O-ring 124, 50x3, 00	

Frame

Frame

Item	Part No	Rem	Qty	Description	Code
15				**Frames (Page 26)**	
30				**Scrapers (Page 30)**	
40				**Engine hood (Page 32)**	
51				**Sprinkler system (Page 34)**	

Frames

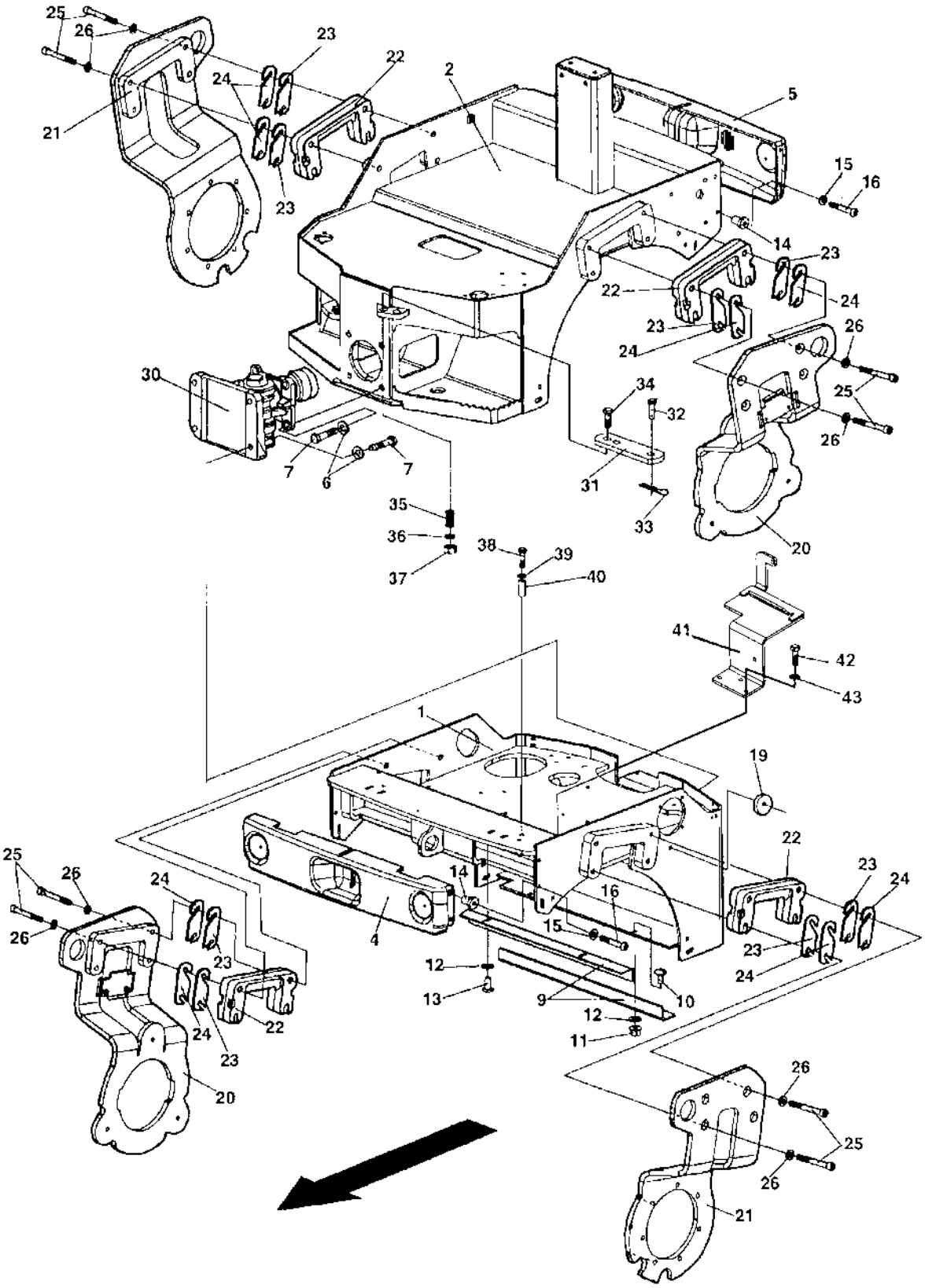
25
26
23
22
2
24
21
5
15
16
23
14
23
22
24
23
24
26
30
34
32
25
26
7
6
7
31
33
35
36
37
38
39
40
20
41
42
43
1
19
22
23
24
25
26
24
14
16
26
15
4
23
12
13
9
10
23
24
12
11
24
22
23
20
26
25
26
21

Frames

Item	Part No	Rem	Qty	Description	Code
1	4700387055		1	Frame, front	D
2	4700387056		1	Frame, rear	D
4	4700387376		1	Cover, frame	D
5	4700387886		1	Cover, frame	D
6	4700904214		8	Washer 15x30x4 300 HV	
7	4700500176		8	Screw M14x060	D
9	4700387779		2	Press plate	D
10	4700929191		2	Bolt	D
11	4700902286		2	Hexagon lock nut with flange	C
12	4700904556		4	Washer 8,4x16x3,0	C
13	4700500053		2	Screw M8x20H 8.8	
14	4700387949		8	Rubber nut	D
15	4700904228		8	Steel plain washer 6,4x12x1,5	
16	4700791559		8	Screw M06x35	D
19		A	1	Reflector	
20	4700388850		2	Fork, vibration side	D
21	4700388849		2	Fork, drive side	D
22	4700388153		8	Spacer	D
23	4700387425		N	Shim	D
24	4700387424		N	Shim	D
25	4700791973		16	Screw M12x150	D
26	4700904231		16	Washer 13x24x2 300 HV	
30	4700377621		1	**Hitch (Page 28)**	
31	4700377610		1	Lock link	D
32	4700530027		1	Clevis pin	D
33	4700635061		1	Hair clip	B
34	4700500208		1	Screw M20x80	D
35	4700349332		1	Pressure spring	D
36	4700904233		1	Washer 21x36x3	
37	4700586022		1	Lock nut M20-8	C
38	4700500067		1	Screw M8-1,25x55 8,8	C
39	4700904229		1	Steel plain washer 8,4x16x1,5	
40	4700387677		1	Spacer sleeve	C
41		C	1	Battery shelf	
42		C	3	Screw	
43		C	3	Washer	

A) See section Hitch
C) See section "Electrical equipment"

4700377621 Hitch

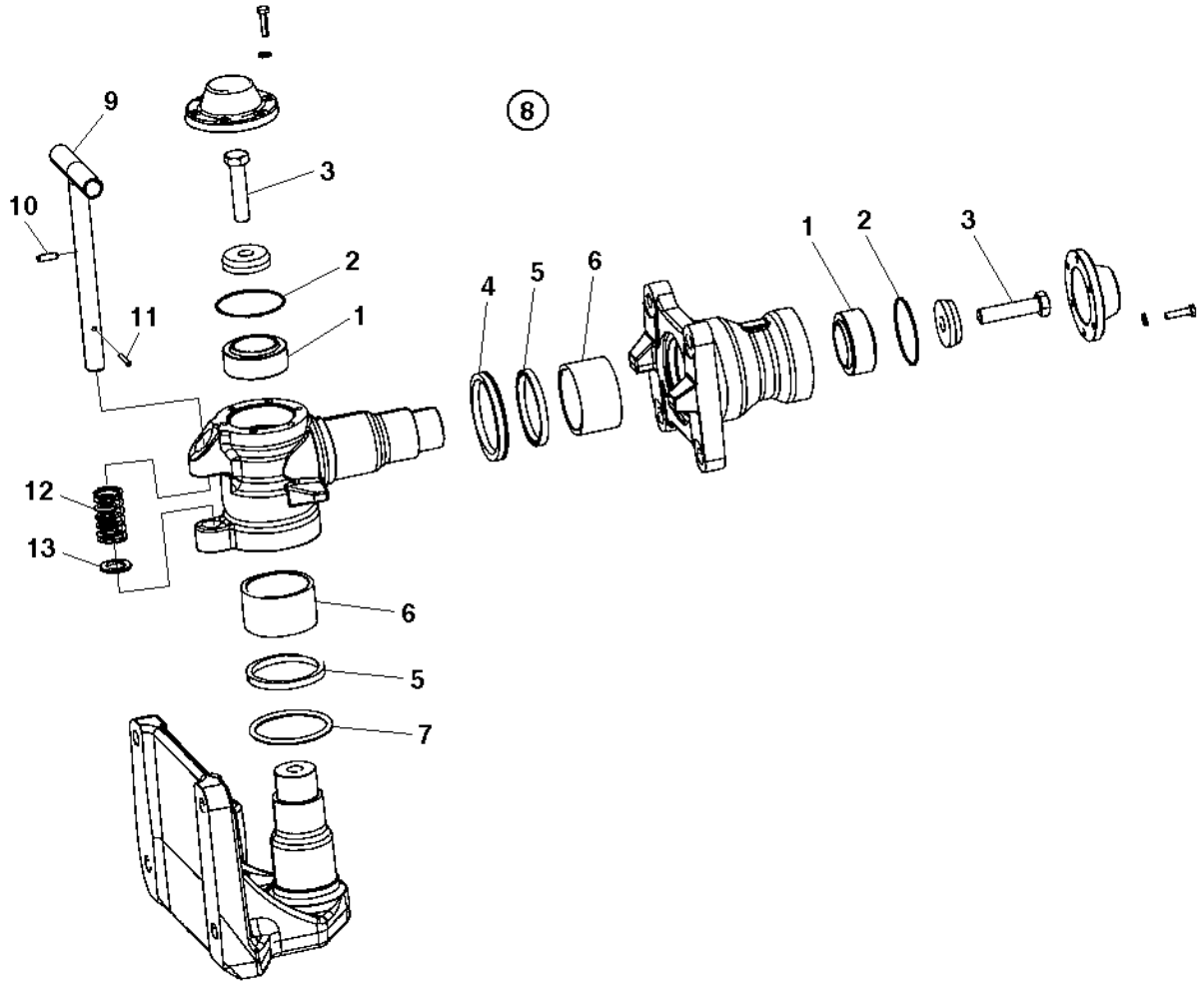

4700377621 Hitch

Item	Part No	Rem	Qty	Description	Code
1	4700792611		2	Radial spherical plain bearing	D
2	4700791962		2	O-ring	D
3	4700500050		2	Screw	D
4	4700388171		1	Sealing, v-ring	D
5	4700388173		2	Shear wiper	D
6	4700388172		2	Bushing	D
7	4700160058		1	O-ring	C
8	4700945928		1	**Repair kit, Steering hitch (Page 18)**	
9				Not used on this model	
10				Not used on this model	
11				Not used on this model	
12				Not used on this model	
13				Not used on this model	

Scrapers

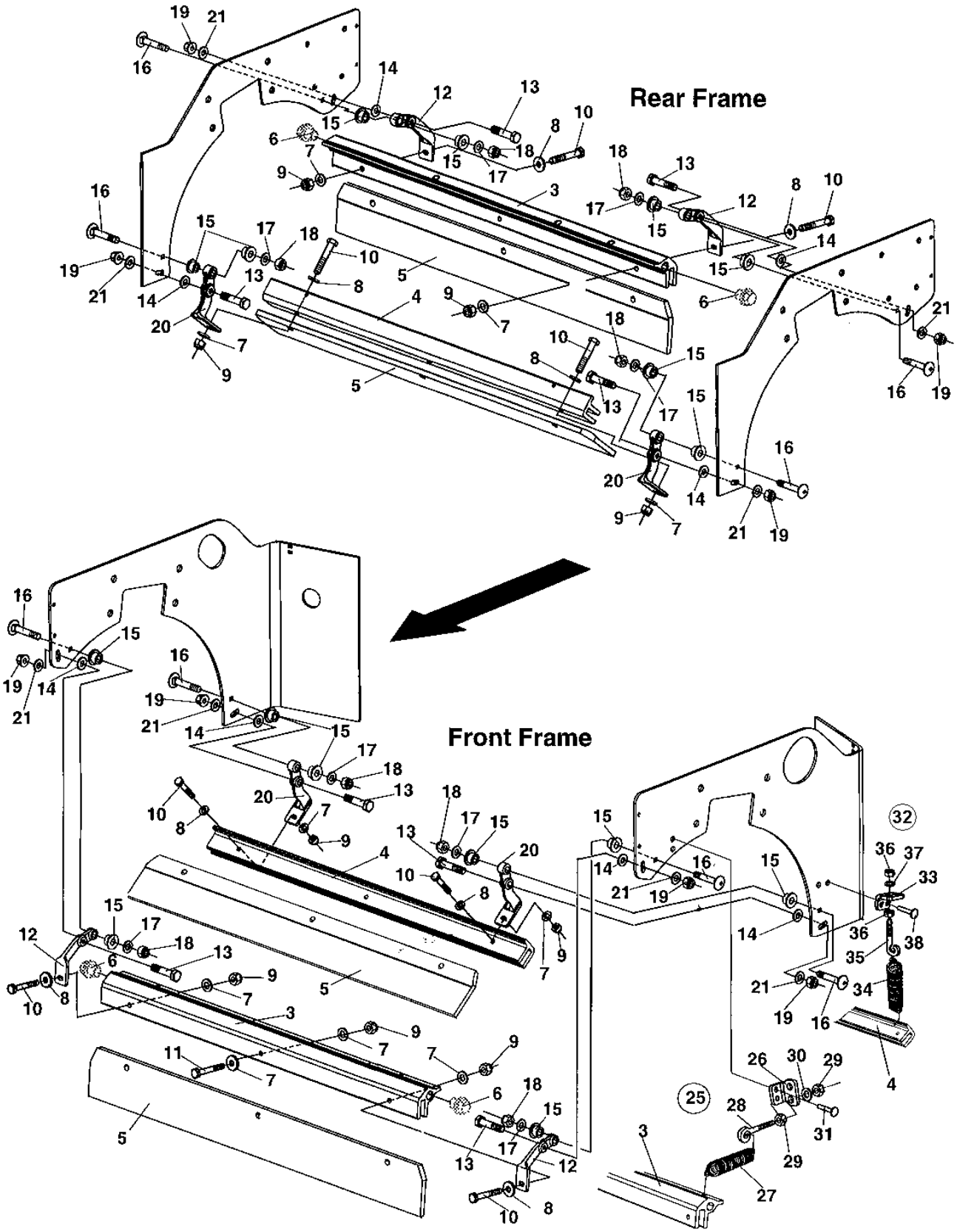

Scrapers

Item	Part No	Rem	Qty	Description	Code
3	4700387348		2	Sprinkler pipe	C
4	4700387349		2	Hold	D
5	4700387350		4	Scraper blade	B
6	4700792072		4	End plug	
7	4700904229		16	Steel plain washer 8,4x16x1,5	
8	4700904640		8	Washer 8,4x22x3	C
9	4700586003		12	Lock nut M8	
10	4700500067		8	Screw M8-1,25x55 8,8	C
11	4700500024	A	4	Screw M8x45	D
12	4700387039		4	Upper hold	D
13	4700500105		8	Hexagon screw M10x50	D
14	4700791938		8	Washer	C
15	4700791939		16	Bushing	D
16	4700791775		8	Bolt	C
17	4700904229		8	Steel plain washer 8,4x16x1,5	
18	4700586003		8	Lock nut M8	
19	4700586018		8	Hexagon lock nut M10	C
20	4700387043		4	Lower hold	D
21	4700791938		8	Washer	C
25		B,C	2	Spring loaded scraper	
26	4700378178	B	4	Bracket	D
27	4700359043	B	2	Spring	D
28	4700792189	B	4	Eye bolt	D
29	4700570005	B	8	Nut M8	C
30	4700904229	B	4	Steel plain washer 8,4x16x1,5	
31	4700792180	B	16	Blind rivet	D
32		B,D	2	Spring loaded scraper	
33	4700378178	B	4	Bracket	D
34	4700792188	B	2	Extension spring	D
35	4700792189	B	4	Eye bolt	D
36	4700570005	B	8	Nut M8	C
37	4700904229	B	4	Steel plain washer 8,4x16x1,5	
38	4700792180	B	16	Blind rivet	D

A) Valid for all scrapers
B) Option
C) Used on front and rear drum together with Sprinkler pipe PN 4700387348
D) Used on front and rear drum together with Holder 4700387349

Engine hood

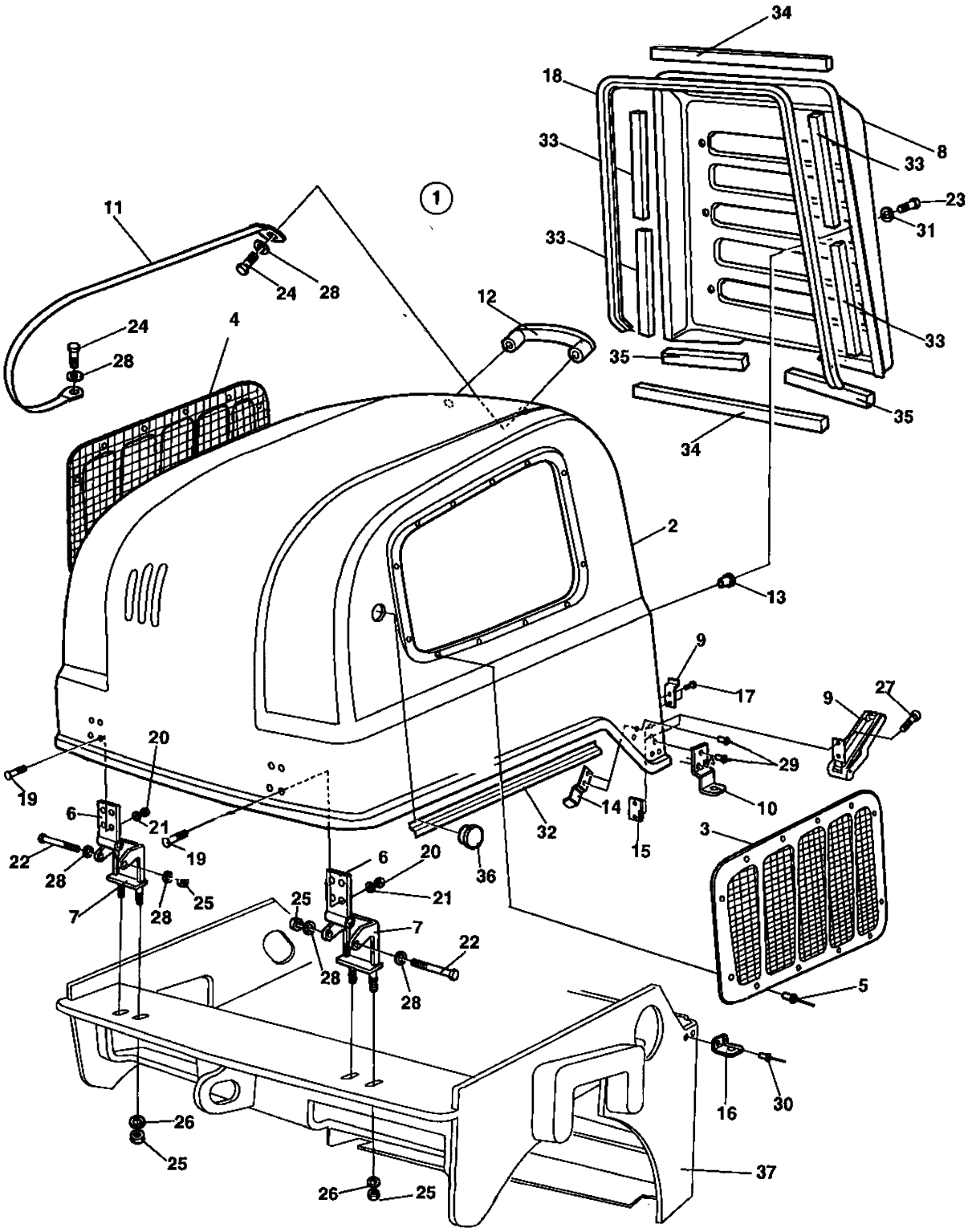
34
18
33
8
33
23
31
1
11
33
24
28
12
24
4
28
33
35
35
34
2
13
9
17
9
27
20
29
19
6
21
14
10
32
15
3
22
19
6
20
36
28
25
21
7
28
25
7
22
28
28
5
16
30
26
25
37
26
25

Engine hood

Item	Part No	Rem	Qty	Description	Code
1	4812120570		1	Engine hood	D
2			1	. Engine hood	
3	4812120592		1	. Grid	D
4	4700377044		1	. Grid, right	D
5	4700904012		24	. Rivet	
6	4700387148		2	Hinge	D
7	4700387151		2	Hinge	D
8	4700387154		1	Cover, radiator	D
9	4700388846		2	Latch	D
10	4700377061		1	Lock plate	D
11	4700387947		1	Metal strapping	D
12	4700387948		1	Handle	D
13	4700387949		6	Rubber nut	D
14	4700388733		2	Controlling plate	D
15	4700387956		1	Stop plate	
16	4700388852		1	Lock plate	D
17	4700791643		4	Screw	C
18	4700902166	A	1	Edge trim	
19	4700903856		8	Bolt M06x30	C
20	4700586002		8	Lock nut M6 -8	
21	4700904228		8	Steel plain washer 6,4x12x1,5	
22	4700500068		2	Screw M08x65	C
23	4700791559		6	Screw M06x35	D
24	4700500053		3	Screw M8x20H 8.8	
25	4700586003		6	Lock nut M8	
26	4700904556		4	Washer 8,4x16x3,0	C
27	4700508022		4	Screw M4x16	
28	4700904229		7	Steel plain washer 8,4x16x1,5	
29	4700791754		7	Blind rivet	
30	4700792180		2	Blind rivet	D
31	4700928381		6	Washer 6,4x18x1,6	C
32	4700297018	B	2	Rubber strip	
33	4700791597	C	4	Rubber strip	
34	4700791597	D	2	Rubber strip	
35	4700791597	E	2	Rubber strip	
36	4700902890		2	Plug	
37			1	See sections "Frames"	

A) L = 1620 mm
B) L = 450 mm
C) L = 125 mm
D) L = 420 mm
E) L = 170 mm

Sprinkler system

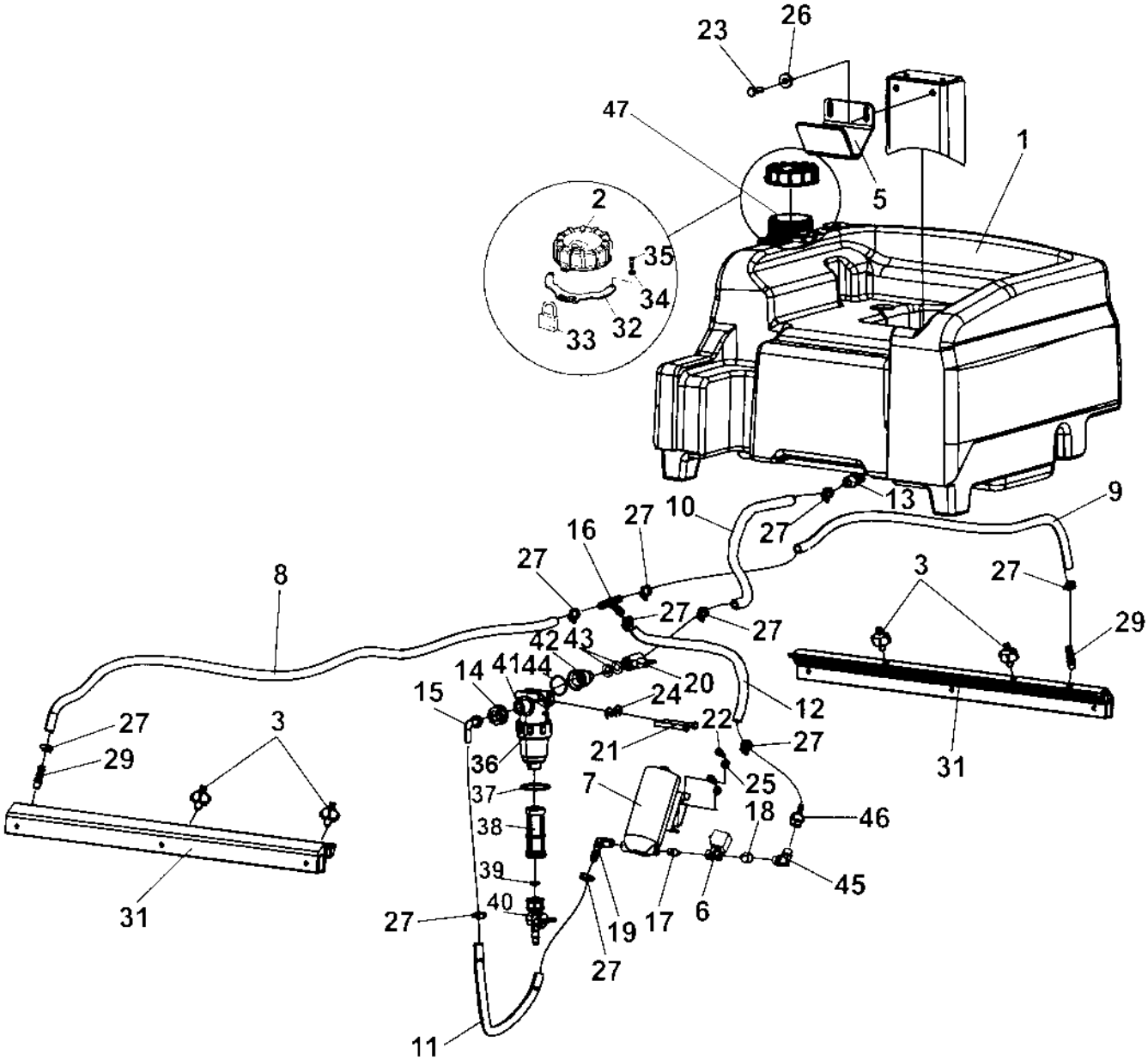

Sprinkler system

Item	Part No	Rem	Qty	Description	Code
1	4700389218		1	Water tank, cpl	D
2	4700388087		1	Tank cap	D
3	4700392011		4	Spraying nozzle, cpl	A
	4700392508		1	. Housing	D
	4700392509		1	. Retainer, nozzle, strainer, yellow 0.8	D
	4700376876		1	. Gasket	D
5	4700387935		1	Bracket	D
6	4700287713		1	Solenoid valve	B
7	4812113822		1	Water pump	C
8	4812112074	A	1	Plastic hose	
9	4812112074	B	1	Plastic hose	
10	4812112074	C	1	Plastic hose	
11	4812112074	D	1	Plastic hose	
12	4812112074	E	1	Plastic hose	
13	4700924544		2	Hose connection	C
14	4700792779		1	Swivel nut	
15	4812111330		1	Hose connection swivel	C
16	4700923735		1	Hose connection	C
17	4700377611		1	Straight connector	C
18	4812112645		1	Hose connection	
19	4700923734		1	Hose connection	B
20	4700925599		1	Ball valve	C
21	4700500090		2	Screw	C
22	4700508004		4	Socket head cap screw M8-1,25x12H 8.8	D
23	4700500029		2	Hexagon head screw	
24	4700904640		2	Washer 8,4x22x3	C
25	4700904556		4	Washer 8,4x16x3,0	C
26	4700904567		2	Washer 10,5x28x6 HB305	
27	4700313002		10	Hose clamp 13-20 mm	
29	4700791977		2	Hose connection	B
31		F	2	Sprinkler pipe	
32	4700389155	G	1	Lock bracket	D
33	4700358881	G	1	Pad lock	
34	4700904281	G	2	Washer 5,3x10x1 300HV	C
35	4700903658	G	2	Screw M5x10	C
36	4812111325		1	Water strainer, cpl	B
37	4700791959		1	. O-ring	C
38	4700791949		1	. Filter element	A
39	4700791568		1	. Gasket	
40	4700379009		1	. Valve	
41	4700480852		1	O-ring 70	
42	4812111331		1	Reducer nipple	
43	4700379753		4	Gasket	
44	4700160313		1	O-ring 70	
45	4700901298		1	Connector	C
46	4700901297		1	Hose connection	C
47	4700358846		1	Strainer	A

A) L = 1565 mm
B) L = 835 mm
C) L = 520 mm
D) L = 410 mm
E) L = 440 mm
F) See section "Scraper"
G) Option

Drum

Drum

Item	Part No	Rem	Qty	Description	Code
10				**Drum (Page 38)**	

Drum

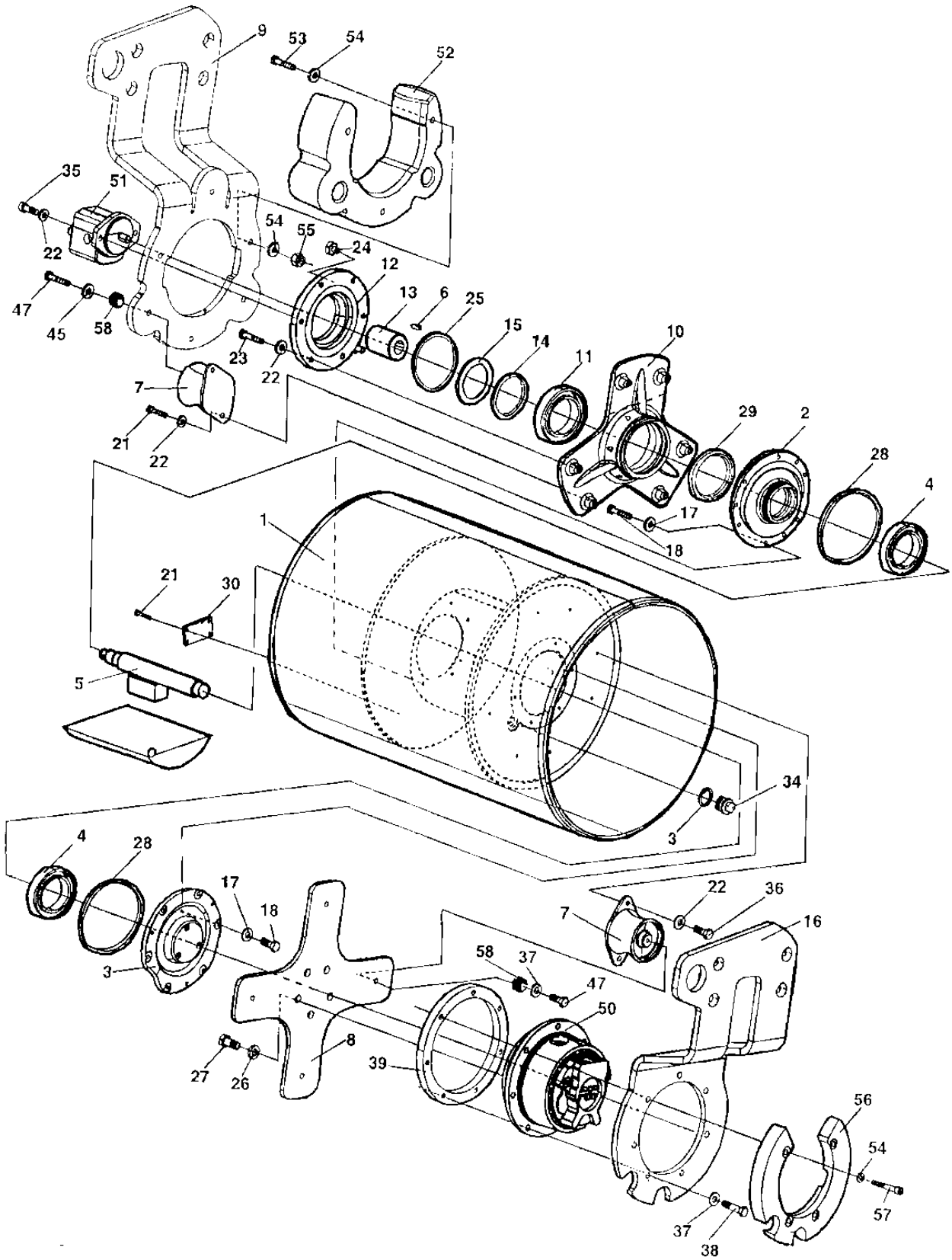
9
53
54
52
35
51
22
54
55
24
12
47
45
58
13
6
25
15
14
10
11
23
22
7
21
22
29
2
28
4
17
18
1
21
30
5
34
3
4
28
17
18
3
22
36
7
16
58
37
47
50
8
39
27
26
56
54
57
37
38

Drum

Item	Part No	Rem	Qty	Description	Code
1	4700386867		1	Drum	D
2	4700386619		1	Bearing housing	D
3	4700386620		1	Bearing housing	D
4	4700791433		2	Spherical roller bearing	B
5	4700386627		1	Eccentric shaft	D
6	4700350029		1	Key	
7	4700391984		7	Shock absorber	D
8	4700386622		1	Drive disc	D
9		A	1	Fork, vibration side	
10	4700386241		1	Bearing housing	D
11	4700111018		1	Ball bearing	D
12	4700358666		1	Adapter	C
13	4700349202		1	Coupling	D
14	4700358689		1	Spacer ring	C
15	4700903154		1	Retaining ring	
16		A	1	Fork, drive side	
17	4700904640		12	Washer 8,4x22x3	C
18	4700500022		12	Screw M8x30H 8.8	C
19	4700904228		3	Steel plain washer 6,4x12x1,5	
20	4700500012		3	Screw M6x12	C
21	4812110596		6	Hexagon head screw M10x40 10,9 A3K	D
22	4700904557		22	Steel plain washer	
23	4700500029		6	Hexagon head screw	
24	4700343490		1	Air breather	D
25	4700160132		1	O-ring 124, 50x3, 00	
26	4700904558		5	Washer 17X30X6 300HV	
27	4700947694		5	Screw	D
28	4700791425		2	O-ring 174, 20x5, 70	D
29	4700791426		1	Radial lip seal	D
30			1	Sign plate	
31	4700527002		4	Drive screw	C
33	4700162017		1	Seal ring	B
34	4700343744		1	Magnetic plug	C
35	4700508029		2	Screw M10-1,5x30H 8,8	C
36	4812110663		8	Hexagon head screw M10x25H 10,9 A3K	D
37	4700904703		11	Steel plain washer	B
38	4700925519		7	Screw M12x55 10.9 GEOMET	D
39	4700387137		1	Thread ring	D
45	4700904231		3	Washer 13x24x2 300 HV	
47	4812110595		7	Hexagon head screw M12x45H 10,9 A3K	D
49	4700903374		6	Protective plug	
50		B	1	Hydraulic motor	
51		C	1	Hydraulic motor	
52	4700389434	D	1	Ballast	D
53	4700925228	D	3	Hexagon head screw	D
54	4700904703	D	10	Steel plain washer	B
55	4700570007	D	3	Hexagon nut M12	C
56	4700389432	D	1	Ballast	D
57	4700928198	D	4	Screw	C
58	4812110346		7	Spacer	C

A) See section " Frame"
B) See section "Hydraulic propulsion and brake"
C) See section "Hydraulic vibration"
D) Option

Engine

Item	Part No	Rem	Qty	Description	Code
10				**Engine Perkins 403D-11 (Page 42)**	
20				**Cooling system (Page 44)**	
30				**Exhaust system (Page 46)**	
40				**Fuel system (Page 48)**	
50				**Air intake system (Page 50)**	

Engine Perkins 403D-11

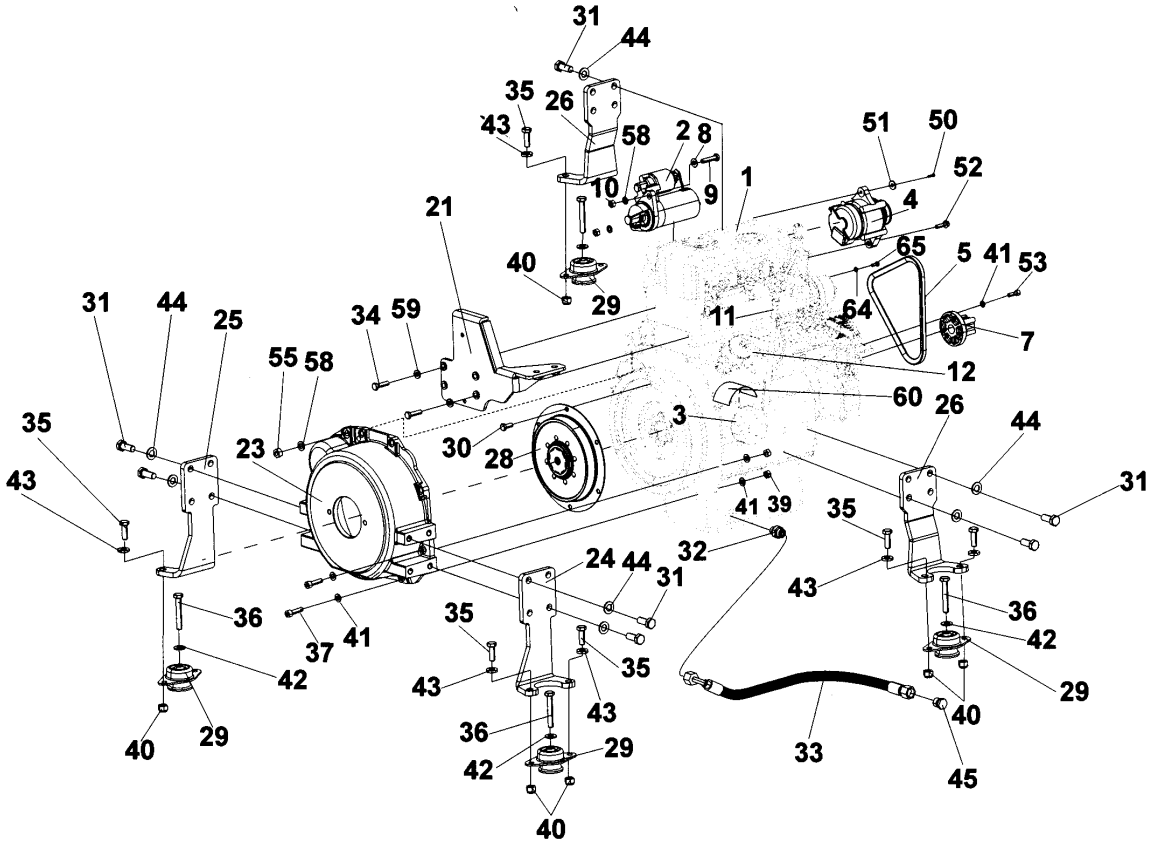

Engine Perkins 403D-11

Item	Part No	Rem	Qty	Description	Code
1	4700394541		1	Engine, Perkins 403D-11	D
	4812116572		1	Engine Perkins 403D-11	
	4700940227		1	. Water pump	C
	4700945123		1	. . Gasket	C
	4700945284		1	. Water temperature sensor	B
	4700940228		1	. Thermostat	D
	4700940976		1	. Gasket, oil sump	D
	4812155888		3	. Glow plug	
2	4700940231		1	. Starter	C
3	4700376554		1	. Oil filter	A
4	4700939977		1	. Alternator	C
5	4700939932		1	. V-belt	A
7	4700945735		1	. Fan coupling	
8	4700904230		2	. Steel plain washer	
9	4700500161		2	. Hexagon head screw	C
10	4700570006		2	. Nut	B
11	4700940229		1	. Oil dipstick	D
12	4700940447		1	. Fuel solenoid	B
13	4700945286		1	. Washer	D
14	4700945473		1	. Lift pump	C
	4700945629		1	. O-ring, lift pump	D
15	4812159667	C	1	. Oil pressure switch	
21	4700389003		1	Holder, air cleaner	D
23	4812120669		1	Bracket	
24	4700376770		1	Engine foot	D
25	4700376771		1	Engine foot	D
26	4700376772		2	Engine foot	D
28	4812120670		1	Coupling	
29	4700792026		4	Rubber mounts	D
30	4700502016		6	Screw	D
31	4700792250		16	Screw	D
32	4700791535		1	Connector	D
33	4700483684		1	Hydraulic hose	D
34	4700500022		4	Screw M8x30H 8.8	C
35	4700500029		8	Hexagon head screw	
36	4700500109		4	Screw M10-1,5x65 8,8	
37	4700508048		7	Hexagon socket head cap screw	C
39	4700570005		5	Nut M8	C
40	4700586018		8	Hexagon lock nut M10	C
41	4700904229		12	Steel plain washer 8,4x16x1,5	
42	4700904230		4	Steel plain washer	
43	4700904557		8	Steel plain washer	
44	4700904231		16	Washer 13x24x2 300 HV	
45	4700791493		1	Steel plug threaded	D
50	4700500047		1	Hexagon head screw	C
51	4700904640		1	Washer 8,4x22x3	C
52	4700500506		1	Screw	
53	4700508019		3	Screw M8x25 8.8	C
54	4700904229		3	Steel plain washer 8,4x16x1,5	
55	4700570006		2	Nut	B
56	4700904230		2	Steel plain washer	
57		B	2	Screw	
58	4700904637		2	Washer	C
59	4700904556		4	Washer 8,4x16x3,0	C
60	4700377520		1	Decal Oil filter	
64	4700904228		4	Steel plain washer 6,4x12x1,5	
65	4700500013		4	Screw M6-1x16 8,8	

B) Exist on engine
C) Not shown in illustration.

Cooling system

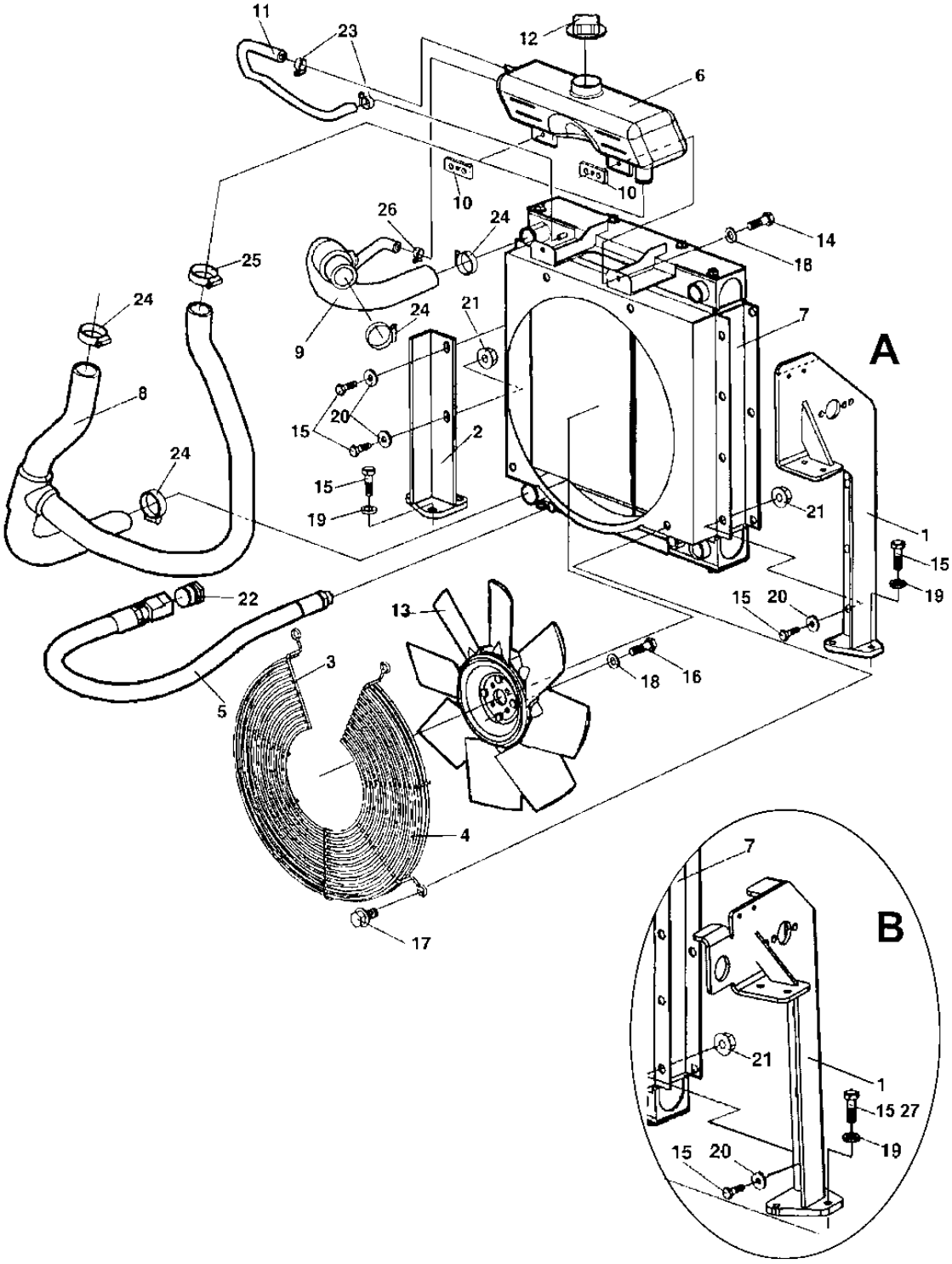

Cooling system

Item	Part No	Rem	Qty	Description	Code
1	4812110974	D	1	Cooler console	
2	4700387287		1	Cooler bracket	D
3	4700386963		1	Fan guard	D
4	4700387205		1	Fan guard	D
5	4700791780		1	Drainage hose	D
6	4700386893		1	Expansion reservoir	C
7	4700395227	B	1	Radiator	D
8	4700387099		1	Coolant hose	D
9	4700387100		1	Coolant hose	D
10	4700387428		2	Plate	D
11	4700371785	A	1	Rubber hose	D
12	4700903714		1	Cap	
13	4700389142		1	Fan	D
14	4700500040		2	Screw M6-1x20 8,8	C
15	4700500021		5	Screw M8-1,25x25 8.8	C
16	4700500040		4	Screw M6-1x20 8,8	C
17	4700901832		4	Screw	C
18	4700904228		6	Steel plain washer 6,4x12x1,5	
19	4700904640		6	Washer 8,4x22x3	C
20	4700904640		5	Washer 8,4x22x3	C
21	4700902286		5	Hexagon lock nut with flange	C
22	4700791493		1	Steel plug threaded	D
23	4700313075		2	Hose clamp	D
24	4700313035		4	Hose clamp	D
25	4700313035		1	Hose clamp	D
26	4700313001		1	Hose clamp	C
27	4700502016		6	Screw	D

A) L = 240 mm
B) Replaces earlier used 4700386950
D) Illustration B

Exhaust system

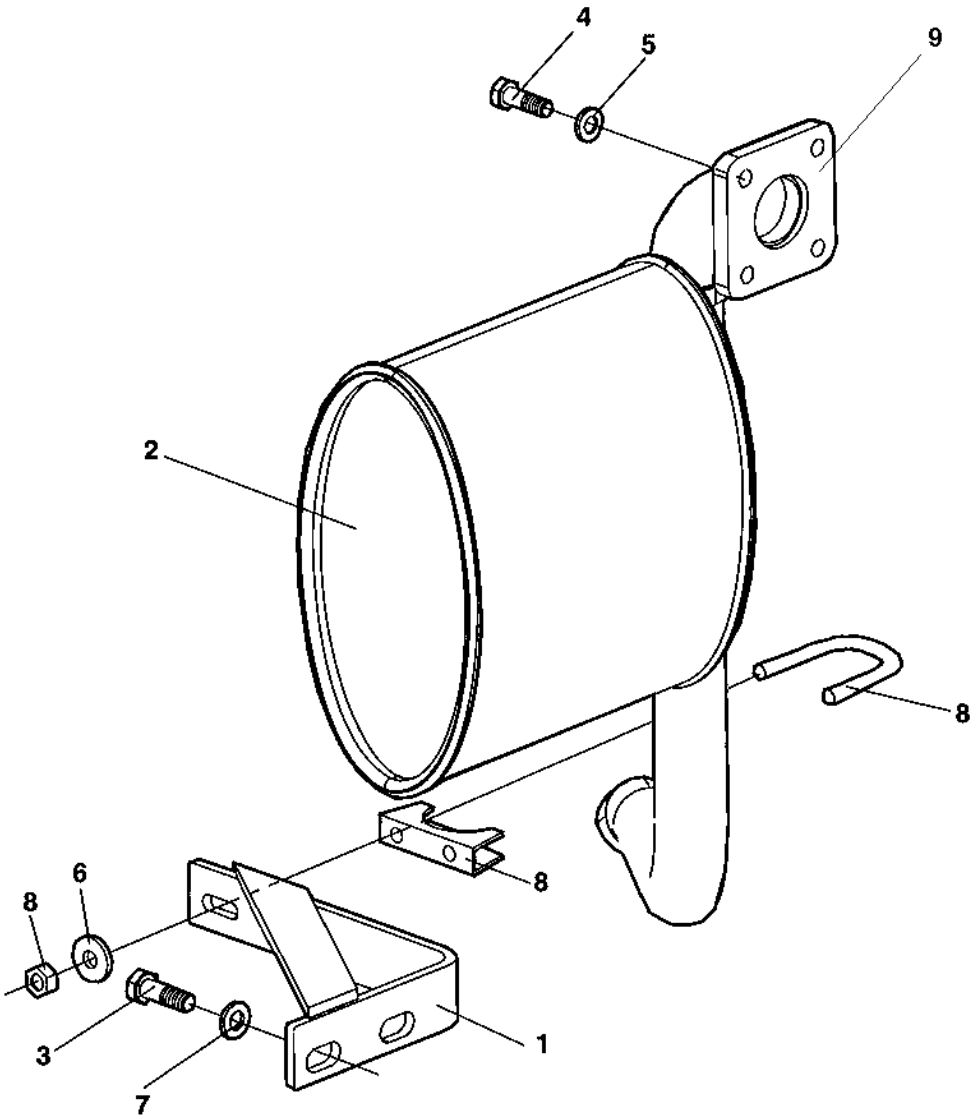

Exhaust system

Item	Part No	Rem	Qty	Description	Code
1	4700387201		1	Bracket	D
2	4700387097		1	Muffler	D
3	4700791483		2	Screw M12-1,25x25H 8.8	D
4	4700500021		4	Screw M8-1,25x25 8.8	C
5	4700904229		4	Steel plain washer 8,4x16x1,5	
6	4700904640		2	Washer 8,4x22x3	C
7	4700904703		2	Steel plain washer	B
8	4700927568		1	Clamp	D
9	4700945878	1	1	Gasket	D

1) Delivered with engine.

Fuel system

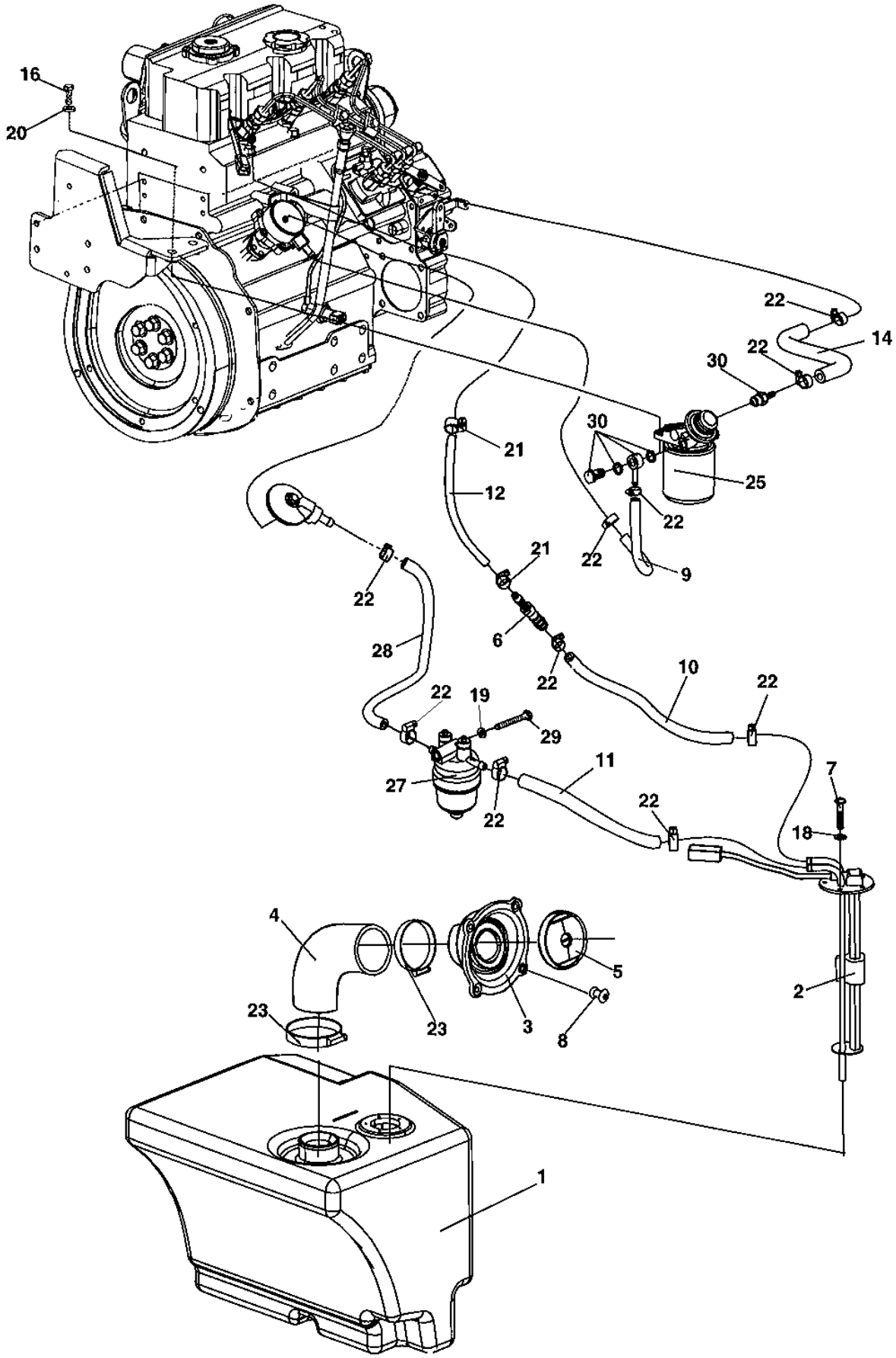
16
20
22
14
22
30
30
21
25
12
22
21
22
9
22
28
6
22
10
22
22
19
29
11
27
22
22
7
18
4
5
2
23
23
3
8
1

Fuel system

Item	Part No	Rem	Qty	Description	Code
1	4700387279		1	Fuel tank	D
2	4700387552		1	Level gauge	D
	4700945777		1	. Gasket	D
3	4700387682		1	Filler neck	D
4	4700387695		1	Fuel hose	D
5	4700394253		1	Fuel cap	D
	4700945753		1	. Key 2PCS "921"	
6	4700791774		1	Hose connection	C
7	4700903236		5	Screw, Thread rolling K40x20	C
8	4700792180		4	Blind rivet	D
9	4700904984	A	1	Fuel hose	C
10	4700904984	B	1	Fuel hose	C
11	4700904984	B	1	Fuel hose	C
12	4700791422	C	1	Hose	D
14	4700904984	E	1	Fuel hose	C
16	4700500029		2	Hexagon head screw	
18	4700904698		5	Washer 4,3x8x0,8	C
19	4700904229		1	Steel plain washer 8,4x16x1,5	
20	4700904557		2	Steel plain washer	
21	4700313108		2	Hose clamp	
	4700313075		2	Hose clamp	D
22	4700313108		10	Hose clamp	
23	4700313023		2	Hose clamp	
25	4700376555		1	Fuel filter	A
	4700945418		1	Filter head	D
27	4700940894		1	Water separator, cpl	C
	4700940922		1	. Filter element	
	4700940203		1	. O-ring	D
28	4700904984	K	1	Fuel hose	C
29	4700500068		1	Screw M08x65	C
30			N	Existing on engine	

A) L = 465 mm
B) L = 395 mm
C) L = 350 mm
E) L = 200 mm
K) L = 300 mm

Air intake system

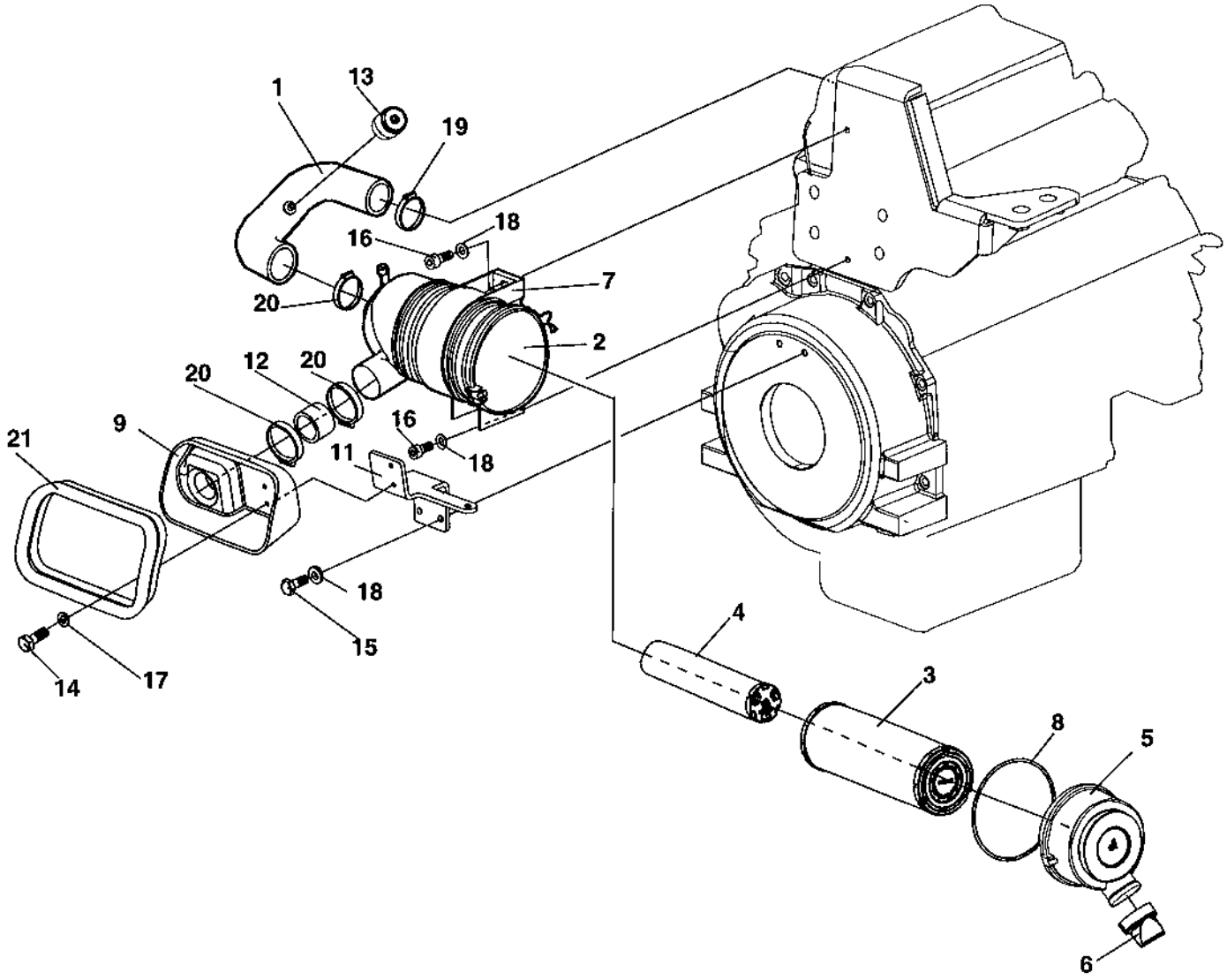

Air intake system

Item	Part No	Rem	Qty	Description	Code
1	4700389019		1	Air inlet hose	D
2	4700386951		1	Air filter	C
3	4700939802		1	. Air filter element Main	A
4	4700939803		1	. Air filter element Safety	A
5	4700939804		1	. Dust cap	D
6	4700939805		1	. Vacuator cap	B
7	4700939806		1	. Plastic mounting band	D
8	4700939807		1	. O-ring	C
9	4700387118		1	Box	D
11	4700389005		1	Bracket	D
12	4700387200		1	Hose	D
13	4700389036		1	Mechanical indicator	D
14	4700500013		2	Screw M6-1x16 8,8	
15	4700500053		2	Screw M8x20H 8.8	
16	4700508092		2	Screw	C
17	4700904228		2	Steel plain washer 6,4x12x1,5	
18	4700904229		4	Steel plain washer 8,4x16x1,5	
19	4700313010		1	Hose clamp	C
20	4700313010		3	Hose clamp	C
21	4700288129	A	N	Edge trim	D

A) L = 0,66 m

Hydraulic system

Item	Part No	Rem	Qty	Description	Code
10				**Hydraulic propulsion and brake system motor (Page 54)**	
20				**Hydraulic propulsion and brake system pump (Page 58)**	
30				**Hydraulic vibration (Page 60)**	
50				**Hydraulic steering (Page 66)**	

Hydraulic propulsion and brake system motor

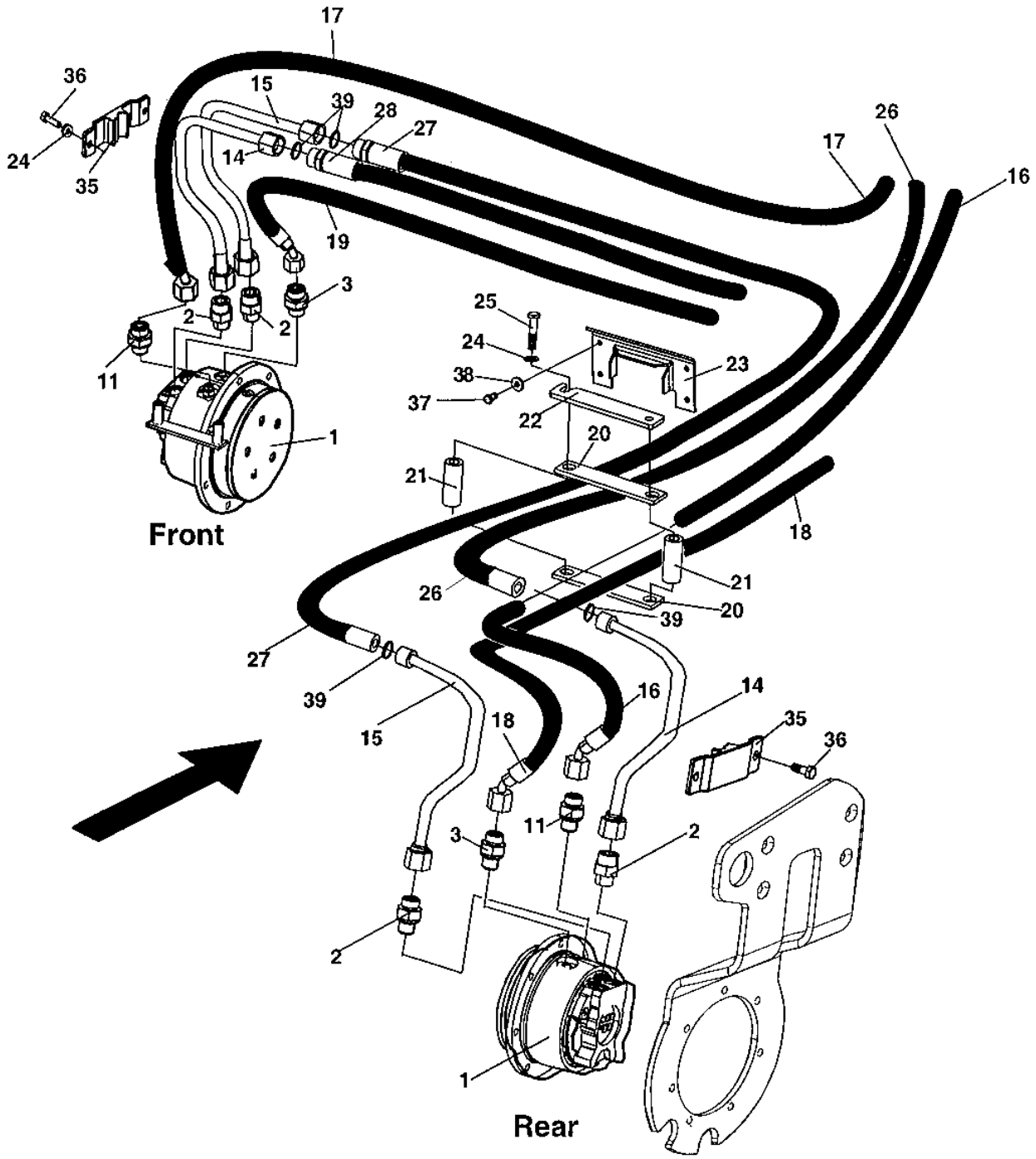

Hydraulic propulsion and brake system motor

Item	Part No	Rem	Qty	Description	Code
1	4700387270		2	**Hydraulic motor (Page 56)**	
2	4700904641		4	Straight connector orfs	
3	4700791535		2	Connector	D
11	4700791537		2	Straight connector	
14	4700387597		2	Pipe	D
15	4700387598		2	Pipe	D
16		A	1	Hydraulic hose	
17		A	1	Hydraulic hose	
18		A	1	Hydraulic hose	
19		A	1	Hydraulic hose	
20	4700387678		2	Rubber part	D
21	4700387677		2	Spacer sleeve	C
22	4700387676		1	Hose bracket	D
23	4700389556		1	Rubber part	D
24	4700904229		6	Steel plain washer 8,4x16x1,5	
25	4700500068		2	Screw M08x65	C
26		A	1	Hydraulic hose	
27	4700483666		1	Hydraulic hose	D
28		A	1	Hydraulic hose	
35	4700388960		2	Hose clamp	D
36	4700500053		4	Screw M8x20H 8.8	
37	4700500019		4	Hexagon head screw M8x16H 8,8	
38	4700904640		4	Washer 8,4x22x3	C
39	4700904009		4	O-ring	D

A) See section " Propulsion system, pump"

4700387270 Hydraulic motor

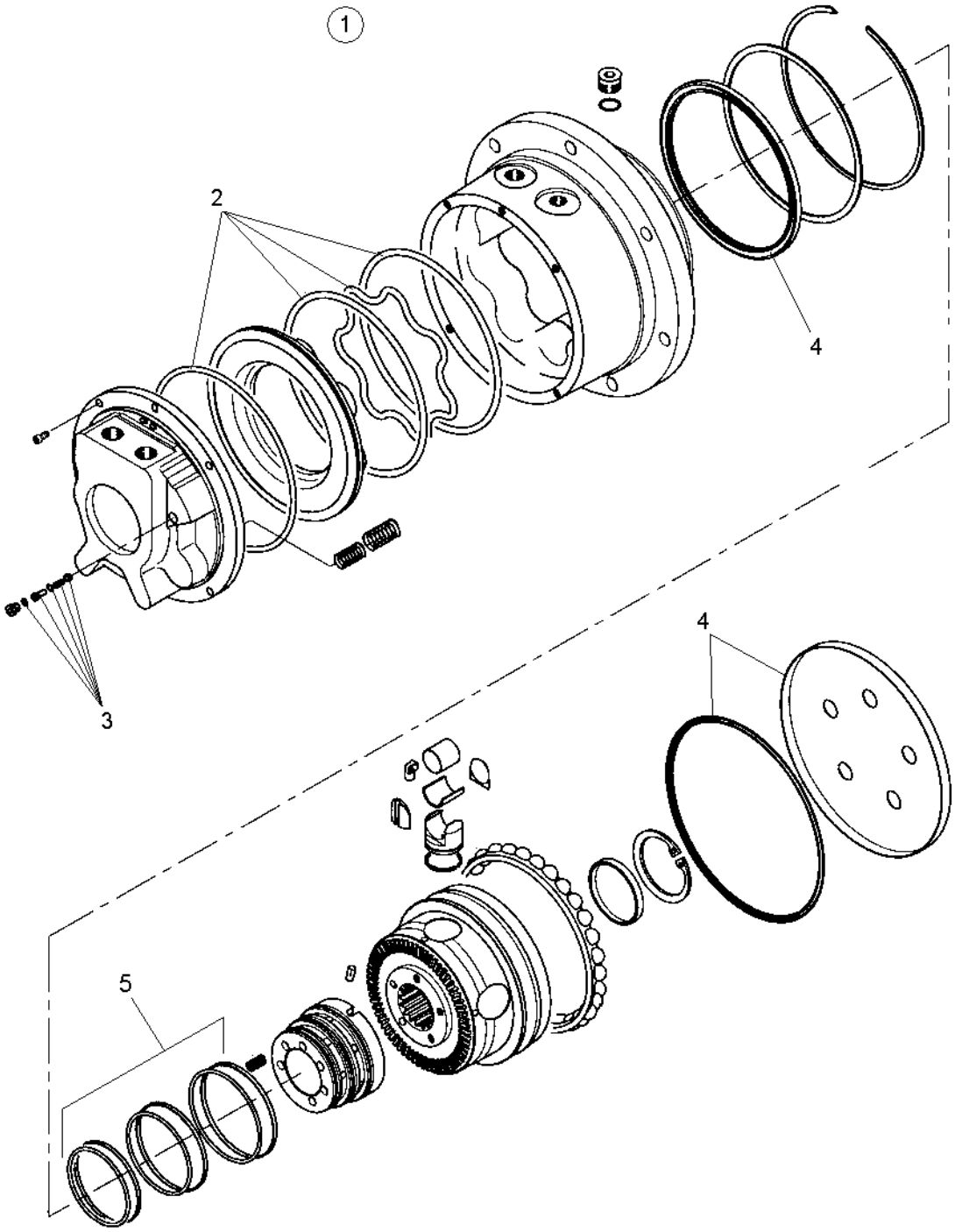

4700387270 Hydraulic motor

Item	Part No	Rem	Qty	Description	Code
1	4700387270		1	**Hydraulic motor (Page 56)**	
2	4700945532		1	. Sealing kit Debraking system	D
3	4700945658		1	. Sealing kit	
4	4700945531		1	. Seal kit Rotating parts	C
5	4812156798		1	. Seal kit	

Hydraulic propulsion and brake system pump

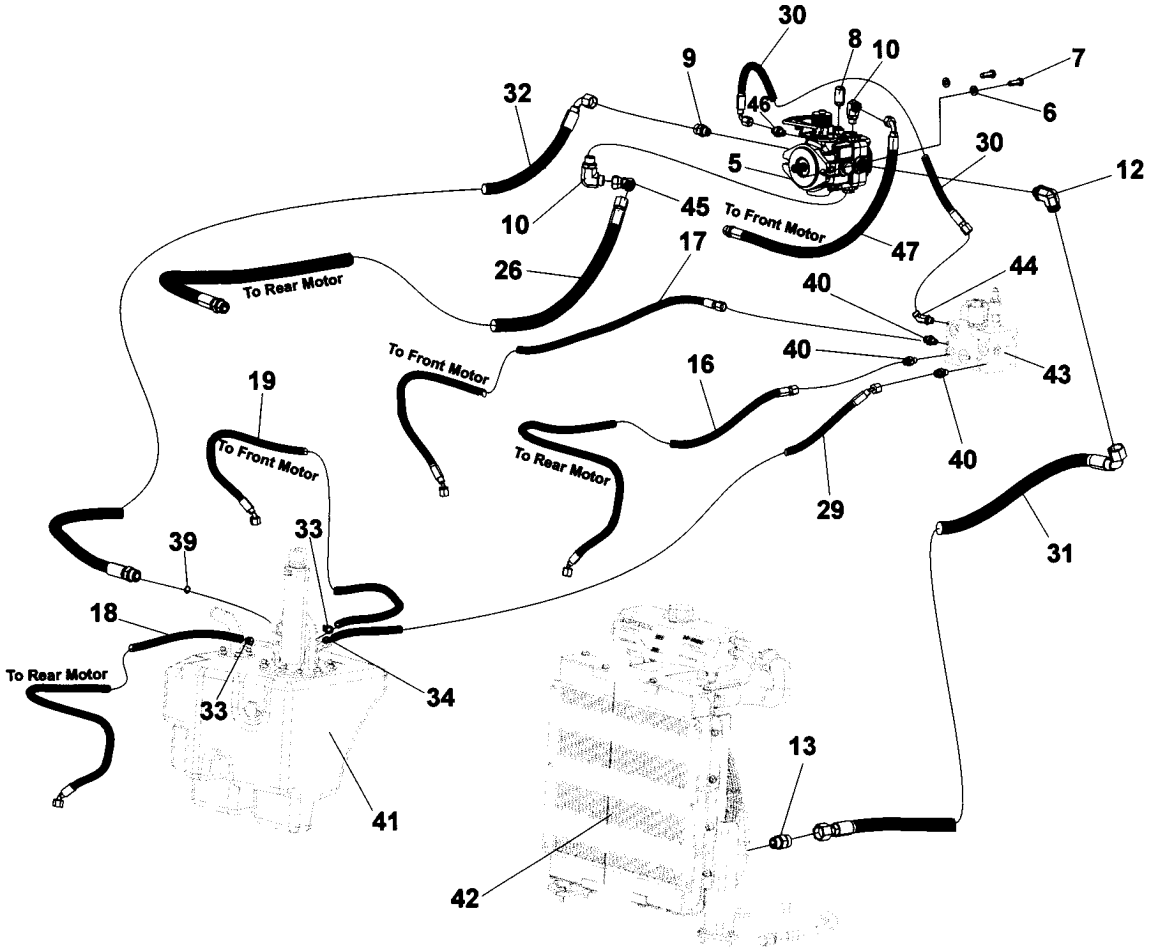

Hydraulic propulsion and brake system pump

Item	Part No	Rem	Qty	Description	Code
4	4700313102		1	Cable ties	
5	4812119960		1	Hydraulic pump	C
6	4700904703		2	Steel plain washer	B
7	4700500037		2	Screw	C
8	4812120635		1	Measuring nipple	C
9	4700904727		1	Adapter	
10	4700791699		2	Elbow 90°	
12	4700792332		1	Elbow 90 orfs	
13	4700791743		1	Straight connector orfs	D
16	4700483692	E	1	Hydraulic hose	D
17	4700483655	F	1	Hydraulic hose	D
18	4700389407	G	1	Hydraulic hose	D
19	4700389408	H	1	Hydraulic hose	D
26	4700483695	P	1	Hydraulic hose	D
29	4700389400	K	1	Hydraulic hose	D
30	4700483652	L	1	Hydraulic hose	D
31	4812120636	M	1	Hydraulic hose	D
32	4700483714	N	1	Hydraulic hose	D
33	4700313001		2	Hose clamp	C
34	4700313108		1	Hose clamp	
39	4700904009		1	O-ring	D
40	4700791538		1	Straight connector	C
41		B	1	Hydraulic tank	
42		C	1	Radiator	
43		B	1	Combination valve	
44	4700791543	D	1	Elbow 45°	D
45	4700791745		1	Elbow 90, O-ring with swivel	D
46	4700791541		1	Straight connector	
47	4700483663	O	1	Hydraulic hose	D

B) See section " Hydraulic vibration"
C) See section " Cooling system"
D) Replace one adapter 4700791538
E) L = 2,20 m
F) L = 1,17 m
G) L = 1,75 m
H) L = 1,30 m
K) L = 0,46 m
L) L = 0,41 m
M) L = 0,81 m
N) L = 0,85 m
O) L = 0,77 m
P) 1,85 m

Hydraulic vibration

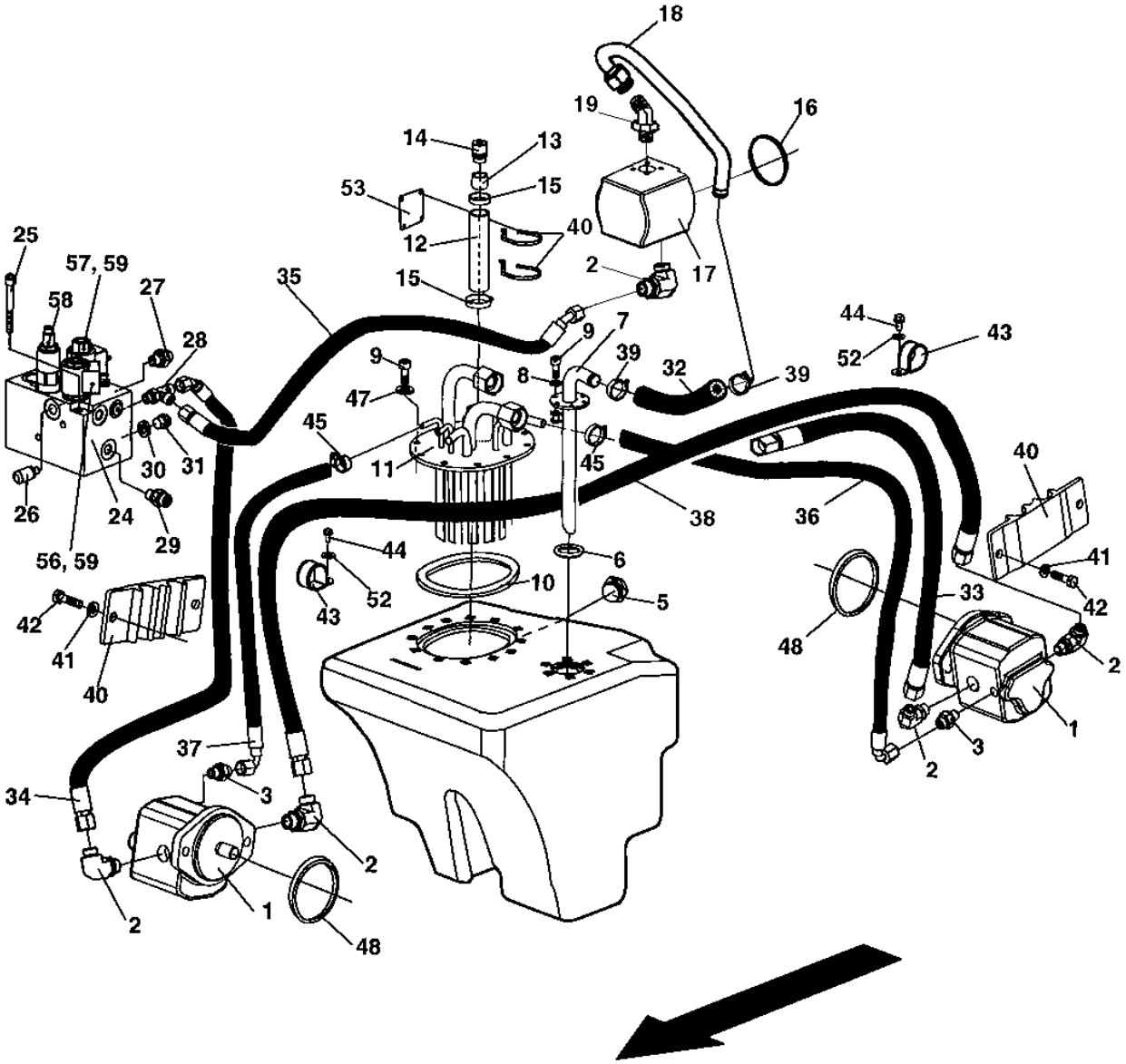

Hydraulic vibration

Item	Part No	Rem	Qty	Description	Code
1	4700390316		2	**Hydraulic motor (Page 62)**	
	4700945340		2	Seal kit	B
2	4700791699		5	Elbow 90°	
3	4700791541		2	Straight connector	
4	4700387278		1	Hydraulic oil tank	D
5	4700791395		1	Sight plug	
6	4700791794		1	O-ring	D
7	4700387758		1	Suction pipe	D
8	4700904228		6	Steel plain washer 6,4x12x1,5	
9	4700508002		16	Screw M6x16	
10	4700792070		1	O-ring	D
11	4700387713		1	Return filler pipe	D
12	4700205067	A	N	Rubber hose	D
13	4700357139		1	Connector	C
14	4700357138		1	Ventilating filter	
15	4700313008		2	Hose clamp	D
16	4700160101		1	O-ring	D
17	4700395520		1	**Hydraulic pump (Page 64)**	
18	4700395497		1	Suction pipe	D
19	4700792707		1	Elbow 45°	D
24	4700388194		1	Combination valve	C
25	4700508094		2	Screw	
26	4700901157		1	Measuring nipple	C
27		C	1	Straight o-ring connector	
28	4700791700		1	Tee-connector	D
29	4700791538		4	Straight connector	C
30	4700162015		1	Seal ring	D
31	4700232160		1	Plug	
32	4700791941		1	Hydraulic hose	D
33	4700483669		1	Hydraulic hose	D
34	4700483670		1	Hydraulic hose	D
35	4700484257		1	Hydraulic hose	D
36	4700389405		1	Hydraulic hose	D
37	4700389406		1	Hydraulic hose	D
38	4700483694		1	Hydraulic hose	D
39	4700313035		2	Hose clamp	D
40	4700388653		2	Hose clamp	D
41	4700904229		4	Steel plain washer 8,4x16x1,5	
42	4700500053		4	Screw M8x20H 8.8	
43	4700283711		3	Hose clamp	
44	4700508092		3	Screw	C
45	4700313108		2	Hose clamp	
47	4700904735		10	Washer	C
48	4700160032		2	O-ring	D
52	4700904556		3	Washer 8,4x16x3,0	C
53	4700380343		1	Sign "BIO HYDRAULIC OIL"	D
	4700792773		1	Sign "BIO HYDRAULIC OIL" PANOLIN	D
54	4700925802		2	Cable ties L=142 mm	C
56	4700940885	D	1	Solenoid valve	C
57	4700940886	D	1	Solenoid valve	C
58	4700940888	D	1	Valve	C
59	4700940887	D	1	Coil	B

A) L = 0,22m
C) See section " Hydraukic steering "
D) Complete with pos. 24.

4700390316 Hydraulic motor

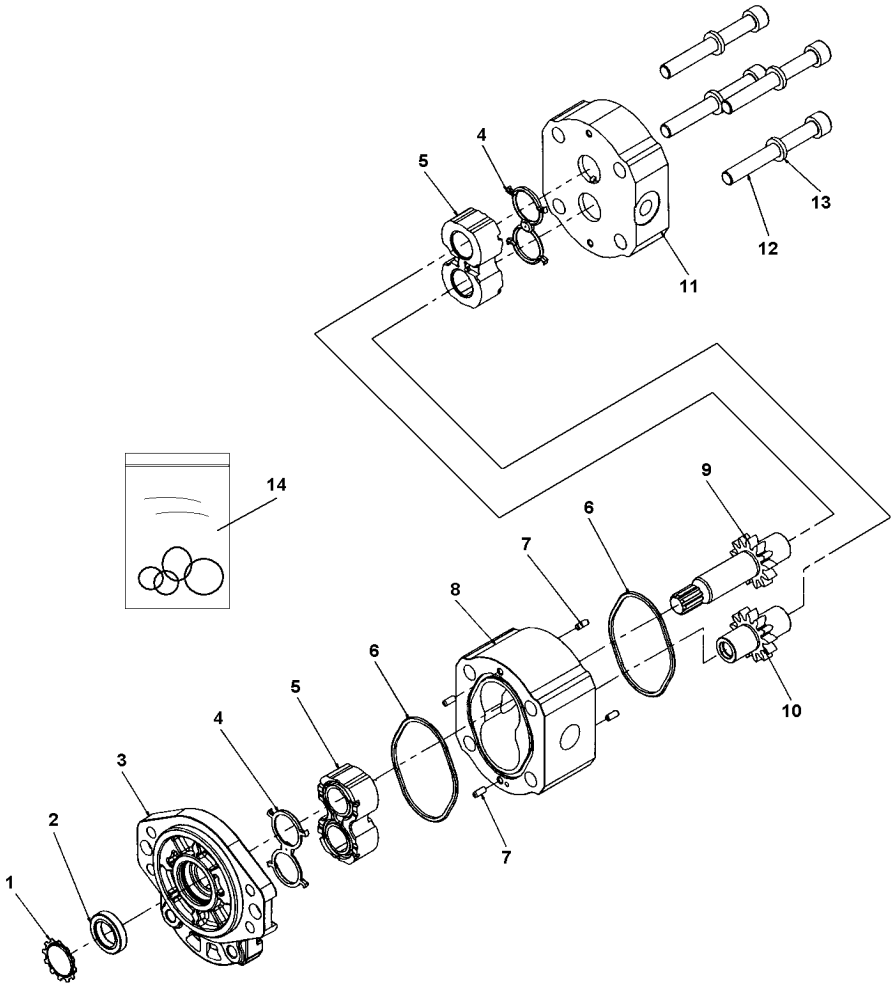

4700390316 Hydraulic motor

Item	Part No	Rem	Qty	Description	Code
1			1	. Star ring	
2			1	. Shaft seal	
3			1	. Mounting flange	
4			2	. Seal	
5			2	. Bearing block	
6			2	. O-ring	
7			4	. Dowel pin	
8			1	. Gear housing	
9			1	. Drive gear	
10			1	. Idle gear	
11			1	. End cover	
12			4	. Bolt	
13			4	. Washer	
14	4812157555		1	. Seal kit	

4700395520 Hydraulic pump

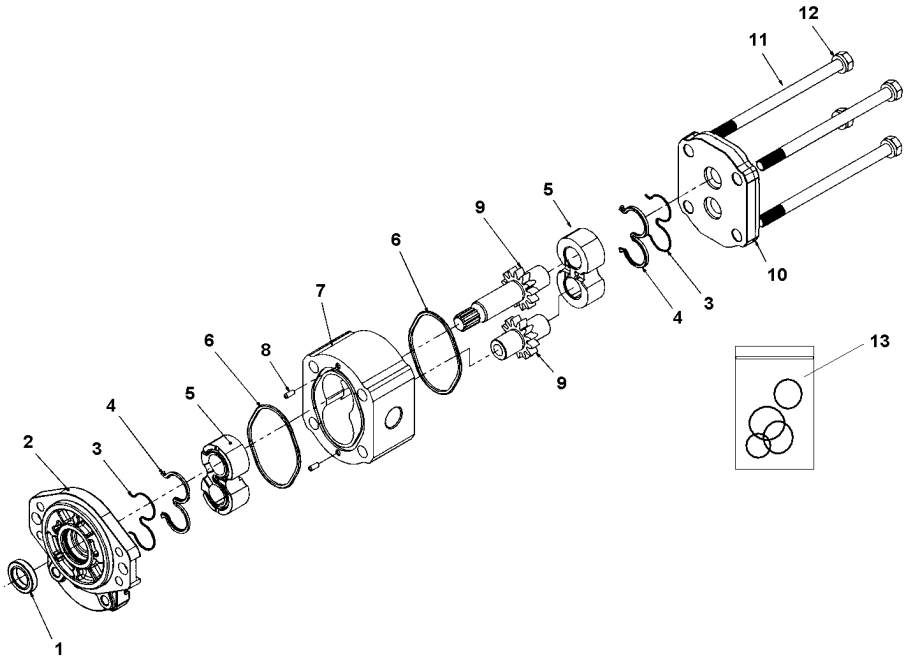

4700395520 Hydraulic pump

Item	Part No	Rem	Qty	Description	Code
1		1	1	. Lip seal ring	
2			1	. Shaft end cover	
3		1	2	. Channel seal	
4			2	. Back-up seal	
5			2	. Thrust block	
6		1	2	. Section seal	
7			1	. Aluminum housing	
8			2	. Dowel pin	
9		1	1	. Gear shaft set	
10			1	. Port end cover	
11			4	. Cap screw	
12			4	. Washer	
13	4812157560		1	. Seal kit	

1) Part of seal kit

Hydraulic steering

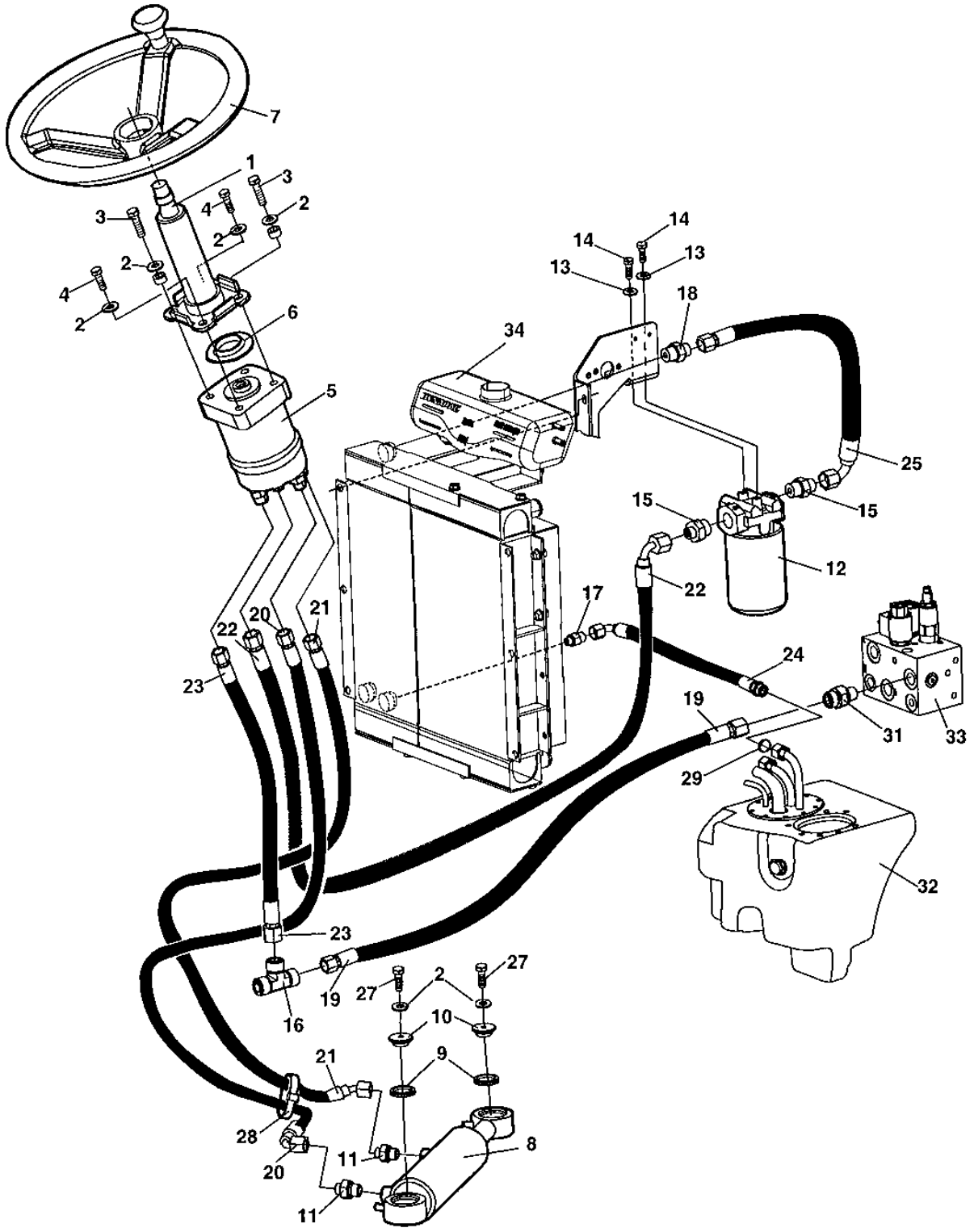

Hydraulic steering

Item	Part No	Rem	Qty	Description	Code
1	4700902123		1	Steering column	C
2	4700904230		6	Steel plain washer	
3	4700500031		2	Screw	
4	4700500048		2	Screw M10-1,5x20 8,8	
5	4700387274		1	**Steering valve (Page 68)**	
6	4700928830		1	Rubber washer	D
7	4700372964		1	Steering wheel, cpl	D
	4700935614		1	. Turning knob	D
	4700935613		1	. Cover	D
8	4700387275		1	**Hydraulic cylinder (Page 70)**	
	4700945526		2	. Bearing	
9	4700791565		2	Sealing	
10	4700376861		2	Washer	
11	4700791542		2	Straight connector	D
12	4700387277		1	Hydraulic oil filter, cpl	A
	4700376636		1	. Cleaning filter element Maximum 50 hours use	A
	4700376637	C	1	Hydraulic filter element	A
13	4700904229		2	Steel plain washer 8,4x16x1,5	
14	4700500053		2	Screw M8x20H 8.8	
15	4700791408		2	Straight o-ring connector	
16	4700791701		1	Tee-connector	D
17	4700791540		1	Straight connector	
18	4700791410		1	Straight o-ring connector	
19	4700483653		1	Hydraulic hose	D
20	4700483654		1	Hydraulic hose	D
21	4700483655		1	Hydraulic hose	D
22	4700483656		1	Hydraulic hose	D
23	4700483657		1	Hydraulic hose	D
24	4700483696		1	Hydraulic hose	D
25	4700483662		1	Hydraulic hose	D
26	4700355869		2	Spacer sleeve	D
27	4700947684		2	Screw	
28	4700313102		1	Cable ties	
29	4700904009		1	O-ring	D
31	4700791412		1	Straight o-ring connector	
32		A	1	Hydraulic tank	
33		A	1	Combination valve	
34		B	1	Radiator	

A) See section " Hydraulic vibration"
B) See section " Cooling system "
C) Spare part for ordinary service

4700387274 Steering valve

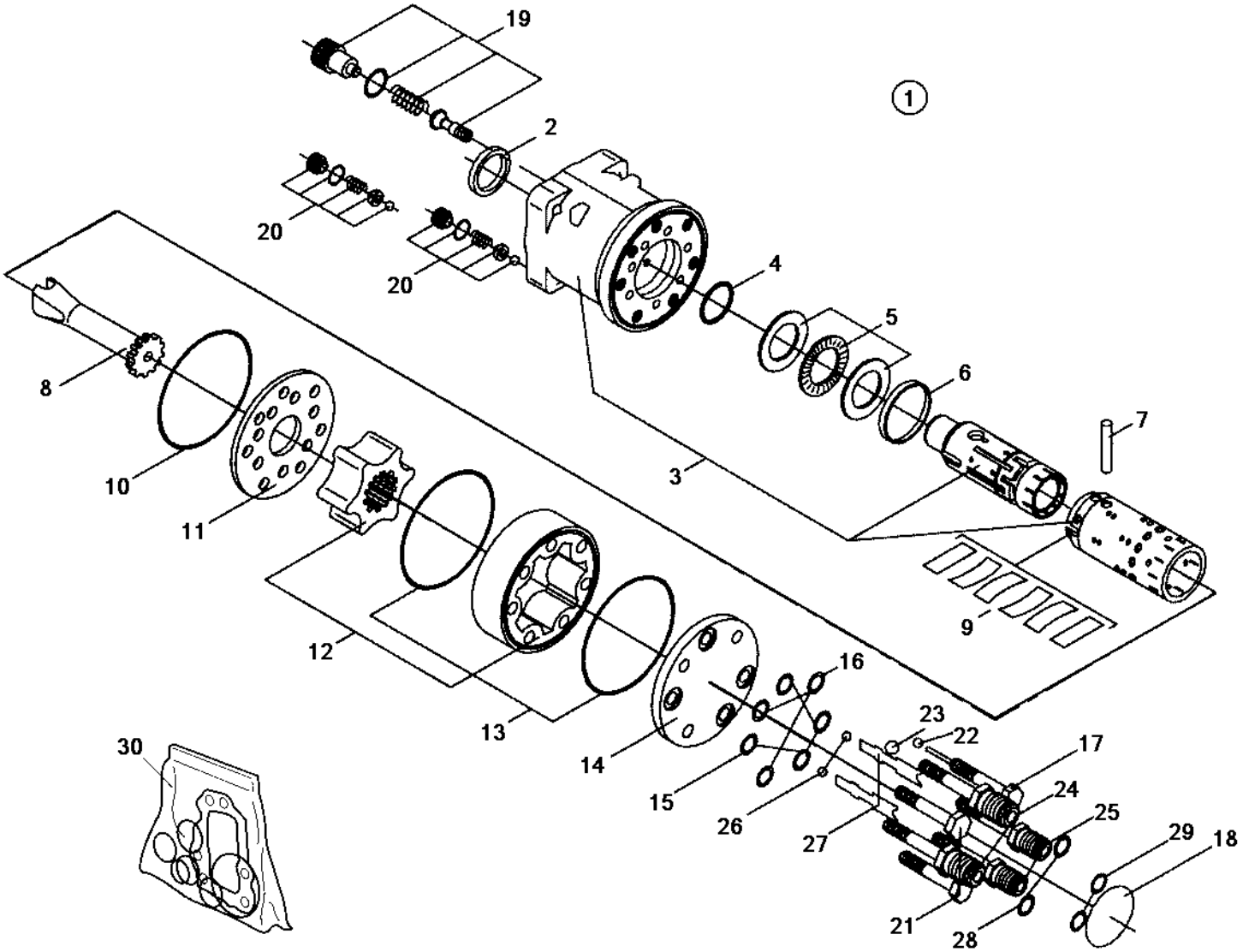

4700387274 Steering valve

Item	Part No	Rem	Qty	Description	Code
1			1	Steering valve, cpl	
2		A	1	. Seal ring	
3			1	. Housing, spool and sleeve	
4		A	1	. O-ring	
5			1	. Bearing	
6			1	. Ring	
7			1	. Cross pin	
8			1	. Cardan shaft	
9			1	. Set of springs	
10		A	1	. O-ring	
11			1	. Distributor plate	
12			1	. Gear wheel set	
13		A	2	. O-ring	
14			1	. End cover	
15		A	4	. O-ring	
16		A	3	. Washer	
17			1	. Screw with pin	
18			1	. Name plate	
19			1	. Relief valve	
20			2	. Shock valves	
21			2	. Screw	
22			1	. Ball	
23			1	. Ball	
24	4812159159	B	2	. Port	
25	4812159160	C	2	. Port	
26			2	. Ball	
27			2	. Ball stop	
28			2	. O-ring	
29			2	. O-ring	
30	4700935429		1	. Seal kit	

A) Included in sealkit, item 30
B) P and T
C) L and R

4700387275 Hydraulic cylinder

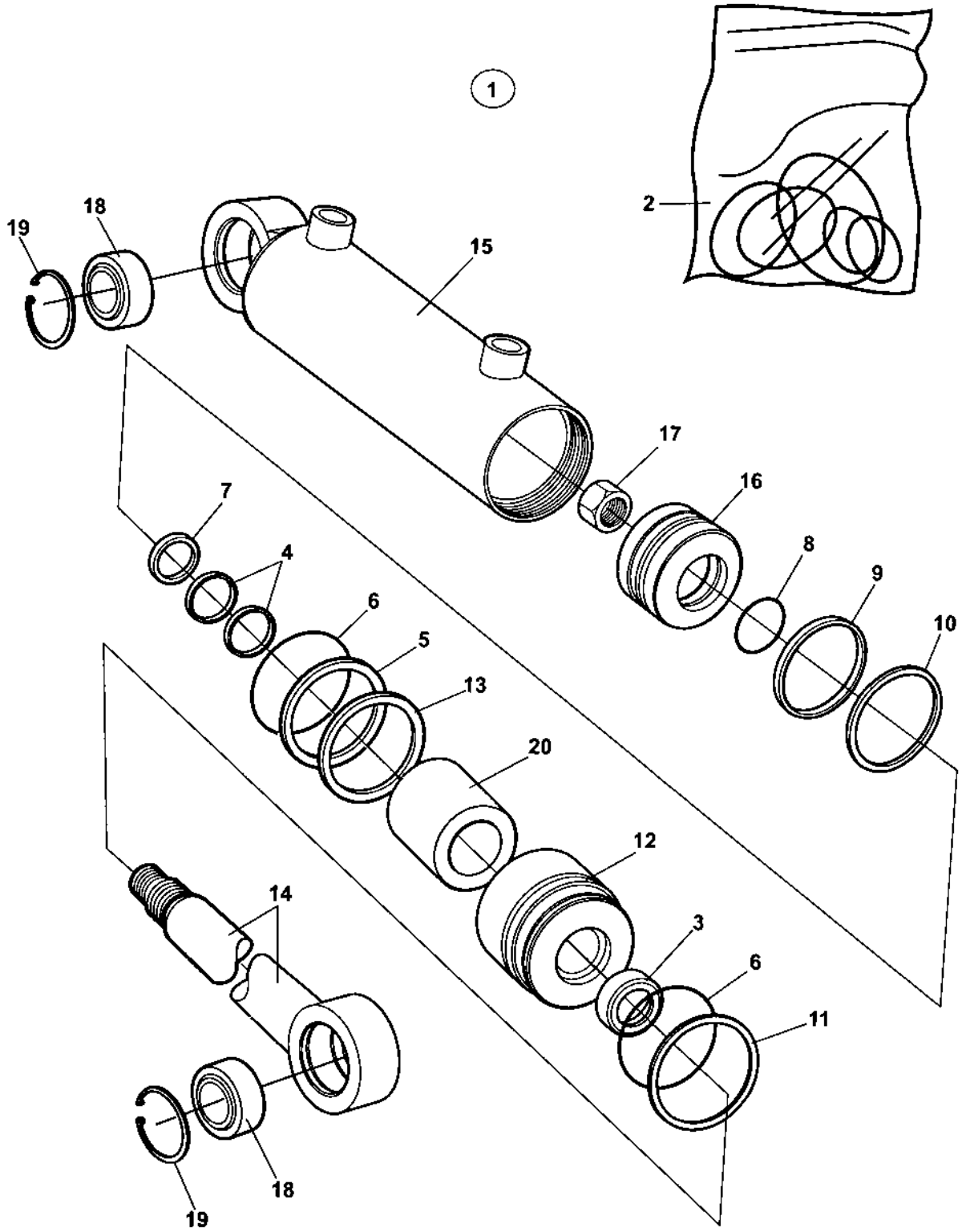

4700387275 Hydraulic cylinder

Item	Part No	Rem	Qty	Description	Code
1	4700387275		1	**Hydraulic cylinder (Page 70)**	
2	4700945668		1	. Seal kit	
3			1	. . Seal	
4			2	. . Seal	
5			1	. . Back-up ring	
6			2	. . O-ring	
7			1	. . Seal	
8			1	. . O-ring	
9			1	. . Seal	
10			1	. . Seal	
11			1	. Retaining ring	
12			1	. Steering	
13			1	. Retaining ring	
14			1	. Piston rod	
15			1	. Cylinder	
16			1	. Piston block	
17			1	. Cylinder nut	
18	4700945526		1	. Bearing	
19	4812159771		1	. Retaining ring	
20		A	1	. Spacer	

A) Not valid for this model

Electrical equipment

Item	Part No	Rem	Qty	Description	Code
21				**Electrical equipment (Page 74)**	
25				**Control panel, relays (Page 76)**	
31				**Driving lights Option (Page 78)**	
40				**Working lights Option (Page 80)**	
50				**Rotating beacon with Rops Option (Page 82)**	
60				**Back-up alarm (Page 84)**	

Electrical equipment

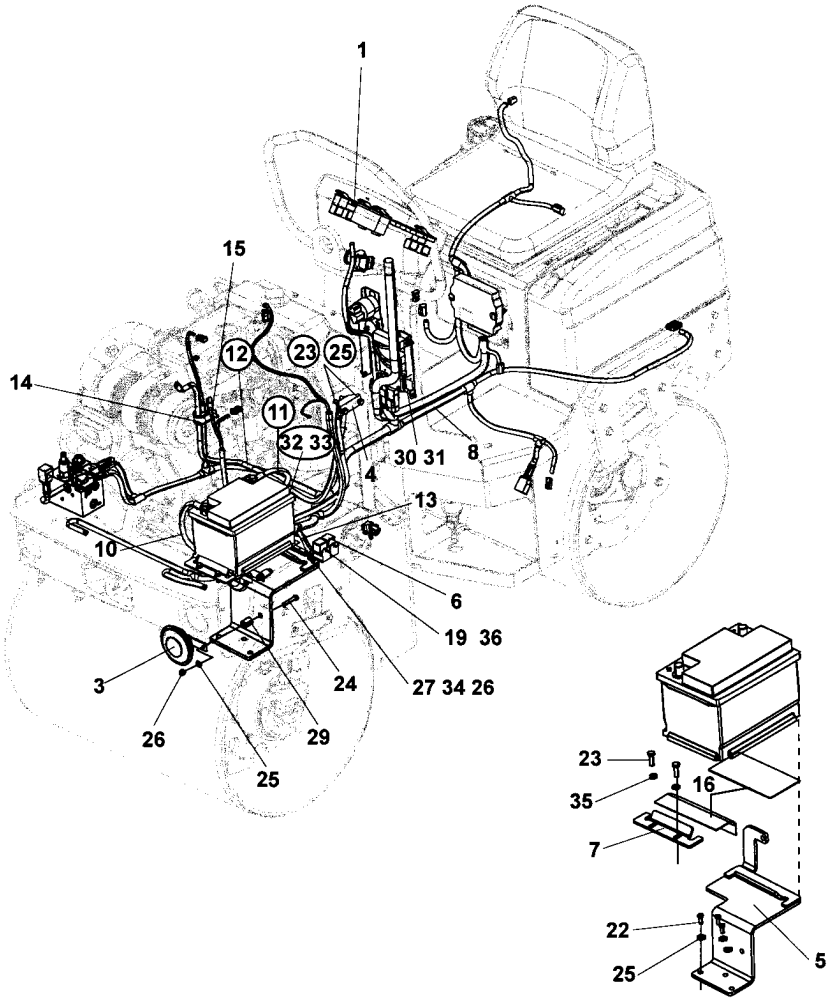

Electrical equipment

Item	Part No	Rem	Qty	Description	Code
1			1	Control panel	
3	4700999027		1	Horn	B
4	4700377058	A	1	Connection block	D
5	4812112007		1	Battery shelf	D
6	4700903956		2	Relay	
7	4812110724		1	Battery holder	
8	4812114657		1	Cable harness	
10	4700792019		1	Battery cable	D
11	4700792020		1	Battery cable	D
12	4700377063		1	Connection cable coarse	D
13	4700791639		1	Battery cable	
14	4700921050		1	Clamp	C
15	4700508092		1	Screw	C
16	4812110759		2	Rubber cloth	
19	4700500041		2	Screw	C
22	4700500053		3	Screw M8x20H 8.8	
23	4700500021		4	Screw M8-1,25x25 8.8	C
24	4700500024		1	Screw M8x45	D
25	4700904229		5	Steel plain washer 8,4x16x1,5	
26	4700586003		4	Lock nut M8	
27	4700570005		1	Nut M8	C
29	4700355704		1	Spacer sleeve	
30	4700904228		1	Steel plain washer 6,4x12x1,5	
31	4700570004		1	Nut M6X1,00 -8 A2K	
32	4700904231		1	Washer 13x24x2 300 HV	
33	4700791483		1	Screw M12-1,25x25H 8.8	D
34	4700903768		1	Threaded stud	
35	4700904556		2	Washer 8,4x16x3,0	C
36	4700904281		2	Washer 5,3x10x1 300HV	C

A) Exsist in machines without battery disconnector.

Control panel, relays

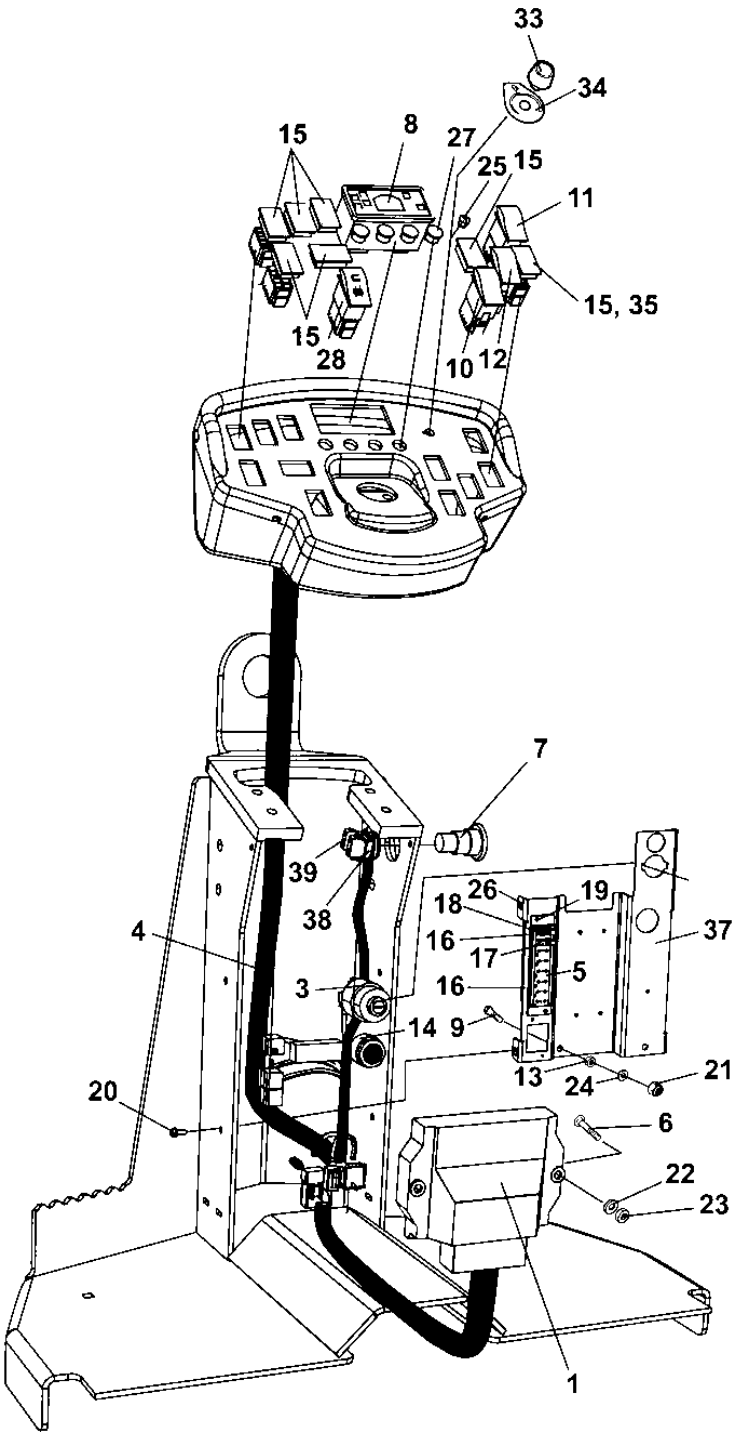

Control panel, relays

Item	Part No	Rem	Qty	Description	Code
1	4812114386	E	1	Control unit, ECU	
			1	. Decal	
		E	1	. Software	
	4700378932		1	. Instruction	D
3	4700238158		1	Ignition switch	B
	4700940451		1	. Key	D
4	4700396971		1	Cable harness	D
5	4700791185		1	Fuse box	
6	4700791775		2	Bolt	C
7	4700791739		1	Emergency stop	
8	4700395394		1	Control panel	D
9	4700500075		1	Screw M6-1,0x25 8.8	C
10	4700791578		1	Switch, horn	
11	4700791579		1	Switch, sprinkler	B
12	4700791580		1	Switch, vibration	B
13	4700570004		1	Nut M6X1,00 -8 A2K	
14	4700385599		1	Buzzer	
15	4700791588	D	7	Panel plug	
16	4700791211		2	Contact bridge	C
17	4700901228		1	Fuse 15A	D
18	4700903741		1	Fuse 20A Yellow Medium	
19	4700901767		2	Screw ST3,5x9,5 Black	
20	4812117868		4	Screw M05x16	
21	4700586002		1	Lock nut M6 -8	
22	4700904556		2	Washer 8,4x16x3,0	C
23	4700586003		2	Lock nut M8	
24	4700904228		1	Steel plain washer 6,4x12x1,5	
25	4700792083		1	Plug	
26	4700202042	A	1	Rubber strip	
27	4700792320		4	Plug	D
28	4700791582		1	Switch, parking brake	
33	4700388737	F	1	Potentiometer	B
34	4700377139	F	1	Decal	D
35	4700791581	F,G	1	Switch	D
37	4700387683		1	Distribution control plate	
38	4700389840		1	Connector w. Fixing collar	
39	4700791723		1	Connector N/C	

A) L = 70 mm
D) For Option switch, see another section of Electrical system or Optional equipment
E) Machine SN required when placing order
F) Option
G) See section "Vibration shot-off one drum"

Driving lights Option

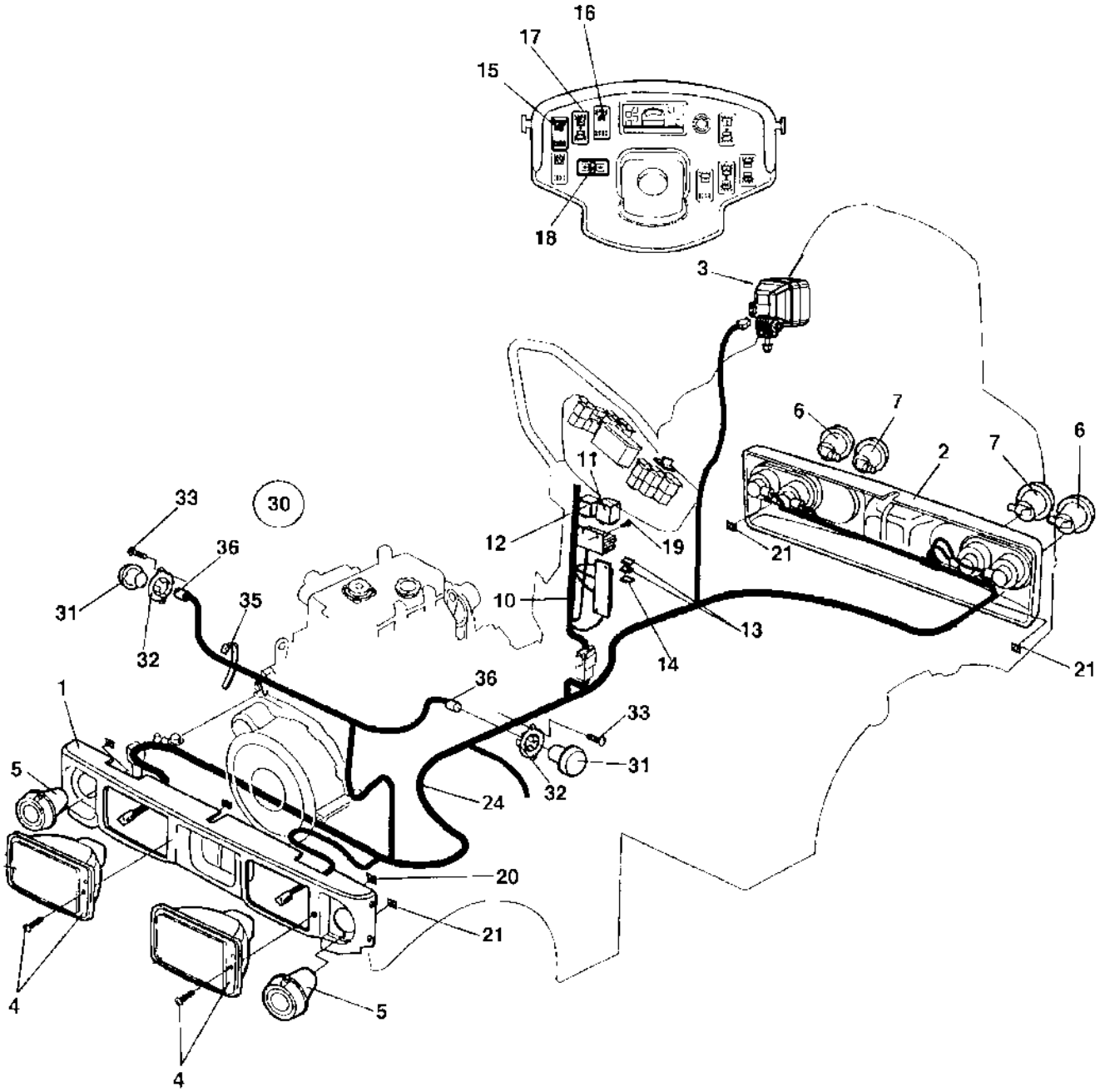

Driving lights Option

Item	Part No	Rem	Qty	Description	Code
1	4700387377		1	Frame cover	D
2	4700387378		1	Frame cover	D
3	4812110216		1	Work lamp	C
	4700500230		1	. Screw M8-1.25x35	
	4700904230		1	. Steel plain washer	
	4700586018		1	. Hexagon lock nut M10	C
4	4700791951	A	2	Headlight	
	4700792059	B	2	Headlight	
5	4700791953		2	Direction indicator	B
6	4700791954		2	Direction indicator	B
7	4700791955		2	Brake/position light	D
10	4700388636		1	Cable harness	D
11	4700904989		1	Flash relay Option	
12	4700903956		1	Relay	
13	4700901225		2	Fuse 5A	A
14	4700901227		1	Fuse 10A	B
15	4700791587		1	Switch, working light	B
16	4700791584		1	Switch, hazard flashers	
17	4700791583		1	Switch, driving light	
18	4700791586		1	Switch, drive direction	D
19	4700791916		2	Screw	C
20	4700791970		4	Speed nut	D
21	4700791971		12	Quick lock nut	C
24	4700377140		1	Cable harness	D
30			1	Side direction lights	
31	4700791704		2	. Side direction light	D
	4700904889		2	. Bulb	D
32	4700388382		2	. Holder side light	D
33	4700791643		4	. Screw	C
35	4700903810		4	. Cable tie holder	
36	4700960079		4	. Connector	D

A) Right asym
B) Left asym.

Working lights Option

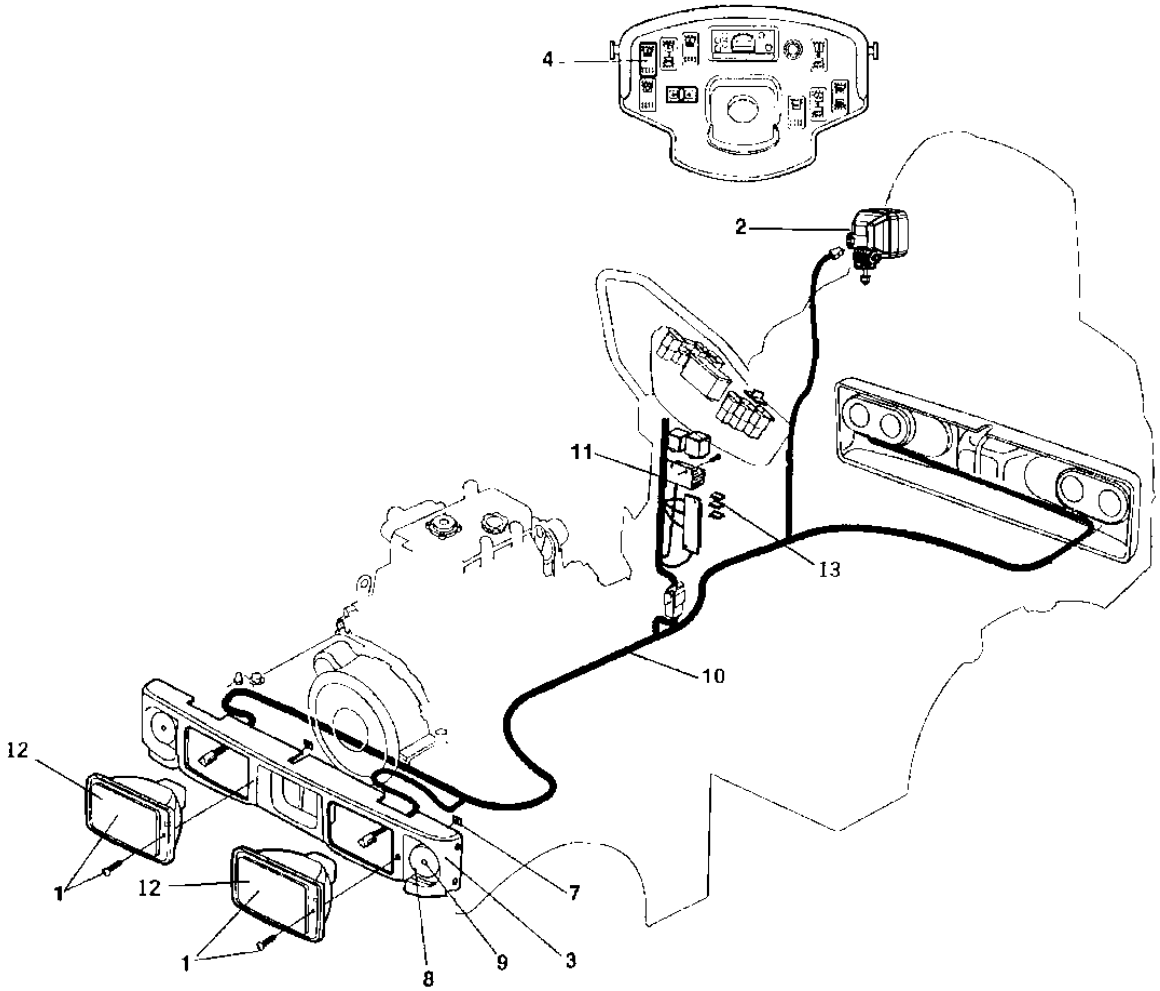

Working lights Option

Item	Part No	Rem	Qty	Description	Code
1	4700902227		2	Work light	B
			2	. Screw	
2	4812110216		1	Work lamp	C
	4700500230		1	. Screw M8-1.25x35	
	4700904230		1	. Steel plain washer	
	4700586018		1	. Hexagon lock nut M10	C
3	4700387377		1	Frame cover	D
4	4700791587		1	Switch, working light	B
7	4700791970		4	Speed nut	D
8	4700791754		N	Blind rivet	
9	4700791957		N	Reflector, white	B
10		A	1	Cable harness	
11		A	1	Cable harness	
12	4700901369	B	2	Bulb 55w H3	B
13	4700901228		2	Fuse 15A	D

A) See section "Driving lights"
B) Included in work light (p/n 4700902227)

Rotating beacon with Rops Option

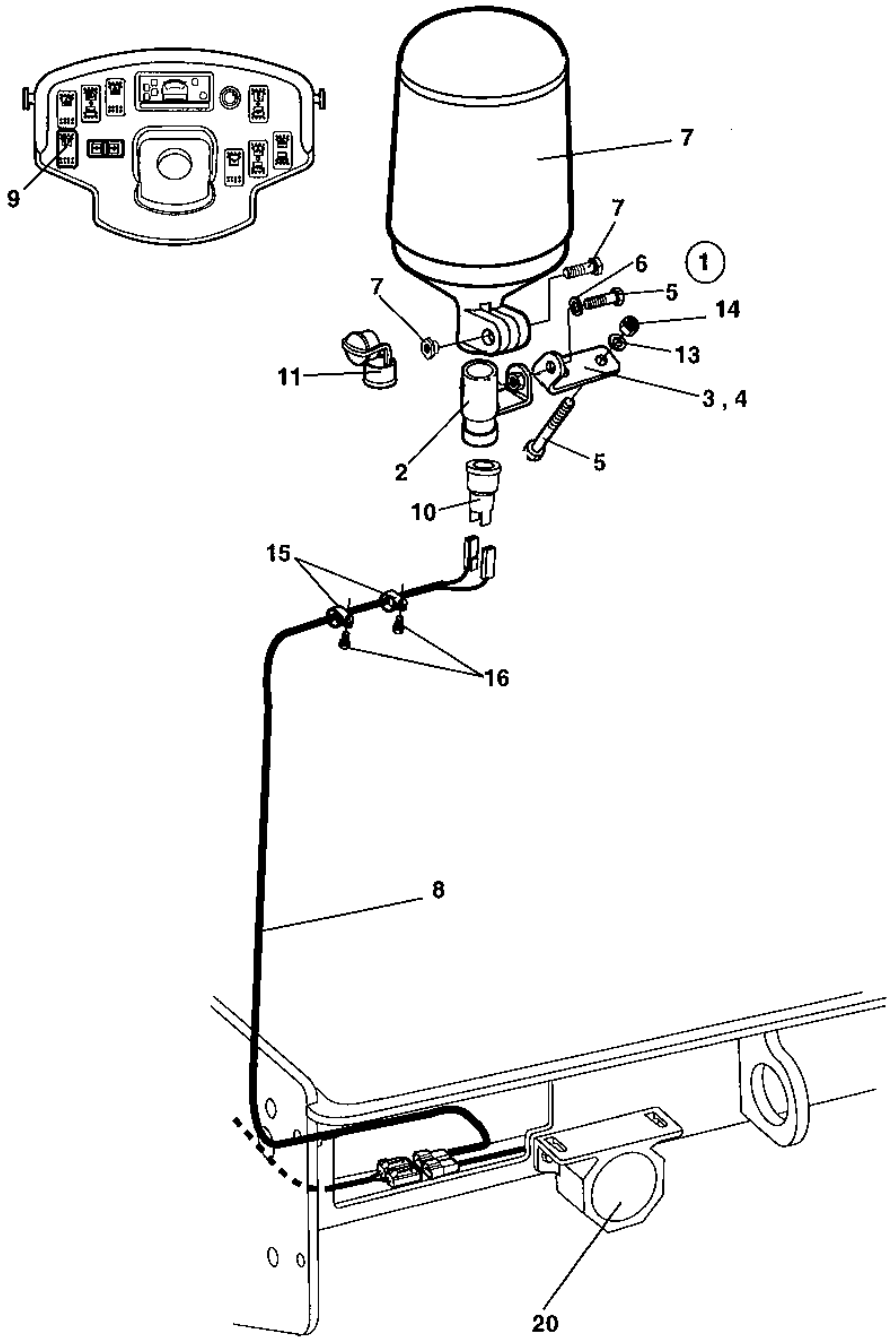

Rotating beacon with Rops Option

Item	Part No	Rem	Qty	Description	Code
1	4700389561		1	Bracket	D
2	4700388772		1	. Bracket	D
3	4700388773		1	. Bracket	D
4	4700629101		1	. Spirol pin	D
5	4700500021		1	. Screw M8-1,25x25 8.8	C
6	4700904229		1	. Steel plain washer 8,4x16x1,5	
7	4700389577		1	Rotating beacon 12V	B
			1	. Screw	
			1	. Nut	
8	4700389763		1	Cable harness	D
9	4700791585		1	Switch, rotating beacon	B
10	4700791981		1	Connector plug	C
11	4700791980		1	Rubber protection	D
12	4700500180		2	Hexagon screw m	
13	4700904229		4	Steel plain washer 8,4x16x1,5	
14	4700586003		2	Lock nut M8	
15	4700921039		2	Pipe clamp	
16	4700541702		2	Screw M6x12	C
17		B	1	Fuse	
20		A	1	Back-up alarm	

A) See section "Back up alarm"
B) See section "Control panel, relay"

Back-up alarm

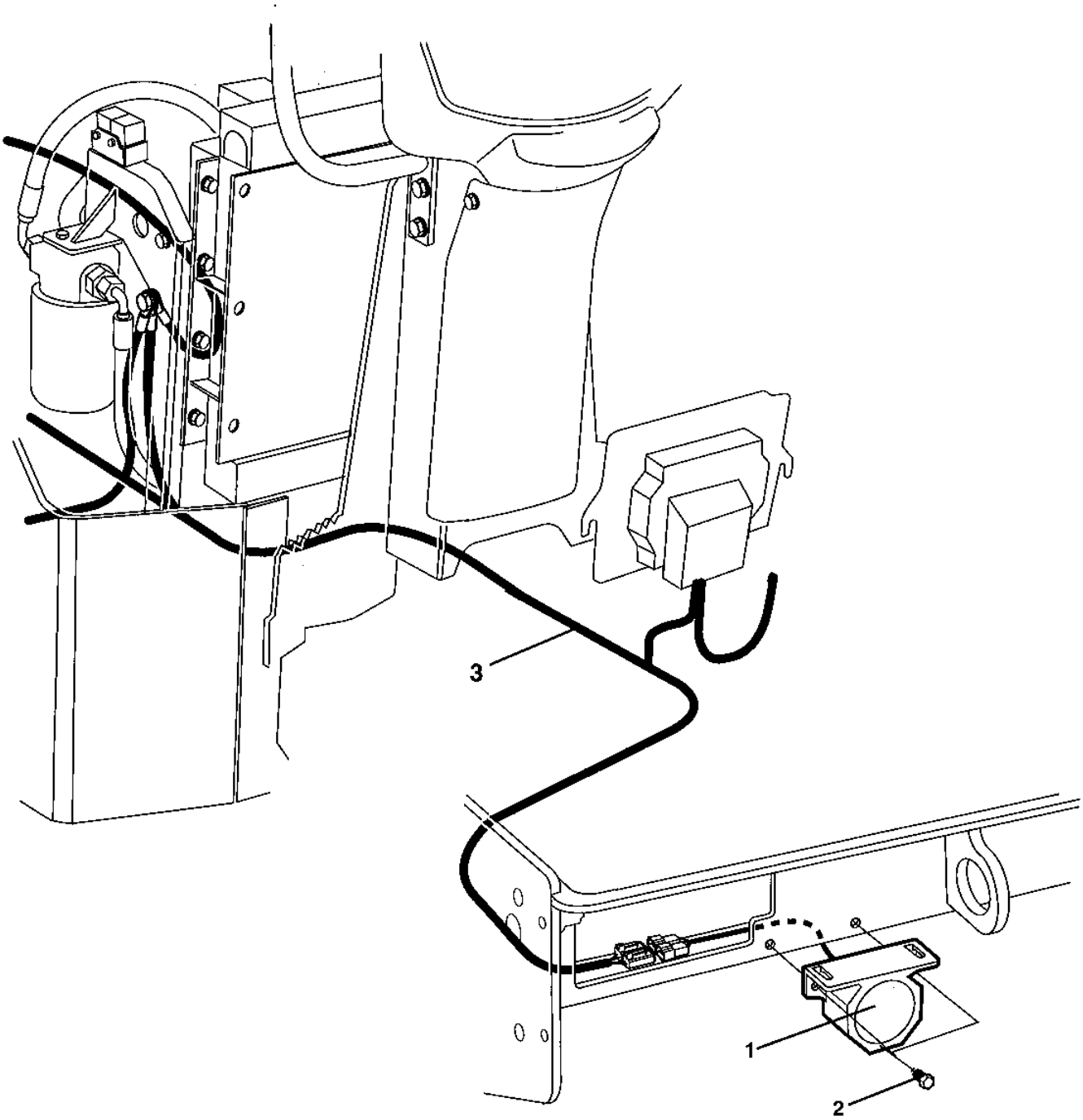

Back-up alarm

Item	Part No	Rem	Qty	Description	Code
1	4700792098		1	Back-up alarm	D
2	4700541702		2	Screw M6x12	C
3	4700388009		1	Cable harness	D

Drivers platform

Drivers platform

Item	Part No	Rem	Qty	Description	Code
16				**Drivers seat (Page 88)**	
20				**F/R- and throttle control (Page 90)**	
28	4812113676			**Forward and reverse control handle (Page 92)**	C
30				**Dual forward/reverse control Option (Page 94)**	
40				**Rops Option (Page 96)**	
50	377256			**Cup holder Option (Page 98)**	

Drivers seat

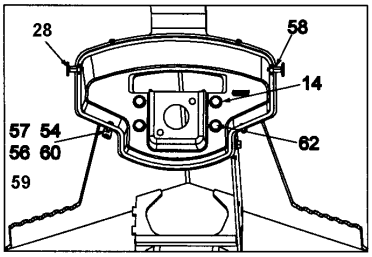

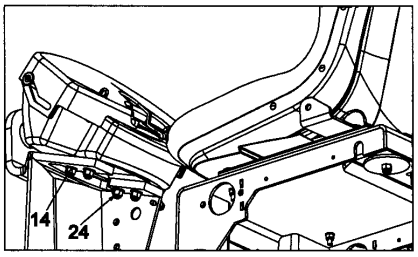

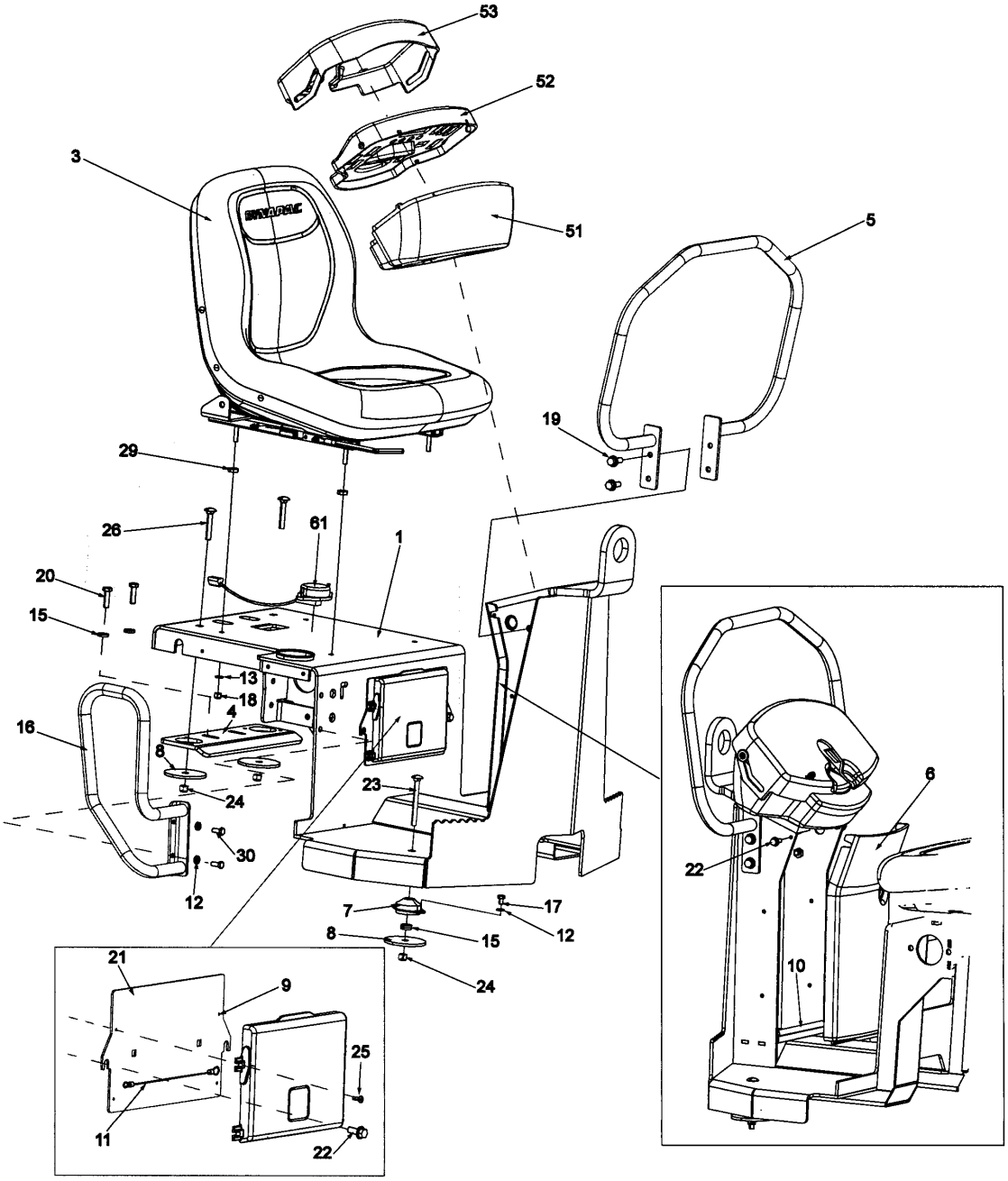

Drivers seat

Item	Part No	Rem	Qty	Description	Code
1	4700397157		1	Platform	
3	4700377518		1	Drivers seat, cpl	
	4700348331		1	Seat cover	
	4812114466		1	Drivers seat, cpl	
4	4700387236		1	Platform bracket	
5	4700387453		1	Hand rail	D
6	4700387226		1	Column cover	C
7	4700387685		4	Shock absorber	D
8	4700358232		4	Washer	C
9	4700383705		1	Instruction book holder	
10	4700902166	A	1	Edge trim	
11	4700357643	C	1	Wire	
12	4700904556		10	Washer 8,4x16x3,0	C
13	4700904229		4	Steel plain washer 8,4x16x1,5	
14	4700904230		4	Steel plain washer	
15	4700904557		10	Steel plain washer	
16	4812110761		1	Handrail	
17	4700500018		8	Screw M8-1,25x12 8,8	C
18	4700586003		4	Lock nut M8	
19	4700500509		4	Hexagon screw with flange	D
20	4700500030		6	Screw M10x035H 8.8 A3K	
21	4700388447		1	Cover	D
22	4700500505		4	Screw M8x20 8.8	
23	4700792236		2	Screw M10x100	D
24	4700586018		4	Hexagon lock nut M10	C
25	4700791226		4	Screw	
26	4700791616		2	Bolt	D
28	4700357855		2	Bushing	C
29	4700394301		4	Spacer sleeve	
30	4700500053		2	Screw M8x20H 8.8	
51	4812118686		1	Control panel	
52	4700391784		1	Control panel	D
	4700387225		1	Instrument panel	D
53	4700387227		1	Control panel cover	C
54	4700387545		1	Latch	D
55	4700357855		2	Bushing	C
56	4700904281		4	Washer 5,3x10x1 300HV	C
57	4700903658		3	Screw M5x10	C
58	4700513017		2	Screw M6x30H 10,9	C
59	4700500007		1	Screw M5-0,8x22H 8,8	C
60	4700791476		1	Nut M5 -8	C
61	4700379636		1	Seat switch	
	4700945622	D	1	Seat switch	B
62	4700500031		4	Screw	

A) L = 185 mm
C) Not shown in illustration
D) Seat switch to seat 4700377518

F/R- and throttle control

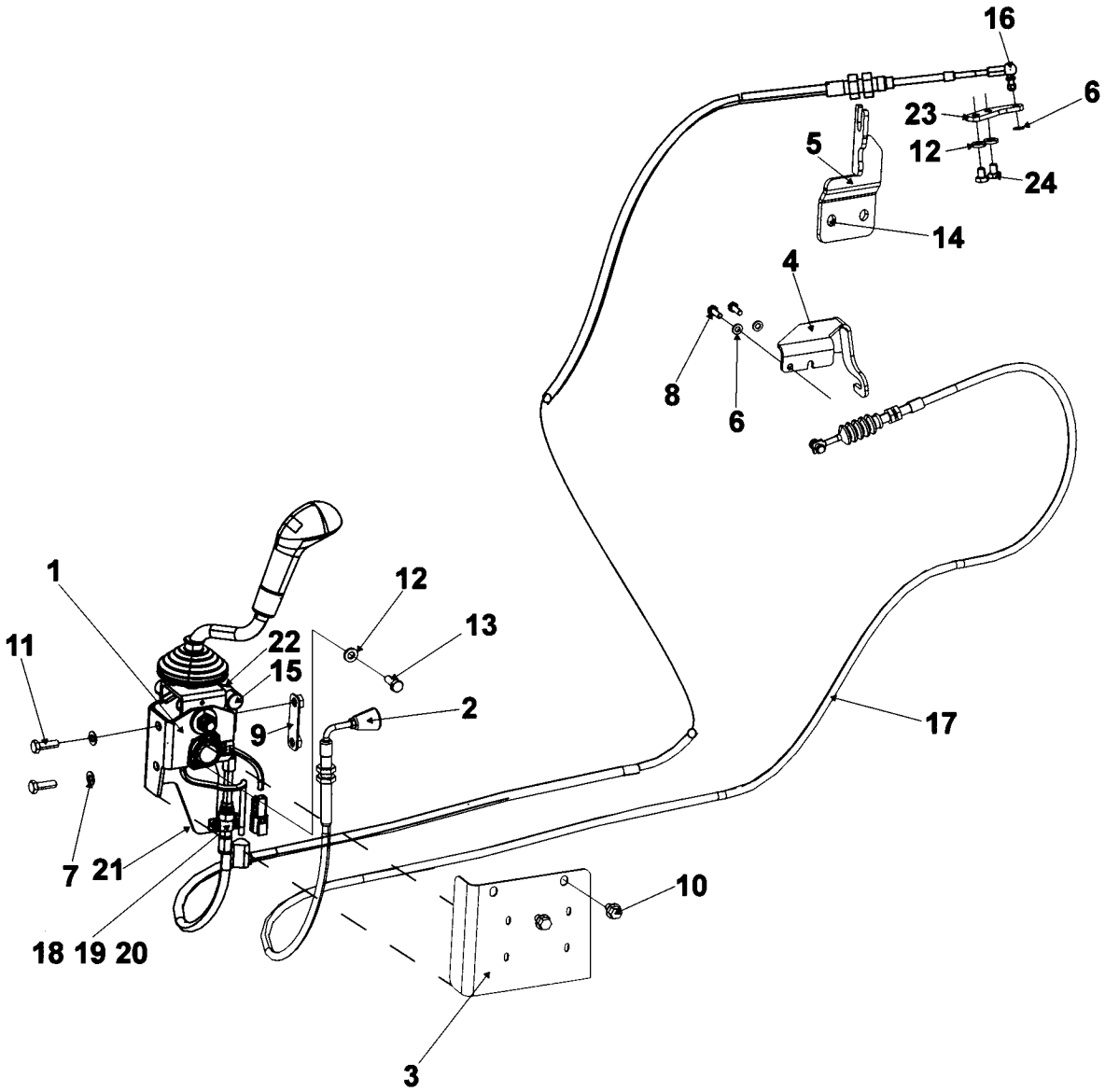

F/R- and throttle control

Item	Part No	Rem	Qty	Description	Code
2	4700387229		1	Throttle control	B
	4700940960		1	. Knob	D
3	4700388476		1	Control cover	D
4	4700395257	C	1	Control bracket	D
5	4812120650		1	Bracket	D
6	4700904228		3	Steel plain washer 6,4x12x1,5	
7	4700904229		2	Steel plain washer 8,4x16x1,5	
8	4700500013		2	Screw M6-1x16 8,8	
9	4812117990		1	Bracket	
10	4700904755		2	Screw M8x12 8,8 FZB	
11	4700500021		2	Screw M8-1,25x25 8.8	C
12	4700904556		3	Washer 8,4x16x3,0	C
13	4700500053		1	Screw M8x20H 8.8	
14		B	2	Screw	
		B	2	Washer	
15	4700377019		1	Ball joint	C
	4700950382		1	Ball stud M8	D
16	4700416034		1	Ball joint	C
17	4700377024		1	Cable Forward/Reverse	B
18	4700377020		1	Clamp	D
19	4700377021		1	Spacer	D
20	4700926537		2	Screw M5-0,8x16H 8,8	
21	4700586001	C	2	Lock nut	
22	4700586003	C	1	Lock nut M8	
23	4812120643		1	Bracket	
24	4700500042		2	Screw	

B) See section " Engine "
C) Not shown in picture

4812113676 Forward and reverse control handle

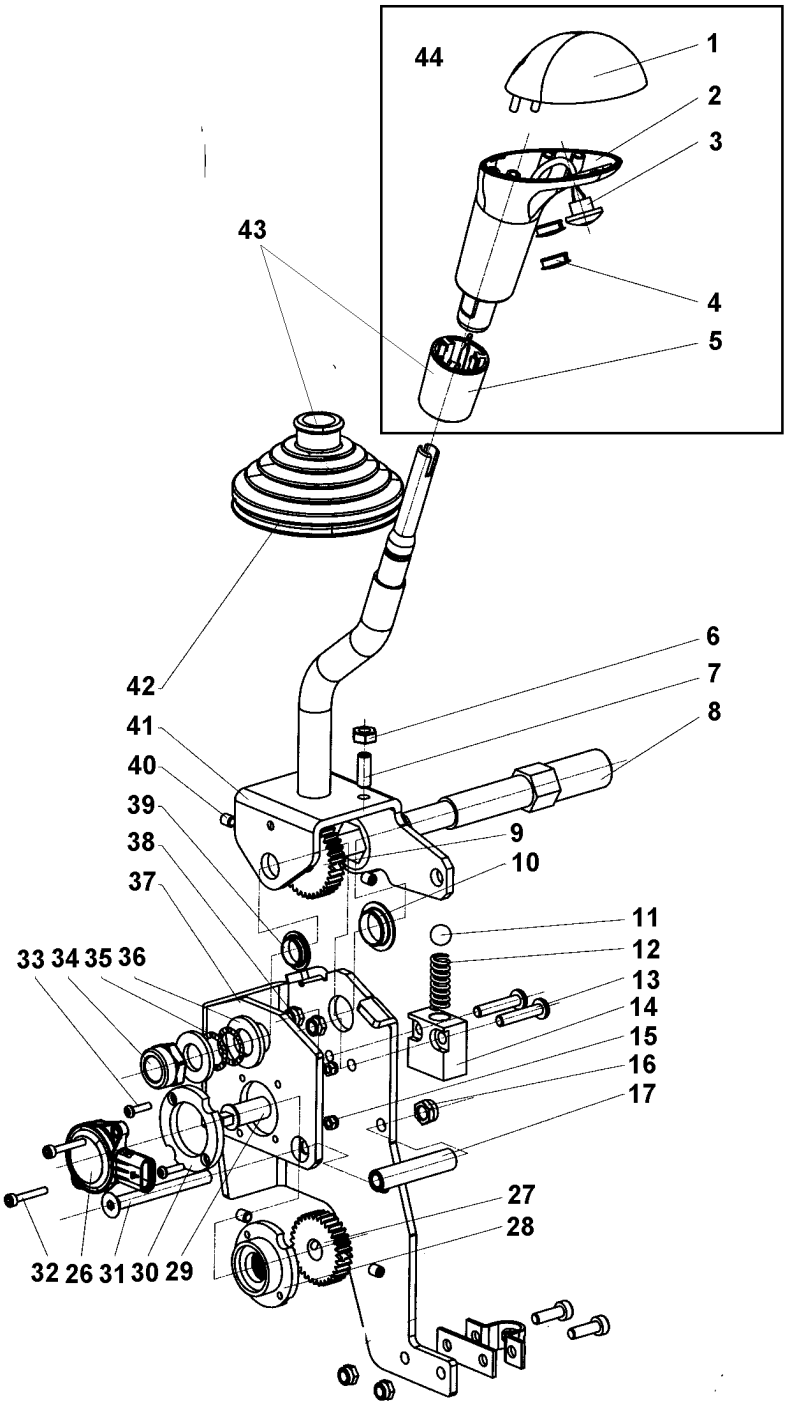

4812113676 Forward and reverse control handle

Item	Part No	Rem	Qty	Description	Code
	4812113676		1	Forward and reverse control handle	C
1	4812156558		1	. Handle top	
2	4812156559		1	. Handle	
3	4812156560		1	. Push button switch with cable	
4	4812156561		2	. Protection plug	
5	4812156562		1	. Sleeve (knob)	
6	4812159290		2	. Nut M5	
7	4812159291		2	. Screw M5	
8	4812156563		1	. Central shaft	
9	4812156564		1	. . Gear	
10	4812158258		1	. Bushing	
11	4812156565		1	. Sphere	
12	4812156566		1	. Spring	
13			2	. Screw M5	
14	4812156567		1	. Spring house	
15			4	. Lock nut M3	
16			1	. Lock nut M6	
17	4812156568		1	. Spacer	
26	4812156490		1	. Potentiometer	
27	4812156569		1	. . Gear	
28	4812156570		1	. . Internal spacer	
29	4812156571		1	. . Shaft	
30	4812156572		1	. . External spacer	
31	4812159197		1	. Screw M6	
32	4812159198		2	. Screw M3	
33	4812159199		2	. Screw M3	
34	4812159251		2	. Lock nut M12	
35	4812156573		2	. Sealing	
36	4812158260		2	. Washer	
37	4812156574		1	. Bracket	
38			2	. Lock nut M5	
39	4812158259		1	. Bushing	
40	4812159292		4	. Screw M5	
41	4812156575		1	. Lever	
42	4812156576		1	. Bellow	C
43	4812157556		1	. Bellows kit	
	4812156562		1	. _Sleeve (knob)	
_42	4812156576		1	. _Bellow	C
44	4812158267		1	Handle top + Button kit	
	4812156558		1	_Handle top	
	4812156559		1	_Handle	
	4812156560		1	_Push button switch with cable	
	4812156561		2	_Protection plug	
	4812156562		1	_Sleeve (knob)	

Dual forward/reverse control Option

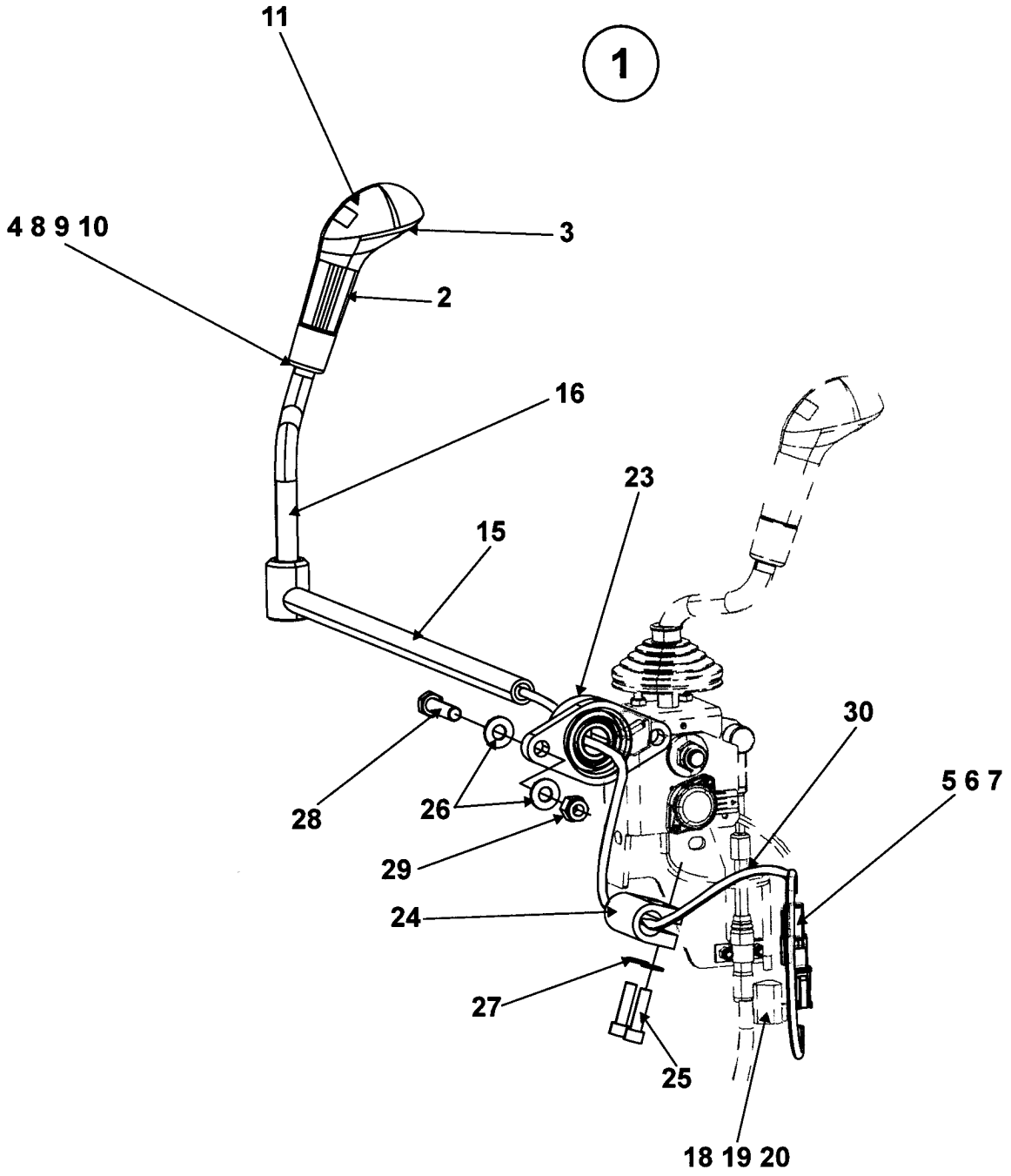

Dual forward/reverse control Option

Item	Part No	Rem	Qty	Description	Code
1	4700940374		1	Handle kit, cpl	A
2			1	. Handle	
	4700945729		1	. . Push-button switch	B
			1	. Service information	
			1	. Lock fluid	
3	4700377018		1	. Protection plug	D
4		B	1	. Nut	
5			1	. Connector, receptable	
6			1	. Lock wedge	
7			2	. Pin	
8		B	1	. Rod	
9		B	1	. Washer	
10		B	2	. Washer	
11	4700378759		1	. Handle top	D
15	4700377053		1	Control shaft	D
16	4700377055		1	Lever	D
18	4700791668		1	Connector plug	
19	4700791669		1	Lock wedge	D
20	4700903948		2	Socket	
23	4700791926		1	Y-bearing unit	D
24	4700346420		1	Coupling	D
25	4700904229		2	Steel plain washer 8,4x16x1,5	
26	4700904230		4	Steel plain washer	
27	4700508048		2	Hexagon socket head cap screw	C
28	4700500031		2	Screw	
29	4700586018		2	Hexagon lock nut M10	C
30			1	Cable	

B) Not shown in illustration.

Rops Option

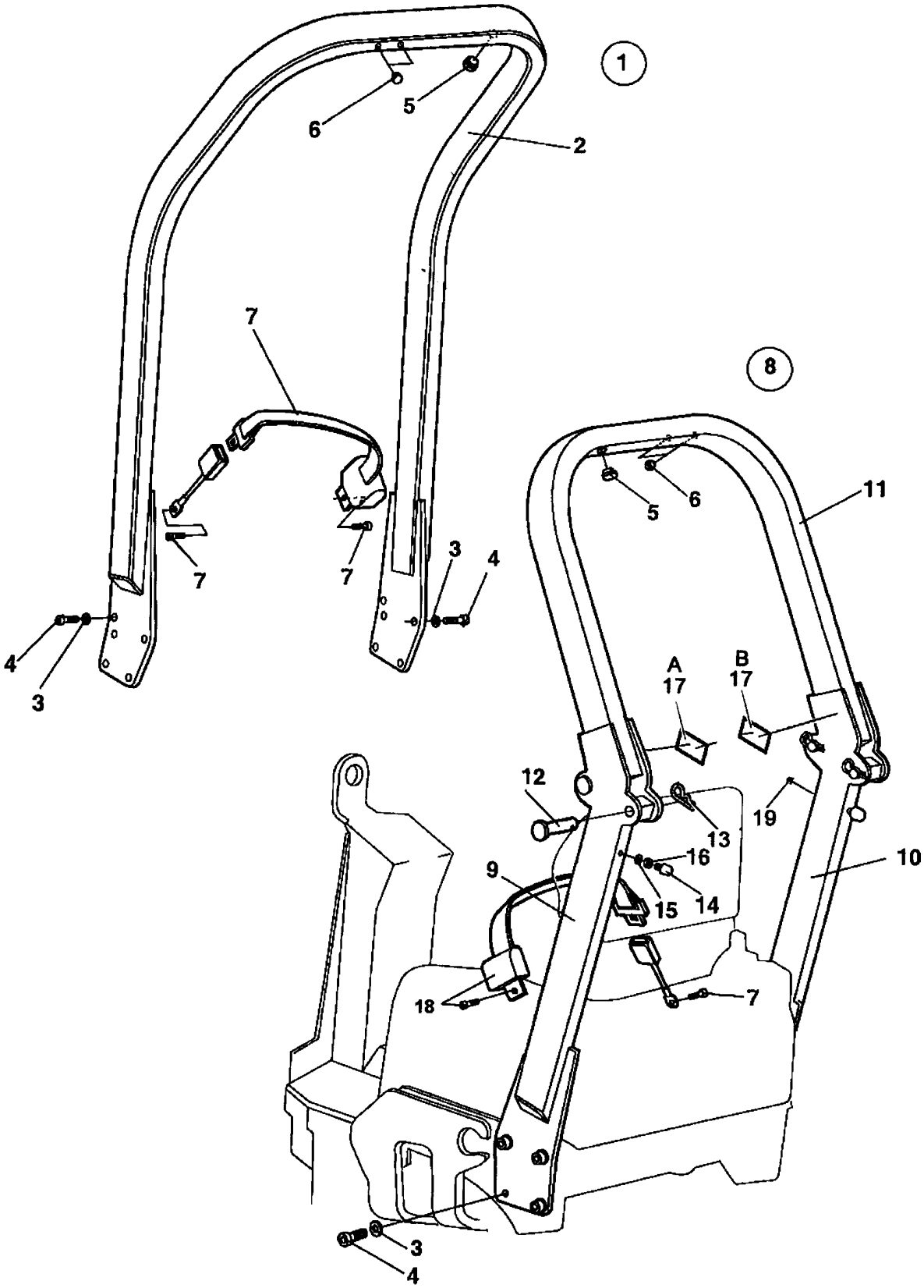

Rops Option

Item	Part No	Rem	Qty	Description	Code
1			1	Rops, cpl	
2	4700387142		1	Rops	D
3	4700904231		8	. Washer 13x24x2 300 HV	
4	4700508063		8	. Hexagon socket head cap screw	
5	4700282603		1	. Plastic plug	
6	4700900986		1	. Plug	
7	4700377677	A	1	. Seat belt 2"	B
8			1	Rops foldable, cpl	
9		C,D	1	. Rops beam	
10		C,D	1	. Rops beam	
11		C,D	1	. Rops beam	
12	4700389798		4	. Threaded spike	D
13	4700635061		4	. Hair clip	B
14	4700280101		2	. Shock absorber	
15	4700904229		2	. Steel plain washer 8,4x16x1,5	
16	4700573008		2	. Nut M8	C
17	4700908229		1	. Safety decal	
18	4700377677	A	1	. Seat belt 2"	B
19	4700926215		2	. Protective plug	

A) Hardware supplied
C) Not sold separately due to safety regulations
D) Only available as a complete ROPS kit ; please check the machine SN and contact Dynapac for valid PN

377256 Cup holder Option

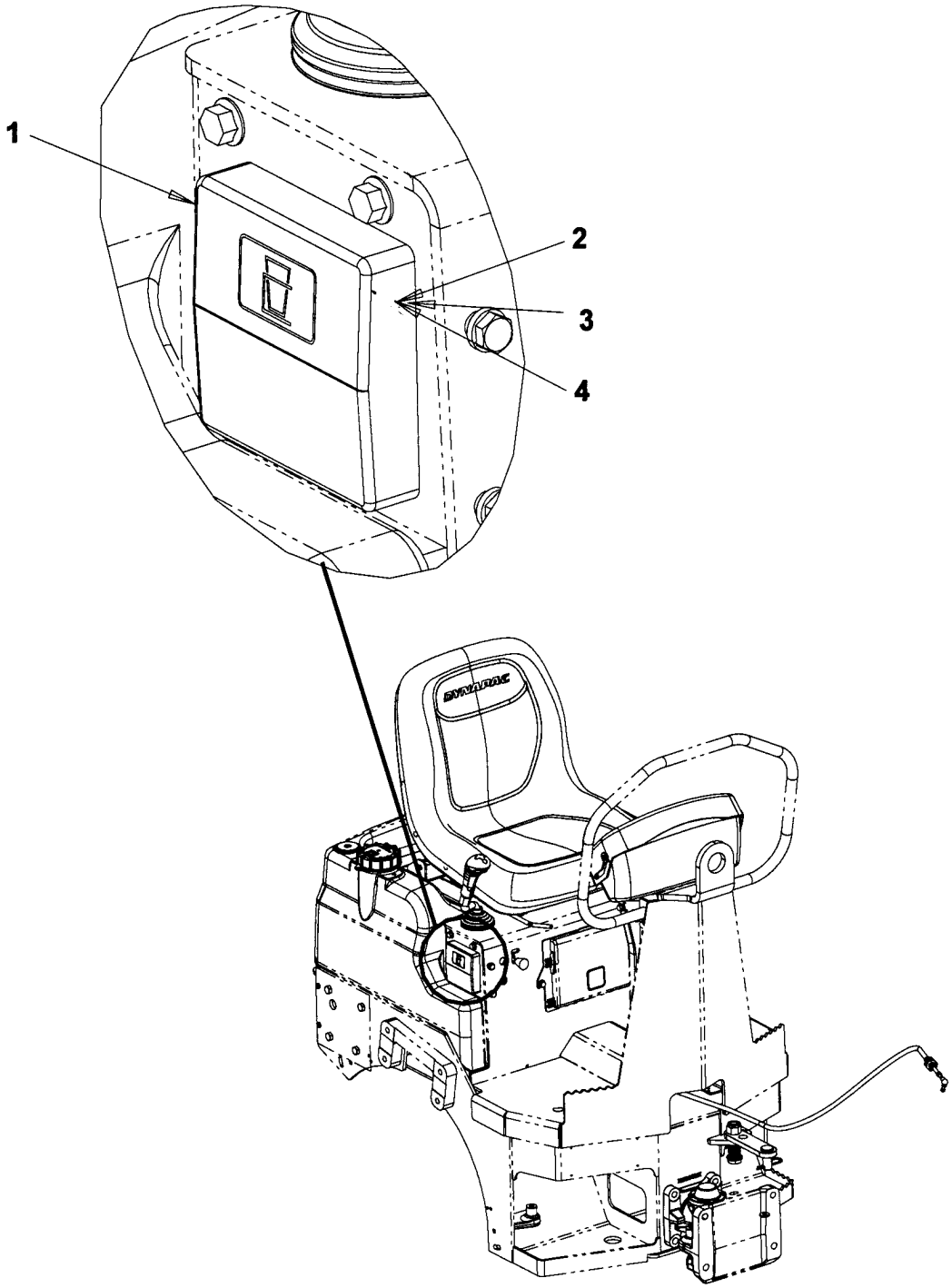

377256 Cup holder Option

Item	Part No	Rem	Qty	Description	Code
1	4700377255		1	Cup holder	D
2	4700513027		4	Screw M4x16H 10,9	D
3	4700904281		4	Washer 5,3x10x1 300HV	C
4	4700923976		4	Nut	C

https://truckmanualshub.com/

Decals and documentation

Item	Part No	Rem	Qty	Description	Code
1				**Decals and documentation (Page 102)**	

Decals and documentation

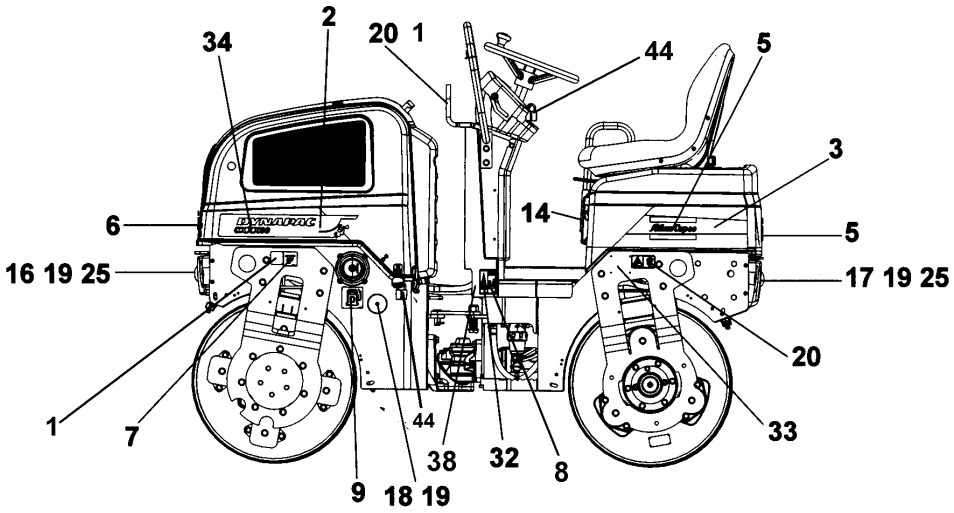

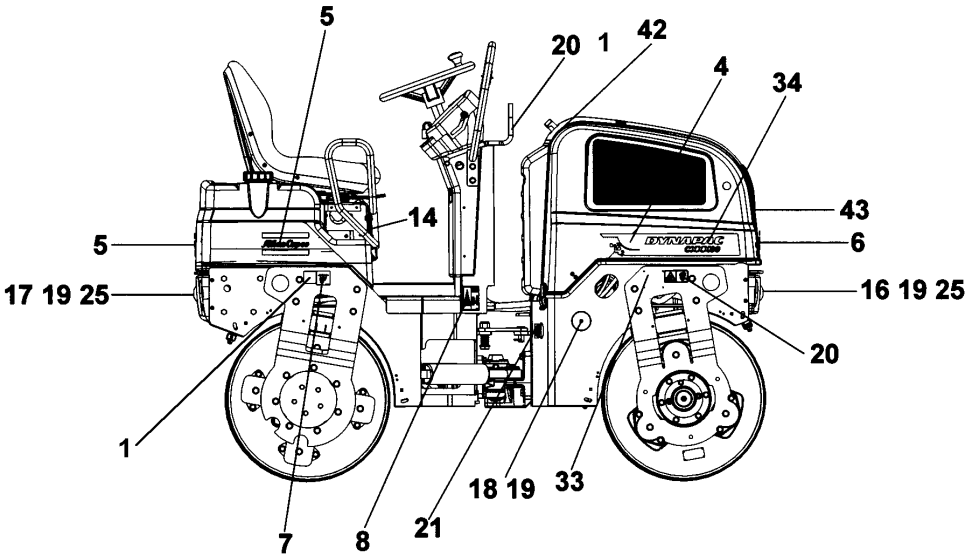

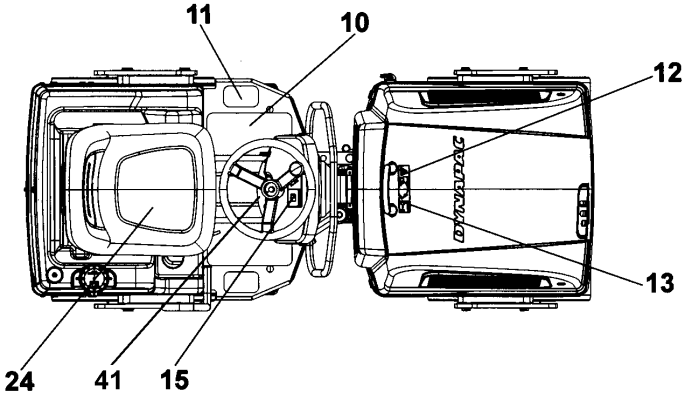

Decals and documentation

Item	Part No	Rem	Qty	Description	Code
1	4700357587		3	Decal "LIFT POINT"	D
2	4812120093		1	Decal "Compaction rocks" Left	D
3	4812120078		1	Decal Rear	D
4	4812120092		1	Decal "Compaction rocks" Right	
5	4812120119	B	3	Decal "Atlas Copco" Black	D
6	4812120125	C	1	Decal "Atlas Copco" White	
7	4700382751		2	Decal "TIE DOWN POINT"	
8	4700903422		2	Decal "SAFETY"	
9	4700991658		1	Decal "FUEL"	
10	4700373363		2	Slip protection	
11	4700372123		2	Protection	D
12	4700903423		1	Decal "SAFETY"	
13	4700903424		1	Decal "HOT SURFACE"	
14	4700903425		1	Decal "SAFETY MANUAL"	
15	4700903459		1	Decal "SAFETY"	
16	4700791957		2	Reflector, white	B
17	4700791956		2	Reflector, red	
18	4700791958		2	Reflector, light	D
19	4700791666		6	Blind rivet	C
20	4700908229		3	Safety decal	
21	4700272373		1	Decal "HYDRAULIC OIL"	
24	4700348331		1	Seat cover	
25	4700904228		4	Steel plain washer 6,4x12x1,5	
32			1	Product identif. decal "Dynapac"	
33	4700904870		2	Lifting sign	
34	4812120412		2	Decal "MODEL CODE" CC1000	D
37	4700624015		12	Blind rivet 4,0x8,5	D
38	4700791272		1	Decal "Sound power level" 102dB, Option	D
41	4700379012		1	Decal "Start instruction"	D
42	4811000351	D	1	Decal "SAFETY"	
43	4700791642	A	2	Decal "WARNING" Use of starting fluid prohib.	
44	4700358881		2	Pad lock	

A) Also placed on air filter (not shown in illustration)
B) H = 80 mm
C) H = 66 mm
D) Only available on machines equipped with ROPS.

Standard equipment

Standard equipment

Item	Part No	Rem	Qty	Description	Code
10				**Standard equipment (Page 106)**	

Standard equipment

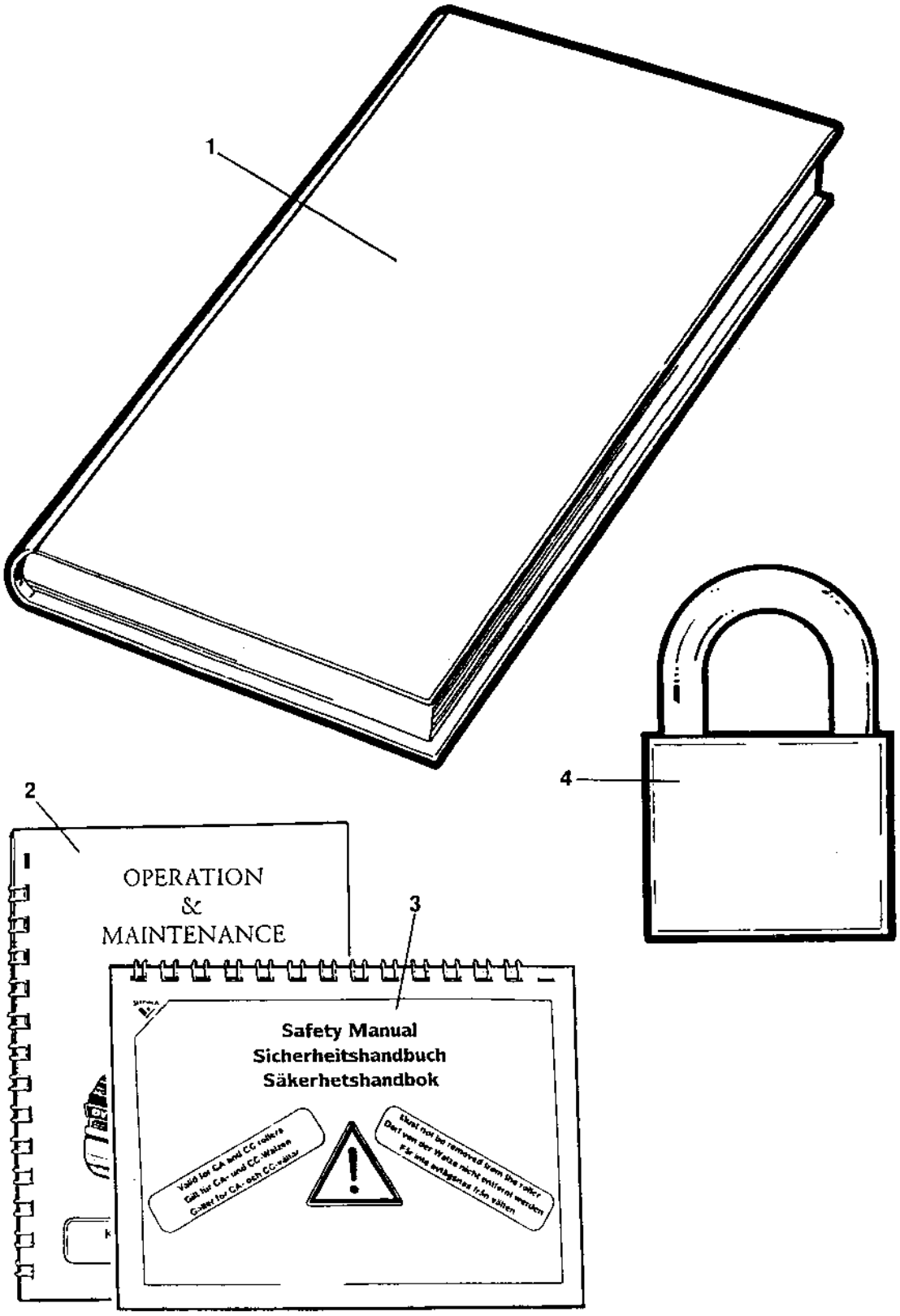

Standard equipment

Item	Part No	Rem	Qty	Description	Code
1			1	Documentation ISCC1000	
			1	Warranty conditions	
			1	Warranty registration certificate	
			1	Spare parts catalogue 48121560051	
			1	Warranty registration card	
			1	Instruction manual Perkins 403D-11	
2			1	Operation / maintenance instruction 4812161600	
3			1	Safety manual RSAFE	
4	4700358881		2	Pad lock	

Optional equipment

Optional equipment

Item	Part No	Rem	Qty	Description	Code
15				**Battery disconnector (Page 110)**	
20				**Water tank, option (Page 112)**	
60				**SMV-sign (Page 114)**	
63				**SMV-sign Mounting on watertank (Page 116)**	
64				**SMV-sign on high water tank (Page 118)**	
65				**Registrations - plate with light (Page 120)**	
70				**Hydraulic vibration, shut off front/rear drum (Page 122)**	
81				**Rear view mirror (Page 126)**	
90				**Tool equipment (Page 128)**	

Battery disconnector

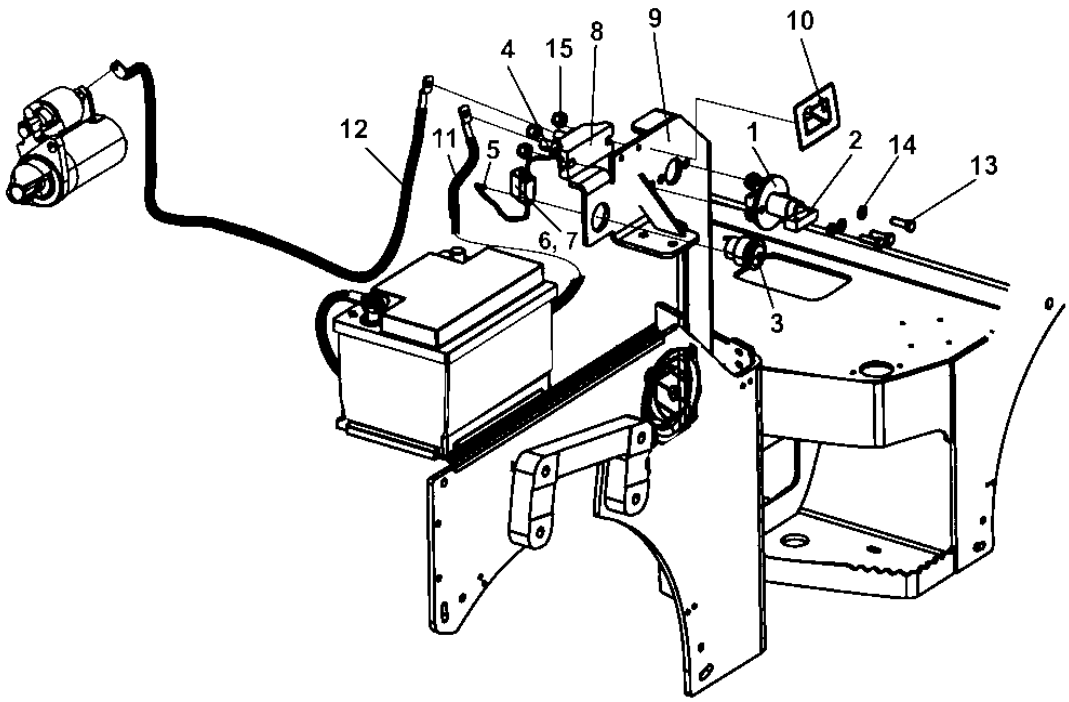

Battery disconnector

Item	Part No	Rem	Qty	Description	Code
1	4700357567		1	Battery switch, cpl	D
2	4700902560		1	. Handle	D
3	4812110560		1	Power socket 12V 16A	D
4	4700960041		1	Ring terminal	
5	4812117025		1	Connector	D
6	4700904015		1	Fuse holder	D
7	4700901227		1	Fuse 10A	B
8	4700377058		1	Connection block	D
9	4812110974		1	Cooler console	
10	4700904835		2	Decal "BATTERY POWER"	
11		C	1	Battery cable	
12		D	1	Cable	
13		B	3	Screw	
14		B	3	Washer	
15		B	3	Nut	

B) Use existing
C) Cable from positive pole of the battery.
D) Cable from starter motor.

Water tank, option

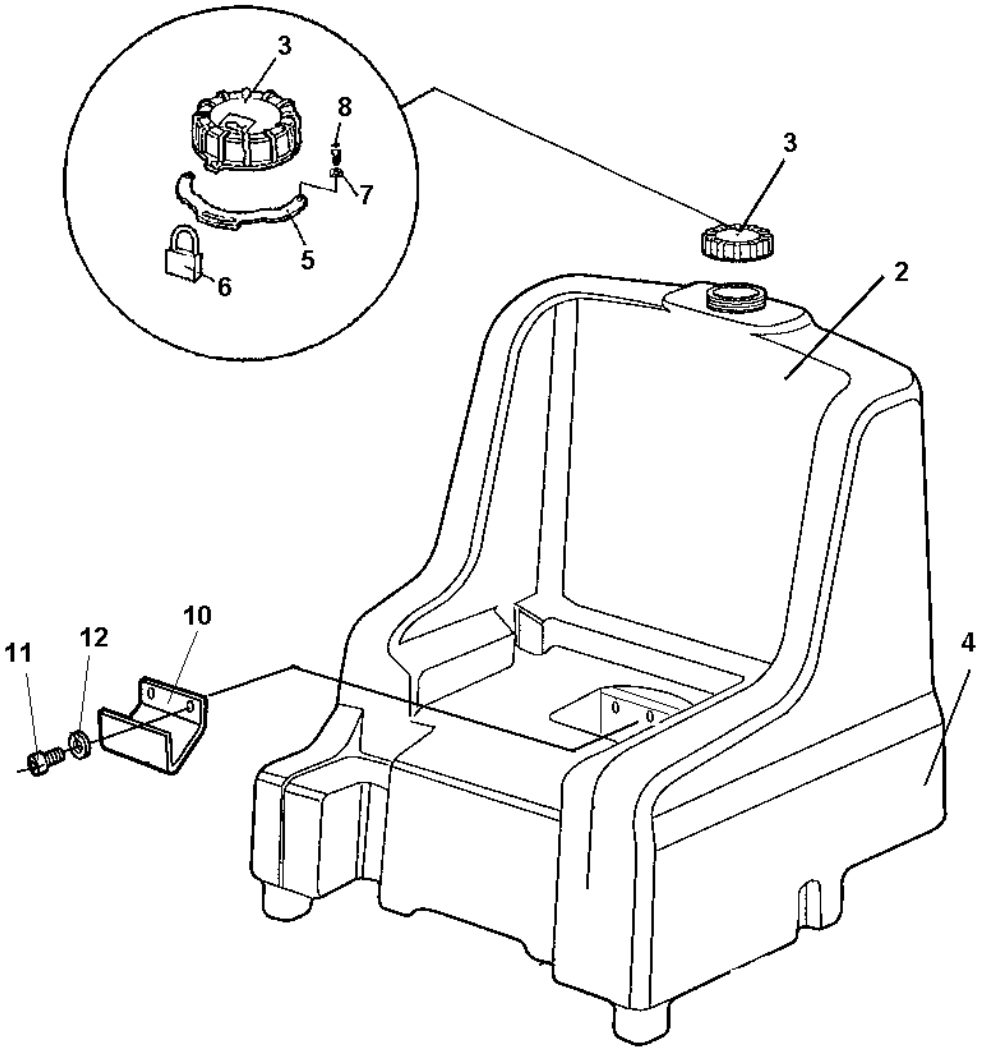

Water tank, option

Item	Part No	Rem	Qty	Description	Code
1				Water tank, cpl	
2	4700388017		1	. Water tank	D
3	4700388087		1	. Tank cap	D
4	4700377343			Decal	D
5	4700389155	A	1	Lock bracket	D
6	4700358881	A	1	Pad lock	
7	4700904281	A	2	Washer 5,3x10x1 300HV	C
8	4700903658	A	2	Screw M5x10	C
10	4700387935		1	Bracket	D
11	4700500029		2	Hexagon head screw	
12	4700904557		2	Steel plain washer	

A) Option,

SMV-sign

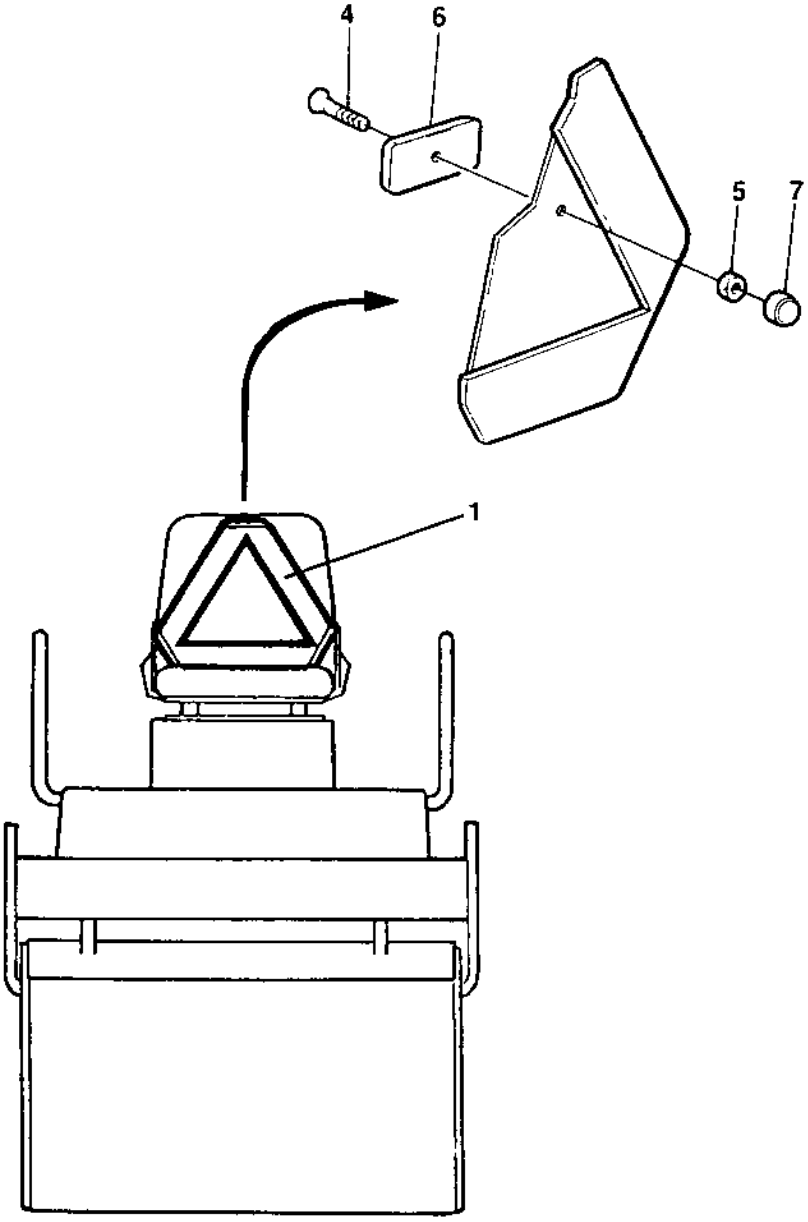

SMV-sign

Item	Part No	Rem	Qty	Description	Code
1	4700476019		1	SMV-sign	D
4	4700513013	A	2	Screw	C
5	4700570005	A	2	Nut M8	C
6	4700374460	A	2	Spacer	D
7	4700904203	A	2	Nut protection	

A) On seats with armrests use existing

SMV-sign Mounting on watertank

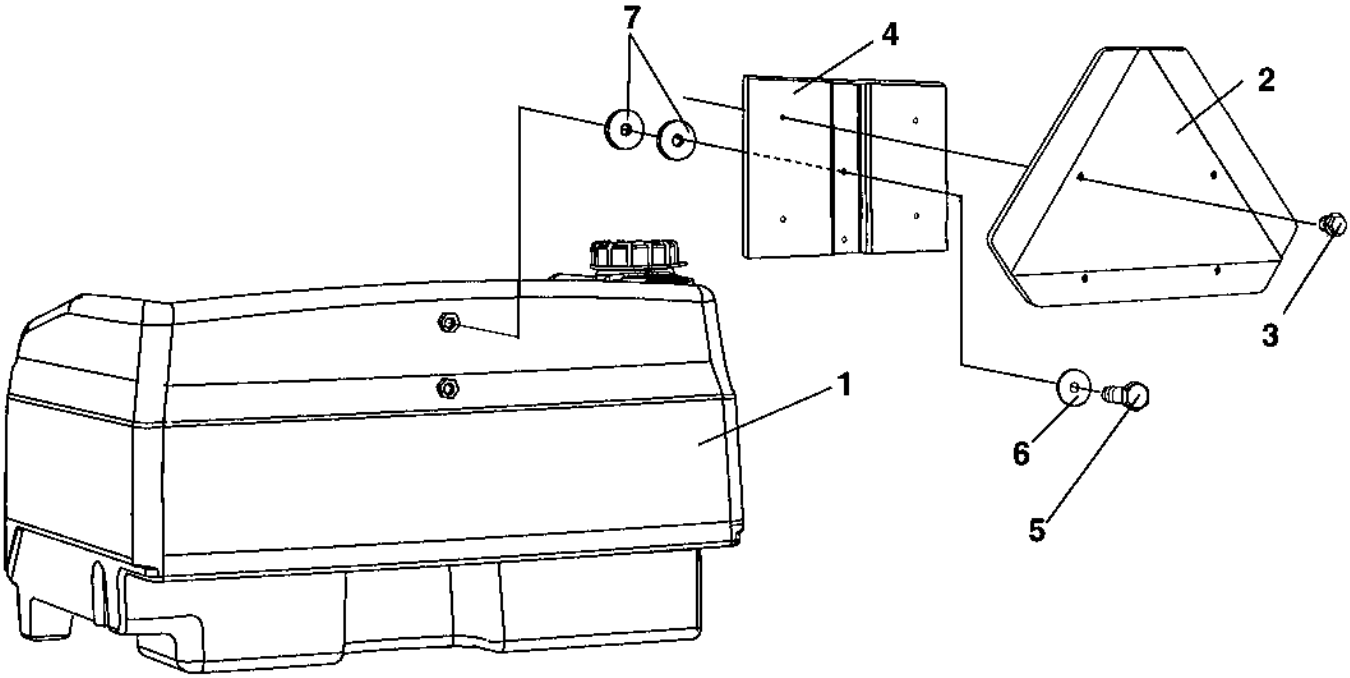

SMV-sign Mounting on watertank

Item	Part No	Rem	Qty	Description	Code
1			1	Water tank	
2	4700476019		1	SMV-sign	D
3	4700903782		4	Screw M5x12	C
4	4700391920		1	Holder	D
5	4700500006		2	Screw M5x16	C
6	4700927974		2	Washer	
7	4700904735		4	Washer	C

SMV-sign on high water tank

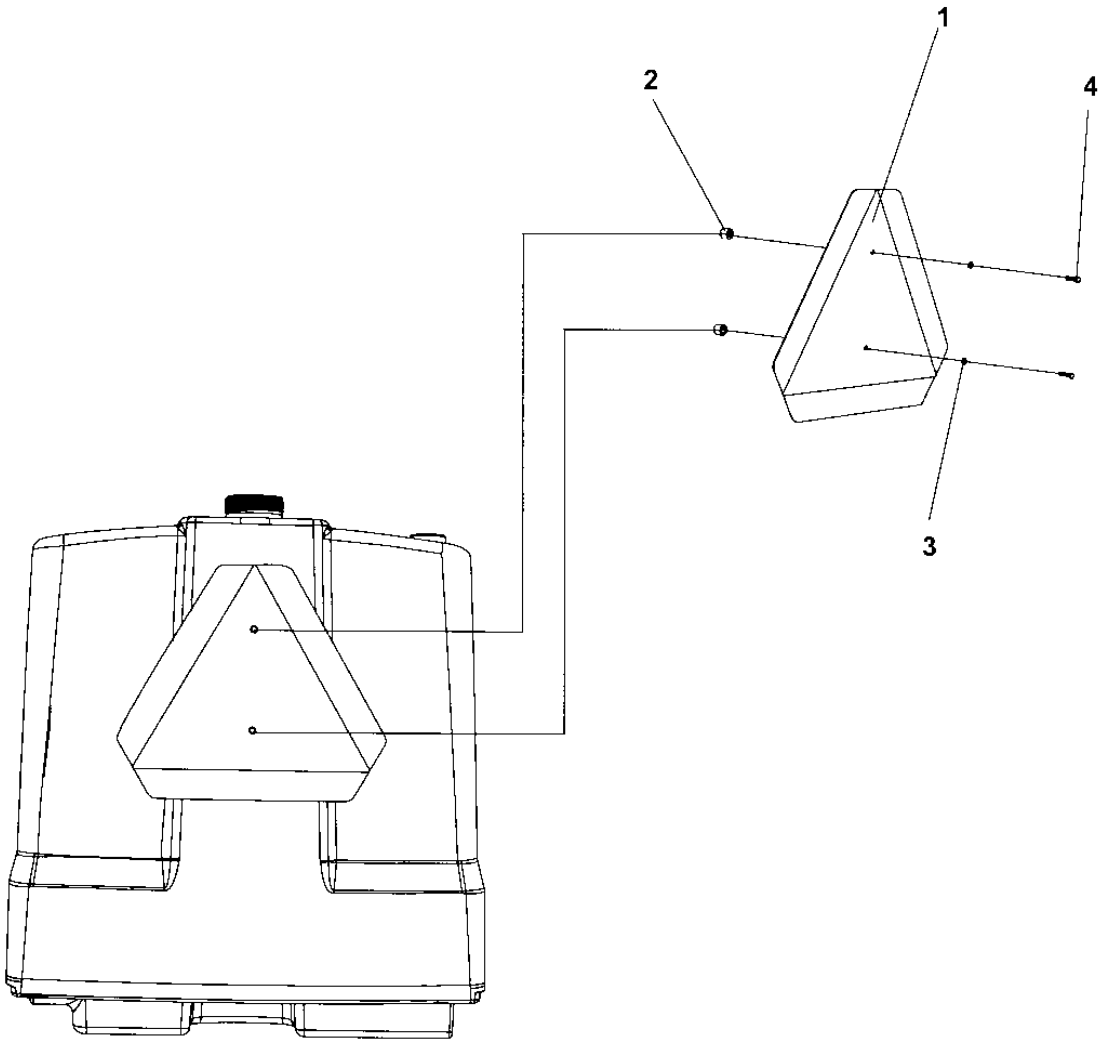

SMV-sign on high water tank

Item	Part No	Rem	Qty	Description	Code
1	4700476019		1	SMV-sign	D
2	4700371728		2	Spacer sleeve	
3	4700904281		2	Washer 5,3x10x1 300HV	C
4	4700500007		2	Screw M5-0,8x22H 8,8	C

Registrations - plate with light

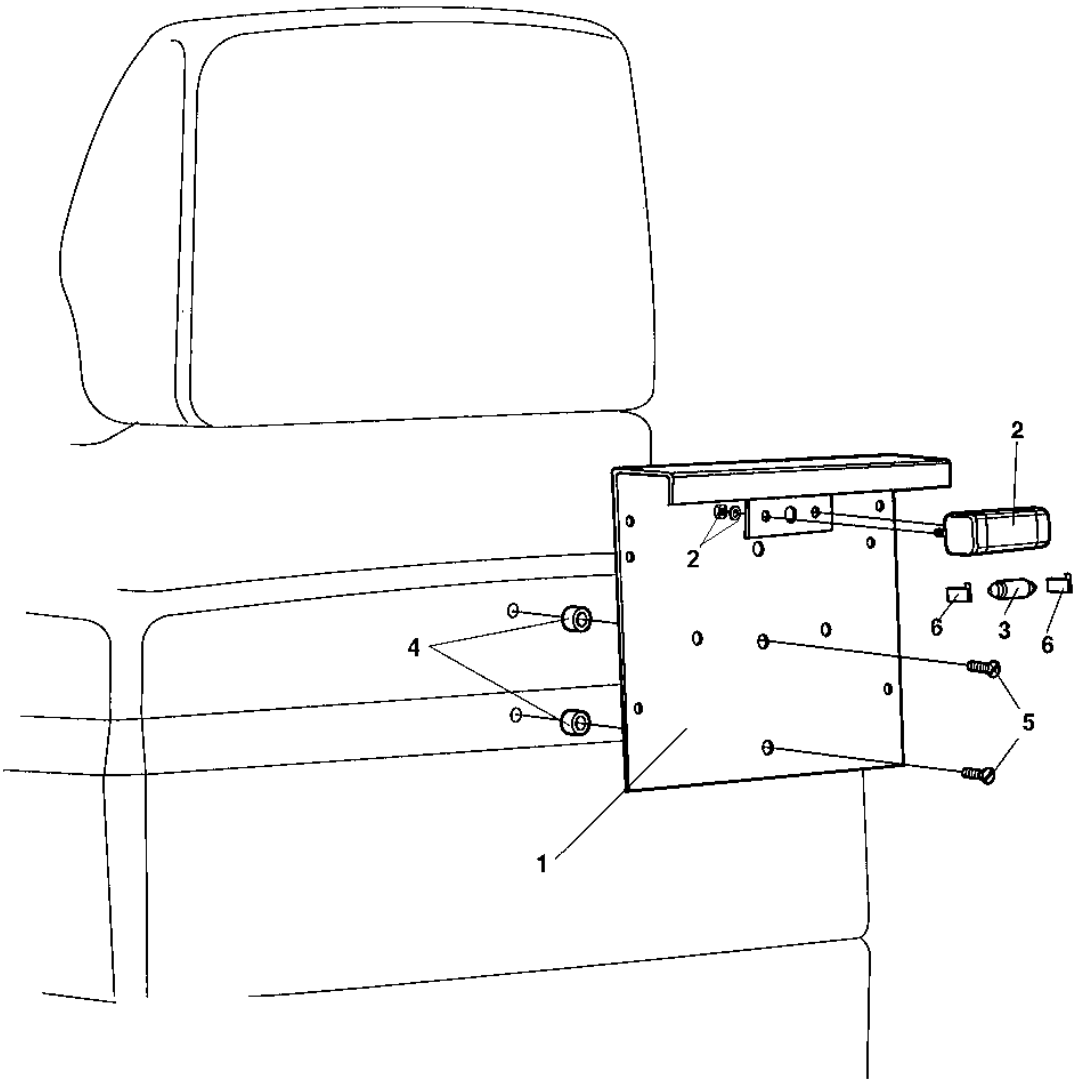

Registrations - plate with light

Item	Part No	Rem	Qty	Description	Code
1	4700355797		1	Licence plate holder	
2	4700929455		1	Licence plate light	D
			2	. Washer	
			2	. Nut	
3	4700985013		1	Bulb 12V,5W	B
4	4700371728		2	Spacer sleeve	
5	4700535008		2	Screw M5x20	C
6	4700792035		2	Push-on terminal	

Hydraulic vibration, shut off front/rear drum

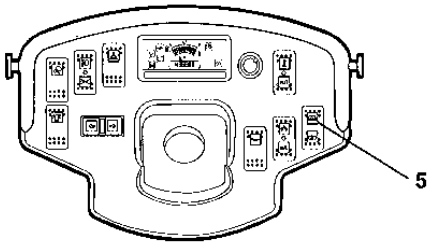

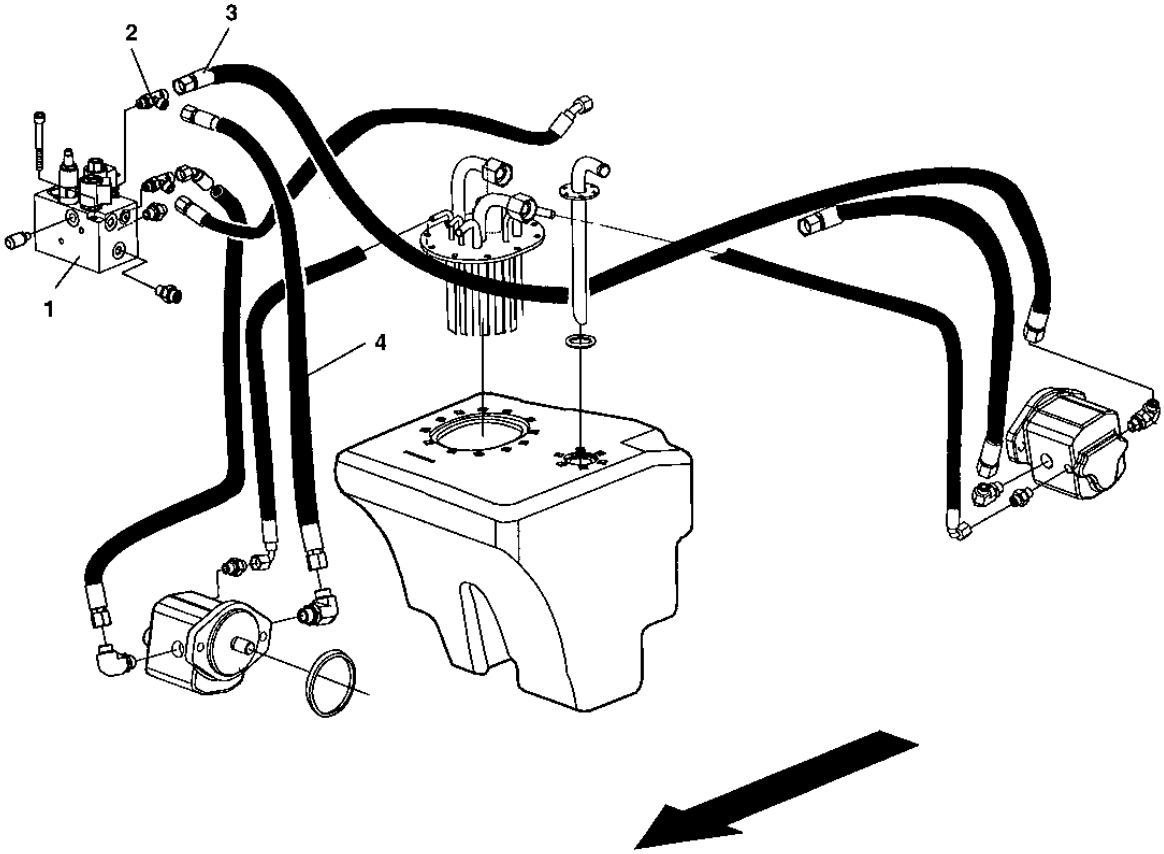

Hydraulic vibration, shut off front/rear drum

Item	Part No	Rem	Qty	Description	Code
1	4700387276		1	**Combination valve (Page 124)**	
2	4700791700		1	Tee-connector	D
3	4700483693		1	Hydraulic hose	D
4	4700483670		1	Hydraulic hose	D
5	4700791581		1	Switch	D

4700387276 Combination valve

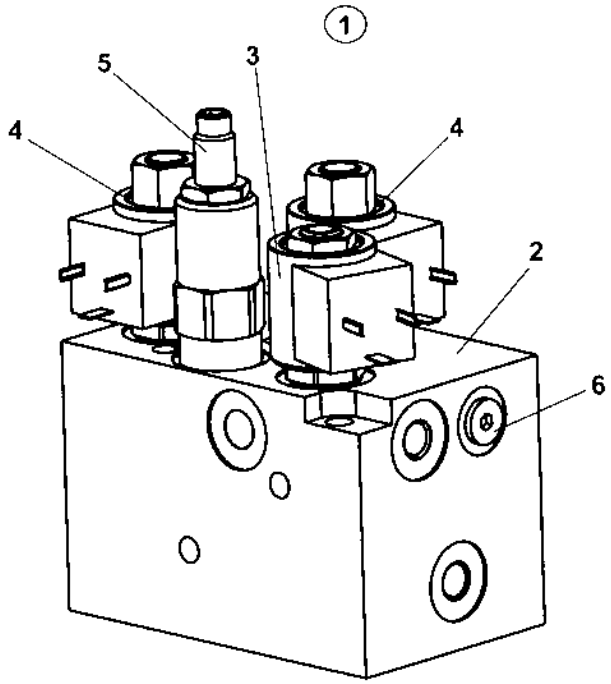

4700387276 Combination valve

Item	Part No	Rem	Qty	Description	Code
1	4700387276		1	**Combination valve (Page 124)**	
2			1	. Valve block	
3	4700940885		1	. Solenoid valve	C
	4700940887		1	. Coil	B
4	4700940886		2	. Solenoid valve	C
	4700940887		2	. Coil	B
5	4700940888		1	. Valve	C
6			3	. Plug	

Rear view mirror

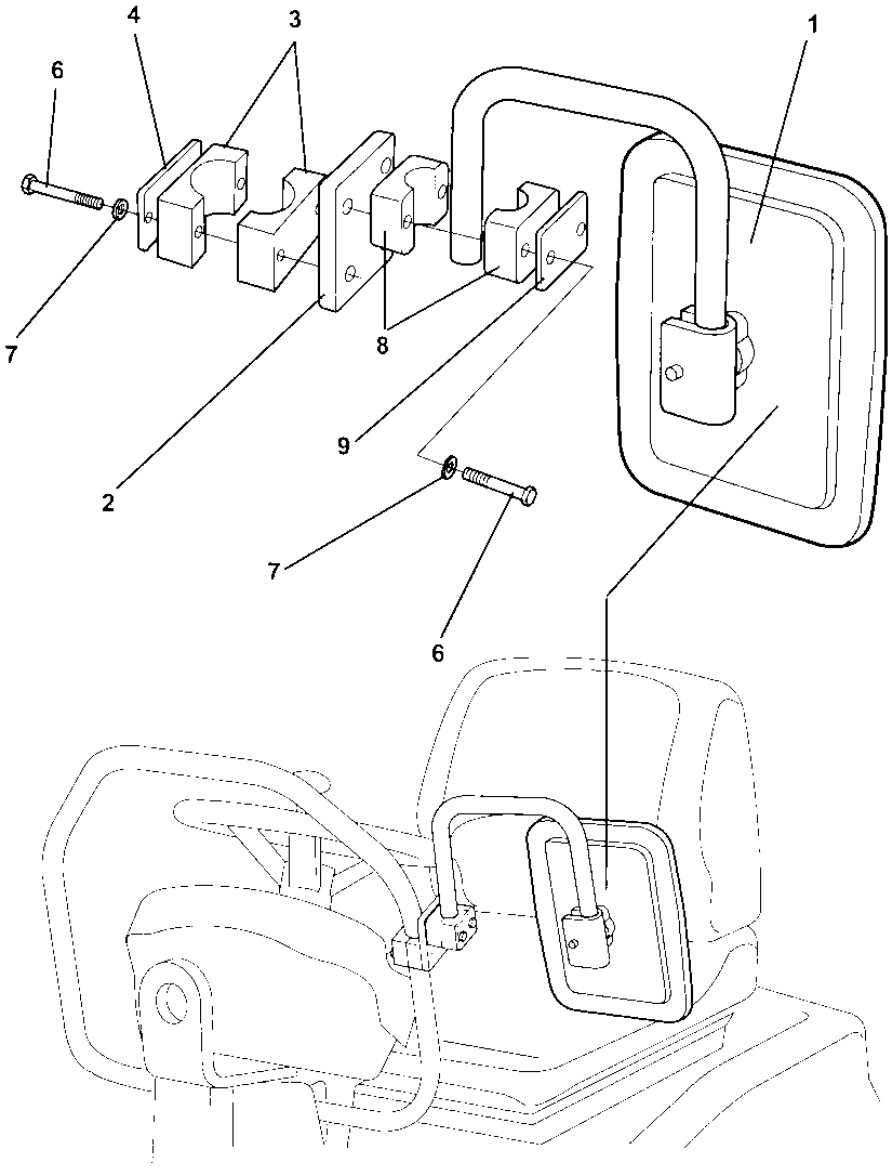

Rear view mirror

Item	Part No	Rem	Qty	Description	Code
1	4700393204		1	Rear mirror	C
2	4812110283		1	Bracket	D
3	4700902496		1	Clamp	D
4	4700923859		1	Cover plate	C
6	4700500079		4	Screw M6-1x50 8,8	
7	4700904228		4	Steel plain washer 6,4x12x1,5	
8	4700791453		1	Pipe clamp block	
9	4700791454		1	Cover plate	

Tool equipment

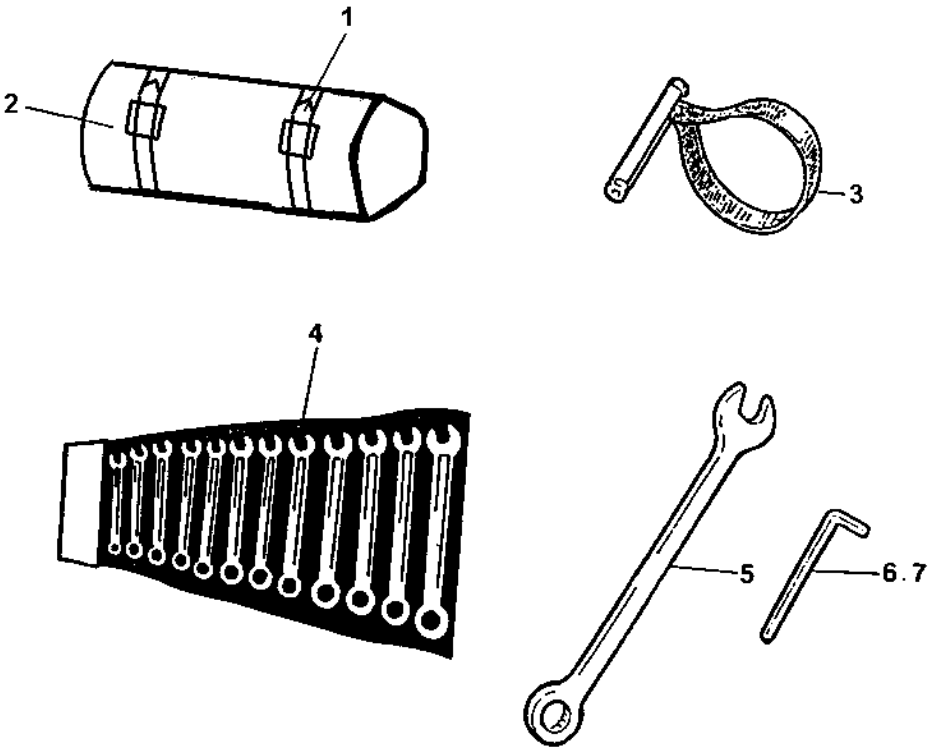

Tool equipment

Item	Part No	Rem	Qty	Description	Code
1	4700792061		2	Strap	D
2	4700277992		1	Tool bag	D
3	4700902610		1	Belt pliers	D
4	4700901212	A	1	Open end spanner	
5	4700485177		1	Wrench 6"	D
6	4700485034		1	Allen wrench 4 mm	D
7	4700792060		1	Allen wrench 3 mm	D

A) Kit

https://truckmanualshub.com/

NUMERICAL INDEX

Part Number	Page
377256	87,99
4700111018	23,39
4700160032	61
4700160058	19,29
4700160101	61
4700160132	21,23,39
4700160313	35
4700162015	61
4700162017	39
4700202042	77
4700205067	61
4700232160	61
4700238158	77
4700272373	103
4700277992	129
4700280101	97
4700282603	97
4700283711	61
4700287713	35
4700288129	51
4700297018	33
4700313001	45,59
4700313002	35
4700313008	61
4700313010	51
4700313023	49
4700313035	45,61
4700313075	45,49
4700313102	59,67
4700313108	49,59,61
4700343490	39
4700343744	39
4700346420	95
4700348331	89,103
4700349202	39
4700349332	27
4700350029	39
4700355704	75
4700355797	121
4700355869	67
4700357138	9,11,61
4700357139	61
4700357567	111
4700357587	103
4700357643	89
4700357855	89
4700358232	89
4700358666	39
4700358689	39
4700358846	35
4700358881	35,103,107,113
4700359043	31
4700371728	119,121
4700371785	45
4700372123	103
4700372964	67
4700373363	103
4700374460	115
4700376554	7,9,11,43
4700376555	7,9,11,49
4700376636	67
4700376637	7,11,67
4700376770	43
4700376771	43
4700376772	43
4700376861	67
4700376876	35
4700377018	95
4700377019	91
4700377020	91
4700377021	91
4700377024	91
4700377044	33
4700377053	95
4700377055	95
4700377058	75,111
4700377061	33
4700377063	75
4700377139	77
4700377140	79
4700377255	99
4700377343	113
4700377518	89
4700377520	43
4700377610	27
4700377611	35
4700377621	27,29
4700377677	97
4700378178	31
4700378759	95
4700378932	77
4700379009	35
4700379012	103
4700379636	89
4700379753	35
4700380343	61
4700382751	103
4700383705	89
4700385599	77
4700386241	39
4700386619	39
4700386620	39
4700386622	39
4700386627	39
4700386867	39
4700386893	45
4700386951	51
4700386963	45
4700387039	31
4700387043	31
4700387055	27
4700387056	27
4700387097	47
4700387099	45
4700387100	45
4700387118	51
4700387137	39
4700387142	97
4700387148	33
4700387151	33
4700387154	33
4700387200	51
4700387201	47
4700387205	45
4700387225	89
4700387226	89
4700387227	89
4700387229	91
4700387236	89
4700387270	55,57
4700387274	67,69
4700387275	67,71
4700387276	123,125
4700387277	67
4700387278	61
4700387279	49
4700387287	45
4700387348	31
4700387349	31
4700387350	17,31
4700387376	27
4700387377	79,81
4700387378	79
4700387424	15,27
4700387425	27
4700387428	45
4700387453	89
4700387545	89
4700387552	49
4700387597	55
4700387598	55
4700387676	55
4700387677	27,55
4700387678	55
4700387682	49
4700387683	77
4700387685	89
4700387695	49
4700387713	61
4700387758	61
4700387779	27
4700387886	27
4700387935	35,113
4700387947	33
4700387948	33
4700387949	27,33
4700387956	33
4700388009	85
4700388017	113
4700388087	35,113
4700388153	27
4700388171	19,29
4700388172	19,29
4700388173	19,29
4700388194	61
4700388382	79
4700388447	89
4700388476	91
4700388636	79
4700388653	61
4700388733	33
4700388737	77
4700388772	83
4700388773	83
4700388846	33
4700388849	27

NUMERICAL INDEX

Part Number	Page
4700388850	27
4700388852	33
4700388960	55
4700389003	43
4700389005	51
4700389019	51
4700389036	51
4700389142	45
4700389155	35,113
4700389218	35
4700389400	59
4700389405	61
4700389406	61
4700389407	59
4700389408	59
4700389432	39
4700389434	39
4700389556	55
4700389561	83
4700389577	83
4700389763	83
4700389798	97
4700389840	77
4700390316	61,63
4700391784	89
4700391920	117
4700391984	15,39
4700392011	35
4700392508	35
4700392509	35
4700393204	127
4700394253	49
4700394301	89
4700394541	43
4700395227	45
4700395257	91
4700395394	77
4700395497	61
4700395520	61,65
4700396971	77
4700397157	89
4700416034	91
4700476019	115,117,119
4700480852	35
4700483652	59
4700483653	67
4700483654	67
4700483655	59,67
4700483656	67
4700483657	67
4700483662	67
4700483663	59
4700483666	55
4700483669	61
4700483670	61,123
4700483684	43
4700483692	59
4700483693	123
4700483694	61
4700483695	59
4700483696	67
4700483714	59
4700484257	61
4700485034	129
4700485177	129
4700500006	117
4700500007	89,119
4700500012	39
4700500013	43,51,91
4700500018	89
4700500019	55
4700500021	45,47,75,83,91
4700500022	39,43
4700500024	31,75
4700500029	35,39,43,49,113
4700500030	89
4700500031	67,89,95
4700500037	59
4700500040	45
4700500041	75
4700500042	91
4700500047	43
4700500048	67
4700500050	19,29
4700500053	27,33,51,55,61
	67,75,89,91
4700500067	27,31
4700500068	33,49,55
4700500075	77
4700500079	127
4700500090	35
4700500105	31
4700500109	43
4700500161	43
4700500176	27
4700500180	83
4700500208	27
4700500230	79,81
4700500505	89
4700500506	43
4700500509	89
4700502016	43,45
4700508002	61
4700508004	35
4700508019	43
4700508022	33
4700508029	39
4700508048	43,95
4700508063	97
4700508092	51,61,75
4700508094	61
4700513013	115
4700513017	89
4700513027	99
4700527002	39
4700530027	27
4700535008	121
4700541702	83,85
4700570004	75,77
4700570005	31,43,75,115
4700570006	43
4700570007	39
4700573008	97
4700586001	91
4700586002	33,77
4700586003	31,33,75,77,83
	89,91
4700586018	31,43,79,81,89
	95
4700586022	27
4700624015	103
4700629101	83
4700635061	27,97
4700791185	77
4700791211	77
4700791226	89
4700791272	103
4700791395	61
4700791408	67
4700791410	67
4700791412	67
4700791422	49
4700791425	21,39
4700791426	21,23,39
4700791433	21,39
4700791453	127
4700791454	127
4700791476	89
4700791483	47,75
4700791493	43,45
4700791535	43,55
4700791537	55
4700791538	59,61
4700791540	67
4700791541	59,61
4700791542	67
4700791543	59
4700791559	27,33
4700791565	67
4700791568	35
4700791578	77
4700791579	77
4700791580	77
4700791581	77,123
4700791582	77
4700791583	79
4700791584	79
4700791585	83
4700791586	79
4700791587	79,81
4700791588	77
4700791597	33
4700791616	89
4700791639	75
4700791642	103
4700791643	33,79
4700791666	103
4700791668	95
4700791669	95
4700791699	59,61
4700791700	61,123
4700791701	67
4700791704	79
4700791723	77
4700791739	77
4700791743	59

NUMERICAL INDEX

Part Number	Page
4700791745	59
4700791754	33,81
4700791774	49
4700791775	31,77
4700791780	45
4700791794	61
4700791916	79
4700791926	95
4700791938	31
4700791939	31
4700791941	61
4700791949	35
4700791951	79
4700791953	79
4700791954	79
4700791955	79
4700791956	103
4700791957	81,103
4700791958	103
4700791959	35
4700791962	19,29
4700791970	79,81
4700791971	79
4700791973	27
4700791977	35
4700791980	83
4700791981	83
4700792019	75
4700792020	75
4700792026	43
4700792035	121
4700792059	79
4700792060	129
4700792061	129
4700792070	61
4700792072	31
4700792083	77
4700792098	85
4700792180	31,33,49
4700792188	31
4700792189	31
4700792236	89
4700792250	43
4700792320	77
4700792332	59
4700792611	19,29
4700792707	61
4700792773	61
4700792779	35
4700900986	97
4700901157	61
4700901212	129
4700901225	79
4700901227	79,111
4700901228	77,81
4700901297	35
4700901298	35
4700901369	81
4700901767	77
4700901832	45
4700902123	67
4700902166	33,89
4700902227	81
4700902286	27,45
4700902496	127
4700902560	111
4700902610	129
4700902890	33
4700903154	39
4700903236	49
4700903374	39
4700903422	103
4700903423	103
4700903424	103
4700903425	103
4700903459	103
4700903658	35,89,113
4700903714	45
4700903741	77
4700903768	75
4700903782	117
4700903810	79
4700903856	33
4700903948	95
4700903956	75,79
4700904009	55,59,67
4700904012	33
4700904015	111
4700904203	115
4700904214	27
4700904228	27,33,39,43,45
	51,61,75,77,91
	103,127
4700904229	27,31,33,43,47
	49,51,55,61,67
	75,83,89,91,95
	97
4700904230	43,67,79,81,89
	95
4700904231	27,39,43,75,97
4700904233	27
4700904281	35,75,89,99,113
	119
4700904556	27,33,35,43,61
	75,77,89,91
4700904557	39,43,49,89,113
4700904558	39
4700904567	35
4700904637	43
4700904640	31,35,39,43,45
	47,55
4700904641	55
4700904698	49
4700904703	39,47,59
4700904727	59
4700904735	61,117
4700904755	91
4700904835	111
4700904870	103
4700904889	79
4700904984	49
4700904989	79
4700908229	97,103
4700921039	83
4700921050	75
4700923734	35
4700923735	35
4700923859	127
4700923976	99
4700924544	35
4700925228	39
4700925519	39
4700925599	35
4700925802	61
4700926215	97
4700926537	91
4700927568	47
4700927974	117
4700928198	39
4700928381	33
4700928830	67
4700929191	27
4700929455	121
4700935429	69
4700935613	67
4700935614	67
4700939802	9,11,51
4700939803	9,11,51
4700939804	51
4700939805	51
4700939806	51
4700939807	51
4700939932	11,43
4700939977	43
4700940203	49
4700940208	5,7
4700940209	5,9
4700940210	5,11
4700940212	11
4700940227	43
4700940228	43
4700940229	43
4700940231	43
4700940374	95
4700940447	43
4700940451	77
4700940673	13,17
4700940885	61,125
4700940886	61,125
4700940887	61,125
4700940888	61,125
4700940894	49
4700940922	49
4700940960	91
4700940976	43
4700945123	43
4700945284	43
4700945286	43
4700945340	61
4700945418	49
4700945473	43
4700945526	67,71
4700945531	57
4700945532	57
4700945552	13,15
4700945622	89

NUMERICAL INDEX

Part Number	Page
4700945629	43
4700945658	57
4700945668	71
4700945710	13,21
4700945711	13,23
4700945729	95
4700945735	43
4700945753	49
4700945777	49
4700945878	47
4700945928	13,19,29
4700947684	67
4700947694	39
4700950382	91
4700960041	111
4700960079	79
4700985013	121
4700991658	103
4700999027	75
4811000351	103
4812110216	79,81
4812110283	127
4812110346	39
4812110560	111
4812110595	39
4812110596	39
4812110663	39
4812110724	75
4812110759	75
4812110761	89
4812110974	45,111
4812111325	35
4812111330	35
4812111331	35
4812112007	75
4812112074	35
4812112645	35
4812113676	87,93
4812113822	35
4812114386	77
4812114466	89
4812114657	75
4812116572	43
4812117025	111
4812117868	77
4812117990	91
4812118686	89
4812119960	59
4812120078	103
4812120092	103
4812120093	103
4812120119	103
4812120125	103
4812120412	103
4812120570	33
4812120592	33
4812120635	59
4812120636	59
4812120643	91
4812120650	91
4812120669	43
4812120670	43
4812155888	43
4812156170	15
4812156490	93
4812156558	93
4812156559	93
4812156560	93
4812156561	93
4812156562	93
4812156563	93
4812156564	93
4812156565	93
4812156566	93
4812156567	93
4812156568	93
4812156569	93
4812156570	93
4812156571	93
4812156572	93
4812156573	93
4812156574	93
4812156575	93
4812156576	93
4812156798	57
4812157555	63
4812157556	93
4812157560	65
4812158258	93
4812158259	93
4812158260	93
4812158267	93
4812159159	69
4812159160	69
4812159197	93
4812159198	93
4812159199	93
4812159251	93
4812159290	93
4812159291	93
4812159292	93
4812159667	43
4812159771	71