https://truckmanualshub.com/

302D-B/305D-B
Bottom Dump Semitrailer
Operators Manual

LANDOLL CORPORATION
1900 North Street
Marysville, Kansas 66508
(785) 562-5381
800-428-5655 ~ WWW.LANDOLL.COM

F-1044-0719 **06/2019 - Present**

https://truckmanualshub.com/

https://truckmanualshub.com/

Table of Contents

1 Introduction and Safety Information

Introduction 1-1

Understanding Safety Statements 1-2

2 Standard Specifications

Model 302D-B/305D-B 2-1

Specific Bolt Torque 2-2

General Torque Specifications (rev. 4/97) 2-3

Hydraulic Fitting Torque Specifications 2-4

3 Operating Instructions

General 3-1

- Parking Brake 3-1
- Air Brake System 3-1
- Disc Brakes 3-1
- Anti-Lock Brake System (ABS) 3-1
- Pre-Coupling of Semitrailer and Tractor 3-2
- Coupling the Tractor to the Semitrailer 3-3
- Electrical 3-3
- Tractor and Semitrailer Check-Out 3-4
- Towing the Semitrailer 3-4
- Parking the Trailer 3-5
- Uncoupling Towing Vehicle from Semitrailer 3-5
- Anti-Lock Brake System (ABS) 3-6
- Cold Weather Operation 3-7
- Hot Weather Operation 3-7
- Rocking Upper Coupler Compatibility 3-7
- Gate Control Valve Operation 3-7
- Gate Operation 3-8
- Clamshell Gate Air System Filter and Lubricator 3-9
- Oil Rate Delivery Adjustment 3-9

4 Maintenance and Lubrication

Maintenance Schedule 4-1

- Inspection 4-1
- Lubrication 4-1
- Maintenance Procedures 4-3
- Gooseneck, Frame, and Deck 4-7

Electrical System 4-7

Alignment 4-11

- Wheel Alignment 4-11
- Axle Alignment 4-13
- Manual Alignment Procedure 4-13

Brake System Maintenance 4-14

https://truckmanualshub.com/

General 4-14
Spring Air Brake Chambers 4-14
Caging the Power Spring 4-14
Removal 4-15
Installation 4-15
Emergency Relay Valve Maintenance 4-15
Brake Assembly Maintenance 4-15
Brake Adjustment 4-16
Disassembly for 16-1/2” x 7" Brakes 4-16
Reassembly for 16-1/2 x 7" Brakes 4-16

Automatic Slack Adjuster 4-18
Operational Check 4-18
Replacing Slack Adjuster 4-18
Adjusting Slack Adjuster 4-19

Hub and Drum Maintenance 4-20
Wheel Bearing Lubrication and Adjustment 4-22
Adjustment 4-22

Tire Maintenance 4-22
Tire Inflation 4-22
Tire Matching 4-23
Tape Measuring Method 4-23
Tire Changing Procedure 4-23
Straight Edge or String Method 4-23
Mounting Tire and Wheel 4-23

5 Troubleshooting Guide

Electrical 5-1

Tires - Wheels - Suspension 5-2

Brakes 5-4

Brake Drums 5-6

https://truckmanualshub.com/

Introduction and Safety Information

Introduction

This manual provides operating, servicing, and maintenance instructions for Model 440B/455B Semitrailer, manufactured by Landoll Corporation, Marysville, Kansas 66508.

CHAPTER 1 Gives basic instructions on the use of this manual and understanding the safety statements.

CHAPTER 2 Gives product specifications for the trailer, including measurements and component specifications. A Standard Bolt Torque Table is provided to give guidelines for bolt torques to be used when servicing this product.

CHAPTER 3 Gives instructions for the proper operation of the equipment.

CHAPTER 4 Gives general maintenance procedures, a maintenance schedule, and a lubrication schedule. Improper maintenance will void your warranty.

IF YOU HAVE ANY QUESTIONS CONTACT:

LANDOLL CORPORATION
1900 NORTH STREET
MARYSVILLE, KANSAS 66508

PHONE # (785) 562-5381 or (800) 428-5655
OR
FAX # (888) 527-3909

CHAPTER 5 Is a troubleshooting guide to aid in diagnosing and solving problems with the trailer.

PARTS MANUAL Is a separate manual showing the various assemblies, subassemblies, and systems. Refer to that manual when ordering Landoll replacement parts. Order parts from your Landoll dealer.

WARRANTY The Warranty Registration is done at the Landoll Website and should be done at time of sale by an Authorized Landoll dealership.
NOTE: IMPROPER ASSEMBLY, MODIFICATION, OR MAINTENANCE OF YOUR LANDOLL MACHINE CAN VOID YOUR WARRANTY.

COMMENTS Address comments or questions regarding this publication to:

LANDOLL CORPORATION
1900 NORTH STREET
MARYSVILLE, KANSAS 66508
ATTENTION: PUBLICATIONS - DEPT. 55

https://truckmanualshub.com/

Understanding Safety Statements

You will find various types of safety information on the following pages and on the machine signs (decals) attached to the vehicle. This section explains their meaning.

The Safety Alert Symbol means **ATTENTION! YOUR SAFETY IS INVOLVED!**

DANGER

Danger means a life-threatening situation exists. Death can occur if safety measures or instructions on this label are not properly followed.

WARNING

Warning means serious injury or death can occur if safety measures or instructions on this label are not properly followed.

CAUTION

Caution means serious equipment or other property damage can occur if instructions on this label are not properly followed.

NOTE

Means that failure to follow these instructions could cause damage to the equipment or cause it to operate improperly.

NOTE

Make sure you read and understand the information contained in this manual and on the machine signs (decals) before you attempt to operate or maintain this vehicle.

The safety statements contained in this manual relate to the operation of the Model 440B/455B semitrailer.

https://truckmanualshub.com/

Standard Specifications

Model 302D-B/305D-B	
DRY WEIGHT	
MODEL 302D-B	11,350 LBS
MODEL 305D-B	12,945 LBS
HEIGHT	
MODEL 302D-B/305D-B	8 FT. 9 IN.
HOPPER CAPACITY, OPENING & LOAD TARGET AREA	
MODEL 302D-B	21 CU YDS
MODEL 305D-B	21 CU YDS
MODEL 302D-B/305D-B	GATE OPENING 59 IN. X 117 IN.
MODEL 302D-B/305D-B	LOAD TARGET AREA 16 FT 0 IN.
GENERAL SPECIFICATIONS	
GOOSENECK	Fifth Wheel w/Lateral Rocking Plate
ELECTRICAL HOOKUP	7-Way Connector
AIR HOOKUP	Color Coded Glad Hands
CYLINDER	7x30 PNEUMATIC CYLINDER
PIN SETTING	
302D-B	18 IN
305D-B	18 IN
Overall Length (Does not include push bumper option)	
302D-35/39/43	35 FT. 3.5 IN /39 FT. 3.5 IN. /43 FT. 3.5 IN.
305D-39/43	39 FT. 3.5 IN. /43 FT. 3.5 IN.

Table 2-1: Trailer Standard Specifications

NOTICE

INDIVIDUAL TRAILER LOAD CAPACITIES ARE RATED FOR THE SPECIFIC TIRE AND WHEEL LISTED ON THE VEHICLE IDENTIFICATION PLATE LOCATED ON THE FRONT OF THE TRAILER. USING A TIRE OR WHEEL OTHER THAN THE ONE LISTED MAY RESULT IN A LOWER TRAILER LOAD CAPACITY.

https://truckmanualshub.com/

Specific Bolt Torque	
STANDARD SPRING RIDE SUSPENSION	
AXLE CLAMP U-BOLTS**	300 FT. LBS.
EQUALIZER BEAM PIVOT BOLT**	480-500 FT. LBS.
TORQUE ARM BOLT**	250 FT. LBS.
TORQUE ARM CLAMP NUTS**	60 FT. LBS.
AIR SPRING MOUNTING	
1/2”	35 FT. LBS
3/4”	35 FT. LBS
WHEEL FASTENERS - ALL MODELS	
OUTER SPINDLE NUTS	250 - 400 FT. LBS.
PILOT WHEEL NUTS	450 - 500 FT. LBS.

NOTE: Capacity ratings are frame capacities only. Actual load capacities may be restricted by factors such as gross axle weight ratings (GAWR) or state and federal regulations. Tires, brakes, axles, or wheels may also limit capacity.
****Axle clamp U-bolt, equalizer beam, arm bolt and arm clamp nuts must be checked every 3 months, at every routine Preventive Maintenance interval and at every brake relining and should be included as a visual pre-trip inspection point.****

Table 2-2: Specific Bolt Torque

https://truckmanualshub.com/

General Torque Specifications (rev. 4/97)

TORQUE SPECIFIED IN FOOT POUNDS - This chart provides tightening torques for general purpose applications when special torques are not specified on process or drawing. Assembly torques apply to plated nuts and capscrews assembled without supplemental lubrication (as received condition). They do not apply if special graphite moly-disulfide or other extreme pressure lubricants are used. When fasteners are dry (solvent cleaned) add 33% to as received condition torque. Bolt head identification marks indicate grade and may vary from manufacturer to manufacturer. Thick nuts must be used on grade 8 capscrews. Use value in [ ] if using prevailing torque nuts.

UNC SIZE	SAE Grade 2	SAE Grade 5	SAE Grade 8	UNF SIZE	SAE Grade 2	SAE Grade 5	SAE Grade 8
1/4-20	4 [5]	6 [7]	9 [11]	1/4-28	5 [6]	7 [9]	10 [12]
5/16-18	8 [10]	13 [13]	18 [22]	5/16-24	9 [11]	14 [17]	20 [25]
3/8-16	15 [19]	23 [29]	35 [42]	3/8-24	17 [21]	25 [31]	35 [44]
7/16-14	24 [30]	35 [43]	55 [62]	7/16-20	27 [34]	40 [50]	60 [75]
1/2-13	35 [43]	55 [62]	80 [100]	1/2-20	40 [50]	65 [81]	90 [112]
9/16-12	55 [62]	80 [100]	110 [137]	9/16-18	60 [75]	90 [112]	130 [162]
5/8-11	75 [94]	110 [137]	170 [212]	5/8-18	85 [106]	130 [162]	180 [225]
3/4/10	130 [162]	200 [250]	280 [350]	3/4-16	150 [188]	220 [275]	320 [400]
7/8-9	125 [156]	320 [400]	460 [575]	7/8-14	140 [175]	360 [450]	500 [625]
1-8	190 [237]	408 [506]	680 [850]	1-14	210 [263]	540 [675]	760 [950]
1-1/8-7	270 [337]	600 [750]	960 [1200]	1-1/8-12	300 [375]	660 [825]	1080 [1350]
1-1/4-7	380 [475]	840 [1050	1426 [1782]	1-1/4-12	420 [525]	920 [1150]	1500 [1875]
1-3/8-6	490 [612]	1010 [1375]	1780 [2225]	1-3/8-12	560 [700]	1260 [1575]	2010 [2512]
1-1/2-6	650 [812]	1460 [1825]	2360 [2950]	1-1/2-12	730 [912]	1640 [2050]	2660 [3325]
1-3/4-5	736 [920]	1651 [2063]	2678 [3347]	1-3/4-12	920 [1150]	2063 [2579]	3347 [4183]

METRIC:
Coarse thread metric class 10.9 fasteners and class 10.0 nuts and through hardened flat washers, phosphate coated, Rockwell “C” 38-45. Use value in [ ] if using prevailing torque nuts.

Nominal thread diameter (mm)	Newton Meters (Standard Torque)	Foot Pounds (Standard Torque)	Nominal Thread Diameter (mm)	Newton Meters (Standard Torque)	Foot Pounds (Standard Torque
6	10 [14]	7 [10]	20	385 [450]	290 [335]
7	16 [22]	12 [16]	24	670 [775]	500 [625]
8	23 [32]	17 [24]	27	980 [1105]	730 [825]
10	46 [60]	34 [47]	30	1330 [1470]	990 [1090]
12	80 [125]	60 [75]	33	1790 [1950]	1340 [1450]
14	125 [155]	90 [115]	36	2325 [2515]	1730 [1870]
16	200 [240]	150 [180]	39	3010 [3210]	2240 [2380]
18	275 [330]	205 [245]			

Table 2-3: General Torque Specifications

https://truckmanualshub.com/

Hydraulic Fitting Torque Specifications

TORQUE IS SPECIFIED IN FOOT POUNDS- 37° JIC, ORS, & ORB (REV. 10/97)

This chart provides tightening torques for general purpose applications when special torques are not specified on process or drawing. Assembly torques apply to plated nuts and capscrews assembled without supplemental lubrication (as received condition). They do not apply if special graphite moly-disulfide or other extreme pressure lubricants are used. When fasteners are dry (solvent cleaned) add 33% to as received condition torque. Bolt head identification marks indicate grade and may vary from manufacturer to manufacturer. Thick nuts must be used on grade 8 capscrews. Use value in [ ] if using prevailing torque nuts.

Parker Brand Fittings

Dash Size	37 Degree JIC	O-Ring (ORS)	O-Ring Boss (ORB)
-4	11-13	15-17	13-15
-5	14-16	----------	21-23
-6	20-22	34-36	25-29
-8	43-47	58-62	40-44
-10	55-65	100-110	58-62
-12	80-90	134-146	75-85
-16	115-125	202-218	109-121
-20	160-180	248-272	213-237
-24	185-215	303-327	238-262
-32	250-290	----------	310-340

Gates Brand Fittings

Dash Size	37 Degree JIC	O-Ring (ORS)	O-Ring Boss (ORB)
-4	10-11	10-12	14-16
-5	13-15	----------	----------
-6	17-19	18-20	24-26
-8	34-38	32-40	37-44
-10	50-56	46-56	50-60
-12	70-78	65-80	75-83
-14	----------	65-80	----------
-16	94-104	92-105	111-125
-20	124-138	125-140	133-152
-24	156-173	150-180	156-184
-32	219-243	----------	----------

Aeroquip Brand Fittings

Dash Size	37 Degree JIC	O-Ring (ORS)	O-Ring Boss (ORB)
-4	11-12	10-12	14-16
-5	15-16	----------	16-20
-6	18-20	18-20	24-26
-8	38-42	32-35	50-60
-10	57-62	46-50	75-80
-12	79-87	65-70	125-135
-14	----------	----------	160-180
-16	108-113	92-100	200-220
-20	127-133	125-140	210-280
-24	158-167	150-165	270-360
-32	245-258	----------	----------

Table 2-4: Hydraulic Fitting Torque Specifications

https://truckmanualshub.com/

Operating Instructions

General

This section supplies information for operation of the semitrailer. It describes and locates controls and gives general operation procedures. Read all instructions, warnings, cautions, and danger notes before attempting to operate the semitrailer. Operators must have proper training before operating the semitrailer.

Refer to F-1043-0619 302D-B/305D-B Bottom Dump Parts Manual for location of semitrailer parts.

WARNING

Do not operate the semitrailer with any known fault that might endanger the occupants, nearby workers, other traffic, the load, or the equipment.

WARNING

Do not operate the semitrailer until you have read the operator's manual and completely understand the proper use and function of all controls. Improper use can cause personal injury, damage to your semitrailer and cargo, and cause time-consuming breakdowns.

Parking Brake

The parking brakes are automatically applied by spring pressure with the air actuators of the braking system when air pressure in the emergency line drops below 50 psi. This may be done within the truck using the trailer parking/emergency valve or by disconnecting the emergency gladhands.

Air Brake System

The air brake system of the semitrailer is operated from the towing vehicle after coupling. The towing vehicle's air system must be coupled to the semitrailer and charged to 90 psi minimum before the brakes can adequately function.

Disc Brakes

Your trailer may be equipped with a disc brake option. This option does not change the importance of setting the proper brake and using proper braking technique when pulling your Landoll trailer.

Anti-Lock Brake System (ABS)

The Anti-Lock Brake System of the semitrailer is constant powered by the auxiliary (blue) circuit of the seven-way electrical connector, with backup power from the stop lamp (red) circuit, and ground through the white wire. It is necessary that the blue circuit is hot when the tractor key switch is on. The blue circuit on the trailer may not be used to power any additional auxiliary devices while the semitrailer is moving forward. If a fault exists in the ABS, normal braking will occur, but the wheels may lock. Service the ABS as soon as possible.

CAUTION

The auxiliary (blue) circuit is for powering the semitrailer ABS. This circuit must be hot when the tractor key switch is on. No other electrical devices may be powered by this circuit while the semitrailer is moving forward.

CAUTION

If a fault exists in the semitrailer ABS, normal braking will occur, but wheels may lock and the ABS must be serviced as soon as possible.

https://truckmanualshub.com/

Pre-Coupling of Semitrailer and Tractor

1. Slowly back the tractor/truck (towing vehicle) up to the front end of the semitrailer so the kingpin of the semitrailer is centered between the tractor fifth wheel jaws. Stop the towing vehicle just inches ahead of the semitrailer. Set tractor parking brake.
2. Check the semitrailer king pin plate. It should be in a horizontal position. The king pin plate should be the same height, to slightly lower, than the latch area of the fifth wheel plate of the towing vehicle. Drain all air and moisture from the towing vehicle air brake system following vehicle manufacturers instructions.
3. Connect the service and emergency air hoses of the towing vehicle to their respective gladhand on the front of the semitrailer; red emergency line to the gladhand with the “EMERGENCY” tag, and the blue service line to the gladhand with the “SERVICE” tag. Chock the semitrailer wheels before activating the semitrailer air supply valve in the towing vehicle. Set the parking brakes.

WARNING

Failure to chock semitrailer wheels could allow unintended movement of the semitrailer resulting in serious personal injury, death, or damage to property in its path.

4. Check the air brake operations of the semitrailer as follows:
   a. Apply brakes and inspect brake action on all wheels for prompt application.
   b. Release brakes. All brakes should release immediately. Air pressure should discharge quickly from the relay emergency valve.
   c. Disconnect the emergency air line from the semitrailer gladhand. Trailer brakes should promptly set.
   d. Re-connect the emergency air line to the semitrailer and activate the semitrailer air supply valve. The semitrailer brakes should set.

https://truckmanualshub.com/

Coupling the Tractor to the Semitrailer

DANGER

Keep all personnel clear of front, rear, and sides of towing vehicle and semitrailer during coupling, component operations, and uncoupling. Failure to stay clear can result in serious personal injury or death.

1. Verify the semitrailer wheels are chocked and brakes function properly.
2. Make certain the coupler of the towing vehicle's fifth wheel is open by pulling the latch handle.
3. Slowly back the towing vehicle so its fifth wheel contacts the front of the king pin plate on the semitrailer and slips under it. Continue backing until the fifth wheel coupler locks onto the semitrailer kingpin.

CAUTION

Pushing the semitrailer backwards can damage parking stands.

4. Verify the vehicle coupling is secure by attempting to pull the tractor forward a few inches. If the tractor disconnects from the semitrailer, locate source of coupling failure; repair before continuing; and repeat ***steps 3*** **and** ***4*****.**
5. Check that the towing vehicle couples securely to the semitrailer before setting towing vehicle and semitrailer parking brakes.

IMPORTANT

Keep brakes engaged for remainder of hookup, checkout procedures and parking.

Electrical

The only electrical operation required of the operator is connecting the towing vehicle electrical cable plug into the semitrailer electrical receptacle.

1. It is necessary that the tractor blue wire be connected to the appropriate electrical source on the tractor.
2. Connect the towing vehicle 7-pole electrical plug to the electrical receptacle on the front of the semitrailer.

IMPORTANT

The key on the plug and the keyway in the socket must be properly aligned before inserting the plug into the semitrailer socket.

https://truckmanualshub.com/

Tractor and Semitrailer Check-Out

WARNING

Failure to properly set and check parking brake, and chock wheels when parking and during storage, could allow movement of the truck/semitrailer rig resulting in serious personal injury, death, or damage to property in its path.

CAUTION

1. **Park stand legs must be fully retracted and secured with pins before operating or moving semitrailer.**
2. **Do not park bottom dump with material in hopper and park stand legs down. Failure to follow this will result in damage to park stand legs and repeated failure to follow this rule will shorten the service life of the park stand.**
3. **Do not attempt to open gate with legs down.**

1. Check the operation of all lights and signals on the semitrailer for proper response to switch positions (stop, right turn, left turn, and clearance). Check operation of remote function if present.
2. Check tire inflation; adjust as needed to the pressure listed on the semitrailer VIN plate, located on the front of the semitrailer.
3. Check tractor/semitrailer rig for air leaks. If air leak is found, repair the defect before transporting.
4. Check the oil in each hub for proper level and contamination. If hubs are contaminated with water, dirt or other foreign material, clean before transporting.
5. Check tractor air pressure. Pressure must not fall below 90 psi, even after activating brakes a couple of times. Set parking brake and carefully remove all wheel chocks. Set emergency brake and try pulling forward. The semitrailer wheels must not rotate.

IMPORTANT

Do not transport until defect or defects are repaired.

Towing the Semitrailer

Driving the towing vehicle with the semitrailer coupled behind requires constant attention to the overall length of the combination. The “hinged-in-the-middle” configuration of the tractor and semitrailer, load, and weight affect performance. Turning, passing, acceleration, braking, stopping, and backup require special considerations. When executing steep grades or turning tight curves, the semitrailer must not be allowed to push the towing vehicle, or jack knifing the semitrailer with the towing vehicle may result. Application of the semitrailer brakes will help prevent this pushing. Braking should begin before descending a hill or attempting a curve, to assure control.

1. Make a moving test of the semitrailer brakes at low and medium speeds before traveling at highway speed.

The Anti-Lock Brake System (ABS) warning lamp should come on when power is supplied to the ABS by turning the tractor keyswitch on. The warning lamp should go off once the semitrailer exceeds 4 mph. If the warning lamp does not go off, a fault exists in the semitrailer ABS.

2. Monitor the air pressure gauge on the dash of the towing vehicle. Pressure should not fall below 90 psi at any time.
3. The semitrailer wheels track to the inside of the towing vehicle during turns. Thus, turning corners requires a wide swing to prevent “curb hopping”, and to allow the semitrailer wheels to clear any obstacle on the inside of the corner.
4. To stop, use a gradual and smooth application of brakes. If grabbing occurs, apply less pressure - grabbing brakes are not efficient.
5. Backing should be done with care. Semitrailer length and allowable space must be taken into consideration when backing the semitrailer.

CAUTION

If a fault exists in the semitrailer ABS, normal braking will occur, but wheels may lock. Service the ABS as soon as possible.

DANGER

Always check behind and under the truck and semitrailer for persons or objects before moving. Failure to check can lead to serious personal injury or death to others, or damage to property.

https://truckmanualshub.com/

Parking the Trailer

1. Position truck/semitrailer rig on a level, solid surface.
2. Set the **PARKING BRAKE**, **not the semitrailer hand brake**, and check for proper brake holding.
3. Chock wheels of semitrailer.
4. Check for any air leaks in lines, relay valve, brake pods, or any other air system component.

Uncoupling Towing Vehicle from Semitrailer

1. Park the semitrailer according to instructions in ***"Parking the Trailer" on page 3-5***.
2. Lower the landing gear.

WARNING

With pin drop landing gear be sure to secure each leg with pin before leaving semitrailer unattended.

   a. Lower the optional pin drop landing gear to the ground. Pin through both inner and outer legs of landing gear.

3. Disconnect the emergency and service air lines and attach them to the tractor gladhand holders. If present, install dummy gladhands on trailer couplings.
4. Disconnect the 7-pole cable and store with the tractor.
5. Pull the tractor fifth wheel plate latch release knob.
6. Attempt to pull the tractor forward. If the tractor uncouples, verify all service lines are disconnected and semitrailer wheels are chocked. If tractor does not disconnect, repeat ***steps 5*** **and** ***6***.
7. Pull the tractor away from the semitrailer.

DANGER

Always check behind and under the truck and semitrailer for persons or objects before moving. Failure to check can lead to serious personal injury or death to others, or damage to property.

https://truckmanualshub.com/

Anti-Lock Brake System (ABS)

Vehicle standards FMVSS No. 121, anti-lock brake system requires all trailers manufactured after March 1, 1998 with air brake systems to have ABS. Each trailer (including a trailer converter dolly) shall be equipped with an anti-lock brake system that controls the wheels of at least one axle of the trailer. Wheels on other axles of the trailer may be indirectly controlled by the anti-lock brake system.

NHTSA Docket 92-29; notice 11 published September 23, 1996 specifies the ABS warning light be mounted near the rear of the left side of the trailer

- Decal or lens marking with ABS to identify the lamp.
- The lamp must illuminate one time whenever power is supplied to the ABS. At any time the light remains on when power is supplied there is a malfunction to the system.

The ABS used on the semitrailer is a commercial unit. Single axle trailers use a two sensor, one modulator system. Tandem and triple axle semitrailers use a four sensor, two modulator system. Sensors are located at each hub of the front and rear axles, and each modulator controls one side of the trailer.

The ABS is constant powered by the auxiliary (blue) circuit, center pin on the semitrailer seven-way electrical connector. This circuit must be hot whenever the tractor keyswitch is on. This circuit must also not be used to power any additional electrical devices while the semitrailer is moving forward. However, additional devices such as remote controls may be powered from the auxiliary circuit while the semitrailer is stationary. Backup power to the ABS is supplied through the stop lamp (red) circuit, No. 4 pin on the seven-way connector, and ground is supplied by the white wire, No. 1 pin.

⚠ CAUTION

The auxiliary (blue) circuit is for powering the semitrailer ABS. This circuit must be hot when the tractor key switch is on. No other electrical devices may be powered by this circuit while the semitrailer is moving forward.

Malfunction in the ABS is signaled by illumination of the ABS warning lamp located at the left rear side of the semitrailer. The warning lamp will come on and stay on while power is supplied to the ABS on a moving vehicle, if there is a fault. If a fault in the ABS exists, normal braking will still occur, but wheels may lock. The semitrailer is still operable, but the system should be serviced as soon as possible.

⚠ CAUTION

If a fault exists in the semitrailer ABS, normal braking will occur, but wheels may lock. Service the ABS as soon as possible.

Refer to ABS maintenance manual supplied with semitrailer to answer basic questions for the anti-lock brake system, obtain outline procedures on how to adjust, test, remove, and install ABS components, as well as how to test for faults in the system by using “Blink Code Diagnostics”; and illustrates ABS components, wiring, and plumbing installation diagrams.

https://truckmanualshub.com/

Cold Weather Operation

For maintenance during low temperatures check for frozen, sluggish or inoperable brakes, sagging light and brake lines, broken connections, increased corrosion and properly installed winter equipment.

1. Cold weather causes lubricants to congeal and insulation and rubber parts to harden, which may lead to problems found in bearings, electrical systems and air systems. Moisture attracted by warm parts can condense, collect and freeze to immobilize equipment. The truck/semitrailer operator must always be alert for indicators of cold weather malfunctions. Drain air tanks daily.

2. During any extended stop period, neither the service nor parking brake should be used as they can freeze up. Use wheel chocks to secure the vehicle from moving.

3. Check all structural fasteners, air system fittings, gaskets, seals and bearings for looseness that can develop due to contraction with cold. Do not over-tighten.

4. Check tire inflation. Tire inflation decreases when the temperature decreases.

5. Periodically check drain holes in the bottom of the relay valve (for trailers with air brakes) and storage compartments. They must be open at all times to avoid moisture entrapment.

6. Use additives to prevent moisture accumulation in the air lines and tanks during operation and storage. This can be applied directly into air lines or by using an additive appropriate for the climate applied through the towing vehicle.

Hot Weather Operation

1. Hot weather operation can create certain problems which must be checked. Expansion of parts result in tightening of bearings, fasteners, and moving parts. Failure of gaskets or seals can occur.
2. The semitrailer should be parked in the shade if possible. Long exposure to the sun will shorten service life of rubber components (i.e., tires, light and hose grommets, hoses, etc.) and paint life.
3. Check tire pressure early in the day before beginning operations while the tire is cool. Replace all valve stem caps after checking.
4. If the area is extremely humid, protect electrical terminals with ignition insulation spray. Coat paint and bare metal surfaces with an appropriate protective sealer.
5. The use of a filter-lubricator in the towing vehicle's air delivery system is recommended.

Rocking Upper Coupler Compatibility

The rocking coupler on the Landoll Bottom Dump is designed to reduce twisting stresses forced upon the trailer during operations on uneven terrain. It is coupled via a single axis hinged tractor fifth wheel.

If the towing vehicle uses a multi-axis oscillating fifth wheel, the rocking coupler on the trailer must be replaced with a rigid coupler. The rigid couple is available from the Landoll Parts Distribution Center, 1-800-423-4320.

Gate Control Valve Operation

The gate control valve can be operated from the cab of the towing vehicle or manually from the gate control valve assembly.

1. To operate the gate cylinder valve remotely, energize the solenoid from inside the cab of the towing vehicle. The energized solenoid provides pilot pressure to operate the spool and pressurized the small area bleeder pilot by the ball check. The air in the bleeder pilot acts as a return spring to return the spool to its original position. This air may eventually leak off, ***See Figure 3-1***.

2. Operate manually only through a deenergized solenoid. The bleeder pilot is used to vent any air which has not leaked off after a remote operation. After the solenoid is deenergized and the bleeder pilot is vented, the manual operator can then be moved in either direction to control the cylinder.

3. Periodically disassemble and clean the valve.

https://truckmanualshub.com/

Gate Operation

You trailer is equipped with one of two types of dump valves. A Versa valve or Wabco Valve. The Versa (gold valve body) valve allows the operator to feather the gate opening to slowly release a loaded hopper. The Wabco (blue valve body) valve is an immediate release valve and the flow is controlled using the chain adjustments, ***See Figure 3-2***. Both valves have an option to allow for control from the pulling vehicle cab.

1. Control the amount of gate opening by setting the gate limiting chains. Set the gate limiting chains at the same length, front and rear, on the gates. The gates must open only enough to unload the cargo. They must not be opened so wide that the windrow becomes too high. If the windrow is too high it will cause the axles and brakes to drag on the windrow.
2. Do not unload at excessive speeds.

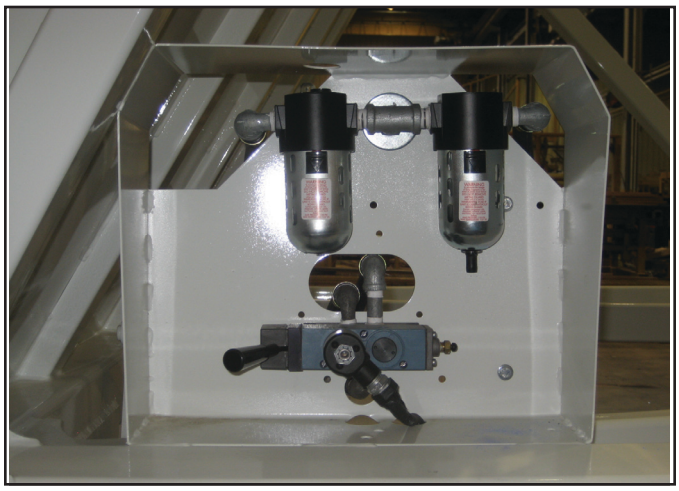

Figure 3-1: Wabco Valve. Manual release located on the left with cab release option equipped.

Figure 3-2: Adjust gate chains to control the flow of material from the hopper.

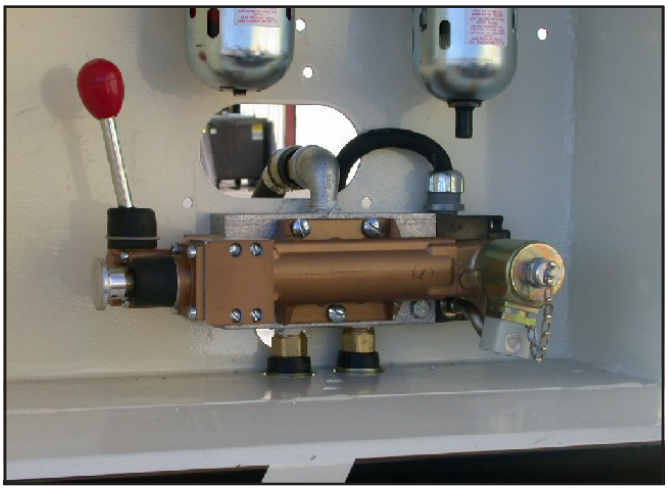

Figure 3-3: Versa valve (gold valve body) does not require the chain adjustments for the gate. The valve controls the rod on the pneumatic cylinders and allows the operator to feather the gate opening. The red handle is the manual release and the electrical connector is the cab release option equipped.

1. Ensure trailer is centered on intended drop site for material in the hopper.
2. Ensure gate chains are set at correct position and at equal lengths front and rear.
3. Slowly pull forward and begin opening gate by using gate controls in the cab (Option) or at the valve assembly located on the street side rear end of the hopper. Continue pulling forward until load is empty.
4. Pull forward and park in a safe spot and make sure hopper is empty to ensure material isn't lost during highway driving operations.
5. Close the gate and ensure air operations keep gate closed by visually monitoring for approximately 60 seconds.

https://truckmanualshub.com/

Clamshell Gate Air System Filter and Lubricator

1. During normal service conditions the lubricator bowl should be kept filled above the level of the bottom of the siphon tube with a petroleum based oil. SAE-5 or SAE-10 motor or hydraulic oil.
2. In colder weather or under more severe operating conditions an automobile automatic transmission fluid (ATF-F or Dextron) often provides better performance than a conditional motor or hydraulic oil.
3. In damp, below freezing conditions, freezing water in the air lines can cause gate operation issues. In such conditions lubricating oil should be replaced with an appropriate anti-icing tool oil or deicer fluid.
4. The unit may be filled or cleaned under pressure by removing the fill plug and then removing the bowl.

⚠ CAUTION

Do not remove the fill plug until the bowl and guard are in position and the clamp ring is locked into place.

Certain compressor oils, chemicals, household cleaners, solvents, paints and fumes will attach the plastic bowls and can cause failure. Do not use these products. Immediately replace any cracked, glazed, damaged or deteriorated plastic bowl with a new bowl and metal bowl guard.

Use only recommended air system lubricants. Non-specified types may be hazardous to unit. Bowl guard must be on at all times during operation to confine fragments in case of bowl failure.

Oil Rate Delivery Adjustment

1. The rate of oil delivery from the lubricator should be set at three drops for each complete cycle of one hopper gate system.
2. The rate of oil delivery is controlled by turning the adjusting screw counterclockwise for increased flow and clockwise for decreased flow.
3. Remove the tamper resistant cap to gain access to the drip rate adjustment screw.

https://truckmanualshub.com/

https://truckmanualshub.com/

Maintenance and Lubrication

This section contains instructions necessary for proper maintenance of your semitrailer. Landoll Bottom Dump semitrailer is designed for years of service with minimal maintenance. However, proper maintenance is important for durability and safe operation and is an owner/user responsibility.

Maintenance Schedule

Trailer maintenance includes periodic inspection and lubrication. ***See Figure 4-2***, lists the recommended maintenance and lubrication tasks by time interval and by accumulated mileage (use whichever occurs first).

DANGER

Operating the tractor or trailer with defective, broken or missing parts may result in serious injury or death, damage to the tractor/trailer, its cargo, or property in its path.

The following maintenance practices are recommended for your Landoll Bottom Dump Trailer:

1. Check the suspension and tighten the bolts to the specified torque within the first 50 miles of operation. See Chapter 2, **(SEE PAGE 2-3)**.
2. Tighten wheel nuts properly after two (2) trips after delivery. A wheel tightening sequence is provide, ***See Figure 4-18***.
3. Cam and brake adjustment is governed by the type and severity of trailer use. Regular maintenance of grease fittings on cam shafts is recommended. Your trailer may be equipped with a centralized grease system to help with the lubrication process. However, it is the owner/operator responsibility to ensure grease system functions and lubricates properly.
4. Lubrication is recommended at a minimum of every 60 days. As severity of use increases the time between lubrication intervals decreases.
5. Bleed the air when lubricating. This allows for better penetration of grease into the cam shafts.

Inspection

1. Inspect the tractor, the trailer, and trailer parts periodically for damage or signs of pending failure. Damaged or broken parts must be repaired or replaced immediately and before operating the semitrailer.
2. Use the **Troubleshooting Guide** in Chapter 5 to check for “SYMPTOMS” and “PROBLEMS” of any trailer system not functioning correctly, or where wear, distortion, or breakage is found. Administer “REMEDY” according to the right-hand column of the troubleshooting section.

Lubrication

See Figure 4-1 **and** ***See Figure 4-1*** detail lubrication points and intervals, method of application, and lubricant required, and illustrate the location of each part to be lubricated. During inspections of the trailer, if lubricants are found to be fouled with dirt or sand, those parts should be cleaned with paint thinner, dried, and relubricated immediately. Dirt in a lubricant forms an abrasive compound that will wear parts rapidly.

1. There are two areas of the Bottom Dump Semitrailer that need lubrication - the axles and axle components and the rocking fifth wheel plate. ***See Figure 4-1*** for lubrication points.
2. Use a grease and hub oil suited for your operating environment. Landoll provides ***See Table 4-1*** as a general guideline of suggested manufacturers and grades of oil and lubricant for a Landoll trailer.

WARNING

Paint thinner and other solvents are flammable and toxic to eyes, the skin, and respiratory tract. Avoid skin and eye contact. Follow all manufacturers recommended instructions and safety precautions.

https://truckmanualshub.com/

TANDEM AXLE GREASE SYSTEM

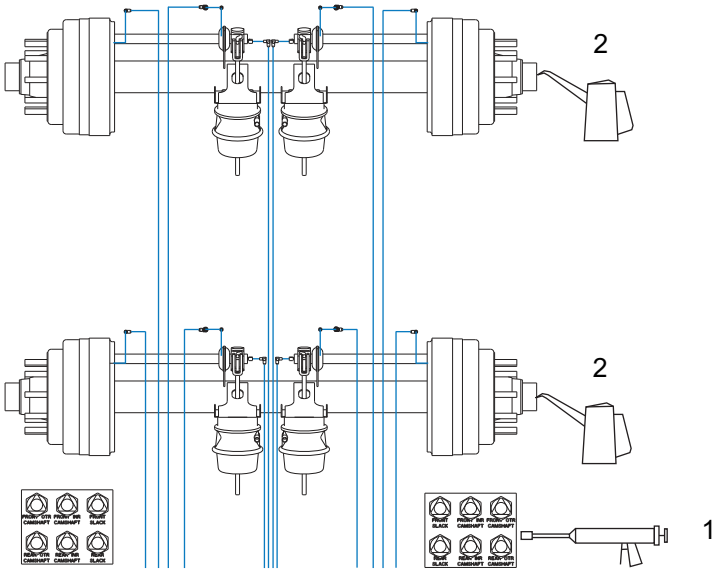

ROCKING PLATE GREASE POINTS
(RED HIGHLIGHT)

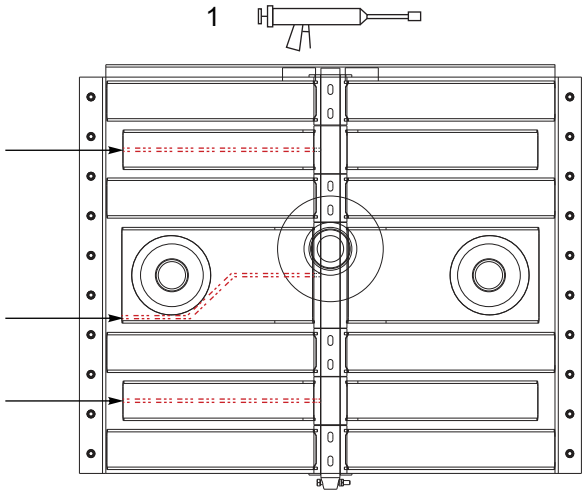

AIR LUBRICATION SYSTEM

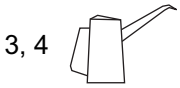

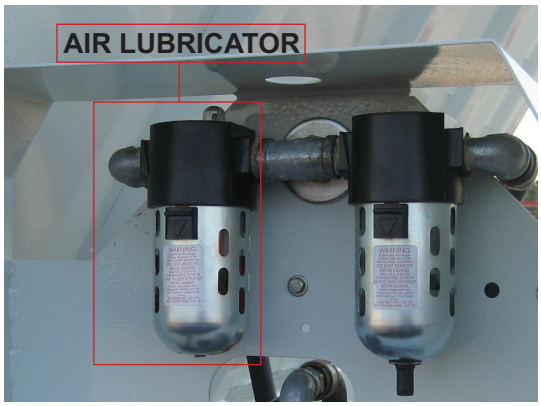

TRIPLE AXLE GREASE SYSTEM

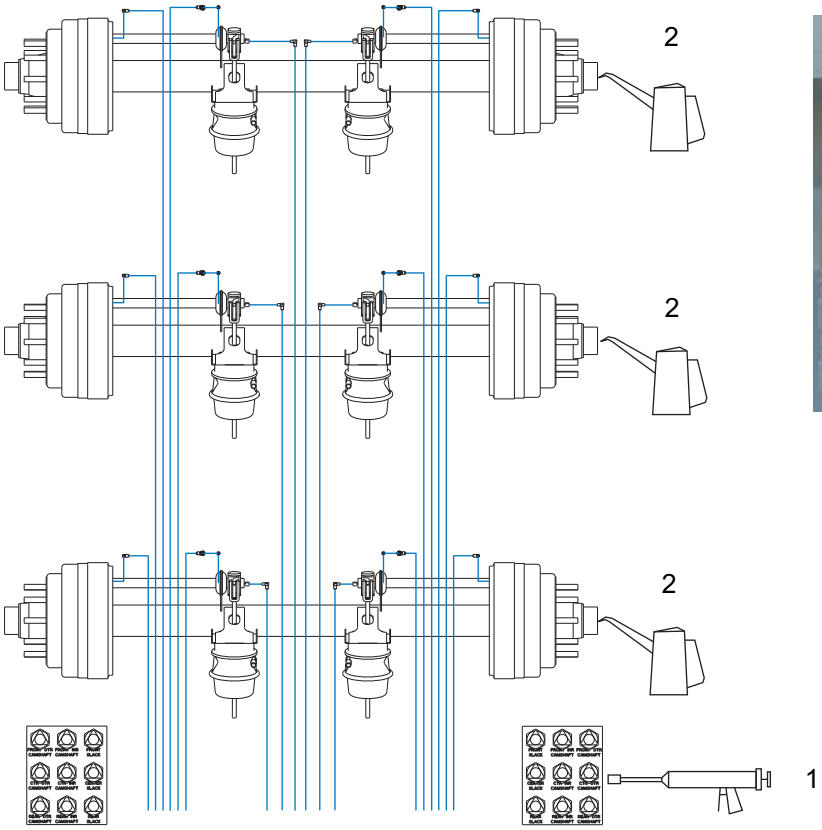

Figure 4-1: Lubrication Points

https://truckmanualshub.com/

LUBE	SEASON	BRAND & PRODUCT (WEIGHT AND/OR TYPE)			
		AMOCO	EXXON	MOBIL DELVAC ATF	MOBIL DELVAC
1	ALL YEAR	Lit-Multi-purpose Grease	Rondex Multi-purpose Grease	-----	-----
2	ALL YEAR	Gear Lube SAE 80W-90	Gear Oil GX SAE 80W-90	-----	-----
3	ALL YEAR	-----	-----	-----	MOBIL DELVAC SAE-5/SAE-10
4	COLD WEATHER	-----	-----	MOBIL DELVAC SYN ATF	-----

Table 4-1: Lubrication Specifications

Maintenance Procedures

Repair Parts

Repair parts are illustrated and listed in F-1043-0619, 302D-B/305D-B Bottom Dump Parts Manual. Replacement of parts due to wear is determined by examination and best judgment practices. Brake wear is provided as a general rule for replacement and may occur before or be prolonged due to semitrailer use.

Please contact Landoll Corporation Parts Distribution Center for any parts questions, (800) 423-4320

Tools and Equipment

Tools, equipment, and personnel normally found in a facility capable of making truck repairs will be adequate for maintenance of the semitrailer. No other special tools or equipment should be necessary.

Torque Values

See Figure 2-3 for a list of torque values for standard hardware and hydraulic fittings. They are intended as a guide for average applications involving typical stresses and mechanical surfaces. Values are based on the physical limitations of clean, plated, and lubricated hardware. In all cases, when an individual torque value is specified, it takes priority over values given in this table. Replace original fasteners with hardware of equal grade.

https://truckmanualshub.com/

Cleaning

1. Wash semitrailer to remove all accumulated dirt and grime.
2. Use any mineral spirits paint thinner (or its equivalent) to remove grease and oil from all parts of the trailer. Rinse degreasing solution off with cold water.
3. Inspect semitrailer for cause of any reported troubles.
4. Scrape, sand, prime, and repaint areas where finish is missing or where there is evidence of corrosion.
5. Replace any missing or illegible decals. Replace any missing or damaged reflective tape.

WARNING

Paint thinner and other solvents are flammable and toxic to eyes, the skin, and respiratory tract. Avoid skin and eye contact. Follow all manufacturers recommended instructions and safety precautions.

https://truckmanualshub.com/

NORMAL OPERATING SERVICE INTERVALS							
ITEM	1ST 5 HOURS OR 50 MILES	WEEKLY OR 500 MILES	MONTHLY OR 2,000 MILES	6 MONTHS OR 12,000 MILES	YEARLY OR 25,000 MILES	LUBE #	NOTES
LIGHTS	I	I					
WIRING & CONNECTIONS	I		I				
FASTENERS	I,T		I				b
KING PIN AND PLATE	I		C,I,L			1	c
BRAKE AIR SYSTEM	I	I	I				
RELAY VALVES					I,C		
BRAKE ADJ & WEAR	I		I,T				a,d
SLACK ADJUSTERS	I	I		L		1	c
CAMSHAFT ASSEMBLIES	I	I			L	1	c
HUB OIL	I	I,L			R	2	a,c
WHEEL BEARINGS	I		I,T				b
TIRE INFLATION & WEAR	I	I					a
WHEEL LUG NUTS	I,T	I	I,T				b
SUSPENSION ALIGNMENT	I		I				
HOSES ***(Inspect & Replace as needed)***	I		I		I,R		
CLAMSHELL LUBRICATOR	I	I			R	I	c
CLAMSHELL AIR FILTER	I			R			
GATE COMPONENTS	I		I		I		

I - Inspect, R - Replace, T - Tighten/Adjust Torque, L - Lubricate, C - Clean

a. Perform at the time shown. Shorten service intervals when operating in severe or dirty conditions.

b. ***See Table 2-3*** for correct torque specifications.

c. ***See Table 4-1*** for recommended lubricant.

d. **See** ***"Brake Assembly Maintenance" on page 4-15*** for procedures.

e. See Serial Number Plate on the front of the semitrailer for proper inflation requirements.

f. See ***"Wheel Bearing Lubrication and Adjustment" on page 4-22*** for procedure.

Table 4-2: Maintenance Schedule

https://truckmanualshub.com/

6. Use Troubleshooting Guide to check for “SYMPTOMS” AND “PROBLEMS” of any semitrailer system not functioning correctly, or where wear, distortion, or breakage can be found. Administer “REMEDY” according to right-hand column of Troubleshooting guide.
7. After disassembling any components, thoroughly clean dirt and old lubricant from all parts. Do not use a wire brush on any bearing parts or surfaces — use a stiff bristle brush. Do not use compressed air, or spin bearing parts when cleaning. These practices can throw solvents, dirt, or metal particles into your eyes. Dry clean parts with lint free, clean, soft, absorbent, cloth or paper. Wash and dry hands.
8. Inspect seals, seal wiping surfaces, bearing caps, and bearing cones for wear, pitting, chipping, or other damage.

https://truckmanualshub.com/

Gooseneck, Frame, and Deck

Repairing Structural Defects

If any structural defect is found, the fault must be corrected before further use of the vehicle. To continue usage could endanger the trailer, its load, personnel, traffic, and properties. If any cracks or breaks are found, contact the Landoll factory immediately and be prepared to provide photos and descriptions of damaged areas. Contacting Landoll is required for reporting purposes. Inspect the deck daily for broken or missing planks or missing attachments. Replace any defective parts promptly.

Electrical System

1. Maintenance of the electrical system consists of inspection and minor servicing. Any wire, connection or electrical component showing signs of corrosion, wear, breakage or unraveling must be repaired or replaced.
2. Frayed or unraveling wire must have the defective section removed and replaced with wire of the same color and gauge. Seal all connections and insulate. Before cutting or altering any blue Grote wiring harness, contact your Landoll dealer and inquire about the wiring harness warranty.
3. Corroded terminals must have the corrosion removed, source of corrosion neutralized and the terminals resealed, protected, and insulated.
4. Fuse or circuit breaker burn-out or blow-out usually indicates an electrical short-circuit, although a fuse can occasionally fail from vibration. Insert a second fuse or reset the breaker. If this fuse immediately burns out or the breaker trips, locate the cause of the electrical short and repair.
5. A light that repeatedly burns-out usually indicates a loose connection, poor system ground, or a malfunctioning voltage regulator. Locate the source of the problem and repair. System grounds must be grounded to bare metal surfaces. Paint, grease, wax, and other coatings act as insulators. Replacement lamps must be equivalent to the factory installed lamp.

https://truckmanualshub.com/

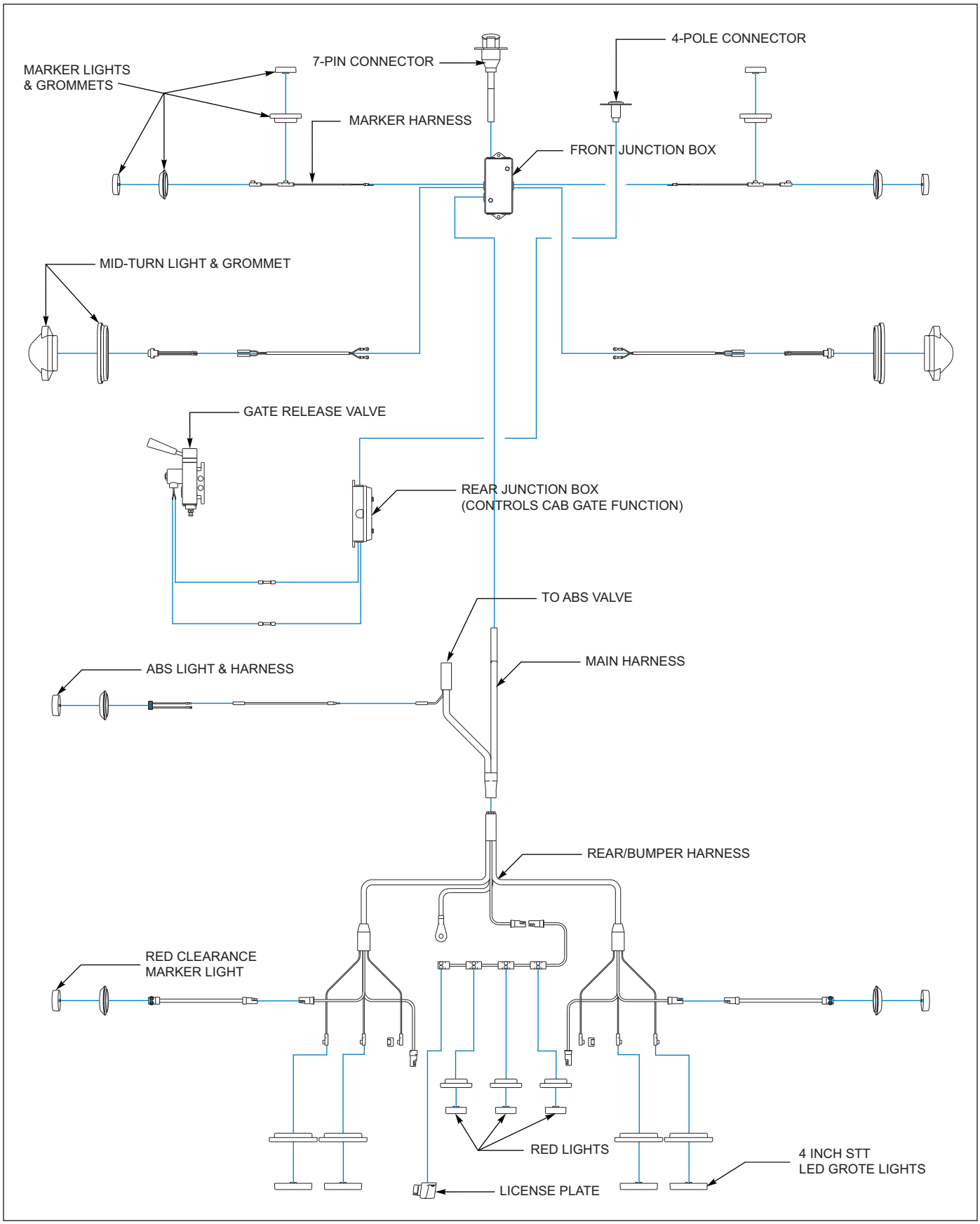

Figure 4-2: Main Wiring

https://truckmanualshub.com/

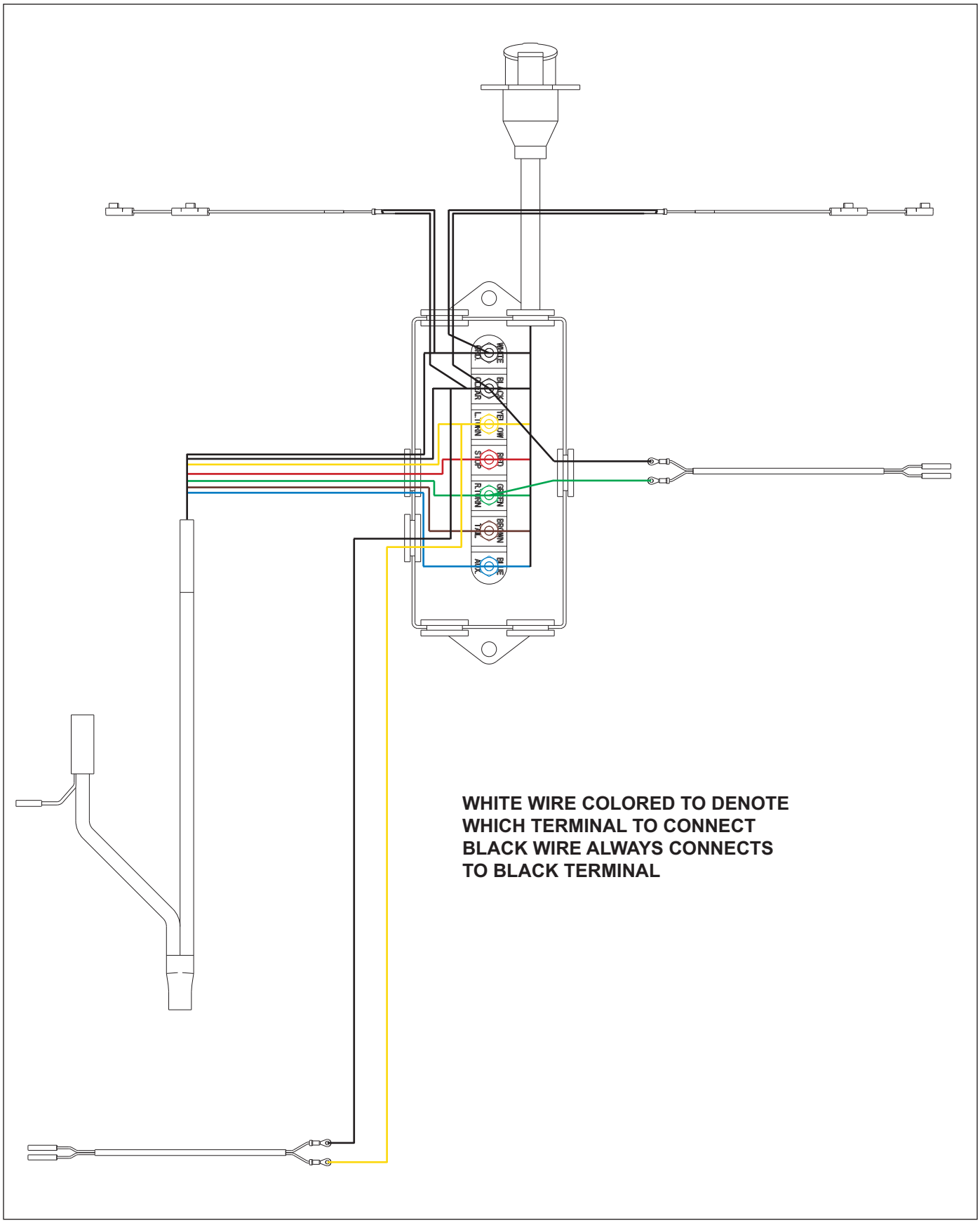

Figure 4-3: Trailer Front Main Junction Box

https://truckmanualshub.com/

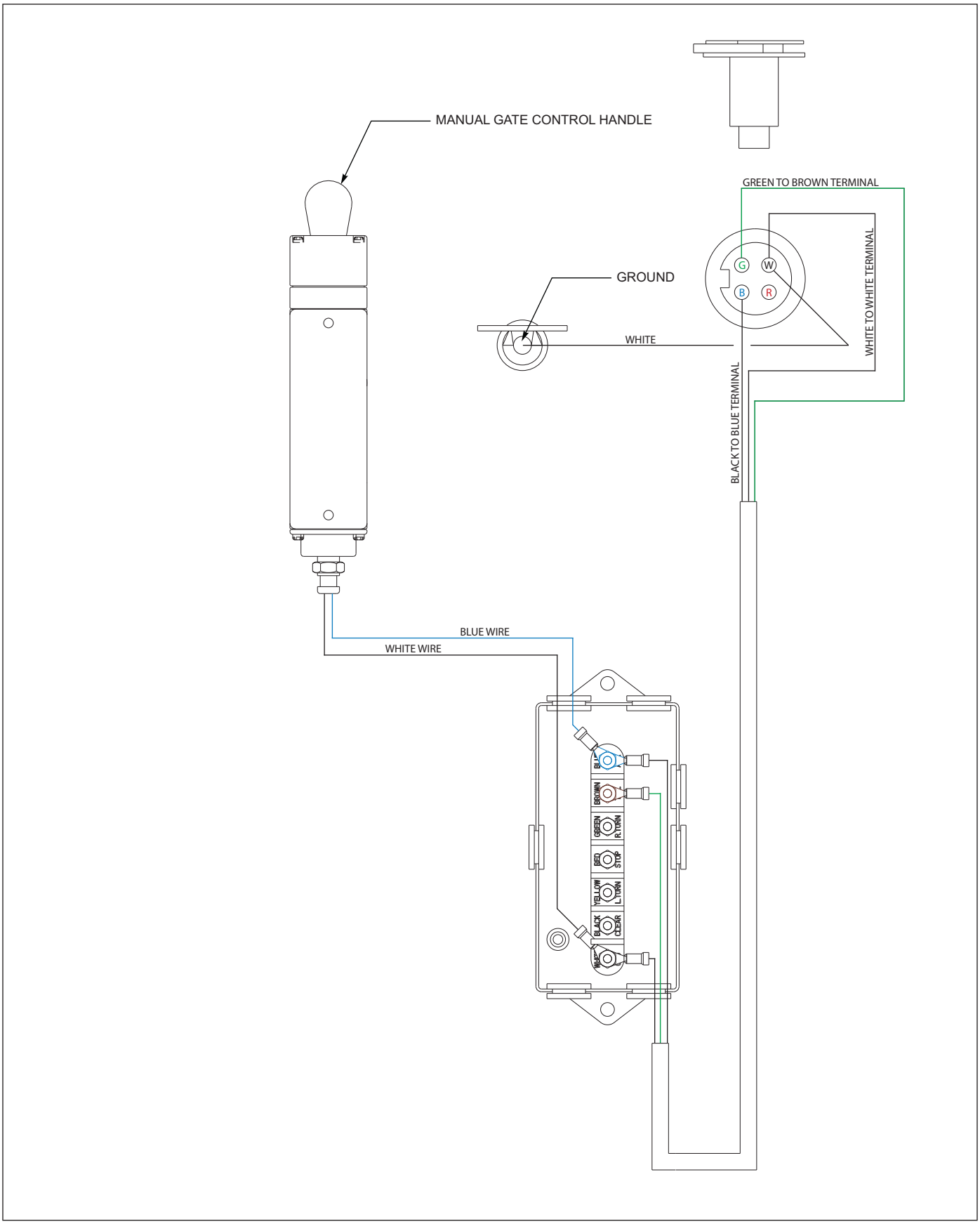

Figure 4-4: Rear Junction Box - Cab Gate Function

https://truckmanualshub.com/

Alignment

Wheel Alignment

DANGER

To prevent a life threatening accident:

1. **Support trailer so tires are off the ground.**
2. **Support the trailer on jack stands with sufficient capacity to support the total weight of the trailer and any load which it may be carrying.**

When trailer tires show signs of scuffing, feather-edging or uneven wear, examine the trailer for damaged suspension (frame, shocks, linkage, etc.), axle, wheel bearings and wheels. Proper wheel alignment and wheel bearing adjustment is essential for proper tire wear. The simplest form of checking wheel alignment “toe” is by running the trailer over a “SCUFF GAUGE”. A scuff gauge reading of 16 feet or less per mile is considered satisfactory. If a scuff gauge is not readily available, or edge wear on one side of a tire is occurring signifying positive or negative camber, alignment can be checked as follows:

1. Remove wheel, hub and bearing assemblies.
2. Place a 3-point axle gauge against the front side of the axle, and adjust each axle gauge point to the axle. (Double point end against the inner and outer wheel bearing surfaces of the spindle being checked and the other point on the inner bearing surface on the other spindle **(*See Figure 4-5*.)**
3. Move the axle gauge and place against the back side of the axle. If either of the points of double point end fails to touch the axle surface, a bent spindle is evident. A point gap of .015" or more is considered excessive tire “toe” and the axle must be replaced **(*See Figure 4-5*.)**
4. Follow the same procedures as in Steps 2 and 3**,** except place the axle gauge above and below the axle. If gauge point gap is found, the axle has positive or negative camber. The trailer axle has no camber from the factory. If it is found to have positive or negative camber, axle replacement is necessary for examples of camber **(*See Figure 4-6*)**

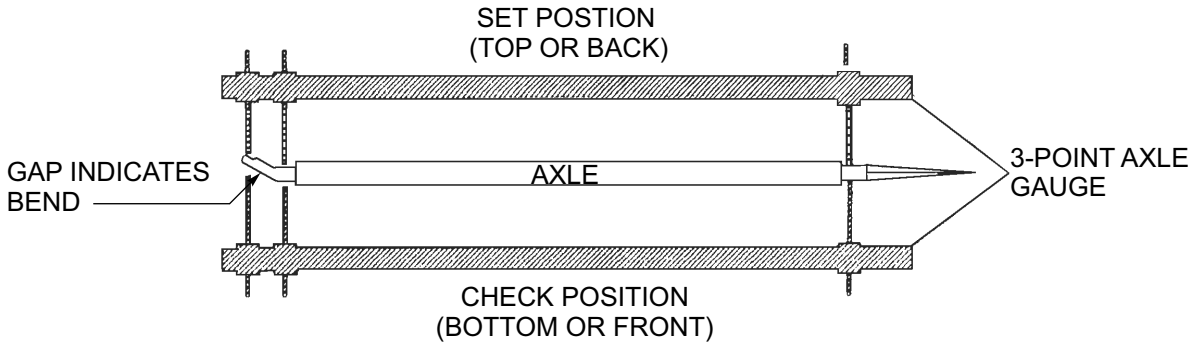

Figure 4-5: Checking Axle for Bend

https://truckmanualshub.com/

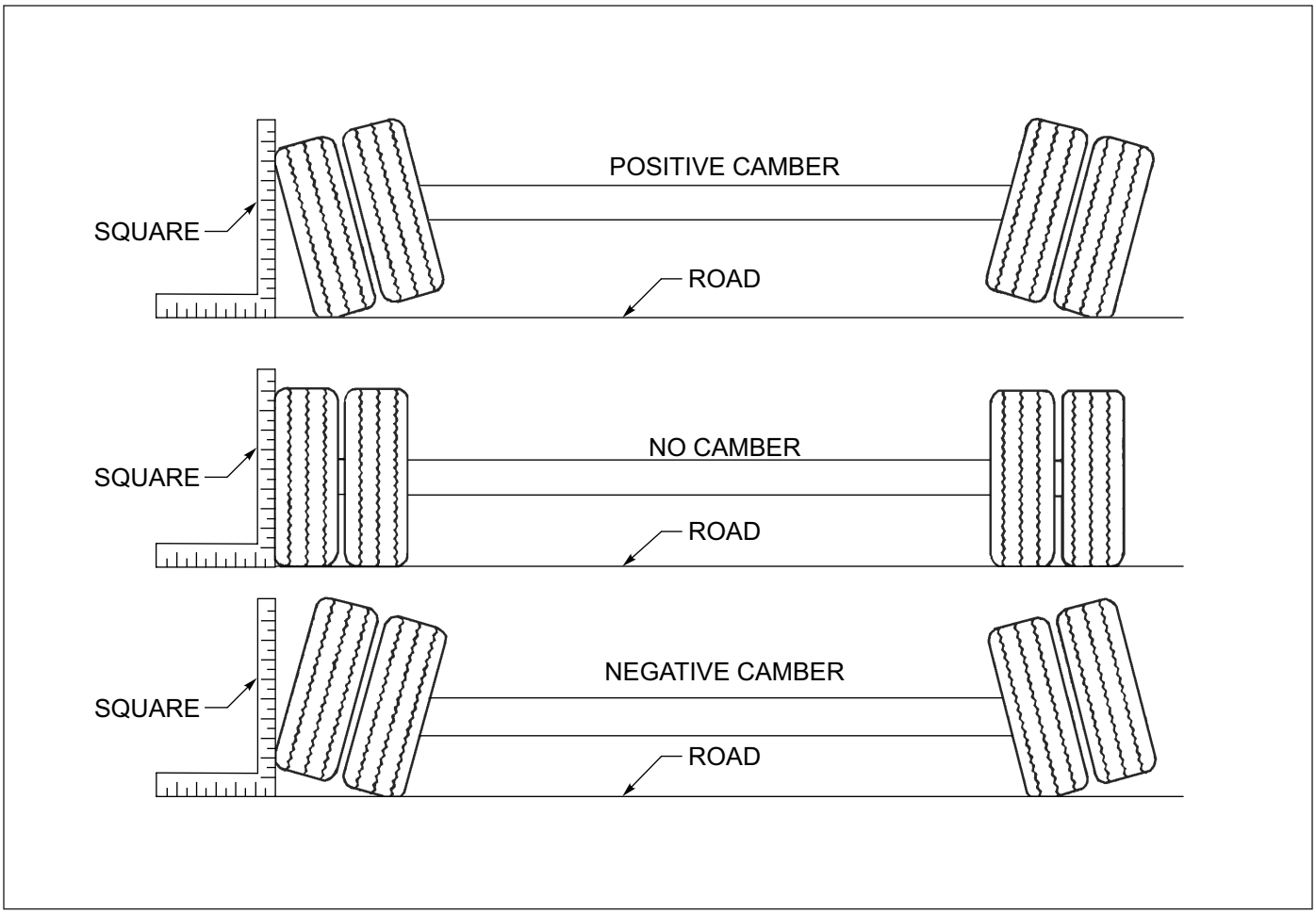

Figure 4-6: Examples of Camber

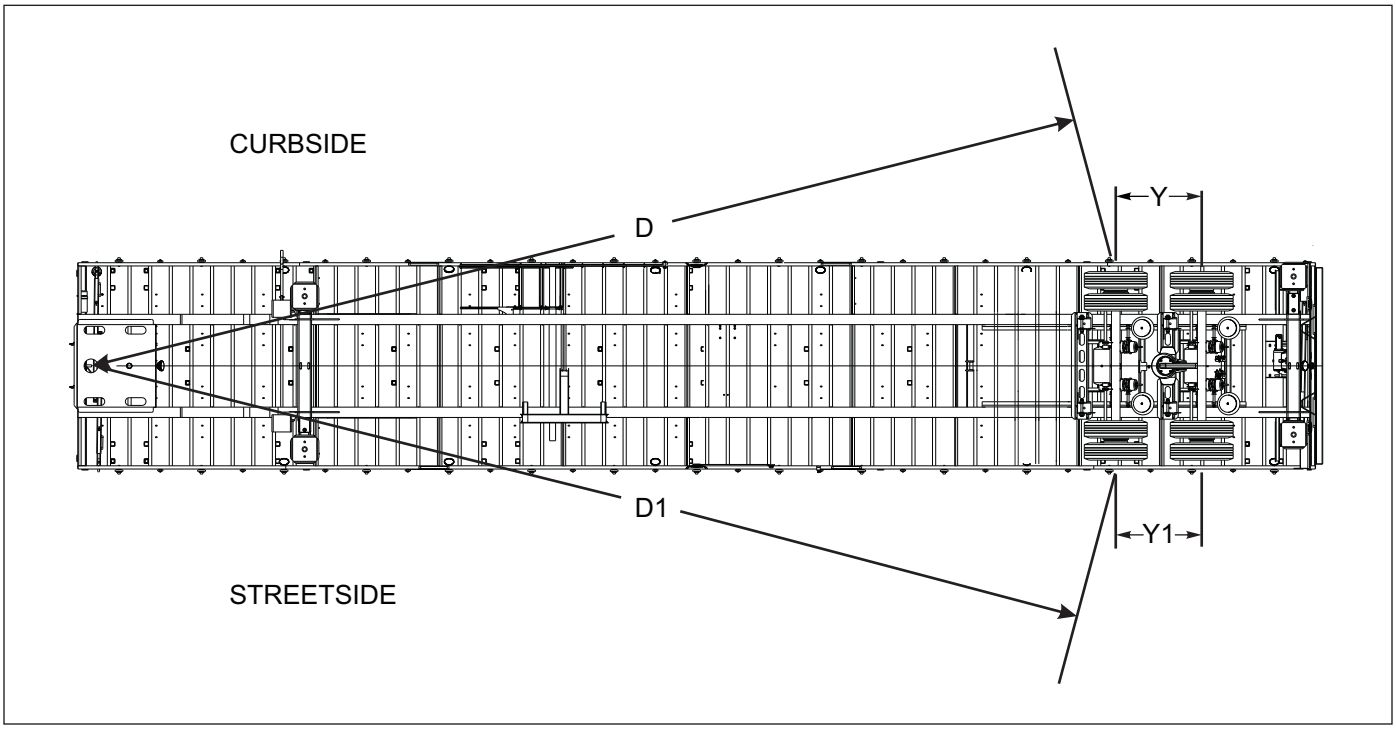

Figure 4-7: Checking Axle Alignment

https://truckmanualshub.com/

Axle Alignment

Proper axle to king pin alignment is necessary to obtain straight tracking. If axle alignment is off, “dog-tracking” occurs. Check alignment manually or by using a semitrailer alignment machine. In either case, a thorough inspection of the complete suspension must be performed and all defects corrected before aligning.

Manual Alignment Procedure

1. Position semitrailer on a firm and level surface. Ensure that the undercarriage is in the rear most position. Eliminate any suspension binding due to sharp turns or unusual maneuvers.
2. Detach tractor from the semitrailer and jack the trailer up sufficiently to permit measuring from the underside of the trailer.
3. Suspend a plumb bob at axle height from the center of the king pin.
4. Measure (D) from the plumb bob to the center point on one end of the axle. Record this measurement (***See Figure 4-7***).
5. Measure (D1) to the other end of the axle in the same manner as in ***Step 4***. Record this measurement (***See Figure 4-7***).
6. Set D about 1/8” shorter than D1 to ensure proper trailer tracking on slope of road.
7. The suspensions must be in good repair with no binding or other restrictions before aligning. All defective parts of the suspension or axles must be replaced immediately.
8. To align axles manually, use a 15/16” wrench and pipe wrench. Loosen the nuts and bolts, ***See Figure 4-8***, and adjust the tie rod until the 1/8” offset is achieved for road slope. Tighten nuts and bolts to torque recommendations and remeasure to ensure adjustment stayed correct. Adjust as needed to maintain offset.

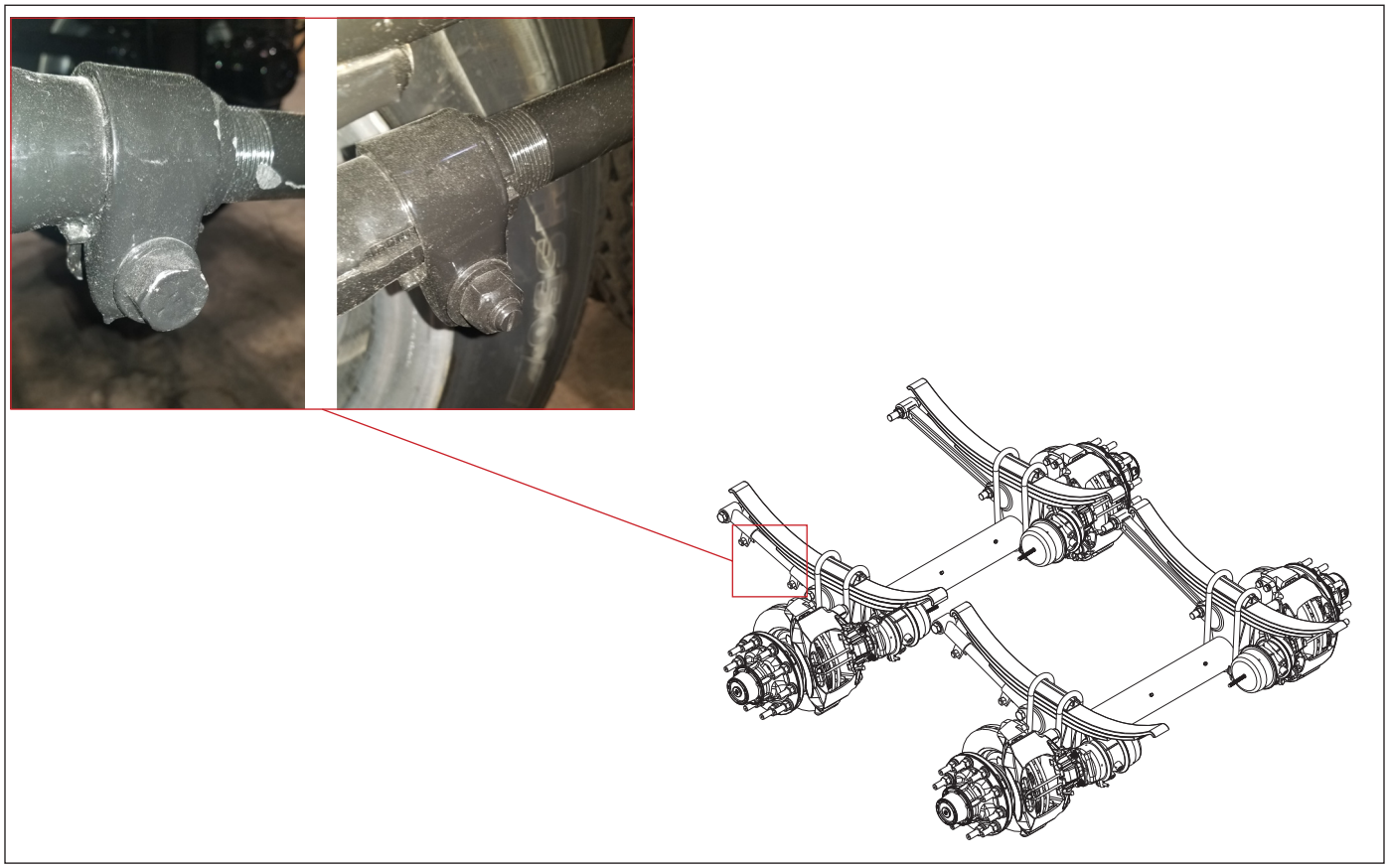

Figure 4-8: Manual alignment is performed by loosening the bolts and adjusting the rod with a pipe wrench.

https://truckmanualshub.com/

Brake System Maintenance

WARNING

1. **When crawling under the semitrailer is necessary, chock all wheels of the trailer and tractor. When jacking is necessary, chock all wheels and support the semitrailer with jack stands sufficient to maintain the weight of the semitrailer. Failure to take adequate safety measures may result in serious personal injury or death.**
2. **Do not handle hubs and drums until they are cool enough to safely remove.**

General

A daily general inspection will reveal the most common problems found in the spring brake system. This inspection should include the following:

1. Check air hoses for chafing, bends, kinks, or damaged fittings. Replace defective hoses.
2. Check the brake system for loose, missing, deformed, or corroded fasteners. Replace and tighten defective hardware.
3. Check brake linings for excessive wear or distortion.
4. Drain air reservoir daily. A drain cock on the bottom of each air reservoir vents the tank to drain collected water and oil. If held open, air pressure in the tanks is relieved, causing the emergency or parking brakes to be applied (***See Figure 4-9***) The drain cocks on your Landoll Bottom Dump have a pull loop routed from drain cock to allow easy access.

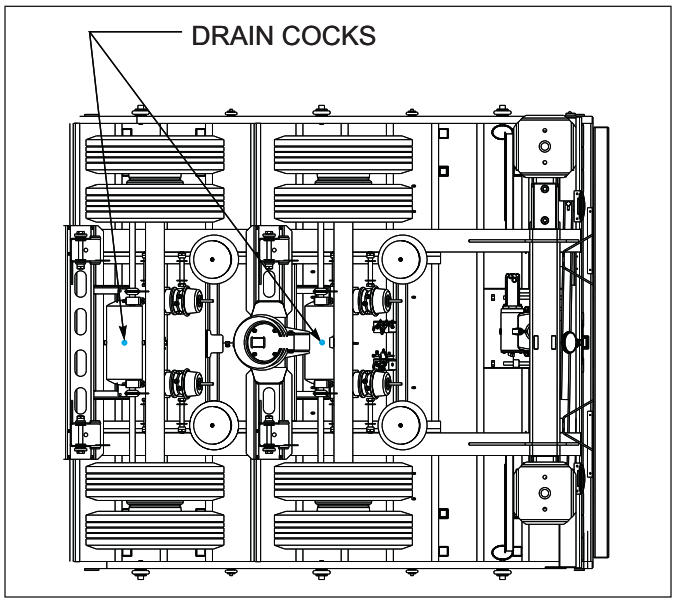

Figure 4-9: Drain Cock Locations

Spring Air Brake Chambers

Check for faulty units. Check the condensation holes on the underside of the brake chambers to make sure they are open. The spring brake has two brake chambers, a service chamber and an emergency chamber or spring chamber. Service brake chambers should be disassembled and cleaned per interval described in ***See Figure 4-2***. The diaphragm and any marginal parts should be replaced. When replacing the service diaphragm, replace the corresponding parts for the other chamber on the same axle (to aid in even brake application and release). Examine yoke pin for wear and replace as necessary. The spring chamber should not be serviced. Replace entire unit (both service and spring chamber) if spring chamber becomes faulty.

WARNING

The spring brake chamber employs a spring with high forces. Service should not be attempted. Serious injury or death may result.

Caging the Power Spring

1. Chock the trailer wheels.
2. Remove dust cap from spring brake chamber.
3. Remove the release bolt from its holding brackets and insert it into the spring brake chamber. DO NOT USE AN IMPACT WRENCH TO CAGE THE SPRING BRAKE.
4. Turn the bolt until the spring brake is caged. This should be 2-1/4 to 2-1/2 inches of release bolt extension.
5. The brakes should now be totally released. Do not operate loaded trailer with brake manually released.
6. To reset the spring brake, turn the release bolt until the spring is released. Remove the release bolt and store it in its brackets.
7. Snap the dust cap back in place on the chamber.

https://truckmanualshub.com/

Removal

1. Chock all tractor and trailer wheels and drain the air system.
2. Mark the brake chamber for proper air line port alignment for reassembly.
3. CAGE THE POWER SPRING following the steps outlined in *"Caging the Power Spring" on page 4-14*
4. Disconnect the slack adjuster from the connecting rod by removing the clevis pin (*See Figure 4-12*)
5. Mark all air service lines for proper reinstallation and disconnect from the brake chamber.
6. Remove the brake chamber from the axle brackets.

Installation

1. CAGE THE POWER SPRING following the steps outlined in *"Caging the Power Spring" on page 4-14*
2. Position the inlet ports by loosening the service chamber clamp bands and rotating center housing such that ports are located according to alignment marks made during disassembly, then retighten the clamp bands.
3. Position the breather hole in the downward facing position by loosening the clamp bands on the spring brake chamber and rotating the chamber housing until the breather hold faces downward. Retighten the clamp bands.
4. Remount the brake chamber on the axle brackets and reconnect the air service hoses and the slack adjuster connecting rod (*See Figure 4-11*)

IMPORTANT

Be sure the service line is on the service chamber port and the emergency line is on the spring brake port.

5. Check for leakage by charging the air system to a minimum of 90 psi and applying soap suds to the brake chamber and connections. If a growing bubble is detected or bubbles are blown away, locate the source of the leak and repair.
6. Ensure that the clamp band is properly seated and tight **before** uncaging the power spring.

Emergency Relay Valve Maintenance

The Emergency Relay Valve should be disassembled, cleaned, and lubricated by a trained technician (*See Table 4-2*.).

WARNING

Repair or replacement of the relay/emergency valve is a complex operation and should be performed by trained service personnel. Contact a Landoll authorized service center or the Landoll factory for servicing.

Brake Assembly Maintenance

The brake assemblies should be inspected and adjusted per interval described in *See Table 4-2*. Examine the brake linings visually to locate the lining showing the greatest amount of wear. The wheel and drum should be removed and the linings replaced if the thinnest portion of the lining is 3/8 in. (9.5 mm) or less. Do not allow the linings to wear thin enough that the lining rivet contacts the drum (*See Table 4-10*.) Lubricate brake assembly per *See Figure 4-1* and *See Table 4-2*.

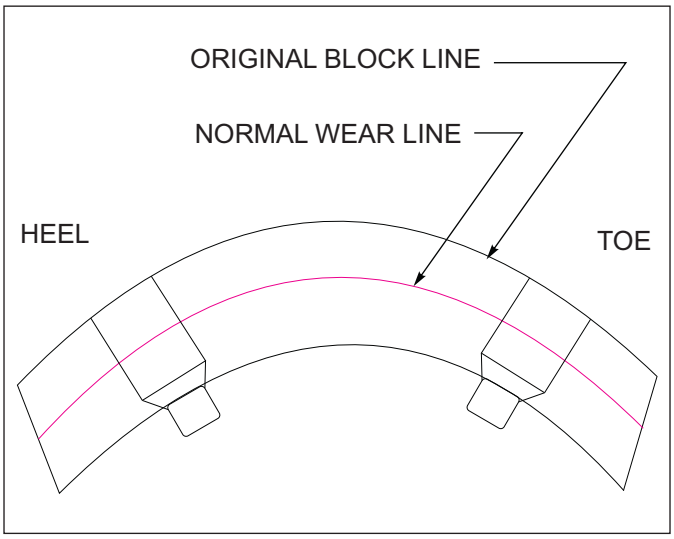

Figure 4-10: Brake Lining Wear

WARNING

Do not allow grease to contact brake linings as this could result in reduced braking performance.

https://truckmanualshub.com/

Brake Adjustment

This semitrailer is equipped with automatic slack adjusters which compensate for brake lining wear and keep brakes adjusted. Brakes should not be adjusted manually except when relining brakes.

Disassembly for 16-1/2” x 7" Brakes

1. Release brakes and back off slack adjuster (***See Figure 4-11***)
2. Remove slack adjuster lock ring and slack adjuster.
3. Remove drum assembly (***See Figure 4-13***)
4. Disengage the roller retainers from the rollers.
5. Press down on the bottom brake shoe and remove the lower cam roller. Lift the top shoe and take out the top cam roller.
6. Lift out the shoe retractor spring, which is now free of tension.
7. Swing the lower shoe back approximately 180° to relieve the tension on the shoe keeper springs. Remove the springs and slip the shoes off the anchor pins.
8. Remove camshaft lock ring, spacer washer(s) and camshaft.
9. After removing the shoes, completely inspect all brake components, servicing as necessary.

Reassembly for 16-1/2 x 7" Brakes

1. Install new anchor pin bushings, camshaft bushing and camshaft seals into the spider.

IMPORTANT

When installing camshaft seals, the seal on the slack adjuster side is facing into spider. This allows grease to purge outside the brake assembly when greasing the camshaft bushing.

2. Install cam roller, retainer clip and retractor spring retainers onto the camshaft.
3. Install 1/8” thick camshaft washer onto the camshaft.
4. Install the camshaft into the spider. Install spacer washer and lock ring retainer on camshaft before sliding the camshaft through the camshaft support bracket. Install the slack adjuster, washer and lock ring retainer.

https://truckmanualshub.com/

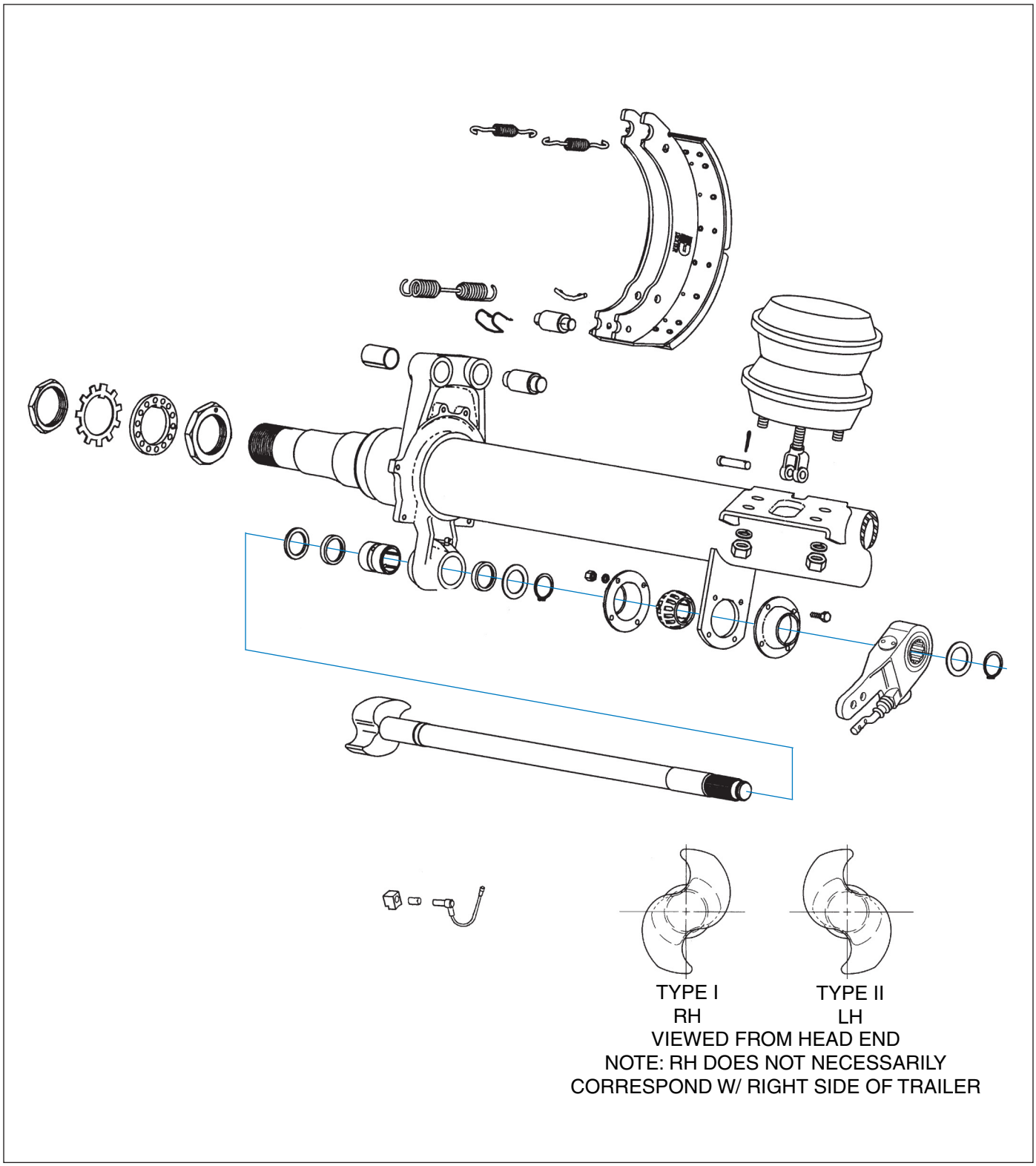

Figure 4-11: Axle and Brake Assembly

5. Install the brake keeper onto the shoes. Install shoes onto the spider by placing shoes in place on the anchor pins, then “wrap” the two shoes into place about the spider.
6. Install the shoe retractor spring onto the shoes.
7. Connect slack adjuster to brake chamber pushrod.
8. Adjust automatic slack adjuster as outlined in ***“Adjusting Slack Adjuster” on page 4-19***.

https://truckmanualshub.com/

Automatic Slack Adjuster

The semitrailer automatic slack adjusters provide the means for routine brake adjustment to compensate for lining wear. Inspect slack adjusters to assure correct operation (***See Table 4-2***.)

WARNING

The installation guide must be used when installing or reinstalling automatic slack adjuster. Failure to do so may result in improperly adjusted brakes which may cause brake damage or lead to brake failure.

Operational Check

1. Block wheels to prevent vehicle from rolling.
2. Check that the push rod is fully retracted, apply air to release spring brake (***See Figure 4-12***.)
3. Turn adjustment hex counterclockwise to create an excessive clearance condition. (A ratcheting sound will occur.) ***"Adjusting Slack Adjuster" on page 4-19***
4. Make a full service brake application. On release, allow sufficient time for brake to fully retract. During the brake release, observe rotation of the adjustment hex (attach a wrench on the hex to make this movement easier to see). This rotation indicates that an excessive clearance condition has been determined by the slack adjuster, and it is making an adjustment to compensate. On each subsequent brake release the amount of adjustment and push rod travel will be reduced until the desired clearance is achieved
5. The push rod stroke should be 1-1/2" to 2" with a 100 to 105 PSI service brake application.
6. Measure the movement of the push rod from the completely released position to the applied position by marking the push rod where it exits the air chamber before and after application.
7. If the brakes have been running tight, the control arm location should be checked.

WARNING

If the adjuster appears not to be operating, check the other brake components for proper function and eliminate any binding. Recheck the automatic slack adjuster. If the adjuster is not functioning, the unit must be replaced because failure of proper adjustment function will result in loss of brakes.

Replacing Slack Adjuster

1. Chock wheels to prevent vehicle from rolling. Release spring and service brake. Air chamber push rod must be **fully released.**
2. To maintain a fully released parking brake, a minimum of 105 psi reservoir pressure must be maintained. If air pressure is not available the spring brake must be manually caged.
3. Remove the existing slack adjuster and clevis - DO NOT REMOVE EXISTING JAM NUT.
4. Install the new clevis (with 1/2" pin) onto the push rod up to the jam nut - DO NOT TIGHTEN JAM NUT.
5. Fit the installation guide over the cam splines so the 1/2" pin slots face the air chamber.
6. Swing the guide into the clevis until the appropriate slot totally engages 1/2" pin.
7. Observe the guide pointer arrow:
   If the guide pointer is above the clevis pointer, adjust clevis COUNTER CLOCK WISE for alignment.
   If the guide pointer is below the clevis pointer, adjust clevis CLOCK WISE for alignment.
8. Reposition clevis until the guide pointer aligns with the clevis pointer.
9. Verify by engaging 1/4" pin through the clevis and guide.
10. Tighten jam nut to 50 ft.-lbs. torque min.
11. Remove the guide from cam shaft.
12. If the push rod threads extend through the clevis more than 1/16", remove clevis and cut rod to length.
13. If the push rod is not fully engaged in clevis body, install a new push rod - cut to length.
14. Install the slack adjuster on the cam shaft.
15. Rotate the manual adjuster shaft CLOCK WISE until the slack adjuster arm holes align with the clevis. Install 1/2" and 1/4" pins and cotter pins.

https://truckmanualshub.com/

Adjusting Slack Adjuster

1. Rotate the manual adjuster clockwise until brake shoes contact drum.
2. Back off manual adjuster 1/2 turn. (counterclockwise)
3. Manually uncage the spring brake.
4. Build up vehicle air pressure.
5. Fully apply and release the brakes several times to check for adequate clearance to all adjacent components.
6. Measure the distance from air chamber to 1/2” pin. Apply brakes with 100-105 psi air pressure and remeasure distance to 1/2” pins.

NOTE

The stroke (difference of these two measurements) must be less than 2 inches.

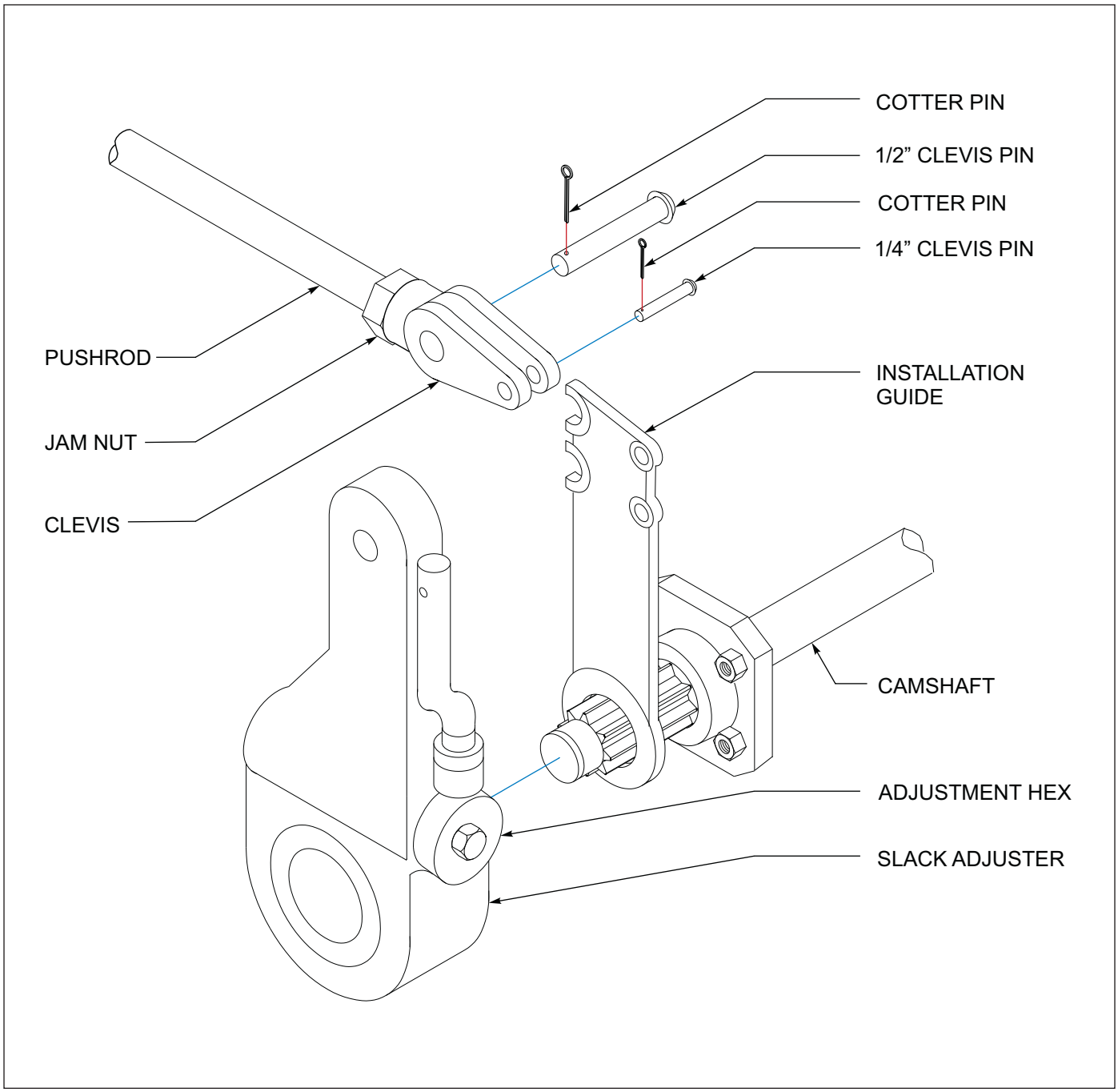

Figure 4-12: Slack Adjuster

https://truckmanualshub.com/

Hub and Drum Maintenance

WARNING

Failure to replace faulty brake drums will result in an unreliable braking system, and may lead to an accident.

1. Clean and inspect the brake drums whenever relining the brakes. To be suitable for further service, the brake drum should pass the following checks.
   a. The brake surface should be free of scoring, excessive heat checks and cracks.
   b. The brake surface diameter should be within the maximum diameter cast or stamped on the drum.
   c. The mounting holes and pilot must be round and true.
   d. The mounting surface must be clean and flat.
2. It may be necessary to turn or resurface the braking surface to remove small heat checks or other surface defects resulting from normal use.
   a. The maximum diameter cast into the back plate portion of the brake drum is the maximum diameter or discard diameter to which the brake drum may be turned or worn and still be usable. If any portion of the brake surface exceeds the maximum diameter it must be discarded. The maximum is .120 over the nominal new diameter unless stated otherwise on the casting. The maximum diameter cast into the brake drum supersedes all published information.
   b. When resurfacing a drum, allow at least 0.040 inches under the maximum diameter for additional wear.

WARNING

Turning a brake drum beyond 0.040 inches under the maximum diameter will result in a weaker brake drum and may result in an accident.

3. Replacement of the brake drum is required if any of the following conditions exist:
   a. The brake drum is cracked.
   b. The brake surface is heat checked, grooved or worn beyond the rebore limit or the maximum diameter.
   c. The back plate is cracked.
   d. The bolt holes are elongated.
   e. The brake drum has been severely overheated.
   f. The brake drum is out-of-round.

CAUTION

Replace brake drums in pairs to achieve the same braking power on both wheels and maintain an even braking load on the axle. Failure to do this may significantly reduce the performance, service life, and/or safety of your vehicle.

4. Replace the hub and drum as follows: **(*See Figure 4-13*)**
   a. Remove the brake drum. It may be necessary to release the slack adjuster.
   b. Remove hub cap and catch lubricant in a pan.
   c. Remove outer spindle nut, spindle locking washer, inner spindle nut, and bearing. Remove hub from axle.
   d. Using an appropriate driver, remove inner bearing cone, and seal.
   e. Using an appropriate driver, remove bearing cups from hub.
   f. Check that the hub cavity is clean. If the hub is to be reused, clean it thoroughly.
   g. Insert bearing cups into the hub.
   h. Clean the mounting surfaces with a good grade commercial cleaner and soft rag. Dry all component parts with a clean, absorbent cloth or paper. Lubricant will not adhere to surfaces wet with solvent.
   i. Place the drum over the hub and brake shoes being careful not to damage the threads on the studs **(*See Figure 4-13*.)** Make sure the drum seats flat against the hub flange and mates properly with the hub pilot. There should be no interference between the brake drum pilot chamfer and the corner radius on the hub. If interference exists, the hub will not be able to function properly.
   j. Install inner bearing, cone, and seal.
   k. If studs are marked “R” or “L”, right hand ®) hubs should be installed on the curbside of the vehicle, left hand (L) hubs should be installed on the driver side.

NOTE

Do not mix new cups with old cones or new cones with old cups.

https://truckmanualshub.com/

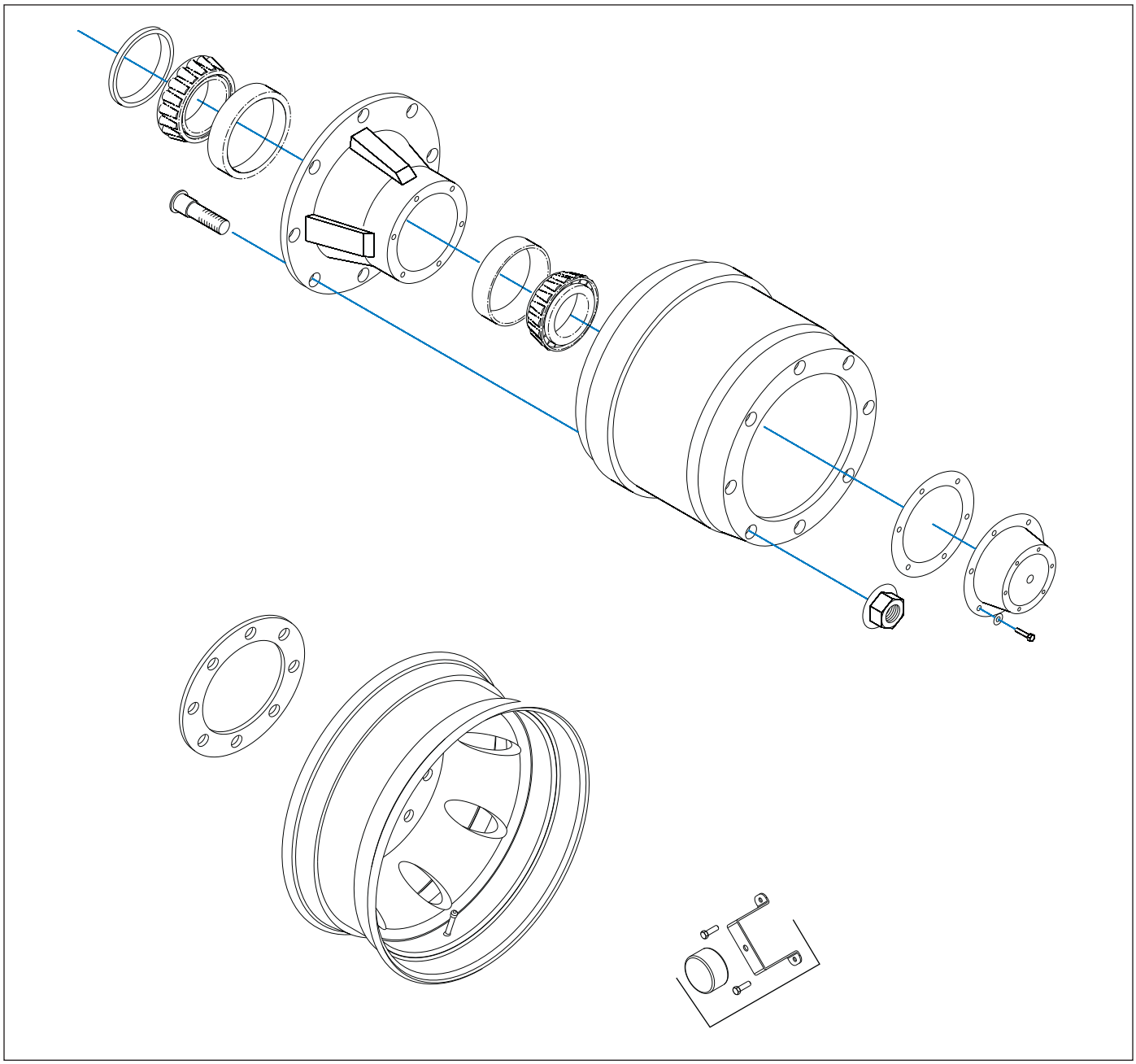

Figure 4-13: Outboard Mount Hub and Drum

WARNING

Failure to use the correct stud on the correct side may cause loosening of the hub studs during operation, resulting in loss of a wheel.

l. Place the hub or wheel over the axle spindle being careful to align the hub bore with the axle. Do not damage the seal. Support the hub assembly until the outer bearing cone and spindle nut are installed, to avoid damaging the seal.

m. Install the outer bearing cone and inner spindle nut, tightening the nut until it is snug against the outer bearing cone. Remove the hub support allowing the hub to rest on the bearings.

n. Install and adjust bearings *"Wheel Bearing Lubrication and Adjustment" on page 4-22)*

o. Install the hub cap with the proper gasket. Tighten the cap screws of the hub cap to 15 to 20 ft.-lbs. of torque.

p. Remove the filler plug and fill the hub cavity to the recommended level with a gear type oil.

https://truckmanualshub.com/

Wheel Bearing Lubrication and Adjustment

With semitrailer sitting level, the oil level must be checked daily and maintained between the “ADD” and “FULL” lines on the hub cap window. Check for cracked windows, missing filler plugs, and oil leaks. Add hub oil through the “POP-IN” filler plug located in the center of the hub windows. Re-install the “POP-IN” plugs after filling each hub. Adjust wheel bearings and change oil per ***See Table 4-2***or with each brake lining replacement, whichever occurs first.

Adjustment

1. With a drain pan under the hub cap, remove the hub cap assembly allowing oil to drain.
2. Lift the wheel off of the ground.
3. Adjust slack adjuster to eliminate brake drag during tire/wheel rotation.
4. Remove outer lock nut and inner nut and lock washer.
5. Tighten the inner adjustment nut to a minimum of 75 ft.-lbs., while rotating wheel to ensure proper seating of the bearings and cups in the wheel hub.
6. Loosen the inner adjustment nut so that the wheel will turn freely.
7. Retighten the inner adjustment nut to 50 ft.-lbs. while rotating the wheel, to properly position the bearings for the final adjustment.
8. Loosen the inner adjustment nut 1/3 turn.
9. Install the spindle nut lock washer so that the dowel on the inner nut will align with a hole in the lock washer and the washer tang fits in the spindle keyway.
10. Install the outer lock nut and tighten to 250-300 ft.-lbs. End-play of .001" to .010" must be present in the adjusted wheel bearing assembly.

DANGER

Failure to torque the outer lock nut properly could cause the wheel to come off during vehicle operation resulting in property damage or loss of life.

11. Install the hub cap with a new gasket and fill with oil to the full mark **(*See Table 4-1*.)**
12. Adjust brakes according to ***“Brake Adjustment” on page 4-16*.**
13. Check hub oil level after the wheel has set level in one position for a few minutes to allow the oil to work into the bearings.

Tire Maintenance

Tire Inflation

Tire inflation will cause tire to ground contact characteristics as shown in ***See Figure 4-14*.** Tire inflation should be checked daily while the tire is cold, and during road stops. Checking the tire pressures while tires are hot will give a faulty increased pressure reading. Adjusting tire air pressure to the specified amount while tires are hot will produce improper tire to road contact and thus abnormal wear. Do not exceed cold inflation pressure listed on the semitrailer VIN plate located on the front of the trailer. Exceeding cold inflation pressure will result in damaged tire bodies, rims, and wheels. Replace all valve stem caps when pressure checking/adjusting has been completed. Remove any foreign objects from between duals.

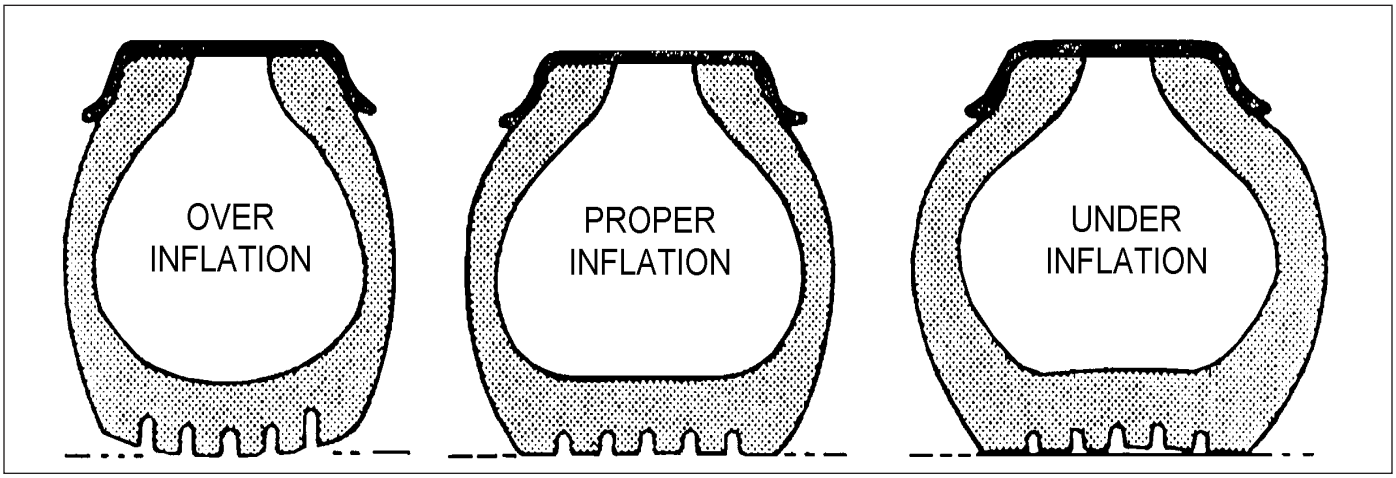

Figure 4-14: Tire Inflation Examples

https://truckmanualshub.com/

Tire Matching

Both tires on the same spindle must be the same size in order to properly distribute the load and braking forces between them. The tire must be mounted on a rim and properly inflated before measuring. If there is an allowable difference in size the smaller tire should be mounted to the inside position of the duals.

Tape Measuring Method

Measure around each tire on the tread surface. A maximum difference of 3/4” is allowed between the two mating tires of a dual (***See Figure 4-15.***)

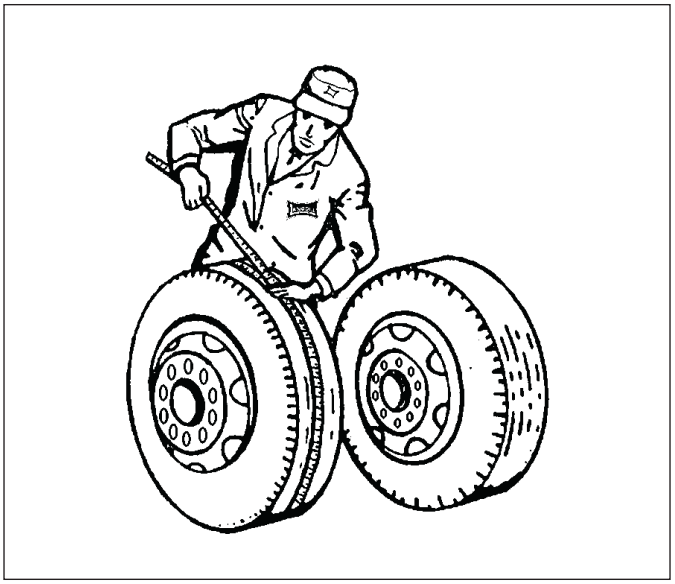

Figure 4-15: Measuring Tape Method

Tire Changing Procedure

1. Set tractor brakes
2. Set trailer brakes.
3. Place jack under trailer frame (not under axle) and lift until tire clears ground.
4. If trailer is loaded, place jack under each side of trailer frame and lift trailer evenly.

Straight Edge or String Method

(This method cannot be used if tire and wheel assemblies are not mounted on the axle.) Jack trailer up until the wheels are off of the ground. Hold a straight edge against the tires of both ends of an axle. A gap at one tire indicates a smaller tire. A maximum of 1/8” gap is allowed (***See Figure 4-16.***)

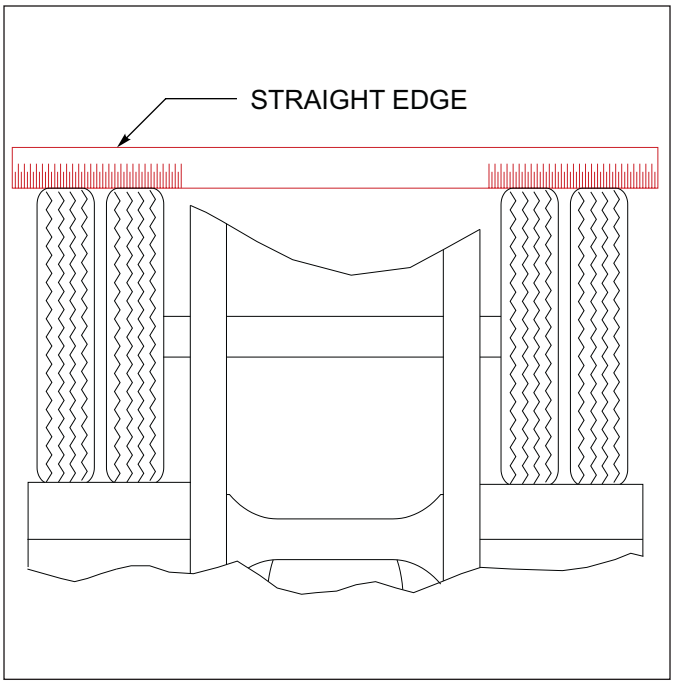

Figure 4-16: Straight Edge Method

Mounting Tire and Wheel

1. Make sure that all mounting surfaces are clean and free of rust, dirt or paint. A wire brush may be used to clean these surfaces (***See Figure 4-17.***)
2. Position the inner disc wheel over the studs, being careful not to damage the stud threads. Make sure that the disc wheel is flat against the mounting surface and that there is clearance between the disc wheel taper and brake drum.
3. Position the outer disc wheel being careful not to damage the threads. Be sure the valve stems for both the inner and outer tire are accessible.
4. Install the flange nut and tighten to 50 foot-pounds using the sequence in ***See Figure 4-18.*** Then tighten to full torque of 500 to 550 foot-pounds.
5. Torque will drop after the first 50 to 100 miles of operation. Check the nuts for proper torque after this interval and retighten them.

WARNING

Use a torque wrench to assure proper torque. Insufficient torque can cause stud breakage and damage wheel pilots. Overtorque can overstress the studs and strip the threads.

https://truckmanualshub.com/

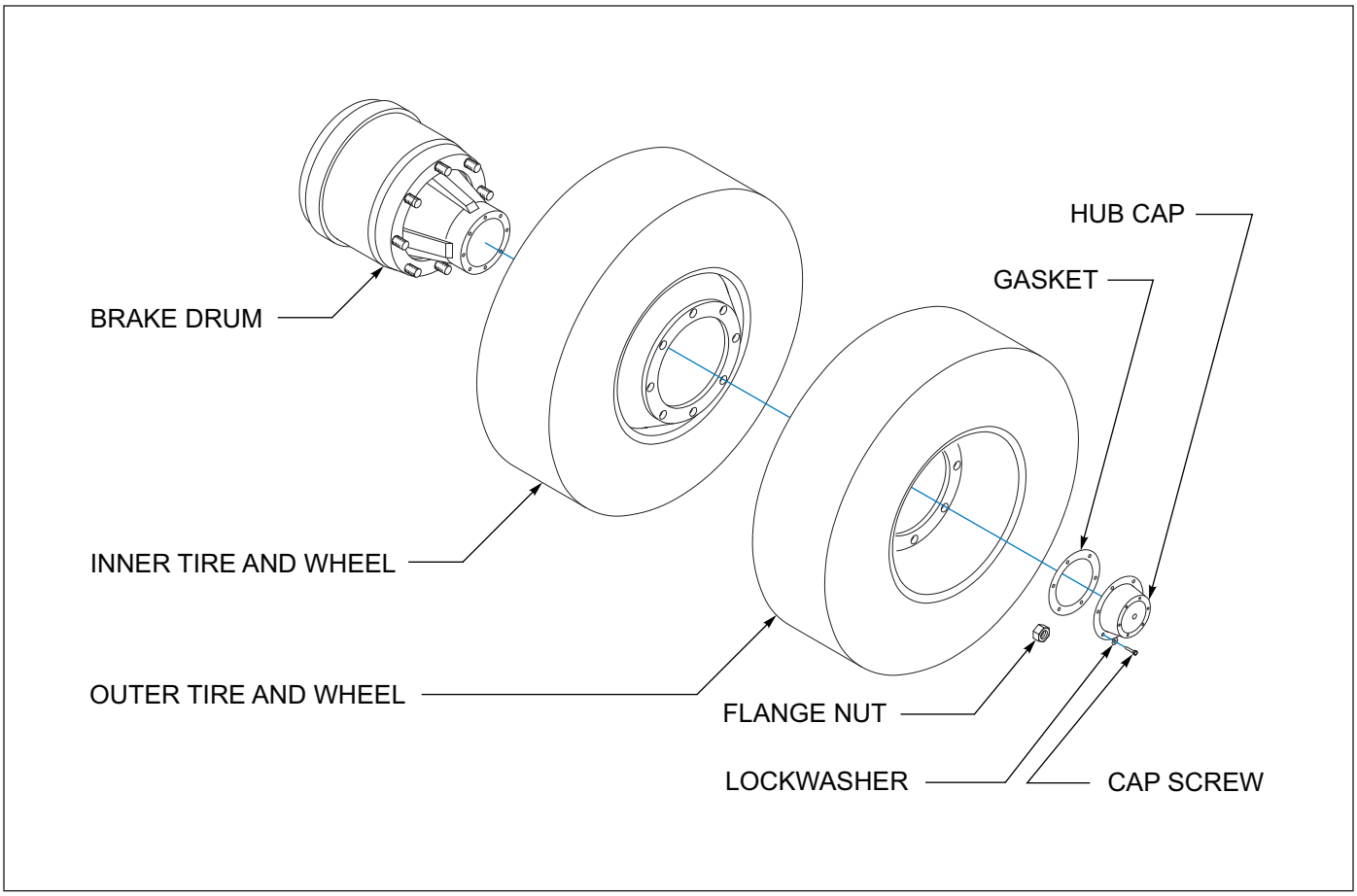

Figure 4-17: Mounting Tires and Wheels

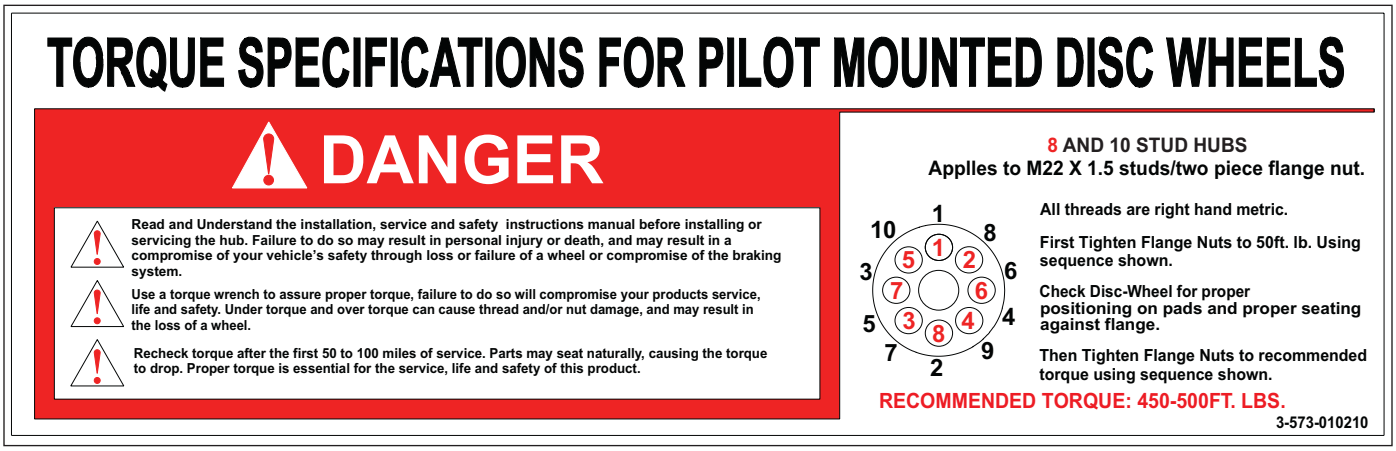

Figure 4-18: Stud Tightening Sequence

https://truckmanualshub.com/

Rocking Upper Coupler Maintenance

The rocking upper coupler requires very little maintenance. Primary item is to include the upper coupler in the routine greasing portion of a normal maintenance program. Three grease zerks are located on the roadside of the coupler and require only a slight amount of grease at each periodic greasing. The only other maintenance is to ensure adequate grease is on the surface between the coupler and the fifth wheel, *See Figure 4-1*.

Gate Control Valve Service

To clean, inspect and lubricate the valve is easily removed from the subplate by removing the three mounting screws. It is not necessary to disconnect the piping or to remove the subplate for most servicing requirements.

1. Disassemble the valve in clean and well-lit area. Clean all metal parts in a non-flammable solvent and wash all rubber parts in soapy water. Rinse all parts and thoroughly dry with a low pressure air hose. Replace damaged or worn parts. Removal of the internal plug is not recommended unless replacement is required.
2. Worn parts can be replaced by removing the four bleeding housing screws and the four operator handle housing screws and sliding the spool out of the valve.
3. Reassembly the valve. No special tools are required. When the “U” cup of the piston is replaced, ensure the two lip seals face toward the operator handle end of the valve.
4. Lubricate all metal-to-metal surfaces with an appropriate pneumatic grade lubricant.

Clamshell Gate Air System Filter

1. Remove and clean the clamshell gate air filter periodically by tapping on hard surface and blowing the air filter out with an air gun.
2. Drain the bowl at least once per work shift.

Clamshell Gate Air Lubricator

1. Dirty oil contaminants can collect on the siphon tube inlet filter. Clean the filter by tapping it on a hard surface and blowing it off with an air gun.
2. If the oil delivery rate drops below the three drops per cycle required the lubricator should be cleaned. Remove the variable orifice and clean the air passage with a small wire. Check the bore the screw threads into for contaminants and clean if necessary. Ensure the passageway from the sight dome cavity into the variable orifice post is open. Remove the oil flow adjusting screw and clean the needle and seat in the body. Inspect and clean the passage from the needle seat into the adapter.
3. Drain any contaminants that collect in the bottom of the bow.

https://truckmanualshub.com/

https://truckmanualshub.com/

Troubleshooting Guide

Troubleshooting should be performed by a trained and competent technician. Landoll Corporation is not responsible for equipment that is improperly maintained. Contact an authorized Landoll Service center for servicing.

Electrical

Most electrical system problems show up as a burned out light or fuse, or inoperative electrical component. Wiring, grounds, or components may be at fault. Locate the symptom in this section that best identifies your electrical problem. Check out each possible problem under that symptom. If the problem cannot be located, see an automotive electrical specialist. For maintenance procedures see *"Electrical System" on page 4-7*.

PROBLEM	PROBABLE CAUSE	SOLUTION
NO LIGHTS	Fuse blown	Replace fuse
	Connection at plug-in	Tighten connection
	Broken or corroded wires	Replace wire
	Ground wire loose	Clean and tighten ground
LIGHTS FLICKERING	Wires shorted or loose	Locate, insulate, replace, or tighten
	Grounding through fifth wheel	Locate broken ground wire (tractor or semitrailer)
LIGHTS DIM	Voltage difference between semitrailer and tractor	Match bulbs with tractor voltage
	Grounding through fifth wheel	Locate broken ground wire (tractor or semitrailer)
LIGHTS BRIGHT AND BURN OUT	Voltage difference between semitrailer and tractor	Match bulbs with tractor voltage
FUSE BLOW-OUT OR CIRCUIT BREAKER TRIPPING	Vibration	Locate source of vibration and repair
	Short circuit	Replace fuse and try all accessories. If fuse blows right away, locate short and repair
LAMP BULB BURN OUT	Vibration	Locate source of vibration and repair
	Short circuit	Replace fuse and try all accessories. If fuse blows right away, locate short and repair
	Loose connection	Check lamp sockets and ground connections
	Intermittent short	Locate short and repair
	Improper voltage	Check voltage regulator output
NEW BULB DOESN'T WORK	Wires switch	Switch power and ground wires at light

https://truckmanualshub.com/

Tires - Wheels - Suspension

Most tire, wheel, and suspension related problems are due to excessive loads, extreme conditions, and improper maintenance. Tire, wheel, and suspension problems can be easily detected and solved by checking the following guide. For maintenance procedures, refer to the following sections:

- *"Alignment" on page 4-11*
- *"Brake System Maintenance" on page 4-14*
- *"Wheel Bearing Lubrication and Adjustment" on page 4-22*
- *"Tire Maintenance" on page 4-22*

PROBLEM	PROBABLE CAUSE	SOLUTION
VIBRATIONS WHILE DRIVING	Improper tire inflation	Inflate to proper pressure *(See "Tire Maintenance" on page 4-22.)*
	Tires cupped or have flat spots	Replace tires.
	Wheels bent or loose	Replace or tighten.
	Tires incorrectly mounted	Remount *(See "Tire Changing Procedure" on page 4-23.)*
	Mud in wheels	Clean wheels.
	Tire(s) out of balance	Balance tires.
	Brakes dragging	Locate cause and repair.
	Object(s) stuck between duals	Remove object(s).
RAPID TIRE WEAR/DETERIORATION:		
CENTER TREAD WEAR	Over inflation	Deflate to correct inflation *(See "Tire Inflation" on page 4-22.)*
SHOULDER TREAD WEAR - BOTH SHOULDERS	Under inflation	Increase inflation to correct PSI. Check axle alignment *(See "Tire Inflation" on page 4-22.)*
	Overload	Loads are above rated tire capacity. DO NOT load above rated tire capacity.
SHOULDER TREAD WEAR - ONE SHOULDER	Axle damage	Straighten or replace axle *(See "Axle Alignment" on page 4-13.)*
	Axles not parallel	Check axle alignment.
OVERALL TREAD WEAR	Overloading	Check tire load rating.
	High speeds	Adjust speed according to road and load conditions.
	Incorrect dual matching	Properly match dual tires *(See "Tire Matching" on page 4-23.)*
TIRE FLAT SPOTS	Quick stops	Adjust braking practices.
	Grabbing brakes	Adjust brakes properly *(See "Brake Adjustment" on page 4-16.)*
	Worn or loose wheel bearings	Adjust or replace as needed *(See "Hub and Drum Maintenance" on page 4-20.)*
	Out of balance wheels and tire	Balance wheels and tires. Check ABS system function.
UNEVEN WEAR	Suspension bushings worn	Replace bushings *(See "Hub and Drum Maintenance" on page 4-20.)*
	Worn or loose wheel bearings	Adjust or replace as needed.
	Out of balance wheels and tires	Balance wheels and tires.

https://truckmanualshub.com/

PROBLEM	PROBABLE CAUSE	SOLUTION
**** RIM FAILURE**		
CRACKING	Overinflated tires	Deflate tire to proper PSI.
	High speeds	Adjust speed according to road and load conditions.
	High speed cornering	Adjust cornering practices.
	Over loading	Check rim load rating.
****IN ALL INSTANCES OF RIM FAILURE, REPLACE THE RIM IMMEDIATELY!**		
BENDING OR WARPING	Curb-hopping or potholes	Adjust turning practices and adjust speed accordingly with road conditions.
	Improper tightening sequence	Follow proper tightening sequence (***See Figure 4-18***)
BROKEN STUDS	Over tightening	Use correct torque when mounting ***(See "Specific Bolt Torque" on page 2-2.)***
***REPLACE BROKEN STUDS BEFORE USING THE SEMITRAILER!**		
SEMITRAILER TRACKING PROBLEMS:		
TRACKS TO ONE SIDE	Axle alignment	Re-align axle ***(See "Axle Alignment" on page 4-13.)***
TRACKS TO EITHER SIDE	Broken or bent springs or equalizers	Replace defective parts.
	Axles not parallel	Re-align axles
AIR RIDE HEIGHT PROBLEMS:		
TOO HIGH	Axle to control valve linkage	Readjust linkage.
	Height Control Valve internal leak	Repair or replace valve.
TOO LOW	Axle to control valve linkage	Readjust linkage.
	Height Control Valve filter plugged	Clean or replace valve.
	Pressure Protection Valve filter plugged	Clean or replace valve.
	System air pressure low (65 PSI minimum required)	Troubleshoot air supply.
UNEVEN FROM SIDE TO SIDE	Linkage adjustment	Readjust linkage
	Exhaust port plugged	Clean or replace valve(s).
	Height control valve internal leak	Repair or replace valve.
	Supply line to one height control valve pinched, restricted, or plugged	Repair or replace line.

https://truckmanualshub.com/

Brakes

For maintenance procedures, see *"Brake System Maintenance" on page 4-14*.

PROBLEM	PROBABLE CAUSE	SOLUTION
NO BRAKES OR BRAKES ARE INTERMITTENT	Brake air system improperly connected	Reconnect hand valves properly.
	Relay/Emergency valve plugged	Clean valve.
	Defective tractor protection valve	Repair or replace.
	Restricted tubing or hose line	Locate and eliminate restriction.
	Broken line	Locate break and repair.
	Tractor air system failure	Troubleshoot tractor air system and repair. Check ABS system function.
SINGLE BRAKE DRAGGING OR LOCKED	Broken internal brake component	Locate and replace missing and broken parts *(See "Hub and Drum Maintenance" on page 4-20.)*
	Flat spot on cam roller or cam shaft	Replace and lubricate.
	Improper adjustment	Adjust slack adjusters *(See "Adjusting Slack Adjuster" on page 4-19.)*
	Spider bushing or cam bracket bushing binding	Lubricate or replace bushing.
	Improper lubrication	Lubricate per *Figure 4-1.*
	Worn brake shoe bushing	Replace bushing.
	Brake drum distortion	Replace drum.
	Broken brake chamber spring	Replace spring.
	Brake chamber pushrod binding	Re-align brake chamber bracket.
	Air brake line loose or broken	Tighten or repair.
UNEVEN BRAKES	**See "SINGLE BRAKE DRAGGING OR LOCKED"**	
	Restriction in hose	Locate restriction and remove
	Worn brake linings	Reline brakes.
	Grease on linings	Reline brakes.
	Broken slack adjuster	Replace slack adjuster *(See "Replacing Slack Adjuster" on page 4-18.)*
	Leaking brake chamber diaphragm	Replace diaphragm.
BRAKES APPLY TOO SLOWLY	Brakes need adjusting or lubrication	Adjust or lubricate as needed.
	Low air pressure in brake system (below 105 PSI)	Check tractor air system.
	Restricted tubing or hose	Locate restriction and remove.
	Defective relay valve	Clean or replace.
	Call Factory or see qualified Trailer/Brake Technician	
BRAKES RELEASE TOO SLOWLY	Brakes need adjusting or lubrication	Adjust or lubricate as needed.
	Brake rigging binding	Align brakes or replace bent parts.
	Exhaust port of relay valve restricted or plugged	Clean valve.
	Tractor pressure too low	Adjust to provide 105 psi min.

https://truckmanualshub.com/

PROBLEM	PROBABLE CAUSE	SOLUTION
ALL BRAKES DO NOT RELEASE	Air system improperly connected to tractor	Tighten or adjust connections.
	Brake valve on tractor is applied	Release brake
	Relay emergency valve in emergency position	Check line pressure and check valve
	Restricted tubing or line	Locate restriction and remove
	Defective tractor protection valve	Troubleshoot tractor air system.
	Parking brakes locked	Troubleshoot air system
	Moisture in air system	Check air system
	Tractor pressure too low	Adjust to provide 105 psi min.
INSUFFICIENT BRAKES	Brakes need adjusting	Adjust brakes *(See "Brake Adjustment" on page 4-16.)*
	Brakes need lubricating	Lubricate brakes
	Brakes need relining	Reline brakes
	Low air pressure	Troubleshoot air system.
	Defective relay emergency valve	Repair or replace.
	Brakes overheated	Stop and allow brakes to cool, locate cause of overheating.
BRAKES GRABBING	Grease on brake linings	Reline brakes
	Brake rigging binding	Align brakes or replace bent parts.
	Defective brake valve on tractor	Repair or replace valve.
	Defective relay emergency valve	Repair or replace valve.
EXCESSIVE LEAKAGE WITH BRAKES RELEASED	Relay emergency valve leaking	Repair or replace valve
	Leaking tubing or hose	Replace defective part.
EXCESSIVE LEAKAGE WITH BRAKES APPLIED	Relay emergency valve leaking	Repair or replace valve.
	Leaking brake chamber diaphragm	Replace diaphragm.
	Call Factory or see qualified Trailer/Brake Technician	
	Leaking tubing or hose	Replace defective part.
EXCESSIVE LEAKAGE WITH EMERGENCY SYSTEM ONLY APPLIED - NO LEAKAGE WITH NORMAL BRAKING	Defective relay emergency valve	Repair or replace valve.
EXCESSIVE WATER PRESENT IN BRAKE SYSTEM	Reservoir not drained often enough	Drain reservoir daily.
EXCESSIVE OIL PRESENT IN BRAKE SYSTEM	Compressor on tractor passing excessive oil	Repair compressor.
BRAKE WILL NOT APPLY PROPERLY	Flat spot on cam roller or camshaft	Replace and lubricate.
BRAKES WILL NOT APPLY WHEN EMERGENCY LINE IS DISCONNECTED	Initial air pressure too low	Allow air system to build up to minimum 90 PSI and stabilize.
	Defective relay valve	Repair or replace valve.
	Air line leak	Locate leak and repair.
	Brake chamber leak	Locate leak and repair or replace.
ABS WARNING LIGHT STAYS ON	Refer to Rockwell WABCO ABS maintenance manual supplied with semitrailer, for system function and use of blink code diagnostics.	

https://truckmanualshub.com/

Brake Drums

For maintenance procedures, refer the following sections:

- *"Alignment" on page 4-11*
- *"Brake System Maintenance" on page 4-14*
- *"Hub and Drum Maintenance" on page 4-20*
- *"Wheel Bearing Lubrication and Adjustment" on page 4-22*

PROBLEM	PROBABLE CAUSE	SOLUTION
EXCESSIVE LOSS OF BRAKES OR FADING	Overheated brake drums	Check for defective or misadjusted brake linings, distorted or over-machined drums. Also check for operating conditions or loads that create severe or excessive brake applications.
BRAKES PULL TO EITHER SIDE	Drums of different diameters	Replace with drums of same diameter.
	Foreign matter in drums	Clean drums out.
ROUGH OR NOISY BRAKING ACTION	Defective drums	Pull drums and inspect for any of the following; Heat spotted drums, grease spotting, blue drums, scored drums, excessive wear at rivet holes or edges, polished drums, out of round drums, unbalanced drums, worn/damaged brake components, foreign matter in drums. Correct situation or replace defective part(s).
VIBRATION IN RIDE	Defective drums or out-of-round	Replace drums.
	Out-of-balance drums	Balance drums.

https://truckmanualshub.com/

Document Control Revision Log:

Date	Form #	New/Updated	Improvement(s): Description and Comments
06/2019	F-1044	NEW	New Operators Manual Released

https://truckmanualshub.com/

Equipment from Landoll Corporation is built to exacting standards ensured by ISO 9001 registration at all Landoll manufacturing facilities.

302D-B/305D-B
Operators Manual

Re-Order Part Number F-1044-0719

LANDOLL CORPORATION
1900 North Street
Marysville, Kansas 66508
(785) 562-5381
800-428-5655 ~ WWW.LANDOLL.COM

Copyright 2019. Landoll Corporation
"All rights reserved, including the right to reproduce this material or portions thereof in any form."

Scan to go to www.landoll.com