https://truckmanualshub.com/

1150M
Tier 4B (final)
Crawler Dozer
PIN NGC105100 and above

SERVICE MANUAL

Part number 48080033
1st edition English
January 2017

CASE CONSTRUCTION

https://truckmanualshub.com/

SERVICE MANUAL

1150M Long Track (LT) - Tier 4B (final) and Stage IIIB [NGC105100 -]
1150M Wide Track (WT) / Low Ground Pressure (LGP) - Tier 4B (final) and Stage IIIB [NGC105100 -]

48080033 31/01/2017

EN

Find manuals at https://best-manuals.com

https://truckmanualshub.com/

Link Product / Engine

Product	Market Product	Engine
1150M Long Track (LT) - Tier 4B (final) and Stage IIIB [NGC105100 -]	North America	F4HFE613F*A002
1150M Wide Track (WT) / Low Ground Pressure (LGP) - Tier 4B (final) and Stage IIIB [NGC105100 -]	North America	F4HFE613F*A002

Find manuals at https://best-manuals.com

https://truckmanualshub.com/

Contents

INTRODUCTION

Engine 10

[10.001] Engine and crankcase 10.1

[10.202] Air cleaners and lines 10.2

[10.206] Fuel filters 10.3

[10.216] Fuel tanks 10.4

[10.304] Engine lubrication system 10.5

[10.310] Aftercooler 10.6

[10.400] Engine cooling system 10.7

[10.414] Fan and drive 10.8

[10.500] Selective Catalytic Reduction (SCR) exhaust treatment 10.9

Hydrostatic drive 29

[29.218] Pump and motor components 29.1

Brakes and controls 33

[33.110] Parking brake or parking lock 33.1

[33.202] Hydraulic service brakes 33.2

Hydraulic systems 35

[35.000] Hydraulic systems 35.1

[35.300] Reservoir, cooler, and filters 35.2

[35.104] Fixed displacement pump 35.3

[35.105] Charge pump 35.4

[35.359] Main control valve 35.5

[35.741] Dozer blade cylinders 35.6

Tracks and track suspension 48

[48.130] Track frame and driving wheels 48.1

[48.100] Tracks 48.2

Find manuals at https://best-manuals.com

[48.134] Track tension units 48.3
[48.138] Track rollers 48.4
[48.AAA] Tracks and track suspension generic sub-group 48.5

Cab climate control 50
[50.100] Heating 50.1
[50.104] Ventilation 50.2
[50.200] Air conditioning 50.3

Electrical systems 55
[55.000] Electrical system 55.1
[55.011] Fuel tank system 55.2
[55.014] Engine intake and exhaust system 55.3
[55.015] Engine control system 55.4
[55.030] Service brake electrical system 55.5
[55.050] Heating, Ventilation, and Air-Conditioning (HVAC) control system 55.6
[55.100] Harnesses and connectors 55.7
[55.201] Engine starting system 55.8
[55.202] Cold start aid 55.9
[55.301] Alternator 55.10
[55.302] Battery 55.11
[55.408] Warning indicators, alarms, and instruments 55.12
[55.512] Cab controls 55.13
[55.518] Wiper and washer system 55.14
[55.988] Selective Catalytic Reduction (SCR) electrical system 55.15
[55.DTC] FAULT CODES 55.16

Dozer blade and arm 86
[86.110] Dozer blade 86.1
[86.124] Dozer pushbeams and struts 86.2

Platform, cab, bodywork, and decals 90

Find manuals at https://best-manuals.com

[90.150] Cab 90.1
[90.160] Cab interior trim and panels 90.2
[90.120] Mechanically-adjusted operator seat 90.3
[90.124] Pneumatically-adjusted operator seat 90.4
[90.100] Engine hood and panels 90.5

Find manuals at https://best-manuals.com

https://truckmanualshub.com/

Find manuals at https://best-manuals.com

https://truckmanualshub.com/

INTRODUCTION

Find manuals at https://best-manuals.com

https://truckmanualshub.com/

Contents

INTRODUCTION

Foreword - Important notice regarding equipment servicing (*) 3
Safety rules (*) 4
Safety rules - Personal safety (*) 5
Safety rules - Ecology and the environment (*) 7
Safety rules - Do not operate tag (*) 8
Torque - Minimum tightening torques for normal assembly (*) 9
Torque - Standard torque data for hydraulics (*) 14
Torque - Standard torque data for hydraulic connections (*) 30
Torque - Special torques (*) 37
Basic instructions - Shop and assembly (*) 40
Engine cooling system - Basic instructions (*) 42
Maintenance chart 44
Basic instructions - Moving a disabled machine (*) 46
Hydraulic contamination (*) 55
Consumables Loctite® Product Chart (*) 56
Conversion factors (*) 62
General specification (*) 64
Capacities 68
General specification 69
Product identification 71
Product identification - Machine orientation 74

(*) See content for specific models

Find manuals at https://best-manuals.com

https://truckmanualshub.com/

Foreword - Important notice regarding equipment servicing

1150M	NA

All repair and maintenance work listed in this manual must be carried out only by qualified dealership personnel, strictly complying with the instructions given, and using, whenever possible, the special tools.

Anyone who performs repair and maintenance operations without complying with the procedures provided herein shall be responsible for any subsequent damages.

The manufacturer and all the organizations of its distribution chain, including - without limitation - national, regional, or local dealers, reject any responsibility for damages caused by parts and/or components not approved by the manufacturer, including those used for the servicing or repair of the product manufactured or marketed by the manufacturer. In any case, no warranty is given or attributed on the product manufactured or marketed by the manufacturer in case of damages caused by parts and/or components not approved by the manufacturer.

The manufacturer reserves the right to make improvements in design and changes in specifications at any time without notice and without incurring any obligation to install them on units previously sold. Specifications, descriptions, and illustrative material herein are as accurate as known at time of publication but are subject to change without notice.

In case of questions, refer to your CASE CONSTRUCTION Sales and Service Networks.

Find manuals at https://best-manuals.com

Safety rules

1150M	NA

Personal safety

This is the safety alert symbol. It is used to alert you to potential personal injury hazards. Obey all safety messages that follow this symbol to avoid possible death or injury.

Throughout this manual you will find the signal words DANGER, WARNING, and CAUTION followed by special instructions. These precautions are intended for the personal safety of you and those working with you.

Read and understand all the safety messages in this manual before you operate or service the machine.

DANGER indicates a hazardous situation that, if not avoided, will result in death or serious injury.

WARNING indicates a hazardous situation that, if not avoided, could result in death or serious injury.

CAUTION indicates a hazardous situation that, if not avoided, could result in minor or moderate injury.

FAILURE TO FOLLOW DANGER, WARNING, AND CAUTION MESSAGES COULD RESULT IN DEATH OR SERIOUS INJURY.

Machine safety

NOTICE: *Notice indicates a situation that, if not avoided, could result in machine or property damage.*

Throughout this manual you will find the signal word Notice followed by special instructions to prevent machine or property damage. The word Notice is used to address practices not related to personal safety.

Information

NOTE: *Note indicates additional information that clarifies steps, procedures, or other information in this manual.*

Throughout this manual you will find the word Note followed by additional information about a step, procedure, or other information in the manual. The word Note is not intended to address personal safety or property damage.

Safety rules - Personal safety

1150M	NA

⚠ General maintenance safety ⚠

Keep area used for servicing the machine clean and dry. Clean up spilled fluids.

Service machine on a firm level surface.

Install guards and shields after servicing the machine.

Close all access doors and install all panels after servicing the machine.

Do not attempt to clean, lubricate, clear obstructions or make adjustments to the machine while it is in motion or while the engine is running.

Always make sure working area is clear of tools, parts, other persons and pets before you start operating the machine.

Unsupported hydraulic cylinders can lose pressure and drop the equipment causing a crushing hazard. Do not leave equipment in a raised position while parked or during service, unless securely supported.

Jack or lift the machine only at jack or lift points indicated in this manual.

Incorrect towing procedures can cause accidents. When towing a disabled machine follow the procedure in this manual. Use only rigid tow bars.

Stop the engine, remove key and relieve pressure before disconnecting or connecting fluid lines.

Stop the engine and remove key before disconnecting or connecting electrical connections.

Scalding can result from incorrect removal of coolant caps. Cooling system operates under pressure. Hot coolant can spray out if a cap is removed while the system is hot. Allow system to cool before removing cap. When removing a cap turn it slowly to allow pressure to escape before completely removing the cap.

Replace damaged or worn tubes, hoses, electrical wiring, etc.

Engine, transmission, exhaust components, and hydraulic lines may become hot during operation. Take care when servicing such components. Allow surfaces to cool before handling or disconnecting hot components. Wear protective equipment when appropriate.

When welding, follow the instructions in the manual. Always disconnect the battery before welding on the machine. Always wash your hands after handling battery components.

⚠ General battery safety ⚠

Always wear eye protection when working with batteries.

Do not create sparks or have open flame near battery.

Ventilate when charging or using in an enclosed area.

Disconnect negative (-) first and reconnect negative (-) last.

When welding on the machine, disconnect both terminals of the battery.

Do not weld, grind, or smoke near a battery.

When using auxiliary batteries or connecting jumper cables to start the engine, use the procedure shown in the operator’s manual. Do not short across terminals.

Follow manufacturer’s instructions when storing and handling batteries.

Battery post, terminals, and related accessories contain lead and lead compounds. Wash hands after handling. This is a California Proposition 65 warning.

Battery acid causes burns. Batteries contain sulfuric acid. Avoid contact with skin, eyes, or clothing. Antidote (external): Flush with water. Antidote (eyes): flush with water for 15 minutes and seek medical attention immediately. Antidote (internal): Drink large quantities of water or milk. Do not induce vomiting. Seek medical attention immediately.

Keep out of reach of children and other unauthorized persons.

⚠ Air-conditioning system ⚠

The air-conditioning system is under high pressure. Do not disconnect any lines. The release of high pressure can cause serious injury.

The air-conditioning system contains gases that are harmful to the environment when released into the atmosphere. Do not attempt to service or repair the system.

Service, repair, or recharging must be performed only by a trained service technician.

⚠ Personal Protective Equipment (PPE) ⚠

Wear Personal Protective Equipment (PPE) such as hard hat, eye protection, heavy gloves, hearing protection, protective clothing, etc.

⚠ Do Not Operate tag ⚠

Before you start servicing the machine, attach a ‘Do Not Operate’ warning tag to the machine in an area that will be visible.

Safety rules - Ecology and the environment

1150M	NA

Soil, air, and water quality is important for all industries and life in general. When legislation does not yet rule the treatment of some of the substances that advanced technology requires, sound judgment should govern the use and disposal of products of a chemical and petrochemical nature.

Familiarize yourself with the relative legislation applicable to your country, and make sure that you understand this legislation. Where no legislation exists, obtain information from suppliers of oils, filters, batteries, fuels, anti-freeze, cleaning agents, etc., with regard to the effect of these substances on man and nature and how to safely store, use, and dispose of these substances.

Helpful hints

- Avoid the use of cans or other inappropriate pressurized fuel delivery systems to fill tanks. Such delivery systems may cause considerable spillage.
- In general, avoid skin contact with all fuels, oils, acids, solvents, etc. Most of these products contain substances that may be harmful to your health.
- Modern oils contain additives. Do not burn contaminated fuels and or waste oils in ordinary heating systems.
- Avoid spillage when you drain fluids such as used engine coolant mixtures, engine oil, hydraulic fluid, brake fluid, etc. Do not mix drained brake fluids or fuels with lubricants. Store all drained fluids safely until you can dispose of the fluids in a proper way that complies with all local legislation and available resources.
- Do not allow coolant mixtures to get into the soil. Collect and dispose of coolant mixtures properly.
- The air-conditioning system contains gases that should not be released into the atmosphere. Consult an air-conditioning specialist or use a special extractor to recharge the system properly.
- Repair any leaks or defects in the engine cooling system or hydraulic system immediately.
- Do not increase the pressure in a pressurized circuit as this may lead to a component failure.
- Protect hoses during welding. Penetrating weld splatter may burn a hole or weaken hoses, allowing the loss of oils, coolant, etc.

Battery recycling

Batteries and electric accumulators contain several substances that can have a harmful effect on the environment if the batteries are not properly recycled after use. Improper disposal of batteries can contaminate the soil, groundwater, and waterways. CASE CONSTRUCTION strongly recommends that you return all used batteries to a CASE CONSTRUCTION dealer, who will dispose of the used batteries or recycle the used batteries properly. In some countries, this is a legal requirement.

Mandatory battery recycling

NOTE: *The following requirements are mandatory in Brazil.*

Batteries are made of lead plates and a sulfuric acid solution. Because batteries contain heavy metals such as lead, CONAMA Resolution 401/2008 requires you to return all used batteries to the battery dealer when you replace any batteries. Do not dispose of batteries in your household garbage.

Points of sale are obliged to:

- Accept the return of your used batteries
- Store the returned batteries in a suitable location
- Send the returned batteries to the battery manufacturer for recycling

Safety rules - Do not operate tag

1150M	NA

⚠ WARNING

Maintenance hazard!
Before you start servicing the machine, attach a DO NOT OPERATE warning tag to the machine in a visible area.
Failure to comply could result in death or serious injury.

W0004A

Attach a DO NOT OPERATE (TAG) to the machine in an area that is clearly visible whenever the machine is not operating properly and/or requires service.
Complete the tag information for the "REASON" the tag is attached by describing the malfunction or service required.
Validate the reason for attaching the tag by signing your name in the designated area on the tag.
The tag should only be removed by the person who signed and attached the tag, after validating the repairs or services have been completed.

Tag Components

A. DO NOT REMOVE THIS TAG! - (Warning) The tag should only be removed by the person who signed and attached the tag, after validating the repairs or services have been completed.

B. See Other Side - (Reference to additional information on opposite side of the tag.)

C. CNH Part Number - (Request this part number from you Service Parts Dealer to obtain this DO NOT OPERATE tag.)

D. DO NOT OPERATE - (Warning!)

E. REASON - (Area for describing malfunction or service required before operation.)

F. Signed by - (Signature area - to be signed by the person validating the reason for installation of the tag.)

Torque - Minimum tightening torques for normal assembly

1150M	NA

METRIC NON-FLANGED HARDWARE

NOM. SIZE	CLASS 8.8 BOLT and CLASS 8 NUT		CLASS 10.9 BOLT and CLASS 10 NUT		LOCKNUT CL.8 W/CL8.8 BOLT	LOCKNUT CL.10 W/CL10.9 BOLT
	UNPLATED	PLATED W/ZnCr	UNPLATED	PLATED W/ZnCr		
M4	2.2 N·m (19 lb in)	2.9 N·m (26 lb in)	3.2 N·m (28 lb in)	4.2 N·m (37 lb in)	2 N·m (18 lb in)	2.9 N·m (26 lb in)
M5	4.5 N·m (40 lb in)	5.9 N·m (52 lb in)	6.4 N·m (57 lb in)	8.5 N·m (75 lb in)	4 N·m (36 lb in)	5.8 N·m (51 lb in)
M6	7.5 N·m (66 lb in)	10 N·m (89 lb in)	11 N·m (96 lb in)	15 N·m (128 lb in)	6.8 N·m (60 lb in)	10 N·m (89 lb in)
M8	18 N·m (163 lb in)	25 N·m (217 lb in)	26 N·m (234 lb in)	35 N·m (311 lb in)	17 N·m (151 lb in)	24 N·m (212 lb in)
M10	37 N·m (27 lb ft)	49 N·m (36 lb ft)	52 N·m (38 lb ft)	70 N·m (51 lb ft)	33 N·m (25 lb ft)	48 N·m (35 lb ft)
M12	64 N·m (47 lb ft)	85 N·m (63 lb ft)	91 N·m (67 lb ft)	121 N·m (90 lb ft)	58 N·m (43 lb ft)	83 N·m (61 lb ft)
M16	158 N·m (116 lb ft)	210 N·m (155 lb ft)	225 N·m (166 lb ft)	301 N·m (222 lb ft)	143 N·m (106 lb ft)	205 N·m (151 lb ft)
M20	319 N·m (235 lb ft)	425 N·m (313 lb ft)	440 N·m (325 lb ft)	587 N·m (433 lb ft)	290 N·m (214 lb ft)	400 N·m (295 lb ft)
M24	551 N·m (410 lb ft)	735 N·m (500 lb ft)	762 N·m (560 lb ft)	1016 N·m (750 lb ft)	501 N·m (370 lb ft)	693 N·m (510 lb ft)

NOTE: *M4 through M8 hardware torque specifications are shown in pound-inches. M10 through M24 hardware torque specifications are shown in pound-feet.*

METRIC FLANGED HARDWARE

NOM. SIZE	CLASS 8.8 BOLT and CLASS 8 NUT		CLASS 10.9 BOLT and CLASS 10 NUT		LOCKNUT CL.8 W/CL8.8 BOLT	LOCKNUT CL.10 W/CL10.9 BOLT
	UNPLATED	PLATED W/ZnCr	UNPLATED	PLATED W/ZnCr		
M4	2.4 N·m (21 lb in)	3.2 N·m (28 lb in)	3.5 N·m (31 lb in)	4.6 N·m (41 lb in)	2.2 N·m (19 lb in)	3.1 N·m (27 lb in)
M5	4.9 N·m (43 lb in)	6.5 N·m (58 lb in)	7.0 N·m (62 lb in)	9.4 N·m (83 lb in)	4.4 N·m (39 lb in)	6.4 N·m (57 lb in)
M6	8.3 N·m (73 lb in)	11 N·m (96 lb in)	12 N·m (105 lb in)	16 N·m (141 lb in)	7.5 N·m (66 lb in)	11 N·m (96 lb in)
M8	20 N·m (179 lb in)	27 N·m (240 lb in)	29 N·m (257 lb in)	39 N·m (343 lb in)	18 N·m (163 lb in)	27 N·m (240 lb in)
M10	40 N·m (30 lb ft)	54 N·m (40 lb ft)	57 N·m (42 lb ft)	77 N·m (56 lb ft)	37 N·m (27 lb ft)	53 N·m (39 lb ft)
M12	70 N·m (52 lb ft)	93 N·m (69 lb ft)	100 N·m (74 lb ft)	134 N·m (98 lb ft)	63 N·m (47 lb ft)	91 N·m (67 lb ft)
M16	174 N·m (128 lb ft)	231 N·m (171 lb ft)	248 N·m (183 lb ft)	331 N·m (244 lb ft)	158 N·m (116 lb ft)	226 N·m (167 lb ft)
M20	350 N·m (259 lb ft)	467 N·m (345 lb ft)	484 N·m (357 lb ft)	645 N·m (476 lb ft)	318 N·m (235 lb ft)	440 N·m (325 lb ft)
M24	607 N·m (447 lb ft)	809 N·m (597 lb ft)	838 N·m (618 lb ft)	1118 N·m (824 lb ft)	552 N·m (407 lb ft)	

IDENTIFICATION

Metric Hex head and carriage bolts, classes 5.6 and up

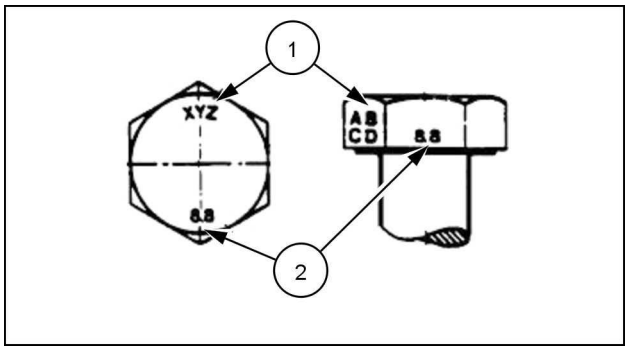

20083680 1

1. Manufacturer's Identification
2. Property Class

Metric Hex nuts and locknuts, classes 05 and up

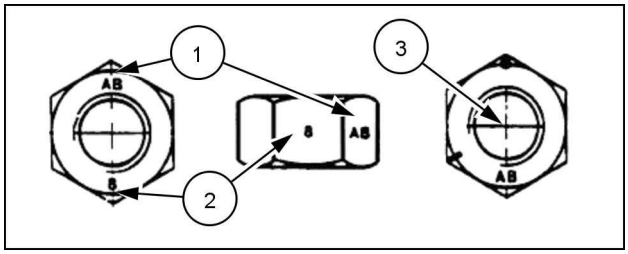

20083681 2

1. Manufacturer's Identification
2. Property Class
3. Clock Marking of Property Class and Manufacturer's Identification (Optional), i.e. marks **60°** apart indicate Class 10 properties, and marks **120°** apart indicate Class 8.

INCH NON-FLANGED HARDWARE

NOMINAL SIZE	SAE GRADE 5 BOLT and NUT		SAE GRADE 8 BOLT and NUT		LOCKNUT GrB W/ Gr5 BOLT	LOCKNUT GrC W/ Gr8 BOLT
	UN-PLATED or PLATED SILVER	PLATED W/ZnCr GOLD	UN-PLATED or PLATED SILVER	PLATED W/ZnCr GOLD		
1/4	**8 N·m (71 lb in)**	**11 N·m (97 lb in)**	**12 N·m (106 lb in)**	**16 N·m (142 lb in)**	**8.5 N·m (75 lb in)**	**12.2 N·m (109 lb in)**
5/16	**17 N·m (150 lb in)**	**23 N·m (204 lb in)**	**24 N·m (212 lb in)**	**32 N·m (283 lb in)**	**17.5 N·m (155 lb in)**	**25 N·m (220 lb in)**
3/8	**30 N·m (22 lb ft)**	**40 N·m (30 lb ft)**	**43 N·m (31 lb ft)**	**57 N·m (42 lb ft)**	**31 N·m (23 lb ft)**	**44 N·m (33 lb ft)**
7/16	**48 N·m (36 lb ft)**	**65 N·m (48 lb ft)**	**68 N·m (50 lb ft)**	**91 N·m (67 lb ft)**	**50 N·m (37 lb ft)**	**71 N·m (53 lb ft)**
1/2	**74 N·m (54 lb ft)**	**98 N·m (73 lb ft)**	**104 N·m (77 lb ft)**	**139 N·m (103 lb ft)**	**76 N·m (56 lb ft)**	**108 N·m (80 lb ft)**
9/16	**107 N·m (79 lb ft)**	**142 N·m (105 lb ft)**	**150 N·m (111 lb ft)**	**201 N·m (148 lb ft)**	**111 N·m (82 lb ft)**	**156 N·m (115 lb ft)**
5/8	**147 N·m (108 lb ft)**	**196 N·m (145 lb ft)**	**208 N·m (153 lb ft)**	**277 N·m (204 lb ft)**	**153 N·m (113 lb ft)**	**215 N·m (159 lb ft)**
3/4	**261 N·m (193 lb ft)**	**348 N·m (257 lb ft)**	**369 N·m (272 lb ft)**	**491 N·m (362 lb ft)**	**271 N·m (200 lb ft)**	**383 N·m (282 lb ft)**
7/8	**420 N·m (310 lb ft)**	**561 N·m (413 lb ft)**	**594 N·m (438 lb ft)**	**791 N·m (584 lb ft)**	**437 N·m (323 lb ft)**	**617 N·m (455 lb ft)**
1	**630 N·m (465 lb ft)**	**841 N·m (620 lb ft)**	**890 N·m (656 lb ft)**	**1187 N·m (875 lb ft)**	**654 N·m (483 lb ft)**	**924 N·m (681 lb ft)**

NOTE: *For Imperial Units,* ***1/4 in*** *and* ***5/16 in*** *hardware torque specifications are shown in pound-inches.* ***3/8 in*** *through* ***1 in*** *hardware torque specifications are shown in pound-feet.*

INCH FLANGED HARDWARE

NOM-INAL SIZE	SAE GRADE 5 BOLT and NUT		SAE GRADE 8 BOLT and NUT		LOCKNUT GrF W/ Gr5 BOLT	LOCKNUT GrG W/ Gr8 BOLT
	UNPLATED or PLATED SILVER	PLATED W/ZnCr GOLD	UNPLATED or PLATED SILVER	PLATED W/ZnCr GOLD		
1/4	9 N·m (80 lb in)	12 N·m (106 lb in)	13 N·m (115 lb in)	17 N·m (150 lb in)	8 N·m (71 lb in)	12 N·m (106 lb in)
5/16	19 N·m (168 lb in)	25 N·m (221 lb in)	26 N·m (230 lb in)	35 N·m (310 lb in)	17 N·m (150 lb in)	24 N·m (212 lb in)
3/8	33 N·m (25 lb ft)	44 N·m (33 lb ft)	47 N·m (35 lb ft)	63 N·m (46 lb ft)	30 N·m (22 lb ft)	43 N·m (32 lb ft)
7/16	53 N·m (39 lb ft)	71 N·m (52 lb ft)	75 N·m (55 lb ft)	100 N·m (74 lb ft)	48 N·m (35 lb ft)	68 N·m (50 lb ft)
1/2	81 N·m (60 lb ft)	108 N·m (80 lb ft)	115 N·m (85 lb ft)	153 N·m (113 lb ft)	74 N·m (55 lb ft)	104 N·m (77 lb ft)
9/16	117 N·m (86 lb ft)	156 N·m (115 lb ft)	165 N·m (122 lb ft)	221 N·m (163 lb ft)	106 N·m (78 lb ft)	157 N·m (116 lb ft)
5/8	162 N·m (119 lb ft)	216 N·m (159 lb ft)	228 N·m (168 lb ft)	304 N·m (225 lb ft)	147 N·m (108 lb ft)	207 N·m (153 lb ft)
3/4	287 N·m (212 lb ft)	383 N·m (282 lb ft)	405 N·m (299 lb ft)	541 N·m (399 lb ft)	261 N·m (193 lb ft)	369 N·m (272 lb ft)
7/8	462 N·m (341 lb ft)	617 N·m (455 lb ft)	653 N·m (482 lb ft)	871 N·m (642 lb ft)	421 N·m (311 lb ft)	594 N·m (438 lb ft)
1	693 N·m (512 lb ft)	925 N·m (682 lb ft)	979 N·m (722 lb ft)	1305 N·m (963 lb ft)	631 N·m (465 lb ft)	890 N·m (656 lb ft)

IDENTIFICATION

Inch Bolts and free-spinning nuts

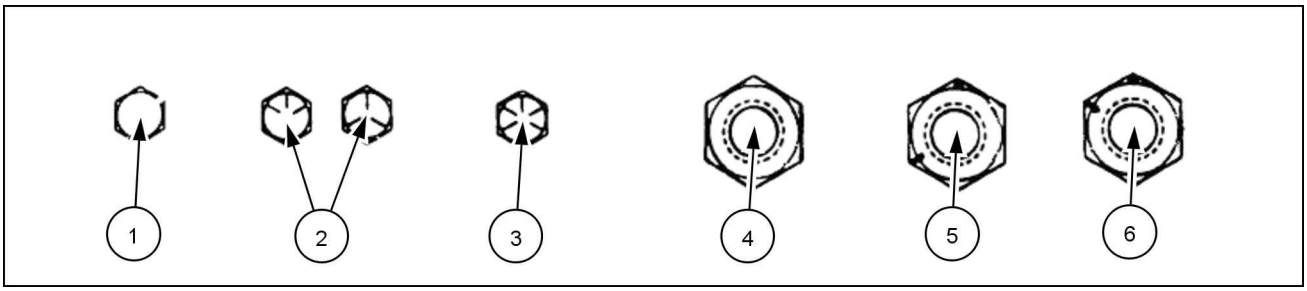

20083682 3

Grade Marking Examples

SAE Grade Identification			
1	Grade 2 - No Marks	4	Grade 2 Nut - No Marks
2	Grade 5 - Three Marks	5	Grade 5 Nut - Marks **120°** Apart
3	Grade 8 - Five Marks	6	Grade 8 Nut - Marks **60°** Apart

Inch Lock Nuts, All Metal (Three optional methods)

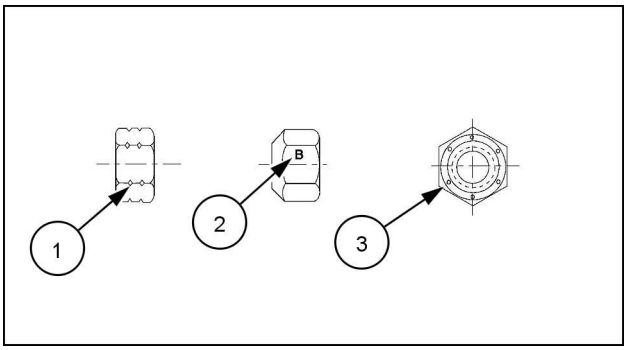

20090268 4

Grade Identification

Grade	Corner Marking Method (1)	Flats Marking Method (2)	Clock Marking Method (3)
Grade A	No Notches	No Mark	No Marks
Grade B	One Circumferential Notch	Letter B	Three Marks
Grade C	Two Circumferential Notches	Letter C	Six Marks

Torque - Standard torque data for hydraulics

1150M	NA

NOTICE: *Hydraulic connections require a minimum assembly torque in order to provide zero leakage at rated pressure with adequate fatigue resistance. Too much torque on a hydraulic connection can lead to leakage or failure.*

NOTICE: *There are several different kinds of parallel thread ports, including those using metric threads, inch threads, and British Standard Pipe Parallel (BSPP) threads. None of these port systems are interchangeable, and using the wrong connector in a port will not provide an adequate seal, even if it is possible to install the part.*

NOTE: *Hand install and hand tighten all connections before using tools to set the torque. This will reduce the possibility of thread damage.*

Torques for Metric O-Ring Boss (ORB) stud ends and port connections

Metric Thread	S-Series (Heavy Duty)		L-Series (Light Duty)	
	Ferrous	Non-Ferrous	Ferrous	Non-Ferrous
M8x1	**10.5 N·m (7.7 lb ft)**	**6.3 N·m (4.6 lb ft)**	**8.5 N·m (6.3 lb ft)**	**5 N·m (3.7 lb ft)**
M10x1	**21 N·m (15.5 lb ft)**	**12.5 N·m (9.2 lb ft)**	**15.5 N·m (11.4 lb ft)**	**9.3 N·m (6.9 lb ft)**
M12x1.5	**37 N·m (27.3 lb ft)**	**22 N·m (16.2 lb ft)**	**27 N·m (19.9 lb ft)**	**16 N·m (11.8 lb ft)**
M14x1.5	**47 N·m (34.7 lb ft)**	**28 N·m (20.7 lb ft)**	**37 N·m (27.3 lb ft)**	**22 N·m (16.2 lb ft)**
M16x1.5	**58 N·m (42.8 lb ft)**	**35 N·m (25.8 lb ft)**	**42 N·m (31.0 lb ft)**	**25 N·m (18.4 lb ft)**
M18x1.5	**74 N·m (54.6 lb ft)**	**44 N·m (32.5 lb ft)**	**47 N·m (34.7 lb ft)**	**28 N·m (20.7 lb ft)**
M22x1.5	**105 N·m (77.4 lb ft)**	**63 N·m (46.5 lb ft)**	**63 N·m (46.5 lb ft)**	**38 N·m (28.0 lb ft)**
M27x2	**178 N·m (131.3 lb ft)**	**107 N·m (78.9 lb ft)**	**105 N·m (77.4 lb ft)**	**63 N·m (46.5 lb ft)**
M30x2	**225 N·m (166.0 lb ft)**	**135 N·m (99.6 lb ft)**	**136 N·m (100.3 lb ft)**	**82 N·m (60.5 lb ft)**
M33x2	**325 N·m (239.7 lb ft)**	**195 N·m (143.8 lb ft)**	**168 N·m (123.9 lb ft)**	**101 N·m (74.5 lb ft)**
M42x2	**345 N·m (254.5 lb ft)**	**207 N·m (152.7 lb ft)**	**220 N·m (162.3 lb ft)**	**132 N·m (97.4 lb ft)**
M48x2	**440 N·m (324.5 lb ft)**	**264 N·m (194.7 lb ft)**	**273 N·m (201.4 lb ft)**	**164 N·m (121.0 lb ft)**
M60x2	**525 N·m (387.2 lb ft)**	**315 N·m (232.3 lb ft)**	**330 N·m (243.4 lb ft)**	**198 N·m (146.0 lb ft)**
NOTE: *Final torque tolerance +/– **10%** of the given torque specification.*				

Torques for Metric O-Ring Boss (ORB) port plugs

Metric Thread	Ferrous		Non-Ferrous
	Internal Hex	External Hex	
M8x1	**8.5 N·m (6.3 lb ft)**	**10.5 N·m (7.7 lb ft)**	**6.3 N·m (4.6 lb ft)**
M10x1	**16 N·m (11.8 lb ft)**	**21 N·m (15.5 lb ft)**	**12.5 N·m (9.2 lb ft)**
M12x1.5	**23 N·m (17.0 lb ft)**	**37 N·m (27.3 lb ft)**	**22 N·m (16.2 lb ft)**
M14x1.5	**47 N·m (34.7 lb ft)**		**28 N·m (20.7 lb ft)**
M16x1.5	**58 N·m (42.8 lb ft)**		**35 N·m (25.8 lb ft)**
M18x1.5	**74 N·m (54.6 lb ft)**		**44 N·m (32.5 lb ft)**
M22x1.5	**105 N·m (77.4 lb ft)**		**63 N·m (46.5 lb ft)**
M27x2	**178 N·m (131.3 lb ft)**		**107 N·m (78.9 lb ft)**
M30x2	**225 N·m (166.0 lb ft)**		**135 N·m (99.6 lb ft)**
M33x2	**325 N·m (239.7 lb ft)**		**195 N·m (143.8 lb ft)**
M42x2	**345 N·m (254.5 lb ft)**		**207 N·m (152.7 lb ft)**
M48x2	**440 N·m (324.5 lb ft)**		**264 N·m (194.7 lb ft)**
M60x2	**525 N·m (387.2 lb ft)**		**315 N·m (232.3 lb ft)**
NOTE: *Final torque tolerance +/– **10%** of the given torque specification.*			

Torques for British Standard Pipe Parallel (BSPP) straight-pipe-thread port connections

BSPP Thread	Metric Tube OD		Ferrous		Non-Ferrous	
	S-Series (Heavy Duty)	L-Series (Light Duty)	S-Series (Heavy Duty)	L-Series (Light Duty)	S-Series (Heavy Duty)	L-Series (Light Duty)
G 1/8 A	—	6 mm	—	21 N·m (15.5 lb ft)	—	12.5 N·m (9.2 lb ft)
G 1/4 A	6 mm 8 mm	8 mm 10 mm	63 N·m (46.5 lb ft)	53 N·m (39.1 lb ft)	38 N·m (28.0 lb ft)	32 N·m (23.6 lb ft)
G 3/8 A	10 mm 12 mm	12 mm	95 N·m (70.1 lb ft)	84 N·m (62.0 lb ft)	57 N·m (42.0 lb ft)	50 N·m (36.9 lb ft)
G 1/2 A	16 mm	15 mm 18 mm	136 N·m (100.3 lb ft)	105 N·m (77.4 lb ft)	82 N·m (60.5 lb ft)	63 N·m (46.5 lb ft)
G 3/4 A	20 mm	22 mm	210 N·m (154.9 lb ft)	210 N·m (154.9 lb ft)	126 N·m (92.9 lb ft)	126 N·m (92.9 lb ft)
G 1 A	25 mm	28 mm	400 N·m (295.0 lb ft)	400 N·m (295.0 lb ft)	240 N·m (177.0 lb ft)	240 N·m (177.0 lb ft)
G 1-1/4 A	30 mm	35 mm	525 N·m (387.2 lb ft)	525 N·m (387.2 lb ft)	315 N·m (232.3 lb ft)	315 N·m (232.3 lb ft)
G 1-1/2 A	38 mm	42 mm	660 N·m (486.8 lb ft)	660 N·m (486.8 lb ft)	396 N·m (292.1 lb ft)	396 N·m (292.1 lb ft)

NOTE: *Final torque tolerance is +/– **10%** of the given torque specification.*

Torques for Metric O-Ring Face Seal (ORFS) ports and stud end connections

BSP Thread	Metric Tube OD		Ferrous		Non-Ferrous	
	S-Series (Heavy Duty)	L-Series (Light Duty)	S-Series (Heavy Duty)	L-Series (Light Duty)	S-Series (Heavy Duty)	L-Series (Light Duty)
M10x1	—	**4 mm**	—	**21 N·m (15.5 lb ft)**	—	**12.5 N·m (9.2 lb ft)**
M12x1.5	**4 mm**	**6 mm**	**47 N·m (34.7 lb ft)**	**32 N·m (23.6 lb ft)**	**28 N·m (20.7 lb ft)**	**19 N·m (14.0 lb ft)**
M14x1.5	**5 mm**	**7 mm**	**63 N·m (46.5 lb ft)**	**53 N·m (39.1 lb ft)**	**38 N·m (28.0 lb ft)**	**32 N·m (23.6 lb ft)**
M16x1.5	**7 mm**	**9 mm**	**84 N·m (62.0 lb ft)**	**63 N·m (46.5 lb ft)**	**50 N·m (36.9 lb ft)**	**38 N·m (28.0 lb ft)**
M18x1.5	**8 mm**	**11 mm**	**105 N·m (77.4 lb ft)**	**84 N·m (62.0 lb ft)**	**63 N·m (46.5 lb ft)**	**50 N·m (36.9 lb ft)**
M20x1.5	**10 mm**	—	**147 N·m (108.4 lb ft)**	—	**88 N·m (64.9 lb ft)**	—
M22x1.5	**12 mm**	**14 mm**	**158 N·m (116.5 lb ft)**	**147 N·m (108.4 lb ft)**	**95 N·m (70.1 lb ft)**	**88 N·m (64.9 lb ft)**
M26x1.5	—	**18 mm**	—	**210 N·m (154.9 lb ft)**	—	**126 N·m (92.9 lb ft)**
M27x1.2	**16 mm**	—	**210 N·m (154.9 lb ft)**	—	**126 N·m (92.9 lb ft)**	—
M33x2	**20 mm**	**23 mm**	**400 N·m (295.0 lb ft)**	**400 N·m (295.0 lb ft)**	**240 N·m (177.0 lb ft)**	**240 N·m (177.0 lb ft)**
M42x2	**25 mm**	**30 mm**	**525 N·m (387.2 lb ft)**	**525 N·m (387.2 lb ft)**	**315 N·m (232.3 lb ft)**	**315 N·m (232.3 lb ft)**
M48x2	**32 mm**	**36 mm**	**630 N·m (464.7 lb ft)**	**630 N·m (464.7 lb ft)**	**396 N·m (292.1 lb ft)**	**396 N·m (292.1 lb ft)**
NOTE: *Final torque tolerance +/–* ***10%*** *of the given torque specification.*						

Torques for Inch O-Ring Boss (ORB) non-adjustable port and stud end connections

SAE Dash size	UN/UNF Thread size	Inch Tube OD	S-Series (Heavy Duty)		L-Series (Light Duty)	
			Ferrous	Non-Ferrous	Ferrous	Non-Ferrous
2	5/16–24	**3.18 mm** (**0.125 in**) 1/8	—	—	**8.5 N·m** (**6.3 lb ft**)	**5 N·m** (**3.7 lb ft**)
3	3/8–24	**4.76 mm** (**0.187 in**) 3/16	**15.5 N·m** (**11.4 lb ft**)	**9.3 N·m** (**6.9 lb ft**)	**10.5 N·m** (**7.7 lb ft**)	**6.3 N·m** (**4.6 lb ft**)
4	7/16–20	**6.35 mm** (**0.25 in**) 1/4	**37 N·m** (**27.3 lb ft**)	**22 N·m** (**16.2 lb ft**)	**19 N·m** (**14.0 lb ft**)	**11.5 N·m** (**8.5 lb ft**)
5	1/2–20	**7.94 mm** (**0.313 in**) 5/16	**42 N·m** (**31.0 lb ft**)	**25 N·m** (**18.4 lb ft**)	**26 N·m** (**19.2 lb ft**)	**15.5 N·m** (**11.4 lb ft**)
6	9/16–18	**9.52 mm** (**0.375 in**) 3/8	**47 N·m** (**34.7 lb ft**)	**28 N·m** (**20.7 lb ft**)	**32 N·m** (**23.6 lb ft**)	**19 N·m** (**14.0 lb ft**)
8	3/4–16	**12.7 mm** (**0.5 in**) 1/2	**89 N·m** (**65.6 lb ft**)	**53 N·m** (**39.1 lb ft**)	**53 N·m** (**39.1 lb ft**)	**32 N·m** (**23.6 lb ft**)
10	7/8–14	**15.88 mm** (**0.625 in**) 5/8	**121 N·m** (**89.2 lb ft**)	**73 N·m** (**53.8 lb ft**)	**63 N·m** (**46.5 lb ft**)	**38 N·m** (**28.0 lb ft**)
12	1-1/16–12	**19.05 mm** (**0.75 in**) 3/4	**178 N·m** (**131.3 lb ft**)	**107 N·m** (**78.9 lb ft**)	**100 N·m** (**73.8 lb ft**)	**60 N·m** (**44.3 lb ft**)
14	1-3/16–12	**22.22 mm** (**0.875 in**) 7/8	**225 N·m** (**166.0 lb ft**)	**135 N·m** (**99.6 lb ft**)	**131 N·m** (**96.6 lb ft**)	**79 N·m** (**58.3 lb ft**)
16	1-5/16–12	**25.4 mm** (**1.0 in**) 1	**283 N·m** (**208.7 lb ft**)	**170 N·m** (**125.4 lb ft**)	**156 N·m** (**115.1 lb ft**)	**94 N·m** (**69.3 lb ft**)
20	1-5/8–12	**31.75 mm** (**1.25 in**) 1-1/4	**300 N·m** (**221.3 lb ft**)	**180 N·m** (**132.8 lb ft**)	**210 N·m** (**154.9 lb ft**)	**126 N·m** (**92.9 lb ft**)
24	1-7/8–12	**38.1 mm** (**1.5 in**) 1-1/2	**388 N·m** (**286.2 lb ft**)	**233 N·m** (**171.9 lb ft**)	**220 N·m** (**162.3 lb ft**)	**132 N·m** (**97.4 lb ft**)
32	2-1/2–12	**50.8 mm** (**2.0 in**) 2	**388 N·m** (**286.2 lb ft**)	**233 N·m** (**171.9 lb ft**)	**315 N·m** (**232.3 lb ft**)	**189 N·m** (**139.4 lb ft**)
NOTE: *Final torque tolerance +/–* ***10%*** *of the given torque specification.*						

Torques for Inch O-Ring Boss (ORB) adjustable stud end and port connections

SAE Dash size	UN/UNF Thread size	Inch Tube OD	S-Series (Heavy Duty)		L-Series (Light Duty)	
			Ferrous	Non-Ferrous	Ferrous	Non-Ferrous
2	5/16–24	**3.18 mm** (**0.125 in**) 1/8	—	—	**8.5 N·m** (**6.3 lb ft**)	**5 N·m** (**3.7 lb ft**)
3	3/8–24	**4.76 mm** (**0.187 in**) 3/16	**10.5 N·m** (**7.7 lb ft**)	**9.3 N·m** (**6.9 lb ft**)	**10.5 N·m** (**7.7 lb ft**)	**6.3 N·m** (**4.6 lb ft**)
4	7/16–20	**6.35 mm** (**0.25 in**) 1/4	**21 N·m** (**15.5 lb ft**)	**21 N·m** (**15.5 lb ft**)	**19 N·m** (**14.0 lb ft**)	**11.5 N·m** (**8.5 lb ft**)
5	1/2–20	**7.94 mm** (**0.313 in**) 5/16	**42 N·m** (**31.0 lb ft**)	**25 N·m** (**18.4 lb ft**)	**26 N·m** (**19.2 lb ft**)	**15.5 N·m** (**11.4 lb ft**)
6	9/16–18	**9.52 mm** (**0.375 in**) 3/8	**47 N·m** (**34.7 lb ft**)	**28 N·m** (**20.7 lb ft**)	**32 N·m** (**23.6 lb ft**)	**19 N·m** (**14.0 lb ft**)
8	3/4–16	**12.7 mm** (**0.5 in**) 1/2	**89 N·m** (**65.6 lb ft**)	**53 N·m** (**39.1 lb ft**)	**53 N·m** (**39.1 lb ft**)	**32 N·m** (**23.6 lb ft**)
10	7/8–14	**15.88 mm** (**0.625 in**) 5/8	**121 N·m** (**89.2 lb ft**)	**73 N·m** (**53.8 lb ft**)	**63 N·m** (**46.5 lb ft**)	**38 N·m** (**28.0 lb ft**)
12	1-1/16–12	**19.05 mm** (**0.75 in**) 3/4	**178 N·m** (**131.3 lb ft**)	**107 N·m** (**78.9 lb ft**)	**100 N·m** (**73.8 lb ft**)	**60 N·m** (**44.3 lb ft**)
14	1-3/16–12	**22.22 mm** (**0.875 in**) 7/8	**225 N·m** (**166.0 lb ft**)	**135 N·m** (**99.6 lb ft**)	**131 N·m** (**96.6 lb ft**)	**79 N·m** (**58.3 lb ft**)
16	1-5/16–12	**25.4 mm** (**1.0 in**) 1	**285 N·m** (**210.2 lb ft**)	**170 N·m** (**125.4 lb ft**)	**156 N·m** (**115.1 lb ft**)	**94 N·m** (**69.3 lb ft**)
20	1-5/8–12	**31.75 mm** (**1.25 in**) 1-1/4	**300 N·m** (**221.3 lb ft**)	**180 N·m** (**132.8 lb ft**)	**210 N·m** (**154.9 lb ft**)	**126 N·m** (**92.9 lb ft**)
24	1-7/8–12	**38.1 mm** (**1.5 in**) 1-1/2	**388 N·m** (**286.2 lb ft**)	**233 N·m** (**171.9 lb ft**)	**220 N·m** (**162.3 lb ft**)	**132 N·m** (**97.4 lb ft**)
32	2-1/2–12	**50.8 mm** (**2.0 in**) 2	**388 N·m** (**286.2 lb ft**)	**233 N·m** (**171.9 lb ft**)	**315 N·m** (**232.3 lb ft**)	**189 N·m** (**139.4 lb ft**)
NOTE: *Final torque tolerance +/–* ***10%*** *of the given torque specification.*						

Torques for Inch O-Ring Boss (ORB) port plug

SAE Dash size	UN/UNF Thread size	Ferrous		Non-Ferrous
		Internal Hex	External Hex	
2	5/16–24	**7.5 N·m (5.5 lb ft)**	**12.5 N·m (9.2 lb ft)**	**7.5 N·m (5.5 lb ft)**
3	3/8–24	**14.5 N·m (10.7 lb ft)**	**21 N·m (15.5 lb ft)**	**12.5 N·m (9.2 lb ft)**
4	7/16–20	**21 N·m (15.5 lb ft)**	**37 N·m (27.3 lb ft)**	**22 N·m (16.2 lb ft)**
5	1/2–20	**28 N·m (20.7 lb ft)**	**42 N·m (31.0 lb ft)**	**25 N·m (18.4 lb ft)**
6	9/16–18	**47 N·m (34.7 lb ft)**	**47 N·m (34.7 lb ft)**	**28 N·m (20.7 lb ft)**
8	3/4–16	**89 N·m (65.6 lb ft)**	**89 N·m (65.6 lb ft)**	**53 N·m (39.1 lb ft)**
10	7/8–14	**116 N·m (85.6 lb ft)**	**116 N·m (85.6 lb ft)**	**70 N·m (51.6 lb ft)**
12	1-1/16–12	**176 N·m (129.8 lb ft)**	**176 N·m (129.8 lb ft)**	**106 N·m (78.2 lb ft)**
14	1-3/16–12	**247 N·m (182.2 lb ft)**	**247 N·m (182.2 lb ft)**	**148 N·m (109.2 lb ft)**
16	1-5/16–12	**284 N·m (209.5 lb ft)**	**284 N·m (209.5 lb ft)**	**170 N·m (125.4 lb ft)**
20	1-5/8–12	**357 N·m (263.3 lb ft)**	**357 N·m (263.3 lb ft)**	**214 N·m (157.8 lb ft)**
24	1-7/8–12	**441 N·m (325.3 lb ft)**	**441 N·m (325.3 lb ft)**	**265 N·m (195.5 lb ft)**
32	2-1/2–12	**536 N·m (395.3 lb ft)**	**536 N·m (395.3 lb ft)**	**322 N·m (237.5 lb ft)**
NOTE: *Final torque tolerance +/–* ***10%*** *of the given torque specification.*				

Torques for O-Ring Face Seal (ORFS) hose connectors

SAE Dash size	UN/UNF Thread size	Tube OD	High/Medium pressure applications (greater than 50 bar (725 psi)	Low pressure applications (less than 50 bar (725 psi)
			Swivel nut torque	
4	9/16–18	**6.35 mm** (**0.25 in**) 1/4	**27 N·m** (**19.9 lb ft**)	**27 N·m** (**19.9 lb ft**)
5	5/8–18	**7.94 mm** (**0.313 in**) 5/16	**34 N·m** (**25.1 lb ft**)	**34 N·m** (**25.1 lb ft**)
6	11/16–16	**9.52 mm** (**0.375 in**) 3/8	**44 N·m** (**32.5 lb ft**)	**44 N·m** (**32.5 lb ft**)
8	13/16–16	**12.7 mm** (**0.5 in**) 1/2	**65 N·m** (**47.9 lb ft**)	**65 N·m** (**47.9 lb ft**)
10	1–14	**15.88 mm** (**0.625 in**) 5/8	**100 N·m** (**73.8 lb ft**)	**100 N·m** (**73.8 lb ft**)
12	1-3/16–12	**19.05 mm** (**0.75 in**) 3/4	**150 N·m** (**110.6 lb ft**)	**131 N·m** (**96.6 lb ft**)
14	1-5/16–12	**22.22 mm** (**0.875 in**) 7/8	**163 N·m** (**120.2 lb ft**)	**131 N·m** (**96.6 lb ft**)
16	1-7/16–12	**25.4 mm** (**1.0 in**) 1	**210 N·m** (**154.9 lb ft**)	**131 N·m** (**96.6 lb ft**)
20	1-11/16–12	**31.75 mm** (**1.25 in**) 1-1/4	**280 N·m** (**206.5 lb ft**)	**178 N·m** (**131.3 lb ft**)
24	2–12	**38.1 mm** (**1.5 in**) 1-1/2	**375 N·m** (**276.6 lb ft**)	**210 N·m** (**154.9 lb ft**)
NOTE: *Final torque tolerance +/–* ***10%*** *of the given torque specification.*				

Torques for four-bolt flange connections (Metric class 10.9)

Bolt Length	Bolt (SAE Code 61)	Torque (SAE Code 61)	Bolt (SAE Code 62)	Torque (SAE Code 62)
13 mm (0.5 in)	M8x1.25	**34 N·m (25.1 lb ft)**	M8x1.25	**34 N·m (25.1 lb ft)**
19 mm (0.75 in)	M10x1.5	**74 N·m (54.6 lb ft)**	M10x1.5	**74 N·m (54.6 lb ft)**
25 mm (1.0 in)	M10x1.5	**74 N·m (54.6 lb ft)**	M12x1.75	**137 N·m (101.0 lb ft)**
32 mm (1.25 in)	M10x1.5	**74 N·m (54.6 lb ft)**	M12x1.75	**137 N·m (101.0 lb ft)**
			M14x1.5	**189 N·m (139.4 lb ft)**
38 mm (1.5 in)	M12x1.75	**137 N·m (101.0 lb ft)**	M16x2	**310 N·m (228.6 lb ft)**
51 mm (2.0 in)	M12x1.75	**137 N·m (101.0 lb ft)**	M20x2.5	**575 N·m (424.1 lb ft)**
64 mm (2.5 in)	M12x1.75	**137 N·m (101.0 lb ft)**	M24x3	**575 N·m (424.1 lb ft)**
76 mm (3.0 in)	M16x2	**310 N·m (228.6 lb ft)**	M30x3.5	**680 N·m (501.5 lb ft)**
89 mm (3.5 in)	M16x2	**310 N·m (228.6 lb ft)**	—	—
102 mm (4.0 in)	M16x2	**310 N·m (228.6 lb ft)**	—	—
127 mm (5.0 in)	M16x2	**310 N·m (228.6 lb ft)**	—	—
NOTE: *Final torque tolerance +/– **10%** of the given torque specification.*				

Torques for four-bolt flange connections (Metric class 8.8)

Bolt Length	Bolt (SAE Code 61)	Torque (SAE Code 61)	Bolt (SAE Code 62)	Torque (SAE Code 62)
13 mm (0.5 in)	M8x1.25	**29 N·m (21.4 lb ft)**	M8x1.25	**29 N·m (21.4 lb ft)**
19 mm (0.75 in)	M10x1.5	**57 N·m (42.0 lb ft)**	M10x1.5	**57 N·m (42.0 lb ft)**
25 mm (1.0 in)	M10x1.5	**57 N·m (42.0 lb ft)**	M12x1.75	**100 N·m (73.8 lb ft)**
32 mm (1.25 in)	M10x1.5	**57 N·m (42.0 lb ft)**	M12x1.75	**100 N·m (73.8 lb ft)**
			M14x1.5	**160 N·m (118.0 lb ft)**
38 mm (1.5 in)	M12x1.75	**100 N·m (73.8 lb ft)**	M16x2	**250 N·m (184.4 lb ft)**
51 mm (2.0 in)	M12x1.75	**100 N·m (73.8 lb ft)**	M20x2.5	**500 N·m (368.8 lb ft)**
64 mm (2.5 in)	M12x1.75	**100 N·m (73.8 lb ft)**	M24x3	**575 N·m (424.1 lb ft)**
76 mm (3.0 in)	M16x2	**250 N·m (184.4 lb ft)**	M30x3.5	**680 N·m (501.5 lb ft)**
89 mm (3.5 in)	M16x2	**250 N·m (184.4 lb ft)**	—	—
102 mm (4.0 in)	M16x2	**250 N·m (184.4 lb ft)**	—	—
127 mm (5.0 in)	M16x2	**250 N·m (184.4 lb ft)**	—	—
NOTE: *Final torque tolerance +/– **10%** of the given torque specification.*				

Torques for four-bolt flange connections (Inch grade 8)

Bolt Length	Bolt (SAE Code 61)	Torque (SAE Code 61)	Bolt (SAE Code 62)	Torque (SAE Code 62)
13 mm (0.5 in)	5/16–18	**34 N·m (25.1 lb ft)**	5/16–18	**34 N·m (25.1 lb ft)**
19 mm (0.75 in)	3/8-16	**63 N·m (46.5 lb ft)**	3/8-16	**63 N·m (46.5 lb ft)**
25 mm (1.0 in)	3/8-16	**63 N·m (46.5 lb ft)**	7/16-14	**97 N·m (71.5 lb ft)**
32 mm (1.25 in)	7/16-14	**97 N·m (71.5 lb ft)**	1/2-13	**158 N·m (116.5 lb ft)**
38 mm (1.5 in)	1/2-13	**158 N·m (116.5 lb ft)**	5/8-11	**310 N·m (228.6 lb ft)**
51 mm (2.0 in)	1/2-13	**158 N·m (116.5 lb ft)**	3/4-10	**473 N·m (348.9 lb ft)**
64 mm (2.5 in)	1/2-13	**158 N·m (116.5 lb ft)**	—	—
76 mm (3.0 in)	5/8-11	**310 N·m (228.6 lb ft)**	—	—
89 mm (3.5 in)	5/8-11	**310 N·m (228.6 lb ft)**	—	—
102 mm (4.0 in)	5/8-11	**310 N·m (228.6 lb ft)**	—	—
127 mm (5.0 in)	5/8-11	**310 N·m (228.6 lb ft)**	—	—
NOTE: *Final torque tolerance +/–* ***10%*** *of the given torque specification.*				

Tapered thread connection tightening

BSPT Thread size	NPTF Thread size	Turns From Finger Tight (TFFT)
1/8–28	1/8–27	2 to 3 full turns
1/4–19	1/4–18	2 to 3 full turns
3/8–19	3/8–18	2 to 3 full turns
1/2–14	1/2–14	2 to 3 full turns
3/4–14	3/4–14	2 to 3 full turns
1–11	1–11-1/2	1-1/2 to 2-1/2 full turns
1-1/4–11	1-1/4–11-1/2	1-1/2 to 2-1/2 full turns
1-1/2–11	1-1/2–11-1/2	1-1/2 to 2-1/2 full turns
2–11	2–11-1/2	1-1/2 to 2-1/2 full turns

Torques for Banjo-bolt connectors (copper washer style)

Metric bolt thread	Hex size	Torque
M8x1.25	**13 mm (0.5 in)**	**13 N·m (9.6 lb ft)**
M10x1.25	**17 mm (0.67 in)**	**16 N·m (11.8 lb ft)**
M12x1.5	**17 mm (0.67 in)**	**40 N·m (29.5 lb ft)**
M14x1.5	**19 mm (0.75 in)**	**45 N·m (33.2 lb ft)**
M16x1.5	**22 mm (0.9 in)**	**48 N·m (35.4 lb ft)**
M18x1.5	**24 mm (0.9 in)**	**50 N·m (36.9 lb ft)**
M20x1.5	**27 mm (1.1 in)**	**73 N·m (53.8 lb ft)**
M22x1.5	**32 mm (1.3 in)**	**73 N·m (53.8 lb ft)**
M24x1.5	**32 mm (1.3 in)**	**73 N·m (53.8 lb ft)**
NOTE: *Final torque tolerance +/– **10%** of the given torque specification.*		

Torques for 37° Flare hose connectors (JIC)

SAE Dash size	UN/UNF Thread size	Tube OD	Swivel nut torque
2	5/16–24	**3.18 mm (0.125 in)** 1/8	**8.25 N·m (6.1 lb ft)**
3	3/8–24	**4.76 mm (0.187 in)** 3/16	**11.5 N·m (8.5 lb ft)**
4	7/16–20	**6.35 mm (0.25 in)** 1/4	**15.5 N·m (11.4 lb ft)**
5	1/2–20	**7.94 mm (0.313 in)** 5/16	**20 N·m (14.8 lb ft)**
6	9/16–18	**9.52 mm (0.375 in)** 3/8	**25 N·m (18.4 lb ft)**
8	3/4–16	**12.7 mm (0.5 in)** 1/2	**52 N·m (38.4 lb ft)**
10	7/8–14	**15.88 mm (0.625 in)** 5/8	**81 N·m (59.7 lb ft)**
12	1-1/16–12	**19.05 mm (0.75 in)** 3/4	**112 N·m (82.6 lb ft)**
14	1-3/16–12	**22.22 mm (0.875 in)** 7/8	**133 N·m (98.1 lb ft)**
16	1-5/16–12	**25.4 mm (1.0 in)** 1	**155 N·m (114.3 lb ft)**
20	1-5/8–12	**31.75 mm (1.25 in)** 1-1/4	**180 N·m (132.8 lb ft)**
24	1-7/8–12	**38.1 mm (1.5 in)** 1-1/2	**225 N·m (166.0 lb ft)**
32	2-1/2–12	**50.8 mm (2.0 in)** 2	**348 N·m (256.7 lb ft)**
NOTE: *Final torque tolerance +/– **10%** of the given torque specification.*			

Torques for 30° Flare and 60° Cone hose connectors

Nominal size	BSPP Thread size	Hex	Swivel nut torque
5, 6, 6.3	G 1/4	**17.0 mm (0.7 in)**	**25 N·m (18.4 lb ft)**
8, 9, 10	G 3/8	**19.0 mm (0.7 in)**	**34 N·m (25.1 lb ft)**
12, 12.54	G 1/2	**22.0 mm (0.9 in)**	**64 N·m (47.2 lb ft)**
15, 16, 19	G 3/4	**30.0 mm (1.2 in)**	**132 N·m (97.4 lb ft)**
25	G 1	**36.0 mm (1.4 in)**	**196 N·m (144.6 lb ft)**
31.5, 32	G 1-1/4	**46.0 mm (1.8 in)**	**225 N·m (166.0 lb ft)**
38	G 1-1/2	**50.0 mm (2.0 in)**	**255 N·m (188.1 lb ft)**
50, 51	G 2	**65.0 mm (2.6 in)**	**316 N·m (233.1 lb ft)**
NOTE: *Final torque tolerance +/– **10%** of the given torque specification.*			

Installation of adjustable O-Ring Bosses (ORB) connectors

Adjustable port connectors are commonly found on shaped connectors, which allow for orientation of the connection. Adjustable port connectors utilize a locknut and back-up washer.

NOTICE: *Teflon coated O-rings do not require lubrication. For connections which are made into aluminum manifolds or with stainless steel connectors, it may be required to apply a lubricant to prevent galling.*

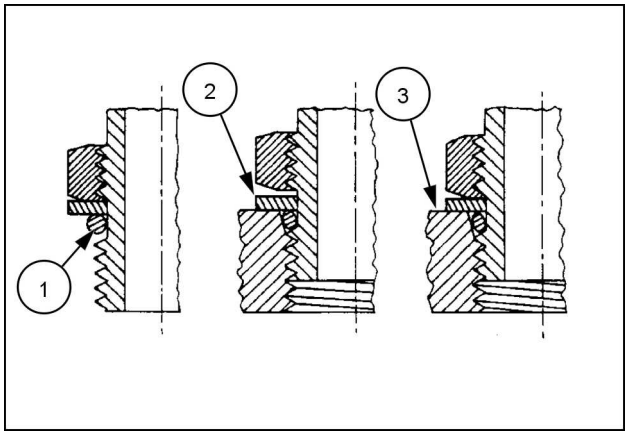

23085659 1

1. Remove protective connector caps only immediately prior to assembly.
2. Inspect the components to ensure that the male and female port threads and sealing surfaces are free of burrs, nicks, and scratches, or any foreign material. Do not use if impurities are found.
3. Make sure the washer **(2)** is on the fitting before the O-ring **(1)**.
4. Back off the lock nut as far as possible. Make sure that the back-up washer is not loose and it is as far up on the connector as possible.
5. Screw the connector into the port until the back-up washer **(2)** or the retaining ring contacts the face of the port **(3)**. Light wrenching may be necessary.
6. Unscrew the connector until you achieve the correct angle of the connector. Do not unscrew the connector more than one full turn.

   NOTICE: *Do not over tighten the connector you may damage the washer and increase the possibility of a leak to occur.*
7. Using two wrenches, hold the position of the connector and tighten the locknut to the proper torque value. See the torque tables for the proper torque value.

   NOTICE: *Make sure that the O-ring is not pinched and that the washer is seated flat on the face of the port. Do not over tighten and distort the back-up washer.*

Installation of non-adjustable O-Ring Bosses (ORB) connectors

Non-adjustable port connectors are commonly found on straight connectors, which do not require the installer to adjust the orientation of the connection.

NOTICE: *Teflon coated O-rings do not require lubrication. For connections which are made into aluminum manifolds or with stainless steel connectors, it may be required to apply a lubricant to prevent galling.*

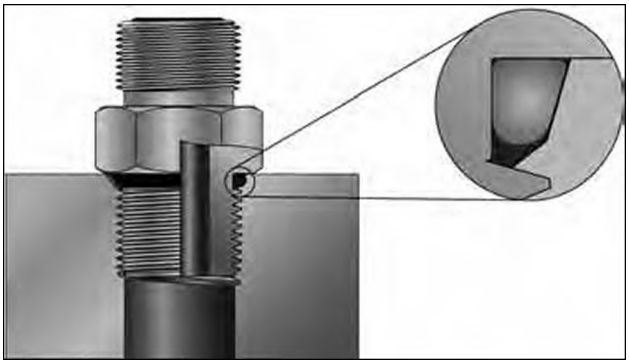

RAIL15TLB0538AA 2

1. Remove protective connector caps only immediately prior to assembly.
2. Inspect the components to ensure that the male and female port threads and sealing surfaces are free of burrs, nicks, and scratches, or any foreign material. Do not use if impurities are found.
3. Install the connector by hand.
4. Tighten to the proper torque. See the torque tables for the proper torque value.

Installation of tapered thread connectors

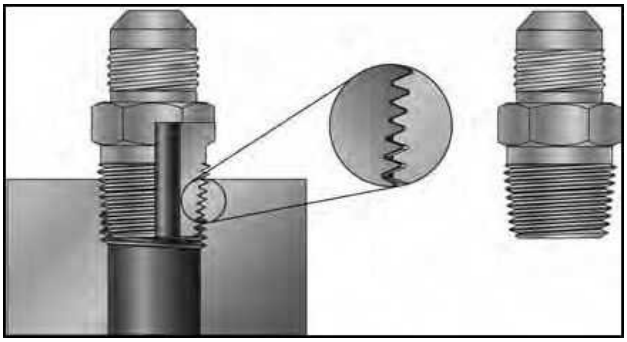

RAIL15TLB0539AA 3

1. Remove protective connector caps only immediately prior to assembly.

   NOTICE: *Pre-applied sealants, such as* ***LOCTITE® 503™ VIBRA-SEAL®*** *and/or powdered PTFE are the preferred sealants for tapered thread connectors. Non-preferred sealant types include PTFE tape, paste sealants, and anaerobic liquids. PTFE tape and paste sealants may contribute to hydraulic system contamination.*

2. Inspect the components to ensure that the male and female port threads and sealing surfaces are free of burrs, nicks, and scratches, or any foreign material. Do not use if impurities are found.

3. Apply the sealant/lubricant to the male pipe threads, if not pre-applied. The first one or two threads should not have sealant applied to them to avoid system contamination.

   NOTICE: *If you require a specific orientation of a shaped connector, take into consideration that final position before you proceed with the next steps. Never back off (loosen) tapered thread connectors to achieve alignment you will increase the possibility of leaks.*

4. Screw the connector into the port to the finger tight position.

5. Use a wrench to tighten the connector. See the torque table for the proper number of Turns From Finger Tight (TFFT).

   NOTE: *Normally, the total number of threads engaged should be between 3.5 and 6. If more than 6 threads are engaged, this may indicated an over-tightened connection. If fewer than 3.5 threads are engaged, this may indicate an under-tightened connection. For an over-tightened connection, check both threads and replace the part which has out-of-tolerance threads. If the connection is under-tightened, it is acceptable to tighten it further, but no more than one full turn.*

Installation of flange connectors

Flange connections typically have four bolts, although some flange connections may have more or fewer. The flange connector consists of four main components:

- A body (flange head)
- An O-ring
- One “captive” or two “split” flange clamps
- Bolts and washers

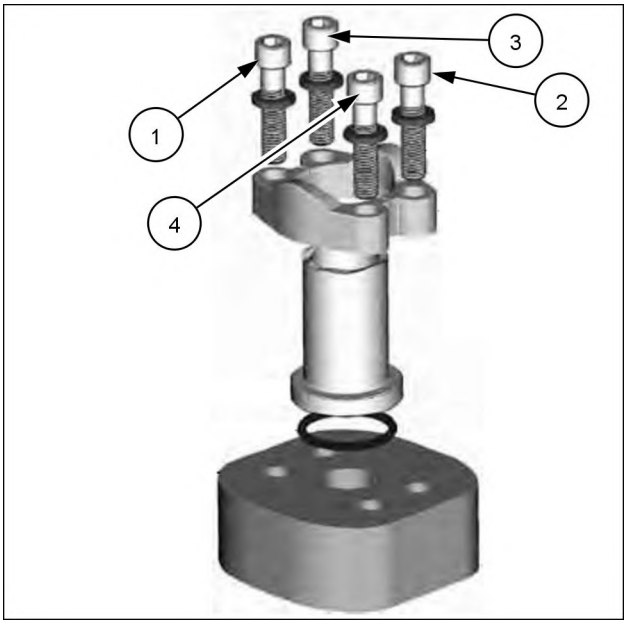

RAIL15TLB0611BA 4

1. Remove protective connector caps only immediately prior to assembly.
2. Inspect the components to ensure that the male and female port threads and sealing surfaces are free of burrs, nicks, and scratches, or any foreign material. Do not use if impurities are found.
3. Place the O-ring in the groove, the groove will be either on the port side or the flange side.
4. Assemble the flange head and the clamps.
5. Position and hold the flange assembly over the port.
6. Finger tighten the bolt hardware evenly and in a crossing pattern.
7. Tighten the bolt hardware to **60%** of the torque value. Use the same crossing pattern. See the torque tables for the proper torque value.

   NOTE: *For bolt hardware that is not Metric Class 8.8 and 10.9 or Inch Grade 8 see the “Torque - Minimum tightening torques for normal assembly”* ***Torque - Minimum tightening torques for normal assembly ()*** .
8. Tighten the bolt hardware 1 and 2 to **100%** of the torque value.
9. Tighten the bolt hardware 3 and 4 to **100%** of the torque value.

Installation of O-Ring Face Seal (ORFS) connections

1. Remove protective connector caps only immediately prior to assembly.
2. Inspect the components to ensure that the male and female threads and sealing surfaces are free of burrs, nicks, and scratches, or any foreign material. Do not use if impurities are found.
3. Check that the seal is properly installed in the groove on the male connector. If the seal is not pre-installed on the connector body, it must be installed using an assembly tool:
   A. Position the O-ring inside the assembly tool, against the plunger.
   B. Position the tool over the ORFS male end until it is against the bottom of the tool.
   C. Push the plunger of the tool until the O-ring is fully seated into the groove on the connector.
4. Place the face of the female connector against the face and O-ring of the male connector.
5. Thread the nut completely onto the male connector by hand.
6. Complete steps 1 through 5 for both ends of the hose or tube before continuing.
7. Hand-tighten any clamps that hold the position of the hose or tube.
8. Tighten the ORFS connection to the proper torque value. See the torque tables for the proper torque value.
9. Complete tightening of any clamps that hold the hose or tube only after both end fittings have been fully tightened.

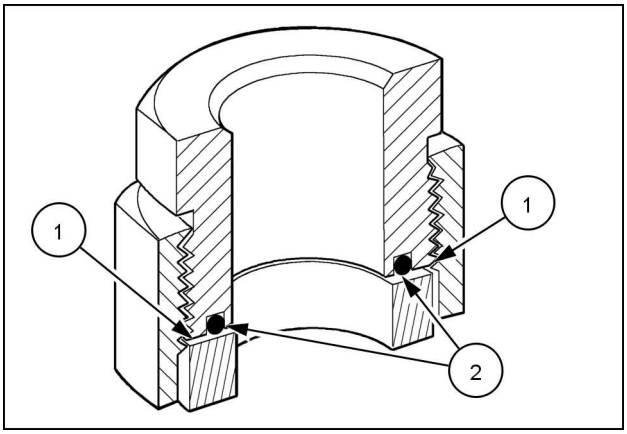

50011183 5

Installation of Flare-less Bite type and Flared connections

1. Remove protective connector caps only immediately prior to assembly.
2. Inspect the components to ensure that the male and female threads and sealing surfaces are free of burrs, nicks, and scratches, or any foreign material. Do not use if impurities are found.
3. Place the face of the female connector against the face and O-ring of the male connector.
4. Thread the nut completely onto the male connector by hand.
5. Complete steps 1 through 5 for both ends of the hose or tube before continuing.
6. Hand-tighten any clamps that hold the position of the hose or tube.
7. Tighten the connection to the proper torque value. See the torque tables for the proper torque value.
8. Complete tightening of any clamps that hold the hose or tube only after both end fittings have been fully tightened.

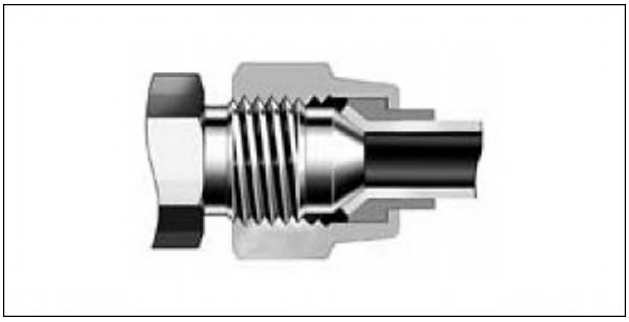

RAIL15TLB0541AA 6

Torque - Standard torque data for hydraulic connections

1150M	NA

General information

- Hydraulic connections require a minimum assembly torque in order to provide zero leakage at rated pressure with adequate fatigue resistance. Over-torquing of a hydraulic connection can also lead to leakage or failure. For some connections, CASE CONSTRUCTION requires a different torque value than is listed in the ISO and SAE standards.
- The torque values in this document should be used whenever possible or applicable.

  NOTICE: *Always follow the instructions in this manual for specific torque values when you service components. The information in this section is for general guidance only when a procedure contains no specific torque value.*

Tolerance

- The tolerance for all torque values is ± **10%**. This tolerance must include all assembly variation, not only the torque wrench repeatability.

Lubrication

Application of grease or other lubricants to hydraulic connectors should be avoided. If clean hydraulic oil is already on the connection, it is not required to remove the oil. Generally, application of grease:

- May cause a significant change in the torque required to properly tighten the connection.
- May reduce the connection's resistance to vibration.
- Excessive grease may displace an elastomer seal during tightening.
- Grease extrusion when connection is tightened may be mistaken for leakage.

CASE CONSTRUCTION products generally use O-Ring Boss (ORB) connectors that have Teflon™-coated O-rings, eliminating the need for O-ring lubrication during installation. For connections which are made into aluminum manifolds or with stainless steel connectors, it may be required to apply a lubricant to prevent galling.

Use of **LOCTITE®** and other thread-locking compounds is prohibited. These compounds:

- May cause a significant change in the torque required to properly tighten the connections.
- Reduce the serviceability of the joint.
- May prevent the O-ring from properly sealing if the compound gets on the O-ring.

Torque values for metric O-Ring Boss (ORB) port connections

	S-Series *		L-Series **	
Metric thread	**Ferrous N·m (lb ft) ± 10%**	**Non-Ferrous N·m (lb ft) ± 10%**	**Ferrous N·m (lb ft) ± 10%**	**Non-Ferrous N·m (lb ft) ± 10%**
M8 x 1	10.5 (7.7)	6.3 (4.6)	8.5 (6.3)	5 (3.7)
M10 x 1	21 (15.5)	12.5 (9.2)	15.5 (11.4)	9.3 (6.9)
M12 x 1.5	37 (27.3)	22 (16.2)	27 (19.9)	16 (11.8)
M14 x 1.5	47 (34.7)	28 (20.7)	37 (27.3)	22 (16.2)
M16 x 1.5	58 (42.8)	35 (25.8)	42 (31)	25 (18.4)
M18 x 1.5	74 (54.6)	44 (32.5)	47 (34.7)	28 (20.7)
M22 x 1.5	105 (77.4)	63 (46.5)	63 (46.5)	38 (28)
M27 x 2	178 (131.3)	107 (78.9)	105 (77.4)	63 (46.5)
M30 x 2	225 (166)	135 (99.6)	136 (100.3)	82 (60.5)
M33 x 2	325 (239.7)	195 (143.8)	168 (123.9)	101 (74.5)
M42 x 2	345 (254.5)	207 (152.7)	220 (162.3)	132 (97.4)
M48 x 2	440 (324.5)	264 (194.7)	273 (201.4)	164 (121)
M60 x 2	525 (387.2)	315 (232.3)	330 (243.4)	198 (146)

* S-Series connectors are used with O-Ring Face Seals (ORFS).

** L-Series connectors are used with **37°** flare.

Torque values for metric O-Ring Boss (ORB) port plugs

	Ferrous		Non-ferrous
Metric thread	**Internal hex N·m (lb ft) ± 10%**	**External hex N·m (lb ft) ± 10%**	**N·m (lb ft) ± 10%**
M8 x 1	8.5 (6.3)	10.5 (7.7)	6.3 (4.6)
M10 x 1	16 (11.8)	21 (15.5)	12.5 (9.2)
M12 x 1.5	23 (17)	37 (27.3)	22 (16.2)
M14 x 1.5	47 (34.7)	47 (34.7)	28 (20.7)
M16 x 1.5	58 (42.8)	58 (42.8)	35 (25.8)
M18 x 1.5	74 (54.6)	74 (54.6)	44 (32.5)
M22 x 1.5	105 (77.4)	105 (77.4)	63 (46.5)
M27 x 2	178 (131.3)	178 (131.3)	107 (78.9)
M30 x 2	225 (166)	225 (166)	135 (99.6)
M33 x 2	325 (239.7)	325 (239.7)	195 (143.8)
M42 x 2	345 (254.5)	345 (254.5)	207 (152.7)
M48 x 2	440 (324.5)	440 (324.5)	264 (194.7)
M60 x 2	525 (387.2)	525 (387.2)	315 (232.3)

Torque values for port connections (British Standard Pipe Parallel (BSPP) thread ports and stud ends)

	Metric tube Outside Diameter (OD) mm (in)		Ferrous		Non-Ferrous	
BSPP thread G- Gas; A- medium coarse threads	**S-Series ***	**L-Series ****	**S-Series N·m (lb ft) ± 10%**	**L-Series N·m (lb ft) ± 10%**	**S-Series N·m (lb ft) ± 10%**	**L-Series N·m (lb ft) ± 10%**
G 1/8 A	–	6 (0.236)	–	21 (15.5)	–	12.5 (9.2)
G 1/4 A	6 (0.236) or 8 (0.315)	8 (0.315) or 10 (0.394)	63 (46.5)	53 (39.1)	38 (28)	32 (23.6)
G 3/8 A	10 (0.394) or 12 (0.472)	12 (0.472)	95 (70.1)	84 (62)	57 (42)	50 (36.9)
G 1/2 A	16 (0.630)	15 (0.591) or 18 (0.709)	136 (100.3)	105 (77.4)	82 (60.5)	63 (46.5)
G 3/4 A	20 (0.787)	22 (0.866)	210 (154.9)	210 (154.9)	126 (92.9)	126 (92.9)
G 1 A	25 (0.984)	28 (1.102)	400 (295)	400 (295)	240 (177)	240 (177)
G 1 1/4 A	30 (1.181)	35 (1.378)	525 (387.2)	525 (387.2)	315 (232.3)	315 (232.3)
G 1 1/2 A	38 (1.496)	42 (1.654)	660 (486.8)	660 (486.8)	396 (292.1)	396 (292.1)

* S-Series connectors are used with O-Ring Face Seals (ORFS).

** L-Series connectors are used with **37°** flare.

Torque values for metric port connections (Metric face-seal ports and stud ends)

	Metric tube Outside Diameter (OD) mm (in)		Ferrous		Non-Ferrous	
Metric thread	**S-Series ***	**L-Series ****	**S-Series N·m (lb ft) ± 10%**	**L-Series N·m (lb ft) ± 10%**	**S-Series N·m (lb ft) ± 10%**	**L-Series N·m (lb ft) ± 10%**
M10 x 1	–	4 (0.157)	–	21 (15.5)	–	12.5 (9.2)
M12 x 1.5	4 (0.157)	6 (0.236)	47 (34.7)	32 (23.6)	28 (20.7)	19 (14)
M14 x 1.5	5 (0.197)	7 (0.276)	63 (46.5)	53 (39.1)	38 (28)	32 (23.6)
M16 x 1.5	7 (0.276)	9 (0.354)	84 (62)	63 (46.5)	50 (36.9)	38 (28)
M18 x 1.5	8 (0.315)	11 (0.433)	105 (77.4)	84 (62)	63 (46.5)	50 (36.9)
M20 x 1.5	10 (0.394)	–	147 (108.4)	–	88 (64.9)	–
M22 x 1.5	12 (0.472)	14 (0.551)	158 (116.5)	147 (108.4)	95 (70.1)	88 (64.9)
M26 x 1.5	–	18 (0.709)	–	210 (154.9)	–	126 (92.9)
M27 x 1.2	16 (0.630)	–	210 (154.9)		126 (92.9)	–
M33 x 2	20 (0.787)	23 (0.906)	400 (295)	400 (295)	240 (177)	240 (177)
M42 x 2	25 (0.984)	30 (1.181)	525 (387.2)	525 (387.2)	315 (232.3)	315 (232.3)
M48 x 2	32 (1.260)	36 (1.417)	630 (464.7)	630 (464.7)	396 (292.1)	396 (292.1)

* S-Series connectors are used with O-Ring Face Seals (ORFS).

** L-Series connectors are used with **37°** flare.

Torque values for Inch O-Ring Boss (ORB) port non-adjustable connections

			S-Series *		L-Series **	
SAE dash size	UN/UNF thread size	Inch tube OD mm (in)	Ferrous N·m (lb ft) ± 10%	Non-Ferrous N·m (lb ft) ± 10%	Ferrous N·m (lb ft) ± 10%	Non-Ferrous N·m (lb ft) ± 10%
2	5/16-24	3.18 (0.125)	–	–	8.5 (6.3)	5 (3.7)
3	3/8-24	4.76 (0.187)	15.5 (11.4)	9.3 (6.9)	10.5 (7.7)	6.3 (4.6)
4	7/16-20	6.35 (0.250)	37 (27.3)	22 (16.2)	19 (14)	11.5 (8.5)
5	1/2-20	7.94 (0.313)	42 (31)	25 (18.4)	26 (19.2)	15.5 (11.4)
6	9/16-18	9.52 (0.375)	47 (34.7)	28 (20.7)	32 (23.6)	19 (14)
8	3/4-16	12.7 (0.500)	89 (65.6)	53 (39.1)	53 (39.1)	32 (23.6)
10	7/8-14	15.88 (0.625)	121 (89.2)	73 (53.8)	63 (46.5)	38 (28)
12	1-1/16-12	19.05 (0.750)	178 (131.3)	107 (78.9)	100 (73.8)	60 (44.3)
14	1-3/16-12	22.22 (0.875)	225 (166)	135 (99.6)	131 (96.6)	79 (58.3)
16	1-5/16-12	25.4 (1.000)	283 (208.7)	170 (125.4)	156 (115.1)	94 (69.3)
20	1-5/8-12	31.75 (1.250)	300 (221.3)	180 (132.8)	210 (154.9)	126 (92.9)
24	1-7/8-12	38.1 (1.500)	388 (286.2)	233 (171.9)	220 (162.3)	132 (97.4)
32	2-1/2-12	50.8 (2.000)	388 (286.2)	233 (171.9)	315 (232.3)	189 (139.4)

* S-Series connectors are used with O-Ring Face Seals (ORFS).

** L-Series connectors are used with **37°** flare.

Torque values for inch O-Ring Boss (ORB) port adjustable connections

			S-Series *		L-Series **	
SAE dash size	UN/UNF thread size	Inch tube OD mm (in)	Ferrous N·m (lb ft) ± 10%	Non-Ferrous N·m (lb ft) ± 10%	Ferrous N·m (lb ft) ± 10%	Non-Ferrous N·m (lb ft) ± 10%
2	5/16-24	3.18 (0.125)	–	–	8.5 (6.3)	5 (3.7)
3	3/8-24	4.76 (0.187)	10.5 (7.7)	9.3 (6.9)	10.5 (7.7)	6.3 (4.6)
4	7/16-20	6.35 (0.250)	21 (15.5)	21 (15.5)	19 (14)	11.5 (8.5)
5	1/2-20	7.94 (0.313)	42 (31)	25 (18.4)	26 (19.2)	15.5 (11.4)
6	9/16-18	9.52 (0.375)	47 (34.7)	28 (20.7)	32 (23.6)	19 (14)
8	3/4-16	12.7 (0.500)	89 (65.6)	53 (39.1)	53 (39.1)	32 (23.6)
10	7/8-14	15.88 (0.625)	121 (89.2)	73 (53.8)	63 (46.5)	38 (28)
12	1-1/16-12	19.05 (0.750)	178 (131.3)	107 (78.9)	100 (73.8)	60 (44.3)
14	1-3/16-12	22.22 (0.875)	225 (166)	135 (99.6)	131 (96.6)	79 (58.3)
16	1-5/16-12	25.4 (1.000)	285 (210.2)	170 (125.4)	156 (115.1)	94 (69.3)
20	1-5/8-12	31.75 (1.250)	300 (221.3)	180 (132.8)	210 (154.9)	126 (92.9)
24	1-7/8-12	38.1 (1.500)	388 (286.2)	233 (171.9)	220 (162.3)	132 (97.4)
32	2-1/2-12	50.8 (2.000)	388 (286.2)	233 (171.9)	315 (232.3)	189 (139.4)

* S-Series connectors are used with O-Ring Face Seals (ORFS).

** L-Series connectors are used with **37°** flare.

Torque values for inch O-Ring Boss (ORB) port plugs

		Ferrous		Non-Ferrous
SAE dash size	UN/UNF thread size	Internal hex N·m (lb ft) ± 10%	External hex N·m (lb ft) ± 10%	N·m (lb ft) ± 10%
2	5/16-24	7.5 (5.5)	12.5 (9.2)	7.5 (5.5)
3	3/8-24	14.5 (10.7)	21 (15.5)	12.5 (9.2)
4	7/16-20	21 (15.5)	37 (27.3)	22 (16.2)
5	1/2-20	28 (20.7)	42 (31)	25 (18.4)
6	9/16-18	47 (34.7)	47 (34.7)	28 (20.7)
8	3/4-16	89 (65.6)	89 (65.6)	53 (39.1)
10	7/8-14	116 (85.6)	116 (85.6)	70 (51.6)
12	1-1/16-12	176 (129.8)	176 (129.8)	106 (78.2)
14	1-3/16-12	247 (182.2)	247 (182.2)	148 (109.2)
16	1-5/16-12	284 (209.5)	284 (209.5)	170 (125.4)
20	1-5/8-12	357 (263.3)	357 (263.3)	214 (157.8)
24	1-7/8-12	441 (325.3)	441 (325.3)	265 (195.5)
32	2-1/2-12	536 (395.3)	536 (395.3)	322 (237.5)

Torque values for four-bolt flange connections (Metric Screws, Class 10.9)

Metric size mm	Imperial size in	Screw code 61	Code 61 N·m (lb ft) ± 10%	Screw code 62	Code 62 N·m (lb ft) ± 10%
13	1/2	M8 x 1.25	34 (25.1)	M8 x 1.25	34 (25.1)
19	3/4	M10 x 1.5	74 (54.6)	M10 x 1.5	74 (54.6)
25	1	M10 x 1.5	74 (54.6)	M12 x 1.75	137 (101)
32	1-1/4	M10 x 1.5	74 (54.6)	M12 x 1.75	137 (101)
				M14 x 1.5	189 (139.4)
38	1-1/2	M12 x 1.75	137 (101)	M16 x 2	310 (228.6)
51	2	M12 x 1.75	137 (101)	M20 x 2.5	575 (424.1)
64	2-1/2	M12 x 1.75	137 (101)	M24 x 3	575 (424.1)
76	3	M16 x 2	310 (228.6)	M30 x 3.5	680 (501.5)
89	3-1/2	M16 x 2	310 (228.6)	–	–
102	4	M16 x 2	310 (228.6)	–	–
127	5	M16 x 2	310 (228.6)	–	–

Torque values for four-bolt flange connections (Metric Screws, Class 8.8)

Metric size mm	Imperial size in	Screw code 61	Code 61 N·m (lb ft) ± 10%	Screw code 62	Code 62 N·m (lb ft) ± 10%
13	1/2	M8 x 1.25	29 (21.4)	M8 x 1.25	29 (21.4)
19	3/4	M10 x 1.5	57(42)	M10 x 1.5	57(42)
25	1	M10 x 1.5	57(42)	M12 x 1.75	100 (73.8)
32	1-1/4	M10 x 1.5	57(42)	M12 x 1.75	100 (73.8)
				M14 x 1.5	160 (118)
38	1-1/2	M12 x 1.75	100 (73.8)	M16 x 2	250 (184.4)
51	2	M12 x 1.75	100 (73.8)	M20 x 2.5	500 (368.8)
64	2-1/2	M12 x 1.75	100 (73.8)	M24 x 3	575 (424.1)
76	3	M16 x 2	250 (184.4)	M30 x 3.5	680 (501.5)
89	3-1/2	M16 x 2	250 (184.4)	–	–
102	4	M16 x 2	250 (184.4)	–	–
127	5	M16 x 2	250 (184.4)	–	–

Torque values for four-bolt flange connections (Inch Screws, Grade 8)

Metric size mm	Imperial size in	Screw code 61	Code 61 N·m (lb ft) ± 10%	Screw code 62	Code 62 N·m (lb ft) ± 10%
13	1/2	5/16-18	34 (25.1)	5/16-18	34 (25.1)
19	3/4	3/8-16	63 (46.5)	3/8-16	63 (46.5)
25	1	3/8-16	63 (46.5)	7/16-14	97 (71.5)
32	1-1/4	7/16-14	97 (71.5)	1/2-13	158 (116.5)
38	1-1/2	1/2-13	158 (116.5)	5/8-11	310 (228.6)
51	2	1/2-13	158 (116.5)	3/4-10	473 (348.9)
64	2-1/2	1/2-13	158 (116.5)	–	–
76	3	5/8-11	310 (228.6)	–	–
89	3-1/2	5/8-11	310 (228.6)	–	–
102	4	5/8-11	310 (228.6)	–	–
127	5	5/8-11	310 (228.6)	–	–

Tapered thread connection tightening

British Standard Pipe Taper (BSPT) thread size (inch)	National Pipe Thread Fuel (NPTF) thread size (inch)	Turns from finger tight
1/8-28	1/8-27	2 - 3
1/4-19	1/4-18	2 - 3
3/8-19	3/8-18	2 - 3
1/2-14	1/2-14	2 - 3
3/4-14	3/4-14	2 - 3
1-11	1-11 1/2	1.5 - 2.5
1-1/4-11	1-1/4-11 1/2	1.5 - 2.5
1-1/2-11	1-1/2-11 1/2	1.5 - 2.5
2-11	2-11 1/2	1.5 - 2.5

Torque values for banjo bolt connections (Copper washer style)

Bolt thread (metric)	Hex size (mm)	Torque N·m (lb ft) ± 10%
M8 x 1.25	13	13 (9.6)
M10 x 1.25	17	16 (11.8)
M12 x 1.5	17	40 (29.5)
M14 x 1.5	19	45 (33.2)
M16 x 1.5	22	48 (35.4)
M18 x 1.5	24	50 (36.9)
M20 x 1.5	27	73 (53.8)
M22 x 1.5	32	73 (53.8)
M24 x 1.5	32	73 (53.8)

Torque values for O-Ring Face Seals (ORFS) connections

SAE dash size	UN/UNF thread size	Inch tube OD (mm)	Metric tube OD (mm)	Hex size (mm) (Reference only)	* Swivel nut torque N·m (lb ft) ± 10%	** Swivel nut torque N·m (lb ft) ± 10%
4	9/16-18	6.35	6	17	27 (19.9)	27 (19.9)
5	5/8-18	7.94	8	19	34 (25.1)	34 (25.1)
6	11/16-16	9.52	10	22	44 (32.5)	44 (32.5)
8	13/16-16	12.7	12	24	65 (47.9)	65 (47.9)
10	1-14	15.88	16	30	100 (73.8)	100 (73.8)
12	1-3/16-12	19.05	20	36	150 (110.6)	131 (96.6)
14	1-5/16-12	22.23	22	41	163 (120.2)	131 (96.6)
16	1-7/16-12	25.4	25	41	210 (154.9) ***	131 (96.9)
20	1-11/16-12	31.75	30	50	280 (206.5) ***	178 (131.3)
24	2-12	38.1	38	60	375 (276.6) ***	210 (154.9)

* High/Medium-pressure applications > **50 bar** (**725 psi**).

** Low-pressure applications < **50 bar** (**725 psi**).

*** It is recommended to use a four-bolt flange connection instead of O-Ring Face Seals (ORFS) sizes "16" and up.

Torque values for 37° flare connections - Joint Industry Council (JIC)

SAE dash size	UN/UNF thread size	Metric tube OD (mm)	Inch tube OD (mm)	Swivel nut torque N·m (lb ft) ± 10%
2	5/16-24	–	3.18	8.25 (6.1)
3	3/8-24	–	4.76	11.5 (8.5)
4	7/16-20	6	6.35	15.5 (11.4)
5	1/2-20	8	7.94	20 (14.8)
6	9/16-18	10	9.52	25 (18.4)
8	3/4-16	12	12.7	52 (38.4)
10	7/8-14	16	15.88	81 (59.7)
12	1-1/16-12	20	19.05	112 (82.6)
14	1-3/16-12	–	22.22	133 (98.1)
16	1-5/16-12	25	25.4	155 (114.3)
20	1-5/8-12	30/32	31.75	180 (132.8)
24	1-7/8-12	38	38.1	225 (166)
32	2-1/2-12	50	50.8	348 (256.7)

Torque values for 30° flare, 60° cone connections

Nominal size (mm)	British Standard Pipe Parallel (BSPP) thread size	Hex size (mm)	Swivel nut torque N·m (lb ft) ± 10%
5, 6, 6.3	G 1/4	17	25 (18.4)
8, 9, 10	G 3/8	19	34 (25.1)
12, 12.5	G 1/2	22	64 (47.2)
15, 16, 19	G 3/4	30	132 (97.4)
25	G 1	36	196 (144.6)
31.5, 32	G 1-1/4	46	225 (166)
38	G 1-1/2	50	255 (188.1)
50, 51	G 2	65	316 (223.1)

Torque - Special torques

1150M	NA

Ripper

Component	Torque
Ripper mounting bolts	**700 – 1260 Nm** (**515 – 925 lb ft**)
Ripper pin retaining and tube cover bolts	**145 – 260 Nm** (**110 – 190 lb ft**)

Hydraulic Pump

Component	Torque
Non PTO pump	
Cover bolts	**66 – 80 Nm** (**50 – 60 lb ft**)
PTO type pump	
Air vent	**9 Nm (80 lb in)**
Pump housing bolts	**271 Nm (200 lb ft)**
PTO shaft retainer	**68 Nm (50 lb ft)**
Set screw PTO shaft retainer	**9 Nm (80 lb in)**
Shaft cover screws	**8 – 9 Nm (65 – 75 lb in)**

Fuse and Relay Blocks

Component	Torque
Fuse block mounting	**2.7 Nm** (**24 lb in**)
Bussed studs	**8.5 Nm** (**75 lb in**)

Power Relays

Component	Torque
Output studs	**5.4 Nm** (**48 lb in**)
Input studs	**16.3 Nm** (**144 lb in**)

Engine Mounts

Component	Torque
Engine mount bolts to chassis	**205 – 230 Nm** (**151 – 170 lb ft**)
Rear engine mount brackets to bell housing	**118 – 133 Nm** (**87 – 98 lb ft**)
Front engine mount bracket to engine block	**118 – 133 Nm** (**87 – 98 lb ft**)
Starter mounting bolts	**68 – 77 Nm** (**50 – 57 lb ft**)

Engine to Pumps Drive Shaft

Component	Torque
Flywheel mount bolts	**285 – 305 Nm (210 – 225 lb ft)**

Pumps and Motors

Component	Torque
Pump mount bolts to frame	**68 – 81 Nm** (**50 – 60 lb ft**)
Motor mount bolts to final drives	**250 – 280 N·m** (**184 – 207 lb ft**)
Pump to motor hoses spit flange clamps	**90 – 100 Nm** (**66 – 74 lb ft**)
Inlet hose clamps	**6.5 – 7.6 Nm** (**58 – 68 lb in**)

Rear Frame Cover

Component	Torque
M24 hex bolts	**449 – 725 N·m** (**331 – 535 lb ft**)
M16 hex bolts	**230 – 371 N·m** (**170 – 274 lb ft**)

Track

Component	Torque
Master link bolts (Use **LOCTITE® 242®** on master link bolts.)	**340.0 – 380.0 N·m** (**250.8 – 280.3 lb ft**)
Standard link shoe bolts	**381.0 – 435.0 N·m** (**281.0 – 320.8 lb ft**)

Final Drives

Component	Torque
Drive Hub Rolling Torque	**8 – 15 N·m** (**71 – 133 lb in**)
Input Shaft Bearing Retainer Plate Mounting Bolts	**77 – 87 N·m** (**57 – 64 lb ft**)
Park Brake Housing Plate	**77 – 87 N·m** (**57 – 64 lb ft**)
Brake Housing Cover - M20 X 50 12 pnt	**650 – 730 N·m** (**479 – 538 lb ft**)
Brake Line Fitting	**55 – 60 N·m** (**41 – 44 lb ft**)
Brake Bleeder Fitting	**24 – 30 N·m** (**18 – 22 lb ft**)
Counter Shaft Bearing Retainer Plate Mounting Bolts	**125 – 150 N·m** (**92 – 111 lb ft**)
Spindle Housing	**310 – 380 N·m** (**229 – 280 lb ft**)
Ring Gear Retaining Plate	**310 – 380 N·m** (**229 – 280 lb ft**)
Sun Gear Shaft Retaining Plate	**125 – 150 N·m** (**92 – 111 lb ft**)
Output Gear Bearing Retainer Plate Mounting Bolts	**125 – 150 N·m** (**92 – 111 lb ft**)
Planetary Carrier to Drive Hub	**310 – 380 N·m** (**229 – 280 lb ft**)
Final Drive to Frame Mounting Bolts	**656 – 725 N·m** (**484 – 535 lb ft**)
Fill Check Plug	**24 – 30 N·m** (**18 – 22 lb ft**)
Drain Plug	**24 – 30 N·m** (**18 – 22 lb ft**)

Cab Mounting

Component	Torque
Support mount bolts	**733 – 854 N·m** (**541 – 630 lb ft**)
Brush guard mount bolts (if equipped)	**587 – 794 N·m** (**433 – 586 lb ft**)

Air Conditioning Compressor

Component	Torque
Compressor rotor shaft nut	**15 – 20 Nm** (**11 – 15 lb ft**)
Oil filler plug	**15 – 24 Nm** (**11 – 18 lb ft**)
Dust cover screws	**7 – 11 Nm** (**5 – 8 lb ft**)

Lift Cylinder

Component	Torque
Piston bolt	**1820 – 1600 N·m** (**1342 – 1180 lb ft**)
Gland	**135 – 542 Nm** (**100 – 400 lb ft**)

Tilt Cylinder

Component	Torque
Piston bolt	**2160 – 2450 N·m** (**1593 – 1807 lb ft**)
Gland	**135 – 542 Nm** (**100 – 400 lb ft**)

Angle Cylinder

Component	Torque
Piston bolt	**2160 – 2450 N·m** (**1593 – 1807 lb ft**)
Gland	**135 – 542 Nm** (**100 – 400 lb ft**)

Ripper Cylinder

Component	Torque
Piston bolt	**1600 – 1820 N·m** (**1180 – 1342 lb ft**)
Gland	**135 – 542 Nm** (**100 – 400 lb ft**)

Starter

Component	Torque
Mounting bolts	**68 – 77 Nm** (**50 – 57 lb ft**)
Battery terminal nut	**17.7 – 24.5 Nm** (**13 – 18 lb ft**)
Solenoid + screw	**2.6 – 4.5 Nm** (**23 – 40 lb in**)

Multifunction valve

Component	Torque
Brake valve	**3 – 4 N·m** (**2 – 3 lb ft**)
Brake valve screws	**3 – 4 N·m** (**2 – 3 lb ft**)
Cartridge valve	**32.6 – 35.4 N·m** (**24.0 – 26.1 lb ft**)
Check valve	**150 – 177 N·m** (**111 – 131 lb ft**)

Basic instructions - Shop and assembly

1150M	NA

Shimming

For each adjustment operation, select adjusting shims and measure the adjusting shims individually using a micrometer, then add up the recorded values. Do not rely on measuring the entire shimming set, which may be incorrect, or the rated value shown on each shim.

Rotating shaft seals

For correct rotating shaft seal installation, proceed as follows:

1. Before assembly, allow the seal to soak in the oil it will be sealing for at least thirty minutes.
2. Thoroughly clean the shaft and check that the working surface on the shaft is not damaged.
3. Position the sealing lip facing the fluid.

   NOTE: *With hydrodynamic lips, take into consideration the shaft rotation direction and position the grooves so that they will move the fluid towards the inner side of the seal.*
4. Coat the sealing lip with a thin layer of lubricant (use oil rather than grease). Fill the gap between the sealing lip and the dust lip on double lip seals with grease.
5. Insert the seal in its seat and press down using a flat punch or seal installation tool. Do not tap the seal with a hammer or mallet.
6. While you insert the seal, check that the seal is perpendicular to the seat. When the seal settles, make sure that the seal makes contact with the thrust element, if required.
7. To prevent damage to the seal lip on the shaft, position a protective guard during installation operations.

O-ring seals

Lubricate the O-ring seals before you insert them in the seats. This will prevent the O-ring seals from overturning and twisting, which would jeopardize sealing efficiency.

Sealing compounds

Apply a sealing compound on the mating surfaces when specified by the procedure. Before you apply the sealing compound, prepare the surfaces as directed by the product container.

Spare parts

Only use CNH Original Parts or CASE CONSTRUCTION Original Parts.

Only genuine spare parts guarantee the same quality, duration, and safety as original parts, as they are the same parts that are assembled during standard production. Only CNH Original Parts or CASE CONSTRUCTION Original Parts can offer this guarantee.

When ordering spare parts, always provide the following information:

- Machine model (commercial name) and Product Identification Number (PIN)
- Part number of the ordered part, which can be found in the parts catalog

Protecting the electronic and/or electrical systems during charging and welding

To avoid damage to the electronic and/or electrical systems, always observe the following practices:

1. Never make or break any of the charging circuit connections when the engine is running, including the battery connections.
2. Never short any of the charging components to ground.
3. Always disconnect the ground cable from the battery before arc welding on the machine or on any machine attachment.
   - Position the welder ground clamp as close to the welding area as possible.
   - If you weld in close proximity to a computer module, then you should remove the module from the machine.
   - Never allow welding cables to lie on, near, or across any electrical wiring or electronic component while you weld.
4. Always disconnect the negative cable from the battery when charging the battery in the machine with a battery charger.

   NOTICE: *If you must weld on the unit, you must disconnect the battery ground cable from the machine battery. The electronic monitoring system and charging system will be damaged if this is not done.*
5. Remove the battery ground cable. Reconnect the cable when you complete welding.

⚠ WARNING

Battery acid causes burns. Batteries contain sulfuric acid.
Avoid contact with skin, eyes or clothing. Antidote (external): Flush with water. Antidote (eyes): flush with water for 15 minutes and seek medical attention immediately. Antidote (internal): Drink large quantities of water or milk. Do not induce vomiting. Seek medical attention immediately.
Failure to comply could result in death or serious injury.

W0111A

Special tools

The special tools that CASE CONSTRUCTION suggests and illustrate in this manual have been specifically researched and designed for use with CASE CONSTRUCTION machines. The special tools are essential for reliable repair operations. The special tools are accurately built and rigorously tested to offer efficient and long-lasting operation.

By using these tools, repair personnel will benefit from:

- Operating in optimal technical conditions
- Obtaining the best results
- Saving time and effort
- Working in safe conditions

Engine cooling system - Basic instructions

1150M	NA

Depending on the date of manufacture, your cooling system may be equipped with conventional ethylene glycol coolant such as **CNH XHD HEAVY DUTY COOLANT / ANTI-FREEZE** or an Organic Acid Technology (OAT) coolant solution such as **CASE AKCELA ACTIFULL™ OT EXTENDED LIFE COOLANT**. You can easily identify **CASE AKCELA ACTIFULL™ OT EXTENDED LIFE COOLANT** by its yellow color. You should never mix the coolant types.

The coolant solution used must meet the following CNH Industrial material specifications for either coolant type:

- **MAT3624** for OAT coolant
- **MAT3620** for conventional coolant

The decal shown is located near the fill point of the cooling system whenever the factory fill is **CASE AKCELA ACTIFULL™ OT EXTENDED LIFE COOLANT**. This decal is available in three different sizes. See the table below for the associated part numbers.

CNH Industrial part number	Size
47757330	**50 mm** x **50 mm**
47757331	**75 mm** x **75 mm**
47757332	**100 mm** x **100 mm**

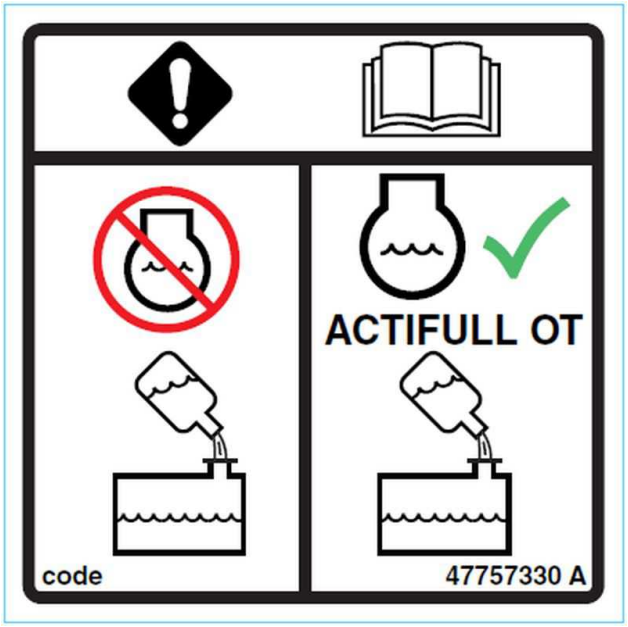

47757330 1

NOTICE: *NEVER mix OAT coolant with conventional coolant. Under no circumstances should you top off a cooling system with only water. You can use a refractometer to check the concentration level. You should not use Supplemental Coolant Additives (SCA) when using* ***CASE AKCELA ACTIFULL™ OT EXTENDED LIFE COOLANT****. Change the coolant solution at the recommended change interval.*

If you need to change a machine from conventional coolant to OAT coolant or vice versa, you should follow the “Changing coolant types” procedure below to attain the full benefit of the coolant.

Changing coolant types

To change coolant from OAT coolant to conventional coolant (or vice versa):

1. Empty the engine cooling system by draining the coolant into a suitable container.
2. Fill the system with clean water.
3. Start the engine and run the engine for at least **30 min**.

   NOTE: *Make sure that you activate the heating system (if equipped) to circulate fluid through the heater core.*
4. Repeat Steps 1 to 3 for a total of two washes.
5. Fill the system with conventional coolant (or OAT coolant).
6. Operate the engine until it is warm. Inspect the machine for leaks.
7. If you are changing to OAT coolant, then attach the decal (CNH Industrial part number 47757330) to indicate the use of OAT coolant in the cooling system.

You may notice the older version of the OAT decal (CNH Industrial part number 47488993) on some applications.

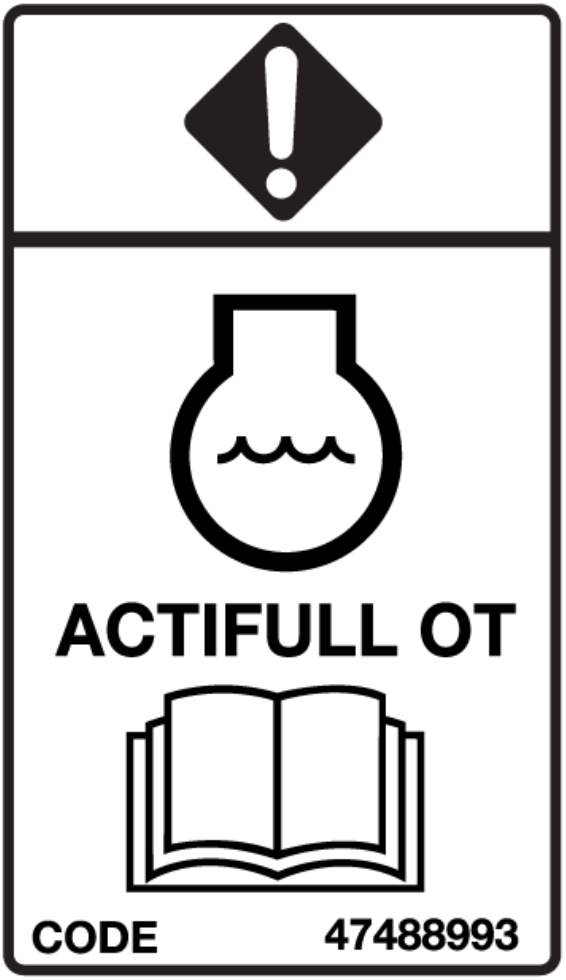

47488993 2

Definitions

Conventional coolant:

A coolant that relies on inorganic inhibitors such as silicates, nitrites, and phosphates for corrosion and cavitation protection.

Organic Acid Technology (OAT) coolant:

A coolant that relies on inhibitors such as organic acid salts for corrosion and cavitation protection.

Maintenance chart

Maintenance action	Check	Grease	Drain fluid	Replace	Lubricate	Cleaning	Change fluid		Page no.
Daily inspection									
General	x								**General (10)**
Every 10 hours									
Engine oil	x								**Engine oil (10.304)**
Engine coolant	x								**Engine coolant (10.400)**
Hydraulic oil	x								**Hydraulic oil (35)**
Grease points		x							**Grease points (90)**
Initial 20 hours									
Track shoe bolt torque	x								**Track shoe bolt torque (48.100)**
Every 50 hours									
Fuel pre-filter - Drain condensation			x						**Fuel pre-filter - Drain condensation (10.218)**
Initial 100 hours									
Engine oil and filter (Initial) - Replace				x					**Engine oil and filter (Initial) - Replace (10.304)**
Replace hydraulic oil filters (Initial)				x					**Replace hydraulic oil filters (Initial) (35)**
Fuel filter (Initial)				x					**Fuel filter (Initial) (10.218)**
Track tension (Initial)	x								**Track tension (Initial) (48.134)**
Final drive oil (initial)				x					**Final drive oil (initial) (48.140)**
Every 500 hours									
Change engine oil and filter					x				**Change engine oil and filter (10.304)**
Fuel filters				x					**Fuel filters (10.206)**
Battery electrolyte level	x								**Battery electrolyte level (55.000)**
Every 1000 hours									
Fuel tank cap						x			**Fuel tank cap (10.216)**
Fuel tank sediment			x						**Fuel tank sediment (10.216)**
Hydraulic reservoir breather				x					**Hydraulic reservoir breather (35.300)**
Final drive oil				x					**Final drive oil (48)**
Drive shaft slip spline		x							**Drive shaft slip spline (14)**
Every 1500 hours									
Drive belt				x					**Drive belt (10)**
Engine breather filter				x					**Engine breather filter (10.254)**
Engine valve clearance	x								**Engine valve clearance (10.254)**
Every 2000 hours									
Engine coolant					x				**Engine coolant (10.400)**
Hydraulic and hydrostatic drive filter and fluid				x					**Hydraulic and hydrostatic drive filter and fluid (35.300)**
Reservoir suction screen						x			**Reservoir suction screen (35.300)**
Engine air filters				x					**Engine air filters (10.254)**
Every 3600 hours or two years									
Diesel Exhaust Fluid (DEF)/AdBlue® in-line filter				x					**Diesel Exhaust Fluid (DEF)/AdBlue® in-line filter (10.500)**
As required									
Track tension	x								**Track tension (48.134)**

Maintenance action	Check	Grease	Drain fluid	Replace		Change fluid	Cleaning	Lubricate	Page no.
Roll Over Protective Structure (ROPS)	x								**Roll Over Protective Structure (ROPS) (90.114)**
Cab air filter - Recirculation filter				x					**Cab air filter - Recirculation filter (10.254)**
Selective Catalytic Reduction (SCR) system - Replace supply module filter				x					**Selective Catalytic Reduction (SCR) system - Replace supply module filter (10.218)**
Selective Catalytic Reduction System (SCR) tank filter						x			**Selective Catalytic Reduction System (SCR) tank filter (10.500)**
Engine air filters				x					**Engine air filters (10.254)**
Doors and windows							x		**Doors and windows (90.150)**
Ripper shanks and teeth				x					**Ripper shanks and teeth (89.128)**
Battery service						x			**Battery service (55.302)**
Auxiliary battery connections	x								**Auxiliary battery connections (55.302)**
Battery removal and installation				x					**Battery removal and installation (55.000)**
Work lights				x					**Work lights (55.000)**
ELECTRICAL SYSTEM									
Fuses and relays				x					**Fuses and relays (55.100)**
Fuses and relays				x					**Fuses and relays (55.100)**

Basic instructions - Moving a disabled machine

1150M	NA

⚠ WARNING

Transport hazard!
Make sure that the weight of a trailed vehicle that is not equipped with brakes NEVER EXCEEDS the weight of the machine that is towing the vehicle. Stopping distance increases with increasing speed as the weight of the towed load increases, especially on hills and slopes.
Failure to comply could result in death or serious injury.

W1138A

Electronic override

1. Use the multi-function display screen to select the towing mode. From the main menu, scroll down and select “Service”. Press the enter switch.

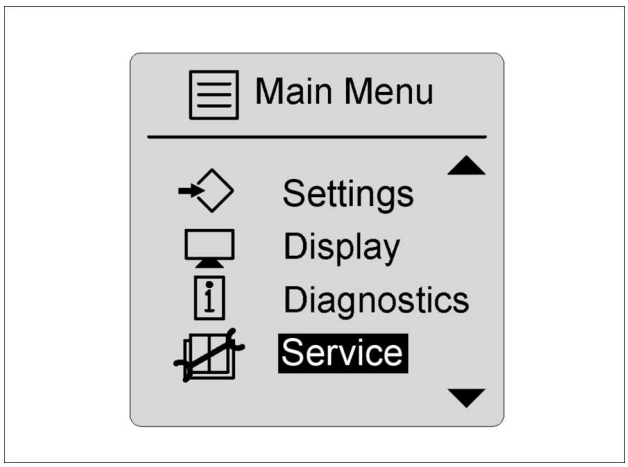

RAIL15DOZ0018AA 1

2. Scroll down, and highlight the “Tow Mode” selection. Press the enter switch.

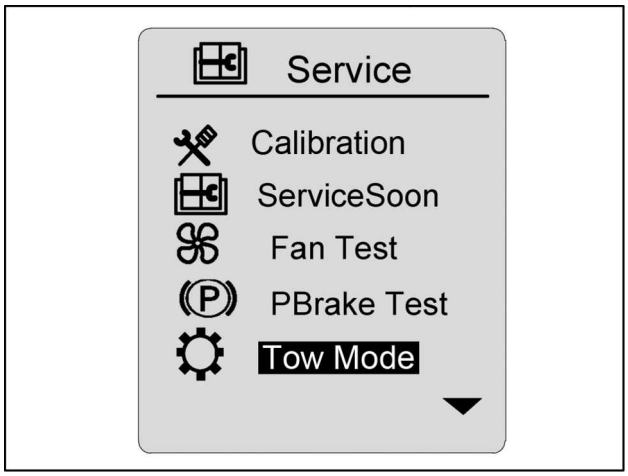

RAIL15DOZ0032AA 2

3. Change the Tow Mode from “Disabled” to “Enabled” by highlighting and pressing the enter switch.

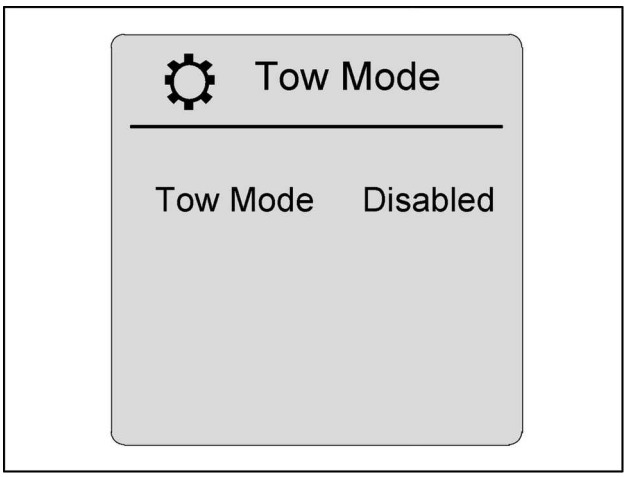

RAIL12DOZ0592AA 3

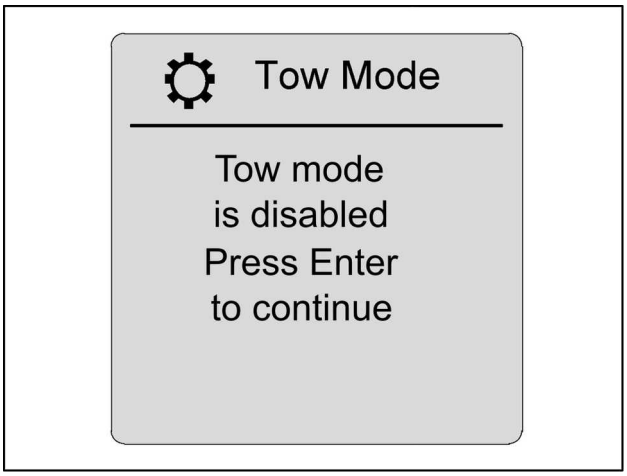

RAIL12DOZ0823AA 4

4. Continue to follow the screen prompts.

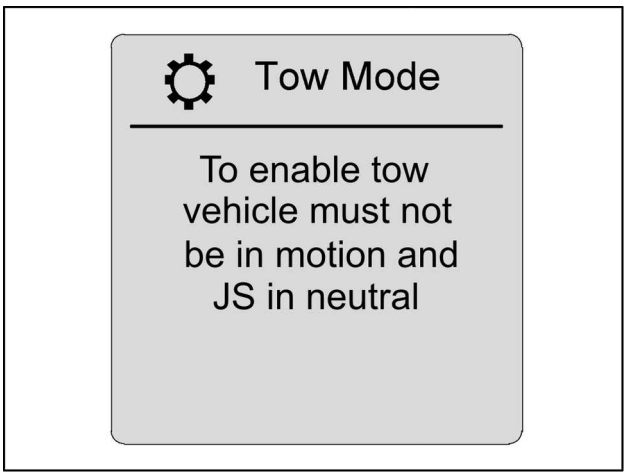

RAIL12DOZ0824AA 5

5. Read the procedure for releasing brakes later in this instruction.

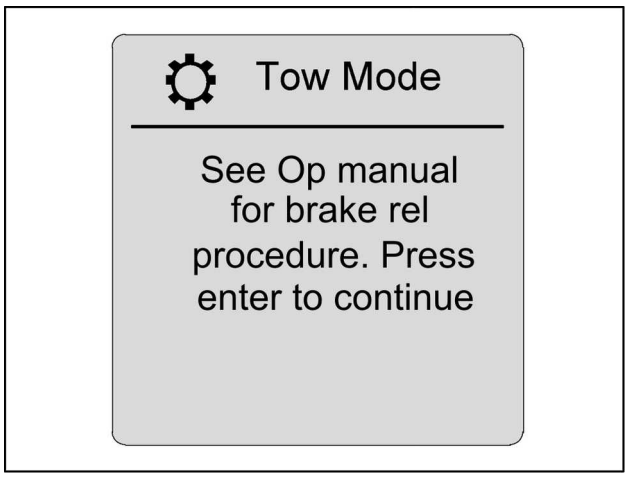

RAIL12DOZ0825AA 6

6. Press the enter switch to continue to the next screen.

NOTICE: *Do not tow the machine over* ***1.2 km/h*** *(****0.7 mph****).*

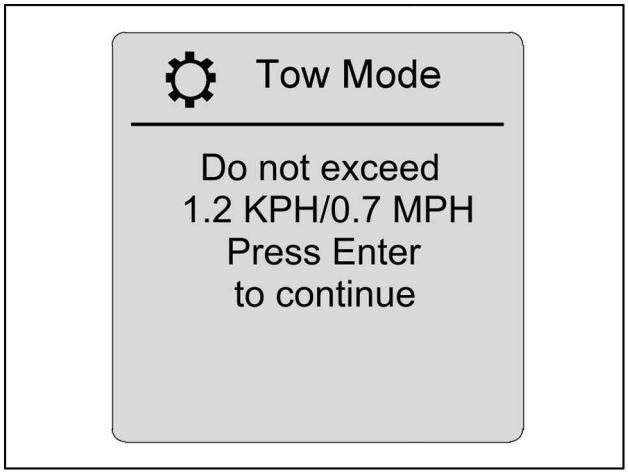

RAIL12DOZ0826AA 7

7. Press the enter switch to continue to the next screen.

NOTICE: *Tow the machine the shortest possible distance.*

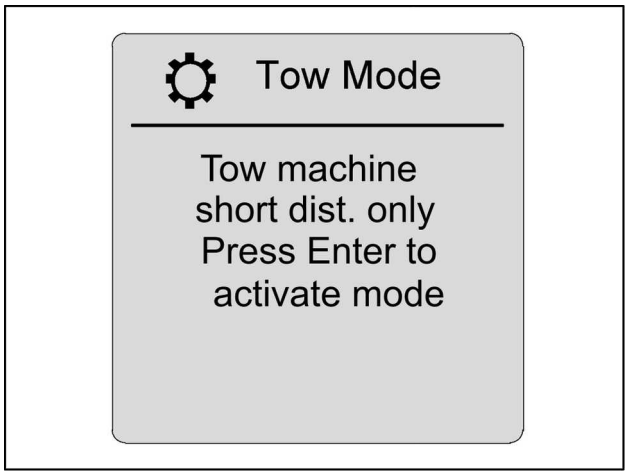

RAIL12DOZ0827AA 8

8. The tow mode will be enabled. Wait for the next screen prompt before you tow the machine.

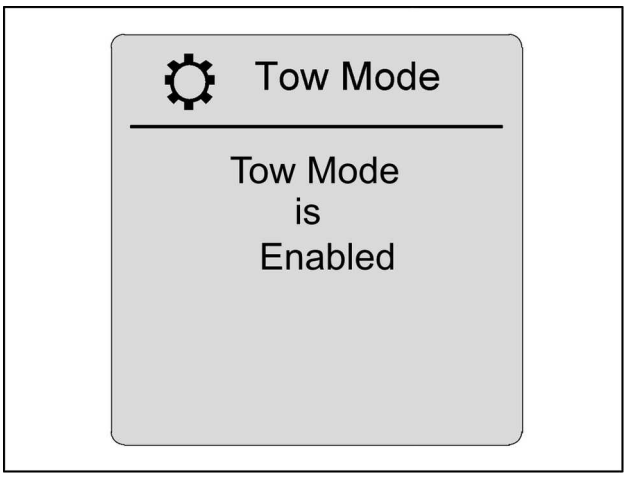

RAIL12DOZ0829AA 9

Bypass hydrostatic pumps

You must open the pressure relief valves in order to bypass the hydrostatic pumps. There are two valves located on each hydrostatic pump.

9. Access the upper pressure relief valve by removing the floor mat **(1)**, cab floor access panel, and tilting the operator seat back. The valves are located on the hydrostatic pumps beneath the cab floor.

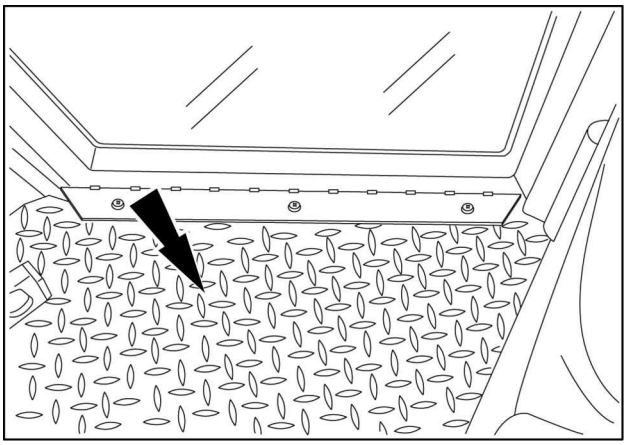

RAIL12DOZ0232AA 10

10. Open pressure relief valves to bypass the hydrostatic pumps (two right side valves **(1)** and two left side valves **(2)**. The pumps are tandem mounted and the valves can be found on each side of the pump.

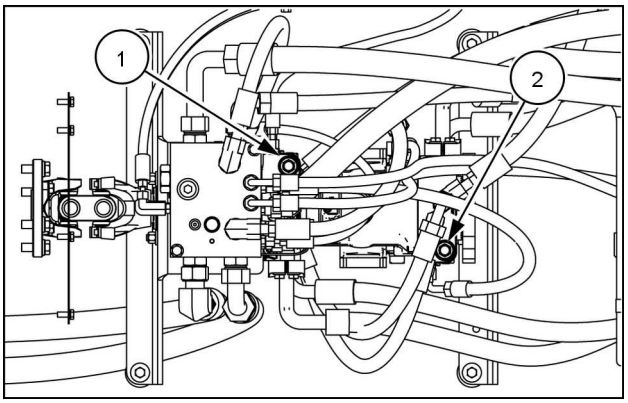

RAIL13DOZ1265AA 11

11. Remove the relief valve plastic caps (**(5)** to access the engagement screws **(6)**. The plastic caps will be unusable after removal and should be replaced.

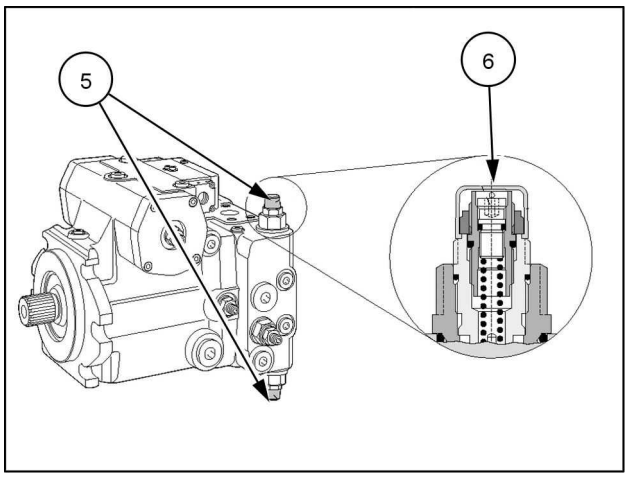

RAIL12DOZ0644AA 12

12. Use an Allen wrench, and turn the engagement screw **(6)** counterclockwise two turns on each relief valve.

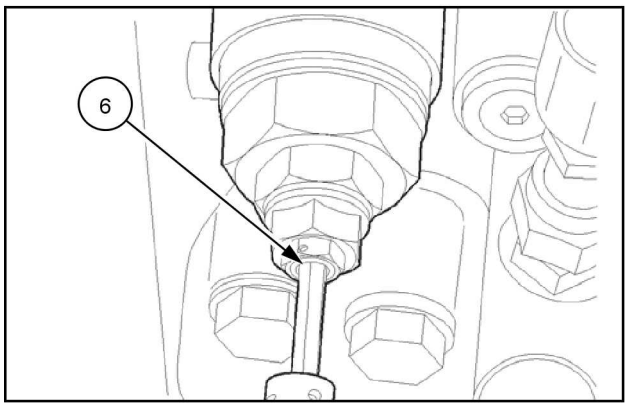

RCIL10CWL116AAL 13

Releasing the brakes

NOTE: *This machine is equipped with a spring applied hydraulically released parking brakes. Hydraulic pressure must release the brakes. You MUST use a hand pump to release the brakes when the engine is not running.*

13. Remove the hydraulic reservoir breather. Connect a vacuum pump at the hydraulic reservoir breather, and hold a vacuum to keep from losing fluid.

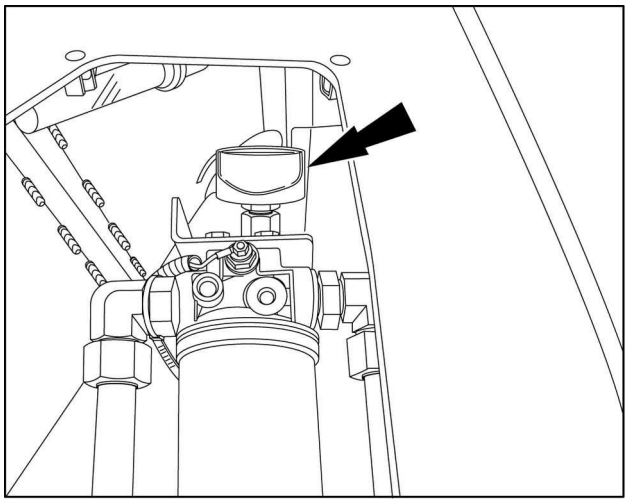

RAIL12DOZ0372AA 14

https://truckmanualshub.com/

14. Disconnect the fittings **(1)** at the brake lines and cap the fittings. There are two brake lines. A Tee fitting will be required for the two lines in order to connect to the hand pump. If a T-fitting is not available, two pumps must be used.

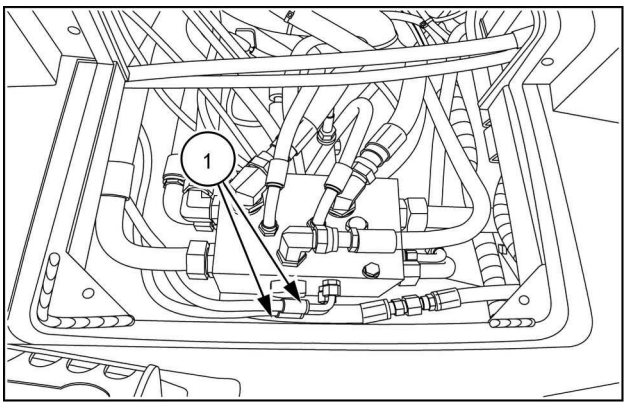

RAPH12DOZ0094AA 15

15. Connect a hand pump with the capacity to reach and maintain **22.7 bar** (**330 psi**).
16. Operate the pump until the correct pressure is reached, and the brakes are released.
17. Check and maintain **22.7 bar** (**330 psi**) minimum in the brake line when moving the machine. Damage to the brake system can result if the pressure is reduced.
18. Tow the machine the shortest possible distance. Do not tow the machine over **1.2 km/h** (**0.7 mph**).

Returning the unit to service

1. Disconnect the hand pump from the brake lines.
2. Remove the plugs, and reconnect the lines **(1)** to the brake solenoid.

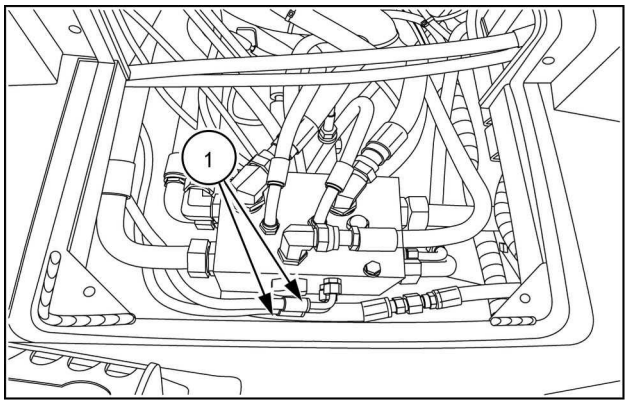

RAPH12DOZ0094AA 16

3. Remove the vacuum pump and install the hydraulic reservoir breather.

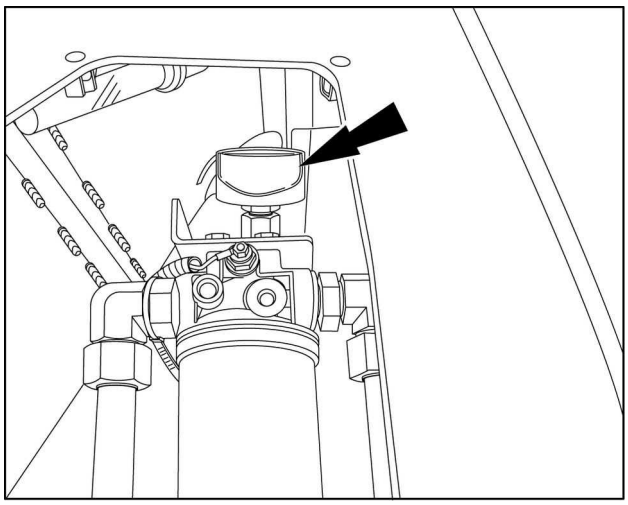

RAIL12DOZ0372AA 17

4. Turn the engagement screws clockwise two turns on each relief valve.

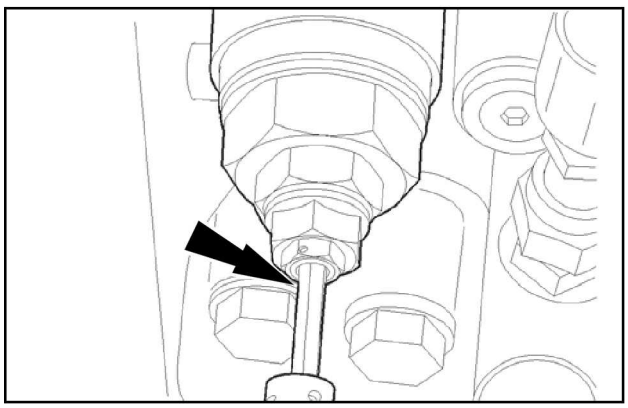

RCIL10CWL116AAL 18

5. Install new plastic caps on each relief valve.
6. Reinstall the floor access panel.

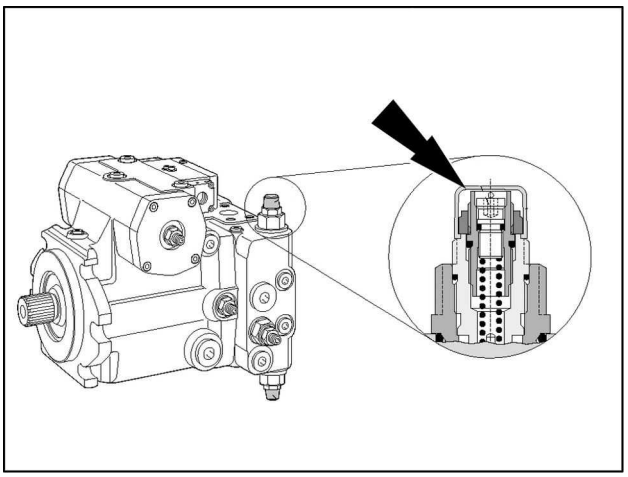

RAIL12DOZ0644AA 19

7. On the multi-function display screen, select “Service” and press the enter switch.

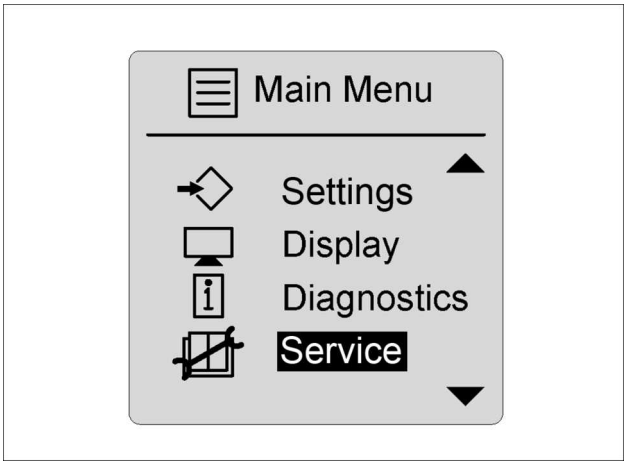

RAIL15DOZ0018AA 20

8. Scroll down, and highlight the “Tow Mode” selection and press the enter switch.

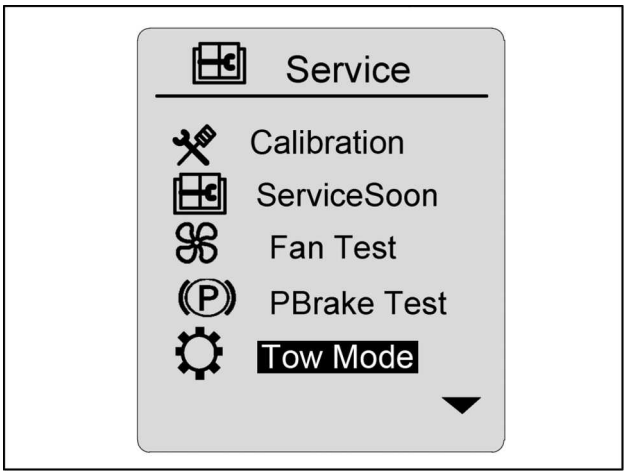

RAIL15DOZ0032AA 21

https://truckmanualshub.com/

This as a preview PDF file from **best-manuals.com**

Best Manuals

Download full PDF manual at **best-manuals.com**