https://truckmanualshub.com/

(Original instructions)

EN

operating instructions

mini-excavator 17VXE

serial numbers from n°:
EG17*0001

CE **03/13 - R01**
code. 2030807104

This manual is used for both the electric and diesel excavators-- Parts for the electric machine are custom built. Please contact Compact Excavator Sales LLC for these parts.

IHIMER | a joint venture IHI GROUP

ihimer.com

https://truckmanualshub.com/

https://truckmanualshub.com/

1) **DECLARATION OF CONFORMITY (ORIGINAL)**
(Directive 2006/42/EC , Annex II, 1A)

2) Manufacture: **IHIMER** S.p.A.

3) Address: località CUSONA - 53037 SAN GIMIGNANO (SI) - ITALY

4) Technical file compiled by: **IHIMER** S.p.A. Technical department manager

5) Address: località CUSONA - 53037 SAN GIMIGNANO (SI) - ITALY

6) Hereby we declare that the machine category:
EARTH-MOVING MACHINERY / HYDRAULIC EXCAVATOR

7) Type: 17VXE

8) Serial number : EG_____

9) Net power installed (kW/rpm) : 10.5 / 2300

10) Is in conformity with the provisions of the <<Machinery Directive>> **2006/42/EC**, as amended and the regulations transposing it into national law;

11) Also complies with the provisions "noise emission in the environment by equipment for use outdoors" directive 2000/14/EC amended by 2005/88/EC and the regulations transposing it into national law
- Machine category: Hydraulic excavator *annex I n°20*
- Conformity assessment procedure followed: *internal control of production with assessment of technical documentation and periodical checking, annex VI. (1st procedure)*
- The notified body : *ECO S.p.A. – via Mengolina, 33 – 48018 Faenza (RA) – Italy*
- Measured sound power level: **L_{WA} 91 dB**
- Guaranteed sound power level: **L_{WA} 92 dB**

12) The following respective requirements fulfil: 2004/108/ EC (2004)

13) Harmonised EN-standards taken: EN ISO 12100-1 (2003)+A1:2009;
EN ISO 12100-2 (2003)+A1:2009; EN ISO 3744 (2009); EN 474 -1 (2006) +A1:2009;
EN 474 -5 (2006) +A1:2009

14) Place / Date: San Gimignano / …... - ……

……

15) Name :

16) Position: President of IHIMER S.p.A.

FAC SIMILE

https://truckmanualshub.com/

ITALIAN (Traduzione)

1) DICHIARAZIONE "CE" DI CONFORMITÁ
(Direttiva 2006/42/CE,allegato II, 1A)
2) Fabbricante:
3) Indirizzo:
4) File tecnico compilato da: IHIMER S.p.A.
5) Indirizzo:
6) Dichiara che la macchina categoria: escavatore idraulico
7) Tipo :
8) Numero di serie:
9) Potenza netta installata:
10) È conforme ai requisiti della Direttiva Macchine 2006/42/CE, come modificata e alla legislazione nazionale che la traspone:
11) È conforme alle condizioni della Direttiva 2000/14/CE modificata dalla 2005/88/CE "emissione acustica ambientale delle macchine ed attrezzature destinate a funzionare all'aperto" e alla legislazione nazionale che la traspone.
- Categoria macchina: escavatore idraulico, allegato I n°20
- Procedure applicate per le valutazioni di conformità: *controllo interno della produzione con valutazione della documentazione tecnica e controlli periodici, all. VI. (proc.1)*
- Ente notificato:
- Livello di potenza sonora misurato:
- Livello di potenza sonora garantito:
12) È conforme alle condizioni della seguente direttiva:
13) Sono state applicate le seguenti norme armonizzate:
14) Luogo / Data:
15) Nome:
16) Posizione:

FRENCH (Traduction)

1) DECLARATION « CE » DE CONFORMITE
(Directive 2006/42/CE, annexe II , 1A)
2) Nom du constructeur:
3) Adresse:
4) Fichier technique rédigé par: IHIMER S.p.A.
5) Adresse:
6) Déclare que la machine décrite ci-dessous désignée: pelle
7) Type du materiel:
8) Numéro de série:
9) Puissance net installée:
10) Est conforme aux dispositions de la directive «machines » 2006/42/CE modifiée et aux législations nationales la transposant :
11) Est également conforme aux dispositions de la directive « émissions sonores des équipements utilisés à l'extérieur des bâtiments » 2000/14/CE modifiée par la directive 2005/88/CE et aux législations nationales la transposant.
- Machine : pelle, annexe I n°20
- Procédure appliquée pour l'évaluation de la conformité :*procédure de contrôle interne de la production, avec l'évaluation de la documentation technique et contrôle périodique, annex VI.*
- Organisme notifié :
- Niveau de puissance acoustique mesuré :
- Niveau de puissance acoustique garanti :
12) Est égalment conforme aux dispositions de la directive suivantes :
13) Est conforme aux normes harmonisées suivantes:
14) Adresse / Date :
15) Signataire :
16) Qualite du signataire :

SPANISH (Traducciòn)

1) DECLARACION "CE" DE CONFORMIDAD
(Directriz 2006/42/CE, anexo II, 1A)
2) Fabricante:
4) Direccion:
5) Archivo técnico compilado por: IHIMER S.p.A.
6) Direccion:
7) Con el presente documento declaramos que la maquina categoria: excavadora
8) Tipo:
9) Numero de serie:
10) Potencia neta instalada:
11) Cumple la Directriz Maquinas 2006/42/CE, incluidas les modificationes de la misma:
12) Cumple la Directriz 2000/14/CE enmendada por la 2005/88/CE sobre "emisiones sonoras en el entorno debidas a las máquinas de uso al aire libre" incluidas las modificaciones de la misma:
- Categoria maquina: excavadora, anexo I n°20
- Procedimiento de evaluación de la conformidad que se ha seguido: *control de la producción con evaluación de la documentación técnica y comprobaciones periódicas, anexo VI.*
- Organismo notificado:
- Nivel de potencia acústica medido:
- Nivel de potencia acústica garantizado:
13) Satisfacen la siguente directriz:
14) Cumplen les normas armonizadas:
15) Direccion / Data:
16) Nombre:
17) Puesto:

GERMAN (Ubersetzung)

1) EG-KONFORMITÄTSERKLÄRUNG
(Direktive 2006/42/EG, Nachtrag II, 1A)
2) Hersteller:
3) Adresse:
4) Technische Datei erstellt von: IHIMER S.p.A.
5) Adresse:
6) Erklärt hiermit, dass die Maschine-Kategorie : bagger
7) Typ :
8) Seriennummer:
9) Installierte Nutzleitung
10) Konform ist mit den einschlägigen Bestimmungen der EG-Maschinenrichtlinie (EG-Richtlinie 2006/42/EG) inklusive deren Änderungen, und der nationalen Gesetzgebung welch diese Bestimmungen umsetzt:
11) Konform ist mit den Bedingungen der EG-Richtlinie 2000/14/EG geändert durch 2005/88/EG über «umweltbelastende Geräuschemissionen von zur Verwendung im Freien vorgesehenen Geräten und Maschinen», inklusive deren Änderungen.
- Maschine-Kategorie : Bagger, Nachtrag I n°20
- Angewandtes Konformitätsbewertungsverfahren : *interne fertigungskontrolle mit begutachtung der technischen unterlagen und regelmässiger prüfung, Anhang VI.*
- Der beteiligten benannten Stelle :
- Gemessener Schalleistungspegel :
- Garantiertter Schalleistungspegel :
12) Konform ist mit den folgenden Bedingungen der EG-Richtlinie :
13) Folgende harmonisierte Normen zur Anwendung gelangen:
14) Adresse / Datum :
15) Name :
16) Position:

DUTCH (Vertaling)

1) EG-VERKLARING VAN OVEREENSTEMMING
(EG-Richtljn 2006/42/EG, Anhang II, 1 A)
2) Fabrikant:
3) Adres:
4) Technisch bestand opgesteld door: IHIMER S.p.A.
5) Adres:
6) Hierbij werklaren wij dat onderstaande machines categorie: graafmachine
7) Type:
8) Serie Nummer:
9) Netto geinstalleerd vermogen:
10) Overeenstemmen met de gewijzigde richtlijn EG-Richtlinie 2006/42/EG en de naar nationale wetgeving transponerende regelingen.
11) Voldoest bovendien aan de bepalingen van de richtlijn 2000/14/EG, gewijzigd door 2005/88/EG, Geluidsemissein het milieu door materieel voor gebruik buitenshuis" en de naar nationale wetgeving transponerende regelingen.
- Machine categorie: graafmachine, Anhang I n°20
- Overeenstemmingsbeoordelingsprocedure: *interne controle van productie met beoordeling van technische documentatie en periodieke keuring, bijlage VI.*
- Betrokken aangemelde instantie:
- Gemeten geluidsvermogensniveau:
- Gewaarborgd geluidsvermogensniveau:
12) De volgende respectievelijke eisen voldoen:
13) Geharmoniseerde EN-Standaarden:
14) Adres / Datum:
15) Naam:
16) Functie:

DANISH (Oversættelse)

1) OVERENSSTEMMELSES ERKL RING
(Direktiv 2006/42/EC, annex II, 1A)
2) Produktion:
3) Adresse:
4) Teknisk fil kompileret af: IHIMER S.p.A.
5) Adresse:
6) Vierkel re herved at maskinen kategori: gravemaskine
7) Type:
8) Serie nummer:
9) Netto Ydelse:
10) Er i overensstemmelse med Direktiv 2006/42/EC, som tilrettet
11) Opfylder bestemmelser med seneste andringer for « stojudslip i miljoet for undendors udstyr » direktiv 2000/14/EC tilrettet med 2005/88/EC og reguleringer omsat til national lov :
-Maskinen kategori: gravemaskine, annex I n°20
-Procedure ansogt for opfyldelse af regler vedrorende : *intern kontrol af produktion med fastsattelse af teknisk dokumentation og periodisk kontrol, annex VI.*
-Anmeldt til :
-Malt stojnivot :
-Garanteret stojnivot :
12) Folgende respektive krav opfylder
13) Harmoniseret EN-standard er opfyldt
14) Adresse / Dato
15) Navn:
16) Stilling:

IHIMER S.p.A.
Loc. Cusona 53037 San Gimignano (SI) ITALY
Tel. +39 057795121 Fax +39 0577982400

https://truckmanualshub.com/

FOREWORD

This manual contains safety, operation, maintenance, and adjustment information. The procedures are designed to provide the best performance of the machine in an effective and economical way. In order to obtain it, remember the next basic rules.

- This manual should be stored in the operator's compartment in the literature holder or seat back literature storage area.

- Before inspection, maintenance or operating the machine, read and understand this manual completely.

- Since all of the explanations in this manual may not be thoroughly understood at first, repeat reading it until abilities as an operator are obtained and developed for proper operation.

- Further abilities as an operator outside of descriptions in this manual can be obtained from the experience during normal operations and under proper supervision.

- The illustrations in this manual are used first of all to let you pay attention. They do not show all of illustrations in this manual. Because of continuing improvement and advancement of product design, the shape of machine in the illustrations may be partly different from your machine. Please understand it. Whenever a question arises regarding your machine, or this publication, please consult your local **IHIMER** distributor for the latest available information.

https://truckmanualshub.com/

CONTENTS

		Page
FOREWORD		0 – 1
CONTENTS		0 – 2
SAFETY INFORMATION		0 – 4
1. SAFETY		
1 – 1	General	1 – 1
1 – 2	Mounting and Dismounting	1 – 5
1 – 3	Before Starting the Engine	1 – 6
1 – 5	Before operating the Machine	1 – 7
1 – 6	Operating the Machine	1 – 8
1 – 7	Safe Travel	1 – 22
1 – 8	Towing	1 – 25
1 – 9	Safe Transportation	1 – 26
1 – 10	Parking the Machine	1 – 27
1 – 11	Safe Maintenance	1 – 28
1 – 12	Warning Signals and Labels	1 – 33
2. OPERATION		
2 – 1	Nomenclature	2 – 1
2 – 2	Controls and Instruments	2 – 2
2 – 3	Before Starting the Engine	2 – 12
2 – 8	Backhoe Operation	2 – 16
2 – 9	Operating the Special Attachments and Actuators	2 – 20
2 – 10	Traveling the Machine	2 – 22
2 – 11	Crawler Extention / Retraction	2 – 26
2 – 12	Towing	2 – 27
2 – 13	Lifting the Machine	2 – 28
2 – 14	Loading and Unloading the Machine	2 – 29
2 – 15	Precaution on Use of Rubber Truck Shoe	2 – 30
2 – 16	Boom lowering with the engine stopped	2 – 31
2 – 17	Parking the Machine	2 – 32
2 – 18	Emergency Engine Stop	2 – 32

https://truckmanualshub.com/

3. MAINTENANCE

		Page
	Maintenance Intervals	3 – 1
3 – 1	Lubrication Chart Maintenance and Checks	3 – 2
3 – 2	Recommended Lubrication Table	3 – 3
3 – 3	When Required Maintenance and Checks	3 – 4
3 – 4	Daily Maintenance and Checks	3 – 9
3 – 5	50 hours Maintenance and Checks	3 – 13
3 – 6	250 hours Maintenance and Checks	3 – 14
3 – 7	500 hours Maintenance and Checks	3 – 20
3 – 8	1000 hours Maintenance and Checks	3 – 24
3 – 9	2 years Maintenance and Checks	3 – 27
3 – 10	Unusual Operating Conditions	3 – 29
3 – 11	Long Term Storage	3 – 32

4. TROUBLE SHOOTING

4 – 1	Trouble and Remedy	4 – 1

5. HYDRAULIC SYSTEM DIAGRAM

5 – 1	Hydraulic System Diagram	5 – 1

6. ELECTRICAL SYSTEM DIAGRAM

6 – 1	Electrical Wiring System Diagram	6 – 1

7. SPECIFICATIONS

7 – 1	General Specifications	7 – 1
7 – 2	Overall Dimensions	7 – 3
7 – 3	Working Range	7 – 4
7 – 4	Working Range (BACK HOE)	7 – 5
7 – 5	Rated Object Handling Capacities Table	7 – 6

https://truckmanualshub.com/

SAFETY INFORMATION

We offer you basic and important rules and precautions for safe operations.

Read, understand, and observe them before starting operation. This is the most essential way to prevent accidents.
Wrong operation, inspection, or maintenance can cause personal injury or death.

Throughout this manual and on the machine, precautions are provided with ⚠ marks and classified by the words **“DANGER”, ‘’WARNING”,** and **“CAUTION”** according to their extent of danger.
The classification is as follows :

⚠ DANGER indicates an imminently hazardous situation which, if not avoided, will result in death or serious injury.

⚠ WARNING indicates a potentially hazardous situation which, if not avoided, could result in death or serious injury.

⚠ CAUTION indicates a potentially hazardous situation which, if not avoided, could result in minor or moderate injury. It may also be used to alert against possible damage to the machine and its components.

We have made every effort for you to prevent accidents during operation, however, we cannot be held responsible for predicting every kind of danger in all operating conditions. It is the owner or user of the machine who is responsible for **ALWAYS** paying attention to operate the machine; as well as reading and understanding this manual enough to obtain the essential knowledge and skills fundamental to correct machine operation.

⚠ WARNING

- **BEFORE** inspection, operation, or maintenance of the machine, be sure to read and understand this manual.
- Incorrect operation or maintenance of the machine can cause the accident and serious injury or death.
- Keep this manual on hand during operation so that you can immediately consult it when necessary. If it should be missing or damaged, place an order from **IHI** distributor for a replacement.
- There are various kinds of federal, state, and local regulations that effect construction and industrial machinery. Since the regulations are subject to change, and differ from one locale to another, it is impossible for us to provide such information in this manual.
  It is the responsibility of the owner or user to be familiar with the regulations.
- Specifications and materials of the machine are subject to change without any obligation on the part of the manufacturer.

https://truckmanualshub.com/

1 SAFETY

SAFETY TIPS

This section explains safety tips which you will find throughout this manual and on the machine.
Periodically check labels and plates containing those tips for damage.
If they are damaged, clean or replace them.
For replacement, contact your local **IHIMER** dealer with their Parts Numbers in the Parts Catalogue.

Remember that the safety tips that we provide cannot cover every kind of danger that you may encounter during operation.

1-1 GENERAL

OBSERVE THE BASICS FOR SAFE AND EFFECTIVE OPERATION.

The operator's knowledge, skills, and experience are the most important to utilize the machine. Therefore, be sure to understand operation procedures and to take necessary training.

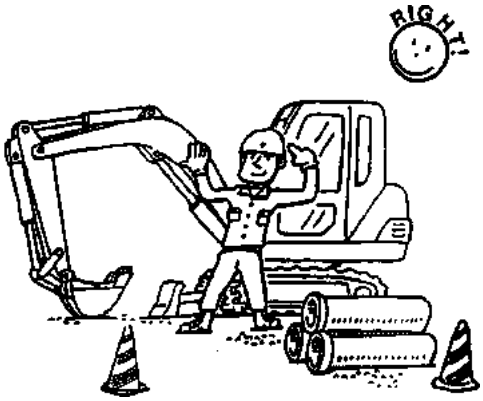

OPERATOR SHOULD BE QUALIFIED.

Only qualified operators should be authorized to operate the machine, and those so authorized should do so only when physically and mentally alert.
The operator should be to be familiar with the hazards and necessary safety measures unique to the operation of hydraulic excavators.

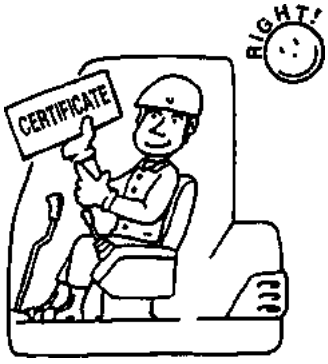

https://truckmanualshub.com/

1 SAFETY

READ AND UNDERSTAND THE INSTRUCTIONS AND WARNINGS.

This manual. plates, and labels on the machine contain necessary instructions and warnings for safe operation. You are supposed to read and understand them first. If you should ignore them, injury or death may occur. Do not leave what you do not understand as it is. Your **IHIMER** distributor is glad to answer any question.
If the manual, plate, or label is missing or damaged, contact **IHIMER** distributor for replacement.

OPERATOR SHOULD BE IN GOOD HEALTH.

Operator should be physically and mentally alert, which is one of the best insurance against an accident.

NEVER operate the machine under the influence of alcohol. medication, or intoxication.

WEAR PROPER WORKING CLOTHES.

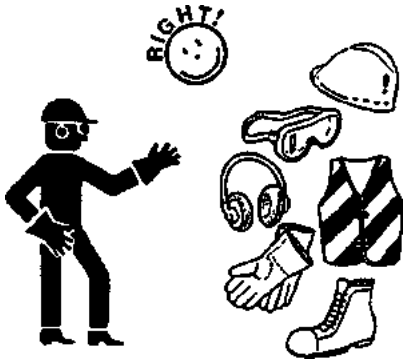

Wear working clothes that closely fit operators. Avoid loose jackets, shirt sleeves, rings, and other jewelry which may be caught in moving parts. Avoid also oil stained or damaged garments. Shoes should be clear of grease or mud before operation.
Always wear required protective items such as hard hats, safety glasses. reflective clothing. safety shoes, and ear protection as required,

https://truckmanualshub.com/

PERFORM "WALK-AROUND" INSPECTION.

Walk around the machine to check safety guards, plates. and other related parts are set in place. Do not attempt to operate the machine when any unsafe condition is detected.

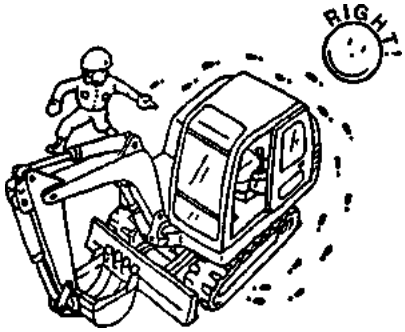

NEVER ASSUME ANYTHING GUARANTEED.

Never assume that everything is all right at the start of a work day just because it seemed satisfactory at the end of the previous work day. Before beginning each days operation, thoroughly inspect the entire excavator for signs of vandalism.

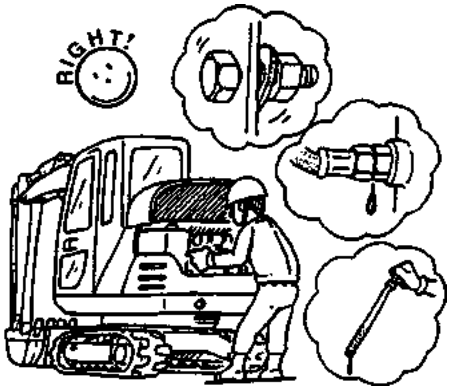

MAKE A WORK PLAN.

Prior to operation, investigate your job site sufficiently. When any obstruction or hazards are detected, mark it so that all personnel are aware of it. Avoid any oversight that may cause serious accident.
Observe a local weather forecast and discuss well work procedures and let all personnel know them without exception.

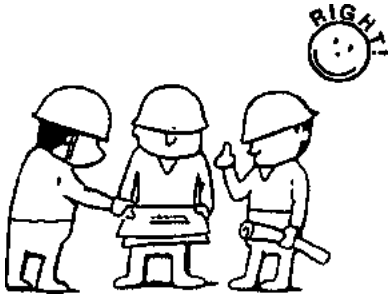

https://truckmanualshub.com/

WATCH FOR UNDERGROUND UTILTIES.

Mark the location of underground utilities such as gas lines, sewers, and power lines before any digging operations. If necessary, the utilities should be temporarily discontinued.

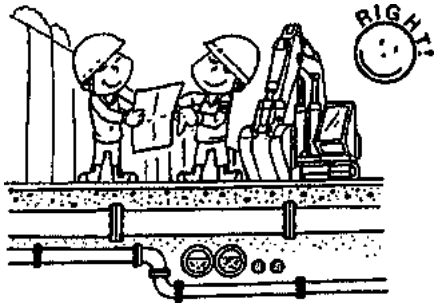

CHECK THE JOB SITE.

ALWAYS check the job site for grade and stability of the ground, ventilation, depth of water and ambient obstructions. Avoid operating your equipment too close to an overhang.

Since this machine is not provided with anti-explosion design, **NEVER** use it inside a tunnel or in explosive environment to avoid hazard caused by an explosion.

CLEAR ALL PERSONNEL FROM THE MACHINE AND AREA.

Be sure to barricade the job site to prevent entry of the unauthorized. Confirm that there is no one around the machine before starting the engine or operating the machine.

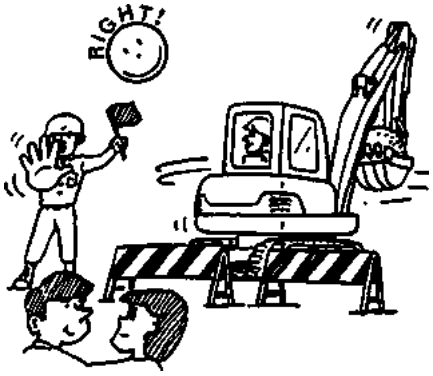

https://truckmanualshub.com/

MAINTAIN GOOD VENTILATION.

Take a countermeasure to Vent the exhaust gas to the outside to start and operate the engine, in a pit, tunnel, or trench. In such a place, the air trends to stagnate. It is very dangerous to inhale the exhaust gas.
Remember, exhaust gas can kill you.

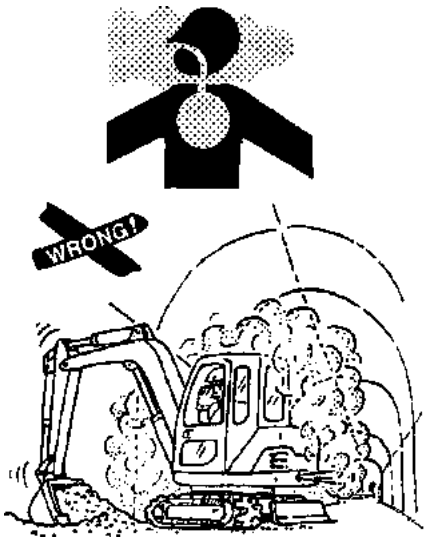

DO NOT MODIFY THE ROPS/TOPS.

Do not modify the **ROPS/TOPS** unless instructed to do so in installation instructions. Modifications such as welding, drilling or cutting can weaken the structure and reduce the protection it provides. A damaged **ROPS/TOPS** can not be repaired – it must be replaced.

1-2 MOUNTING AND DISMOUNTING

CAREFULLY MOUNT AND DISMOUNT THE MACHINE.

ALWAYS use steps and handholds to mount and dismount the machine.
Hold the handholds with both hands and face the machine keeping a contact with at least three points of the steps and handrails.

NEVER hold control levers at mounting and dismounting.

NEVER not try to mount or dismount the moving machine.

NEVER jump off the machine.

Do not try to climb on or off the machine with implements or supplies in your hand.

https://truckmanualshub.com/

1-3 BEFORE STARTING THE ENGINE

FOLLOW THE NEXT PRECAUTIONS.

- Clear all personnel from the machine and the area.
- Move all control levers to the **NEUTRAL** position before starting the engine.
- Inspect the condition of the seat belt and mounting hardware. Replace any damaged or worn parts.
- Fasten the seat belt (if equipped) securely.
- Adjust the operator's seat to be able to depress the pedal completely.

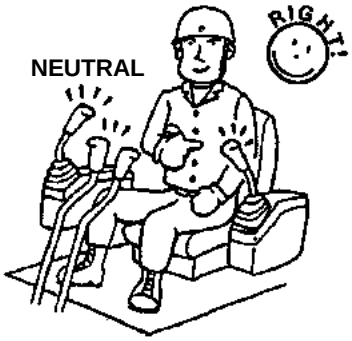

Fasten the seat belt.

Adjust the operator's seat

1-4 STARTING THE ENGINE

- **ALWAYS** start the engine only from the operator's seat following the starting procedure in this manual.
- When the start switch or controls are tagged with **"Do Not Operate",** do not start the engine or move any of the controls.
- **NEVER** short across the starter terminals or across the battery.

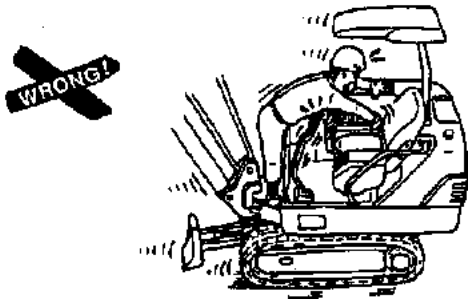

https://truckmanualshub.com/

1-5 BEFORE OPERATING THE MACHINE

FOLLOW THE NEXT PRECAUTIONS RIGHT AFTER STARTING THE ENGINE.

- Clear all personnel from the machine and the area.
- Make sure the machine horn and all other warning device are working properly.
- Be sure all Windows are clean.
- Check for proper operation of all controls and protective devices while moving slowly in an open area.
- When any defect is detected, immediately report it.

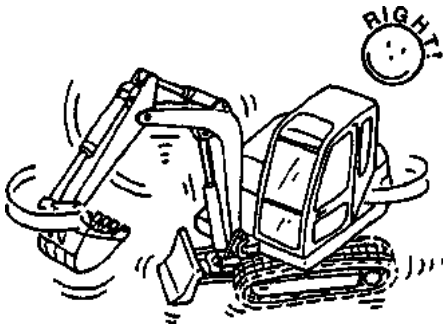

CONDUCT WARM-UP BEFORE OPERATION.

It is **ESSENTIAL** to conduct warm-up operation after starting the engine in order to run the hydraulic fluid smoothly.

The pumps may squeak because of the cold and thick hydraulic fluid, which results in the damage to the pumps.
ALWAYS take a time to warm up the fluid with running the engine at a low speed to maintain the **FREE FLOW OF OIL.**

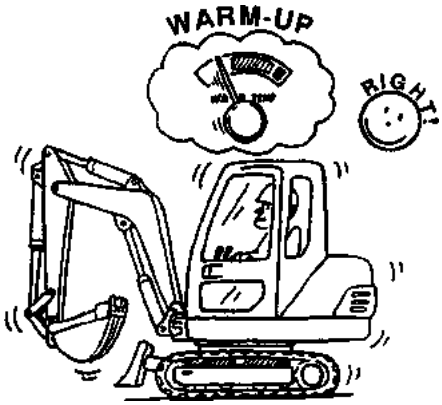

BE SURE TO LOCK DOORS AND OTHERS.

Be sure to lock doors, front windows, and lids before starting operation.
Operating with unlocked doors may cause personal injury.

Crushing of finger or hands.

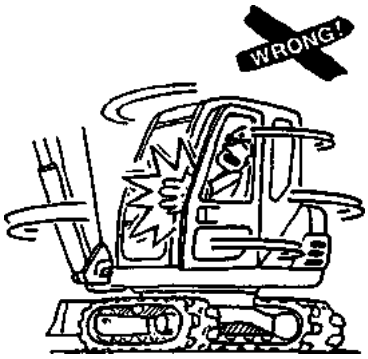

https://truckmanualshub.com/

1-6 OPERATING THE MACHINE

KEEP EACH OPERATION SECURED FOR SAFETY.

Conduct every operation with great care for safety. If you operate the machine roughly, It may cause damage to the machine, degrade the machine performance, and result in serious accidents.

OPERATE CONTROL LEVERS IN A WISE WAY.

Do not get angry with the control levers when you cannot operate the machine as desired. It may degrade the machine performance and damage the machine instead of improving the situation.
ALWAYS consider the machine capacity and take a time to clear problems in the best way.

OBSERVE THE NEXT PRECAUTIONS FOR SAFE OPERATION.

- Do not read.
- Do not drink.
- Do not eat.
- Do not be distracted. If you have to divert yourself from the machine operation, stop the operation first.

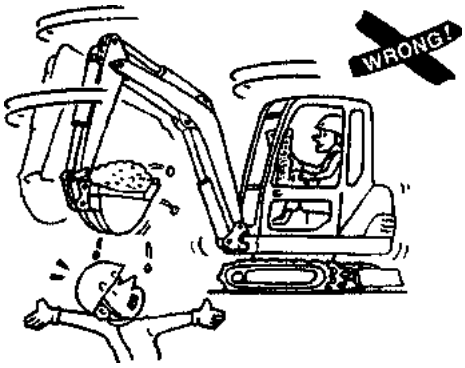

ALWAYS OPERATE THE MACHINE ONLY FROM THE OPERATOR'S SEAT.

NEVER attempt to operate the excavator from any position except the operator's seat. If you operate the machine from any other position, such as standing by the window or door, you may operate the machine inaccurately, which can cause serious injury. Remember that you should not get on or get off the moving machine to be seated or to leave the machine.

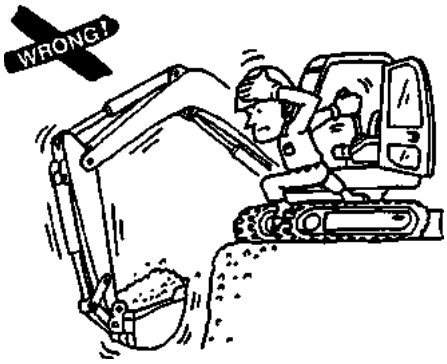

https://truckmanualshub.com/

WATCH FOR OVERHEAD WIRES.

Care must be taken that the boom does not contact, or even close to, overhead wires.

Know the maximum height and around of the machine. When working near overhead electrical lines, keep a distance of at least 10 feet (3 m) plus an additional 4 inches (100 mm) for each 1 , 000 volts over 50.000 volts. Check for local and state codes, which may require a greater distance for safety. Treat all lines as energized.

DANGER

DEATH OR INJURY MAY RESULT FROM CONTACTING ELECTRIC LINES.

ALWAYS CONTACT THE ELECTRIC POWER LINE OWNER. THE ELECTRIC POWER SHALL BE DISCONNECTED OR THE POWER LINES MOVED OR INSULATED BEFORE MACHINE OPERATIONS BEGIN.

NEVER OPERATE THIS MACHINE WITHIN 10FEET(3m) OF ELECTRIC POWER LINES.

NEVER LEAVE LOAD SUSPENDED IN THE AIR.

NEVER leave the load suspended in mid air, when the machine is out of service, or you have to leave the machine. **ALWAYS** put down the bucket or load onto the ground. Should a malfunction occur, it could fall, striking equipment or personnel.

⚠ DANGER

Should contact occur, stay on the machine until the boom is cleared or until the current is turned off. Keep all personnel off the machine. If you must leave the machine, **JUMP, DO NOT STEP OFF.**

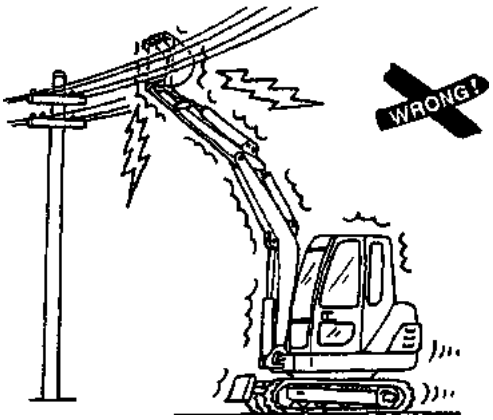

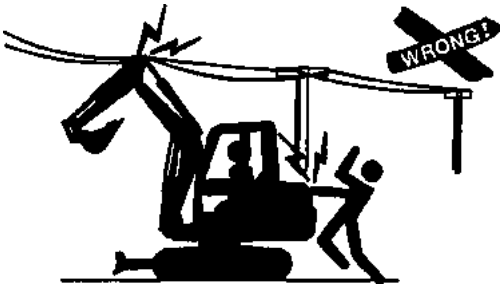

Electrical shock / erectrocution

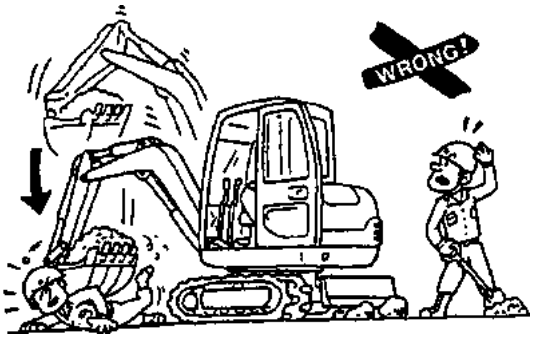

https://truckmanualshub.com/

NEVER ALLOW ANYONE TO RIDE THE ATTACHMENT OR THE LOAD.

NEVER attempt to lift personnel using the attachment since the machine is designed to excavate and move **NOT** personnel **BUT** materials. If you lose control of the attachment in such a trial, the personnel will be dropped down, which is likely to occur.
NEVER LIFT, SWING, OR LOWER A LOAD OVER ANYONE OR ALLOW AJNYONE TO RIDE TEE ATTACEMENT OR THE LOAD.

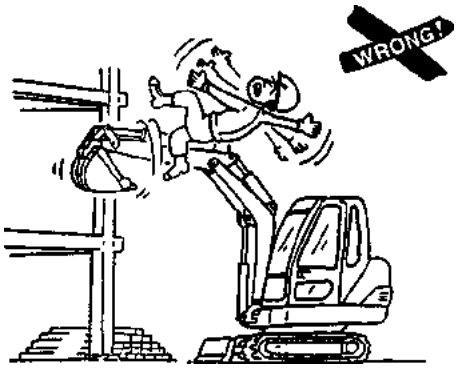

PROVIDE ADEQUATE TAILSWING CLEARANCE.

Confirm that there is a sufficient clearance around the machine for swinging operation.
The operator tends to be unconscious of the area behind the machine. Before tailswing, make sure that there no personnel or objects in such area.

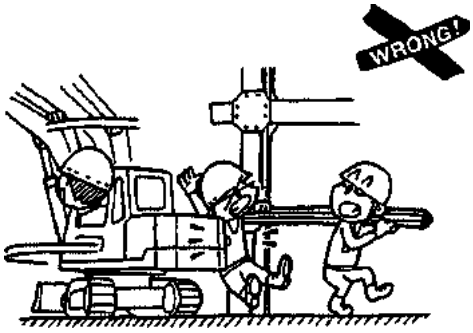

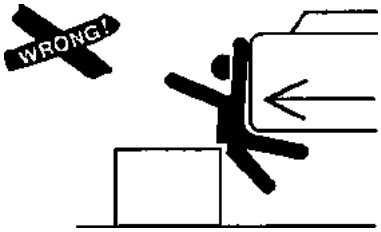

CAUTION

ALWAYS check for personnel or objects around the machine before swinging.

NEVER SWING OVER PERSONNEL

Be sure that no personnel are working around the machine before swinging.
Pay attention to invisible workers in a trench or pit in particular. Follow the signal person's direction not to swing over such workers.

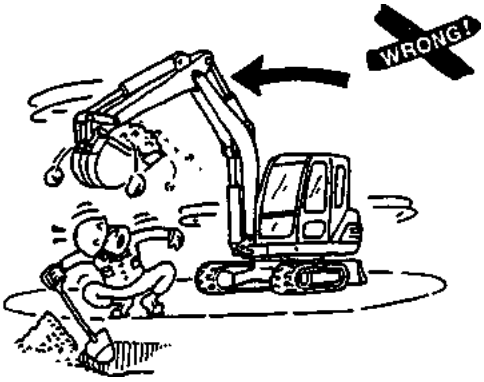

https://truckmanualshub.com/

CAREFULLY TRUCK LOADING

Load the truck from the rear whenever possible. **NEVER** swing the load over the truck cab. **"High altitude"** dumping into the truck is a dangerous practice. Use the bucket wrist action for precise dumping.

NEVER dump over truck cab. **ALWAYS** be sure truck driver is **OUT OF TRUCK CAB** and clear of the dumping bed when lifting.

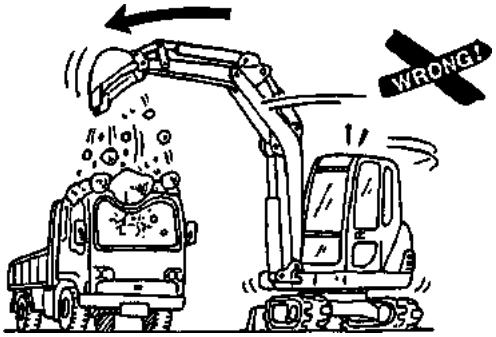

ALWAYS OBSERVE THE BUCKET AND LOAD.

ALWAYS watch the moving bucket or load carefully. Moving bucket or load without care may cause injury to personnel or materials. If you have to look away from it, stop the machine.

NEVER CAUSE PHYSICAL SHOCK TO HYDRAULIC CYLINDERS.

Be careful to protect the cylinder from any damage during operation. The hydraulic cylinder is not immune to physical shock. If the cylinder is collided or bumped, it may be distorted.

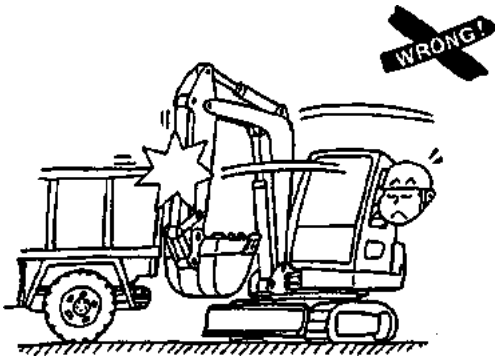

https://truckmanualshub.com/

TAKE SIGNALS FROM ONE SIGNAL PERSON EXCLUSIVELY.

use only signals which are predetermined and common to all personnel. Only one signal person should exclusively direct and give signals to personnel

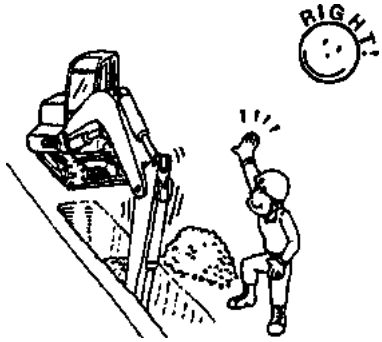

NEVER ALLOW PERSONNEL RIDE ON THE MACHINE OTHER THAN OPERATOR.

Only operator is authorized to be on the machine during operation.
Never let unauthorized personnel ride on the machine.

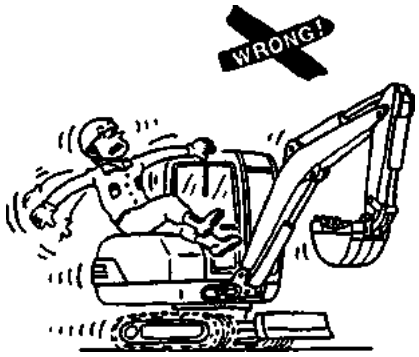

CAREFULLY OPERATE THE BUCKET.

Slow down the operation when controlling the bucket or moving the filled bucket close to the operator's cab in particular. which prevents the load from being dropped into the cab.

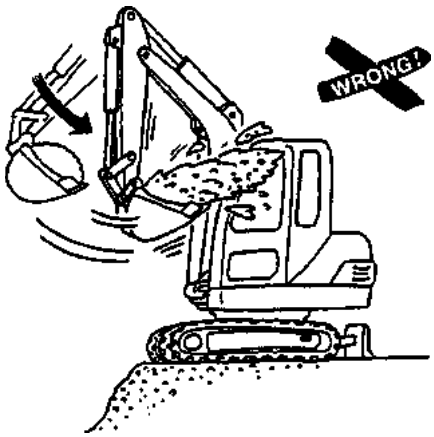

https://truckmanualshub.com/

PREVENT THE BUCKET FROM HITTING THE DITCH.

Be careful that the bucket will not hit the walls of ditch or the bank during swinging operation. This is likely to occur when conducting digging and dumping alternately.
Move the bucket slowly.

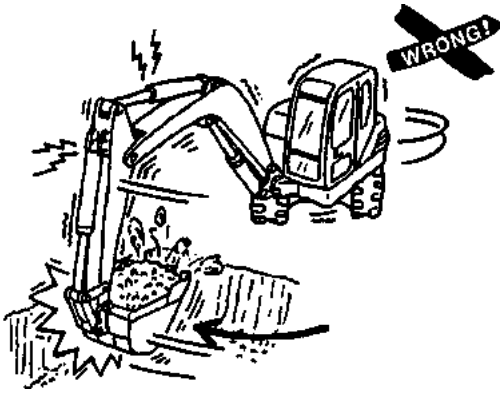

NEVER SWEEP WITH THE BUCKET.

Avoid sweeping the bucket like a broom in order to level off ahead of machine. This causes side strains and wear on the boom, arm, and bucket.

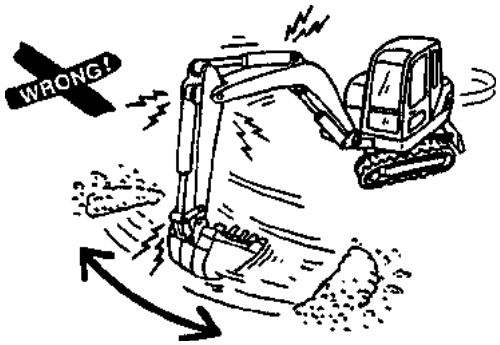

DO NOT MOVE THE ATTACHMENTS TO THE EXTREME ENDS OF THE STROKE.

If the rod is extended to the stroke end of the cylinder, the shock applies a large force to the cylinder, which may cause a damage to the boom or arm.
Operate the machine without moving the cylinder to the extreme end of the stroke.

It is recommended to operate the attachments near the stroke end of the cylinder.

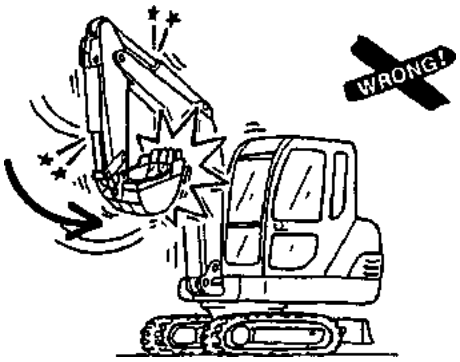

USE AN EXCLUSIVE MACHINE TO DIG OR BREAK EXTREMELY HARD MATERIALS.

Do not use the bucket to dig or break very hard materials like concrete. This will cause damage to the machine.

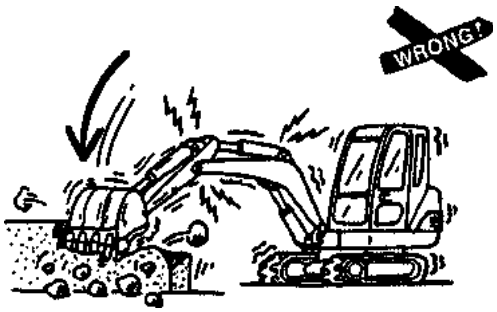

https://truckmanualshub.com/

DO NOT OVERLOAD TO CYLINDER.

Do not forcefully conduct digging operation beyond the capacity, which may overload any cylinder and open its relief valves. This causes damage to the hydraulic system and machine.

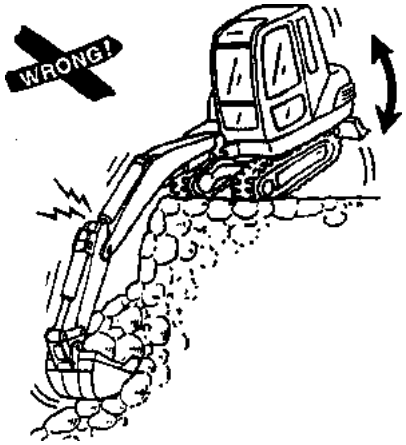

NEVER CONDUCT DIGGING OPERATION WITH FALLING FORCE OF MACHINE.

Do not raise off the rear of the machine from the ground and drop it down for digging up. This will cause excessive shock and damage to the machine.

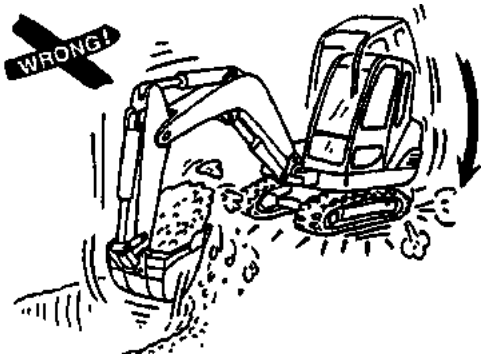

MEASURE DEPTH OF WATER AND CHECK CONDITIONS OF RIVERBED BEFORE FORDING.

Before fording, measure the depth of water and check the riverbed for holes. bumps, and any dangerous condition by following the next:

- Measure the depth of water first.
- Stop the machine and swing the bucket under the water to detect any bump or obstacle.
- Lower the bucket to measure the depth of water and detect holes occasionally.

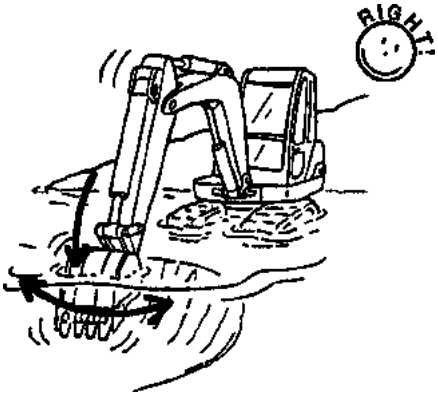

OBSERVIE THE ALLOWABLE WATER DEPTH.

Allowable depth of water is limited up to the center of the upper rollers.
Be sure to lubricate long-soaked parts until old grease comes out of the bearings.

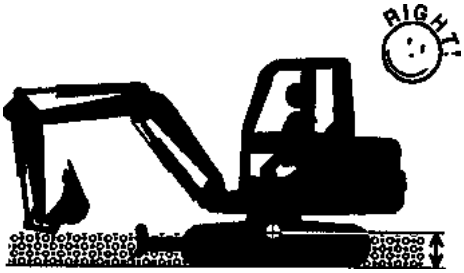

Allowable water depth

https://truckmanualshub.com/

DO NOT CRAWL WITH THE BUCKET.

Do not drag the bucket on the ground by crawling. Level the ground with proper equipments in a correct way.

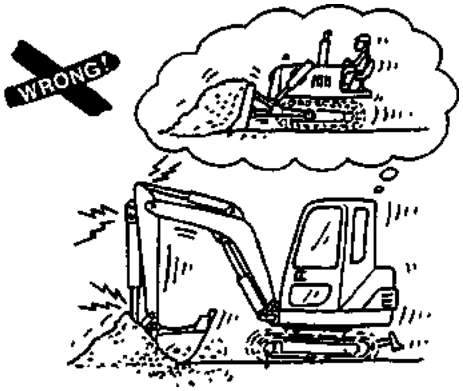

UTILIZE THE BLADE FOR DIGGING OPERATION.

Use the blade as a stabilizer for digging and follow the next precautions.

- Keep the entire blade contact with the ground. If the blade stays at an angle to the ground, or touches the ground partially, it may be damaged or loose its balance. To avoid this, level the ground first.
- Do not use the blade to excessively raise the tracks. Lower the blade only within a range where the tracks behind the blade lift slightly to ground the blade as a stabilizer.

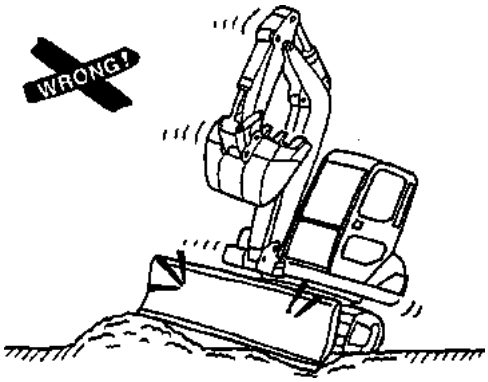

MAINTAIN A CORRECT BLADE POSITION.

If you need to conduct the deep digging with the blade, do not raise the blade so that the blade will not contact with the boom cylinder. Position the blade to rear if it is not necessary.

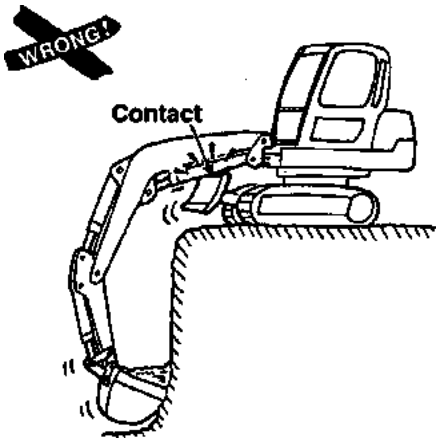

https://truckmanualshub.com/

TOPS THAT PROTECTS YOU FROM BEING CRUSHED BY THE TIPPED-OVER MACHINE

The cab-type machine is equipped with a **TOPS** (Tip over protective structure) as a standard specification.
The canopy-type machine is not equipped with a **TOPS** as standard, however, when the danger of turnover is expected while working on a soft. uneven. or included, we recommend the use of **TOPS canopy**.
Be sure to fasten the seat belt while operating the machine

NEVER try to jump out of the cabin when the machine falling down. This may crash an operator to serious injury or death.
TOPS canopy is avoidable as option. Consult your local **IHIMER** dealer.

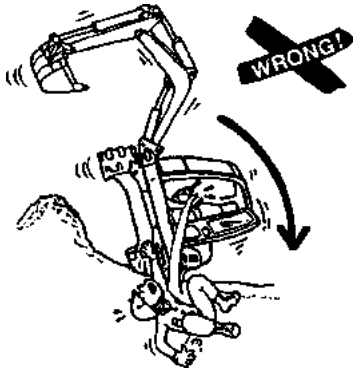

Never try to jump out

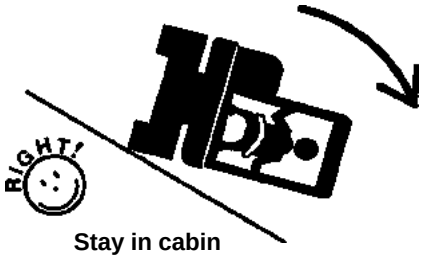

Stay in cabin

THE FRONT GUARD PROTECTS AN OPERATOR FROM FLYING OBJECTS THE FRONT.

When braking materials with the machine and objects are likely to fly from the front, the **front guard** shall be equipped. If it is not equipped, flying objects may cause injury or death.

The front guard is avoidable as option. Consult your local **IHIMER** dealer.

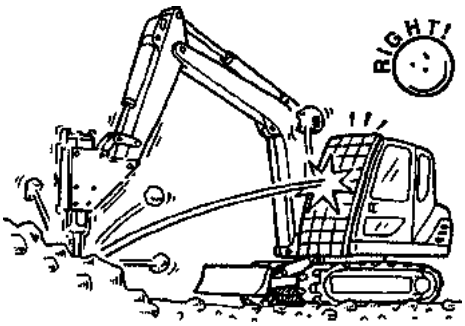

FOPS (TOP GUARD) PROTECTS AN OPERATOR FROM FLYING OBJECTS.

When working underneath cliff or destroying a building with the machine, the **top guard** shall be equipped.
Use the top guard to protect the operator and watch falling object. Otherwise falling objects may cause injury or death.
The top guard is avoidable as option. Consult your local **IHIMER** dealer.
FOPS: Falling-object protective structure.

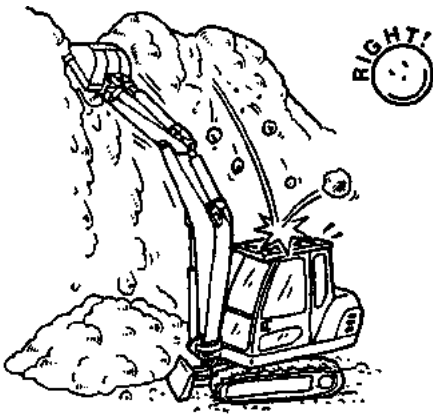

https://truckmanualshub.com/

SECURE FOOTING FOR SAFE OPERATION.

Check, that the machine footing is level and firm to avoid the skid or overturn. If you need to operate the machine on the shoulder of a road or a grade. check the ground for levelness and stability prior to operation.

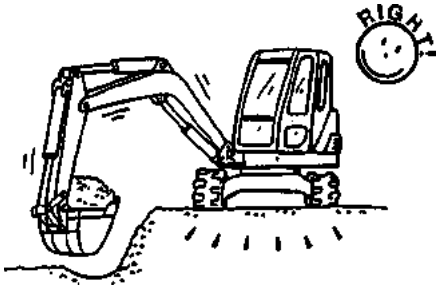

BE CAREFUL TO PREVENT TURNOVER.

The operating radius should be as small as possible when using the heavy bucket, and swing the boom slowly to prevent a turnover. Also, watch for buried objects during digging operation to prevent a turnover.

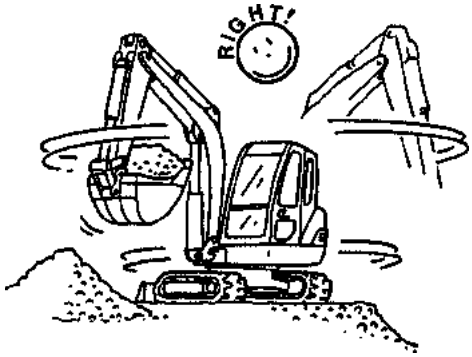

AVOID UNDERCUTTING THE MACHINE.

Do not try to dig close to the machine. If you undercut the machine, the footing may easily collapses. Recede from the digging site enough to keep a distance.

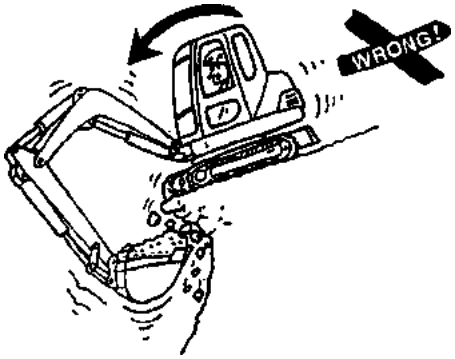

https://truckmanualshub.com/

OBSERVE FOOTING AT SWINGING.

To avoid tipping of the machine in swinging motion, check the machine footing whether it is level enough or not.

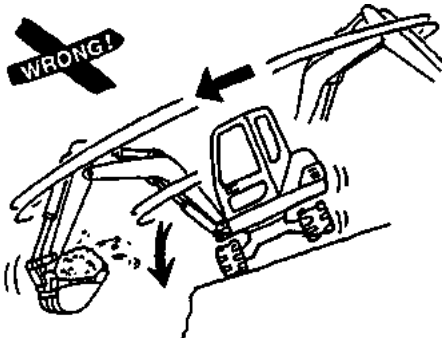

OBSERVE PRECAUTIONS ON OPERATION ACROSS TRACKS.

Pay attention to avoid turnover of the machine when lowering and swinging the boom from the blade side to either side of the machine at the same time. Since the width of each track is shorter than its length, stability is poorer over side than on the blade side.
On a grade, operate the machine slowly with the retracted arm in a reduced working radius.

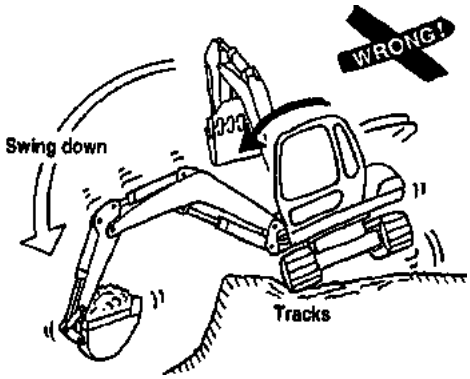

OBSERVE PRECAUTIONS WHEN OPERATING WITH LONG ARM.

Observe the following precautions to use the long arm.

① Do not use any combination of arm and bucket that we do not specify.

② Do not use the breaker attachment.

③ Do not lower and swing the boom at the same time on a soft ground or grade. Operate the machine slowly with the retracted arm in a reduced working radius.

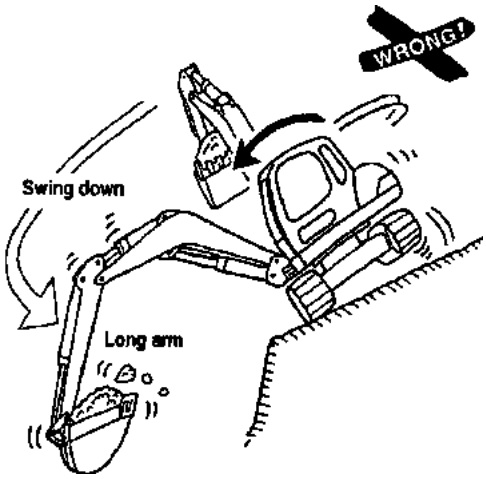

https://truckmanualshub.com/

REMEMBER OPERATING LIMITS.

1. Ground conditions
   The, ground should be level and firm for safe operation.
   If you have to operate the machine on a grade. the machine should be parallel with a grade. Do not have it cross a grade.
   If you have to operate the machine on a soft or unlevel ground, carefully operate the machine to avoid serious accidents like a turnover.

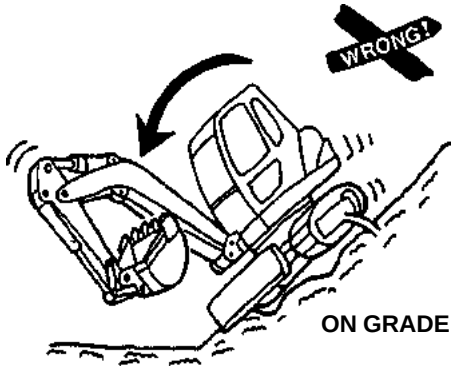

ON GRADE

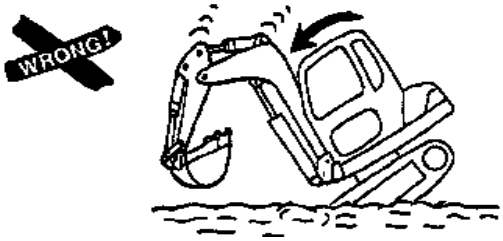

ON SOFT GROUND

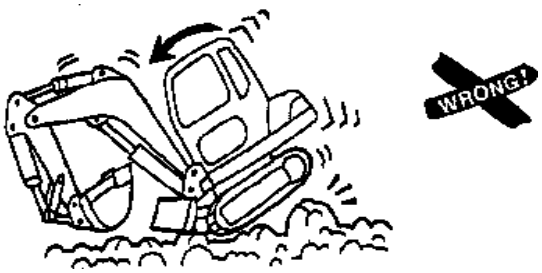

ON UNEVEN GROUND

2. Use of attachment

   ① When using the longer arm, great care should be taken. If tends to reduce the machine stability and limits the bucket size. Slowly operate the machine with the longer arm and watch the ground condition.

   ② When using the larger bucket, great care should be taken. It tends to reduce the machine stability. Slowly operate the machine with the larger bucket and watch the ground condition.

   ③ **ALWAYS** use a bucket whose capacity meets the specification.

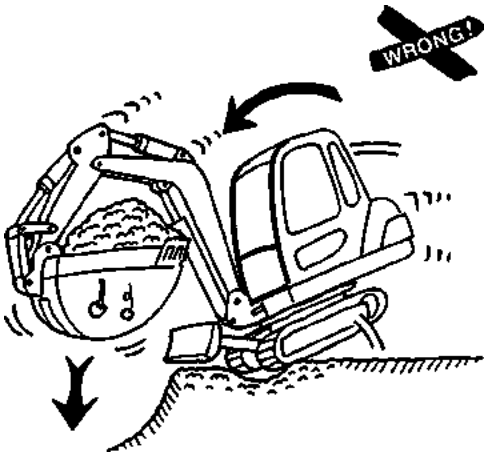

https://truckmanualshub.com/

LIFT COORDINATOR

One person should assume responsibility for coordinating all facets of the lift. He must take into consideration the operator, the machine, other personnel. bystanders and the surrounding area. He must be totally alert to the hazards involved, have in-depth knowledge of proper procedures and exercise good common sense all time.

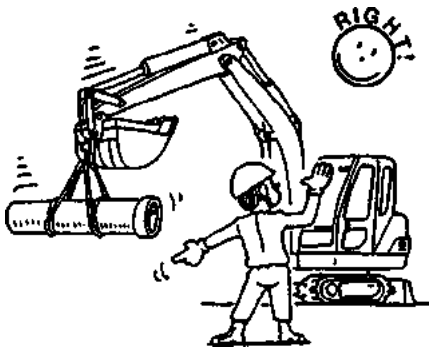

DO NOT OVERLOAD LIFTING.

Prominent among the safety measures unique to hydraulic excavators is the sole reliance upon the manufacturer's load rating chart as a guide to lifting capacity. Relying upon signs of tipping to warn of overload can result is machine damage or personal injury. Lifting capacity in excavators is usually determined by hydraulic and structural fitness, not tipping load. Before making a list, **ALWAYS** consult the load rating chart in the operator's cab.

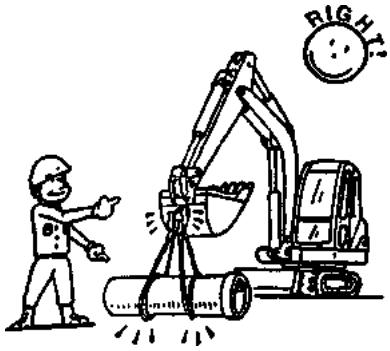

Stay within the lifting limits when laying pipes. Remember, you may be able to lift the pipe close in at ground level, but as you reach out and down, the lifting capacity decrease. If the machine is not on level ground. an instability will result, which could cause tipping. always use short slings to prevent excessive load swing.

⚠ CAUTION

There may be some local government regulations regarding the use of excavators to lift heavy objects. Please observe those regulations where they apply.

CHECK THE SLING CABLE AND DEVICES.

ALWAYS be certain that slings, ties and hooks are properly placed, secure, of adequate capacity and good condition before lifting materials

https://truckmanualshub.com/

LIFT THE UNDERCARRIAGE IN A PROPER WAY.

Do not lift up the machine excessively or in incorrect direction, which may cause a turnover.

In particular, avoid lifting up the machine with the extended arm at an angle with the machine.

When you have to lift up the machine. position the tracks either parallel with or at right angle with the machine.

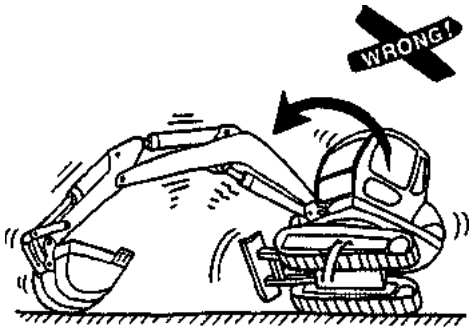

POSITION THE ARM VERTICALLY.

Do not try to lift up the front end of the tracks with the arm cylinder or bucket cylinder fully extended.
Position the arm vertically against the ground for lifting.

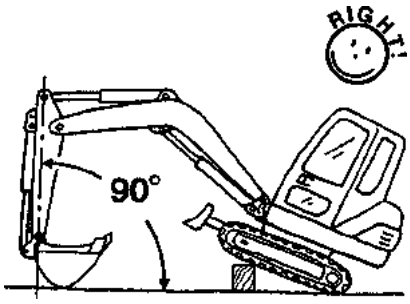

NEVER USE THE BLADE TO EXTRACT PILES.

Do not use the blade to lift up the machine to extract a pile. The great force of the blade cylinder overloads the machine, the attachment. cylinders, and other parts, which may cause serious accidents.

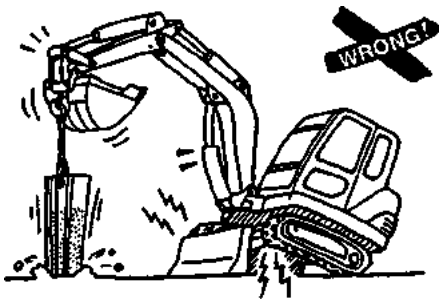

https://truckmanualshub.com/

1-7 SAFE TRAVEL

ALWAYS CHECK THE TRAVEL DIRECTION.

ALWAYS check in which direction the superstructure faces before controlling the travel levers. The machine is likely to travel in the opposite direction to your expectation when the superstructure directly faces to the rear.

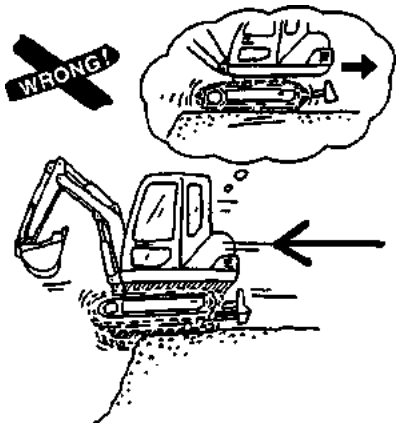

MAINTAIN OVERHEAD CLEARANCES.

ALWAYS be on the alert for overhead obstacles and be sure there is adequate side clearance when traveling. Get the assistance of the man on the ground when clearances cannot be ascertained from the operator's position.

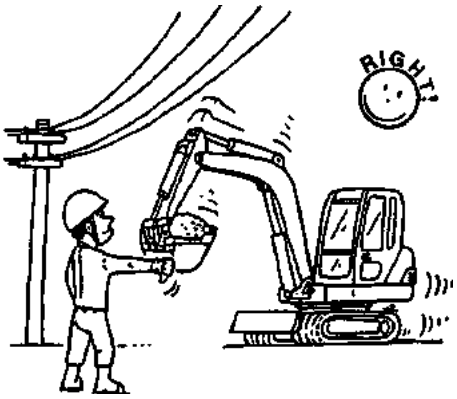

CAREFULLY TRAVEL THE MACHINE IN A NARROW AREA AND LOW CLEARANCE.

NEVER travel in an area where persons are coming and going or there are many objects. **ALWAYS** keep a safety distance around the machine. In a narrow area. place a signal person to guide the operator.
Before traveling, keep away persons from the traveling range.

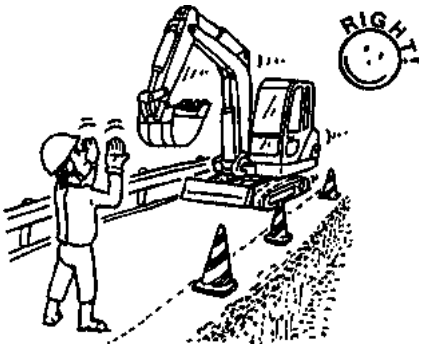

https://truckmanualshub.com/

CAREFULLY GO DOWNHILL.

Keep the bucket 200 mm to 300 mm Ⓐ above the ground while traveling on a grade.
When the machine skids or loses its balance, immediately put down the bucket onto the ground and stop travel.
Do not travel down in backward direction.
When traveling over any object, keep attachment close to the ground and slowly travel.

- When traveling uphill, or on a slope, keep the boom on the uphill side of the machine.

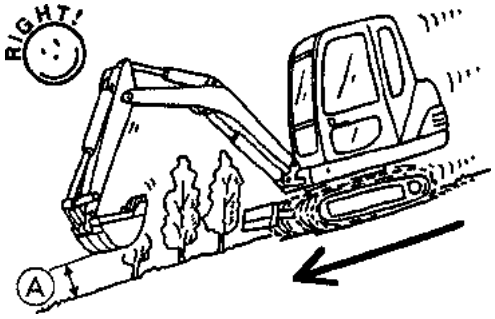

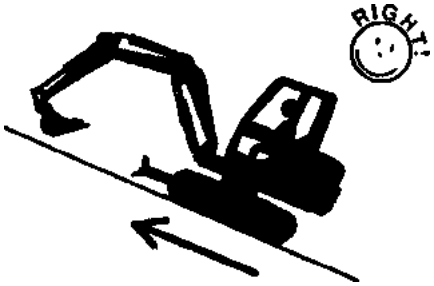

NEVER STEER ON A GRADE.

NEVER steer on a grade or unstable ground, which causes a turnover.
NEVER travel across a grade.
When traveling on a grade, travel up and down in parallel with the grade. Be careful to travel on the frozen ground since the machine tends to skid or fall down.

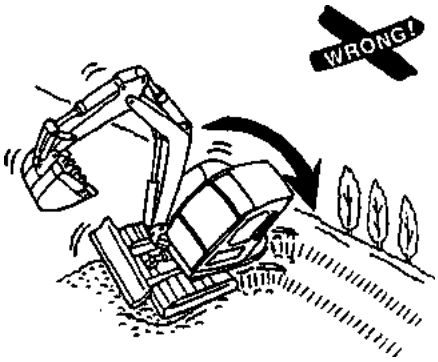

CHECK BRIDGES ARE SAFE.

Check the capacity of any bridge to be crossed to determain whether it will support the machine's weight.

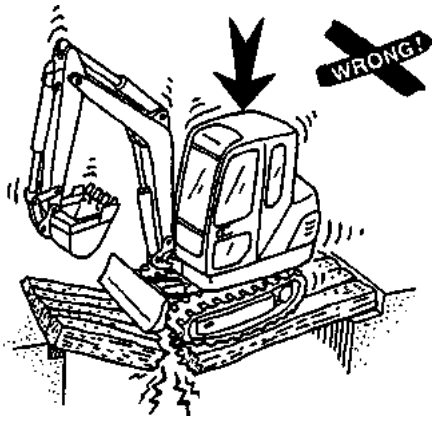

https://truckmanualshub.com/

SLOWLY TRAVEL THE MACHINE IN SPECIAL CONDITIONS.

Travel slowly when the ground is rough or covered with chunks of rock. Control the travel speed with the engine throttle lever.
NEVER cause shocks to the tracks and the machine.

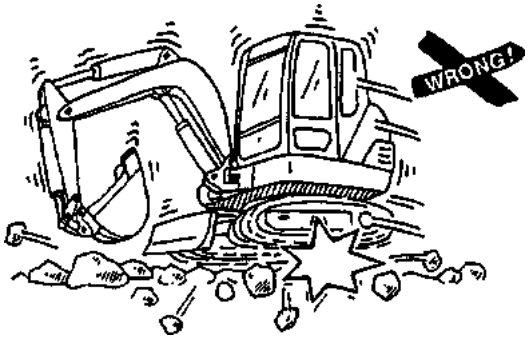

POSITION THE DRVIE SPROCKET TO THE RIGHT POSITION.

ALWAYS travel with the drive sprocket to rear. Keep the drive sprocket to rear in long travel in particular. If you position tt to front, wear at the lower structure will be enhanced.

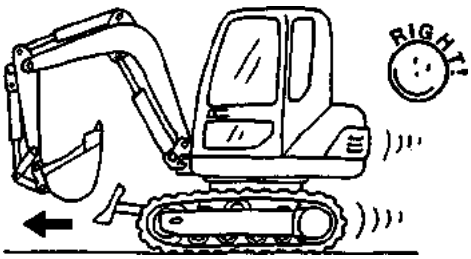

Sprocket

UTILIZE MATS AT A SPECIAL JOB SITE.

Use mats made of lumbers to support the machine on the soft ground or in a marsh.
Use the clean and level mats for safe operation. Remember that the mats cannot support the machine in every condition.
Carefully check the job site first and confirm that safety can be secured by the mats.

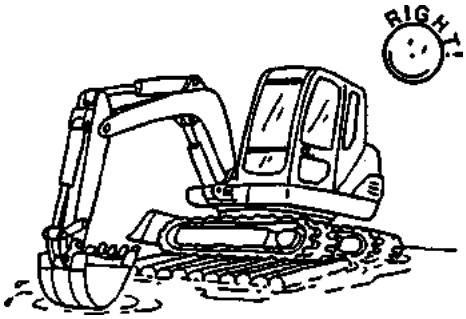

https://truckmanualshub.com/

ALWAYS MAKE SLOW TURNS.

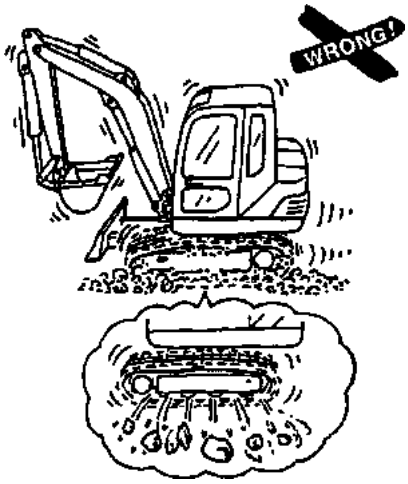

ALWAYS try to make slow turns as much as possible other than emergency. Sharp turns or standing pivot turns will shorten the machine useful life.

Slowly change the travel direction on the unlevel or rough ground. Sharp turns tends to overstress the crawler.

1-8 TOWING

CAREFULLY TOW THE MACHINE.

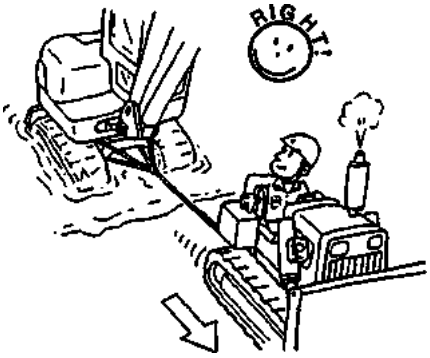

If the machine sinks down on a soft ground and cannot crawl up by itself, a wire rope should be attached to the rear axle and the machine should be towed by a towing machine.

NEVER attach the wire rope to the towing hook at the rear axle, which causes damage to the axle and the hook, and personal injury may occur.

USE THE TOWING HOOK PROPERLY.

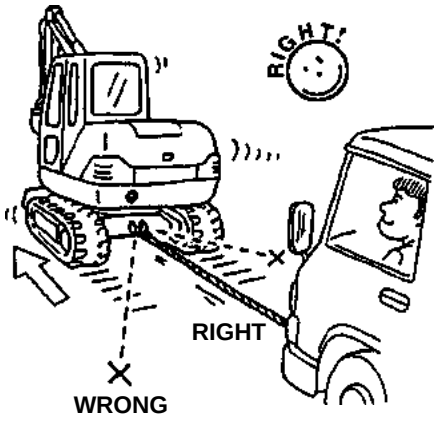

The towing hook is used to tow for lightweight material. The maximum allowable towed weight is **500kg.**

NEVER tow the machine with the towing hook, which may damage the towing hook and cause a personal injury.

Keep the to line angle to a minimum. Do not exceed a 30° angle from the straight ahead position.

https://truckmanualshub.com/

1-9 SAFE TRANSPORTATION

CAREFULLY LOAD AND UNLOAD THE MACHINE.

ALWAYS load and unload the machine on the level ground.
Use a ramp that has sufficient strength, width, length, and thickness.
Remove ice, snow, or slippery material from the ramp and truck deck before loading.
NEVER make a turn on a ramp.

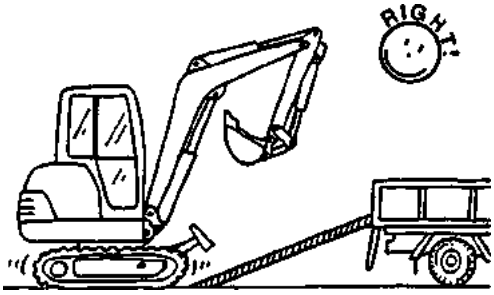

Do not raise the boom excessively at loading and unloading.

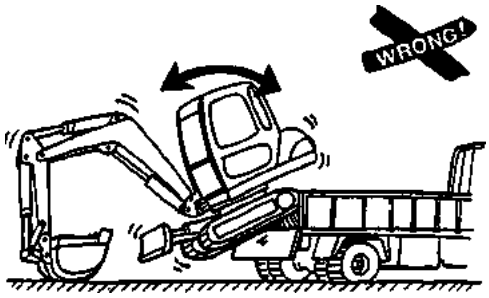

NEVER LOAD AND UNLOAD THE MACHINE WITHOUT RAMPS TO PREVENT TURNOVER.

NEVER lift up the machine using the boom to load and unload the machine on and out of the truck. This is very dangerous.

ALWAYS ensure that a ramp has sufficient strength and length to accommodate the size and weight of the machine.

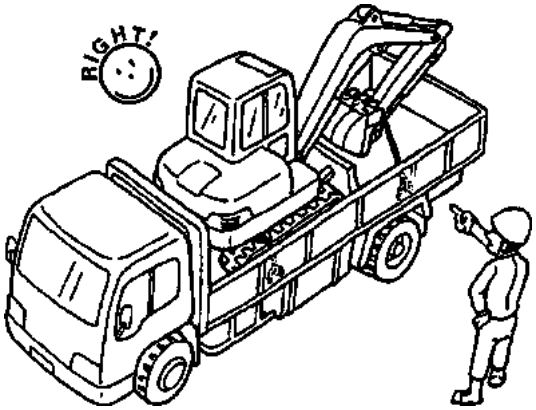

OBSERVE PRECAUTIONS ON TRANSPORTATION.

Be sure to engage the swing lock.
Block tracks and secure the machine to the truck before transporting.
Prior to transportation, check the travel route for clearances around the truck and the machine.

https://truckmanualshub.com/

1-10 PARKING THE MACHINE

BANKS AND SLOPES

NEVER leave the machine on or near any bank which may case. or on the edge of an excavation which might give way. Back the machine away from such areas which it is to be left idle or unattended for more than a brief period. Whenever possible, park on level ground.

DO NOT PARK THE MACHINE ON A GRADE.

If you have to park the machine on a grade, **ALWAYS** lower the bucket and the blade onto the ground and block the machine.

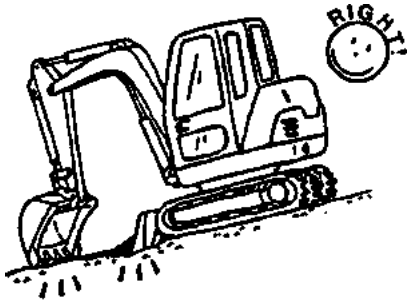

OBSERVE PRECAUTIONS WHEN PARKING THE MACHINE ON THE ROAD.

If you have to park the machine on the road, use appropriate flags, barriers. flares, and warning signals.

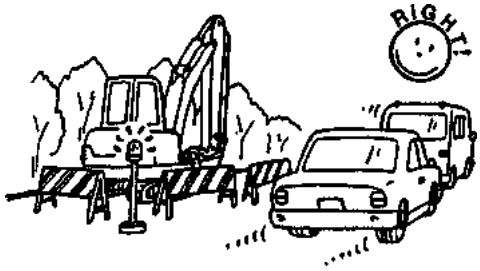

OPERATOR LEAVING MACHINE

ALWAYS lower attachments to rest on ground and stop engine before leaving the machine unattended.
Engage all locks, turn off the start switch, and remove the start key. Lock the windows and doors.

https://truckmanualshub.com/

1-11 SAFE MAINTENANCE

KEEP ROUTNE MAINTENANCE

Maintenance work can be hazardous if not done in a careful manner. All personnel should realize the hazards and strictly follow safe practices. before performing any maintenance or repair work. consult the instruction manual.
Before maintenance, stop the engine and do not conduct any operations.

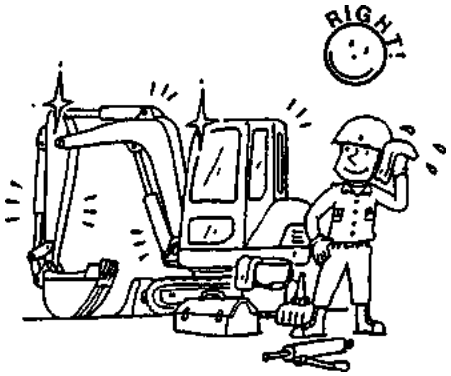

PERFORM MAINTENANCE WORK CORRECTLY.

While maintenance work is being done, that starting controls should be **TAGGED**. the tag should be removed only by someone who is aware of the circumstances, and who can assure that it is safe to do so.

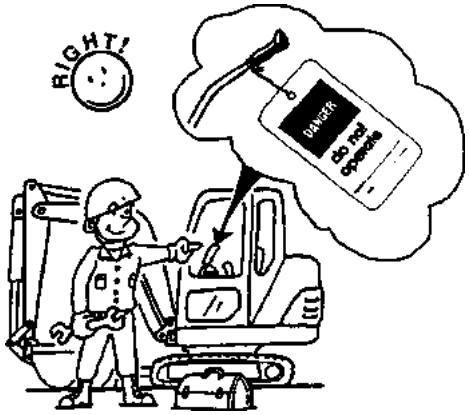

ALWAYS CLEAN THE MACHINE.

Maintain the machine clean for safe operation.
Remove dirt, grease, maintenance tool from the operator's cab for secured control.
Clean the window to obtain good sight.
Do not place anything flammable around the machine.

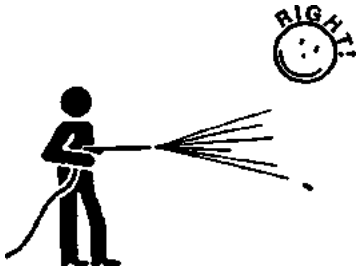

SET HYDRAULIC PRESSURE CORRECTLY.

Only qualified person is allowed to gauge and adjust the hydraulic pressure following the specified procedure and using the correct gauge if necessary.
If there is no qualified person, consult your local **IHI** distributor.

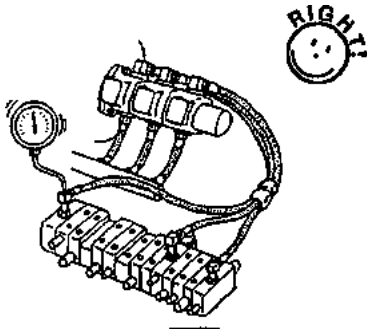

https://truckmanualshub.com/

PREVENT CRUSHING OR CUTTING.

Before **ANY** kind of adjustment or service of the machine, stop the engine and do not operate the machine.

NEVER fuel or lubricate when the engine is running.

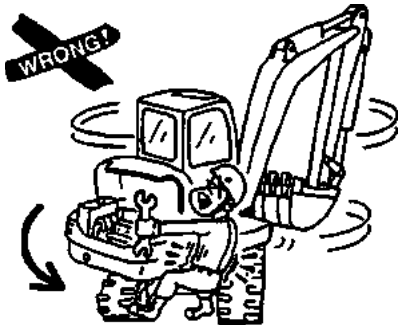

NEVER LEAN OUT OF THE WINDOW.

Keep your body inside the operator's cab.

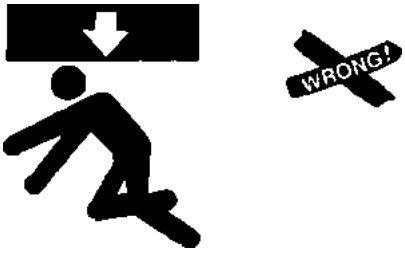

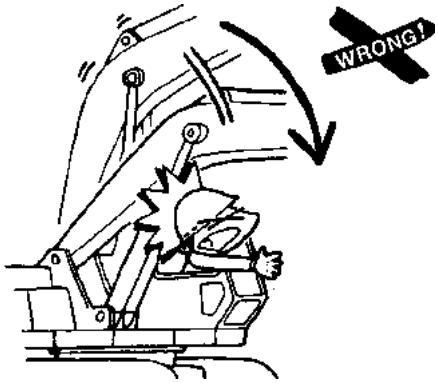

The boom may fall down onto you if the boom control lever is accidentally pressed.
If the window is missing or broken, replace immediately.

SUPPORT THE UNDERCARRIAGE WHEN WORKING UNDER TRACKS.

NEVER allow anyone to work undercarriage that is lifted and not properly blocked.
Check that the machine is supported sufficiently by the blocks and will not fall down.
Do not keep the machine lifted up only by the boom and arm. Attach a warning tag to warn, **"DO NOT OPERATE".**

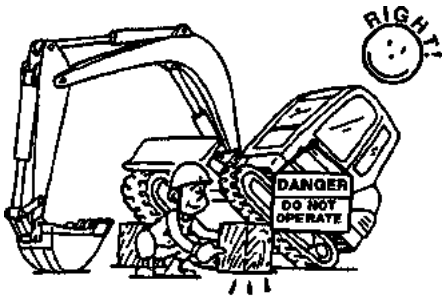

https://truckmanualshub.com/

PREVENT FIRE OR EXPLOSIONS.

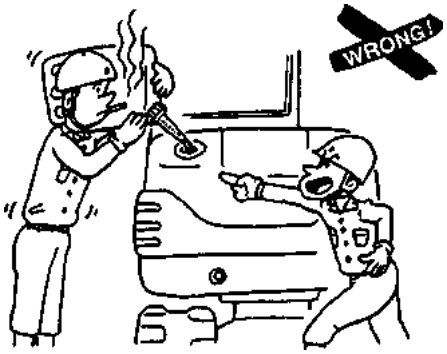

Keep away fuel, lubricant. and coolant from any fire or heat. Most of them are very flammable.
NEVER place flammable materials or objects close to fire or heat.

NEVER SMOKE WHILE REFUELLING.

NEVER smoke while refuelling or in a place close to flammable objects.

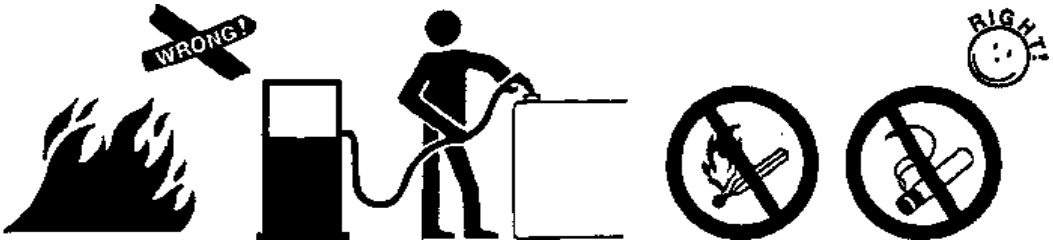

DO NOT TOUCH BATTERY ELECTROLYTE.

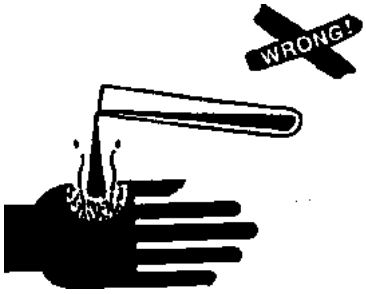

Battery post, terminals and related accessories contain lead and lead compounds. Wash hands after handling.

Battery acid will **burn skin,** eat holes in clothing, and **cause blindness** if splashed into eyes. If you spill acid on yourself flush skin immediately with lots of water. Apply baking soda to help neutralize the acid.
If acid gets in your eyes, flush immediately with large amount of water and seek proper medical treatment immediately.

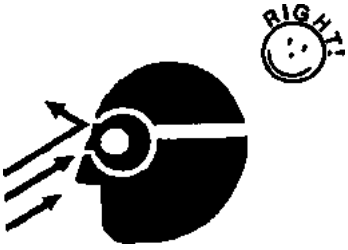

Eye protection required

When servicing battery remember that a lead-acid storage battery generates (when charging or discharging) hydrogen and oxygen – a very explosive mixture. A spark or flame could ignite these gases.

Always wear **safety grasses and groves** when working with battery.

https://truckmanualshub.com/

ALWAYS RELEASE PRESSURE BEFORE DISASSEMBLING HYDRAULIC LINES.

Before disconnecting **hydraulic fluid lines** on a hydraulic machine, be sure you.

- Place boom on the ground or have it supported.
- Shut off engine.
- Always release any pressurized air on hydraulic tank.
- Move control levers and pedals repeatedly through their operating positions to relieve pressures.

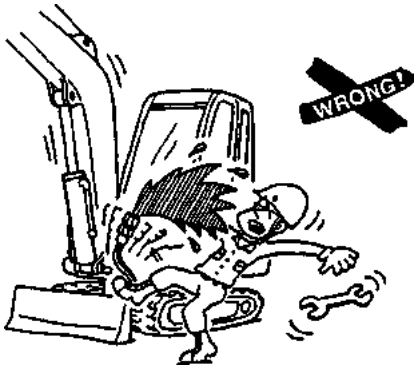

PRESSURIZED HYDRAULIC FLUID CAN PENETRTE THE SKIN AND. CAUSE SERIOUS INJURY OR DEATH.

Therefore, be sure all connection are tight and that lines, pipes, and hoses are in good condition before starting the engine.

Fluid escaping from a small hole can be almost invisible. Use a piece of cardboard or wood, instead of your hands, to search for suspected leaks.

If you are struck by escaping hydraulic fluid under pressure, serious reactions can occur if proper medical treatment is not administered immediately. .

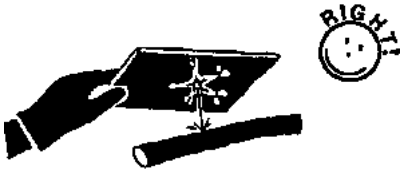

NEVER WATCH THE RELIEF VALVE WHEN ADJUSTING TRACKS.

NEVER watch the relief valve When servicing the tracks. Position yourself not to be splashed with grease. Grease used to adjust the tracks is highly pressurized and can cause serious injury or death.
Carefully read and understand the maintenance procedure for track adjustment.

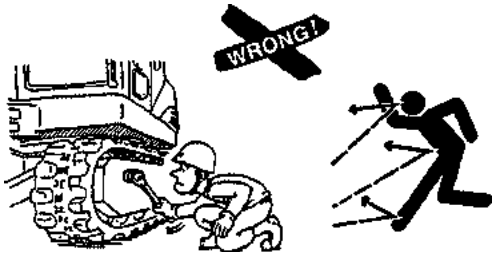

https://truckmanualshub.com/

BE CAREFUL TO ROTATING AND MOVING PARTS.

Do not come close to all rotating or moving parts such as a fan belt.
Do not allow any object to come near moving parts.
It will be repelled and thrown out, which may cause personal injury.

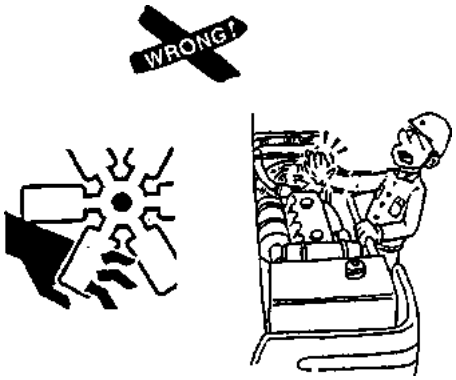

BE CAREFUL TO HOT ENGINE AFTER THE MACHINE STOPS.

NEVER touch the engine or muffler right after the machine is stopped. It is very hot and causes burns.

CAREFULLY HANDLE THE ENGINE COOLANT.

NEVER try to open the coolant filler cap while the engine is running or right after the engine is stopped. If the cap is open. the very hot steam will blow out. which causes serious burns. Wait until the coolant temperature goes down.

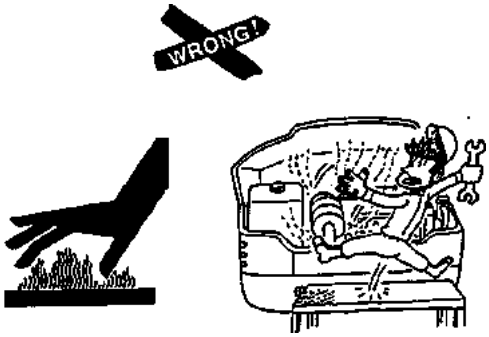

Slowly open the filler cap to release the pressure.

Do not touch the engine coolant directly. It may cause injury to your skin. Wear gloves or use a cloth to handle it. **NEVER** drink it. or **NEVER** let it come in contact with your eyes.

Before draining the engine coolant. cool down the radiating systems.

If you drink antifreeze. **IMMEDIATELY** have it thrown out and call for emergency medical cure.

Do not leave any tool on the machine after maintenance and place it in place before re-starting operation.

https://truckmanualshub.com/

1-12 WARNING SIGNS AND LABELS

There are several specific safty signs on your machine. Their exact location and description of the hazard are reviewed in this section.
Please take the time to familiarize yourself with these safety signs.

Wake sure that you can read all safety signs. Clean or replace these if you cannot read the words or see the pictures. When cleaning the labels use a cloth, water and soap. Do not use solvent, gasolin, etc.

You must replace a label if it is damaged, missing or cannot be read. If a label is on a part that is replaced, make sure a new label is installed on the replaced part. See your **IHI** dealer new labels.

Located warning lavels

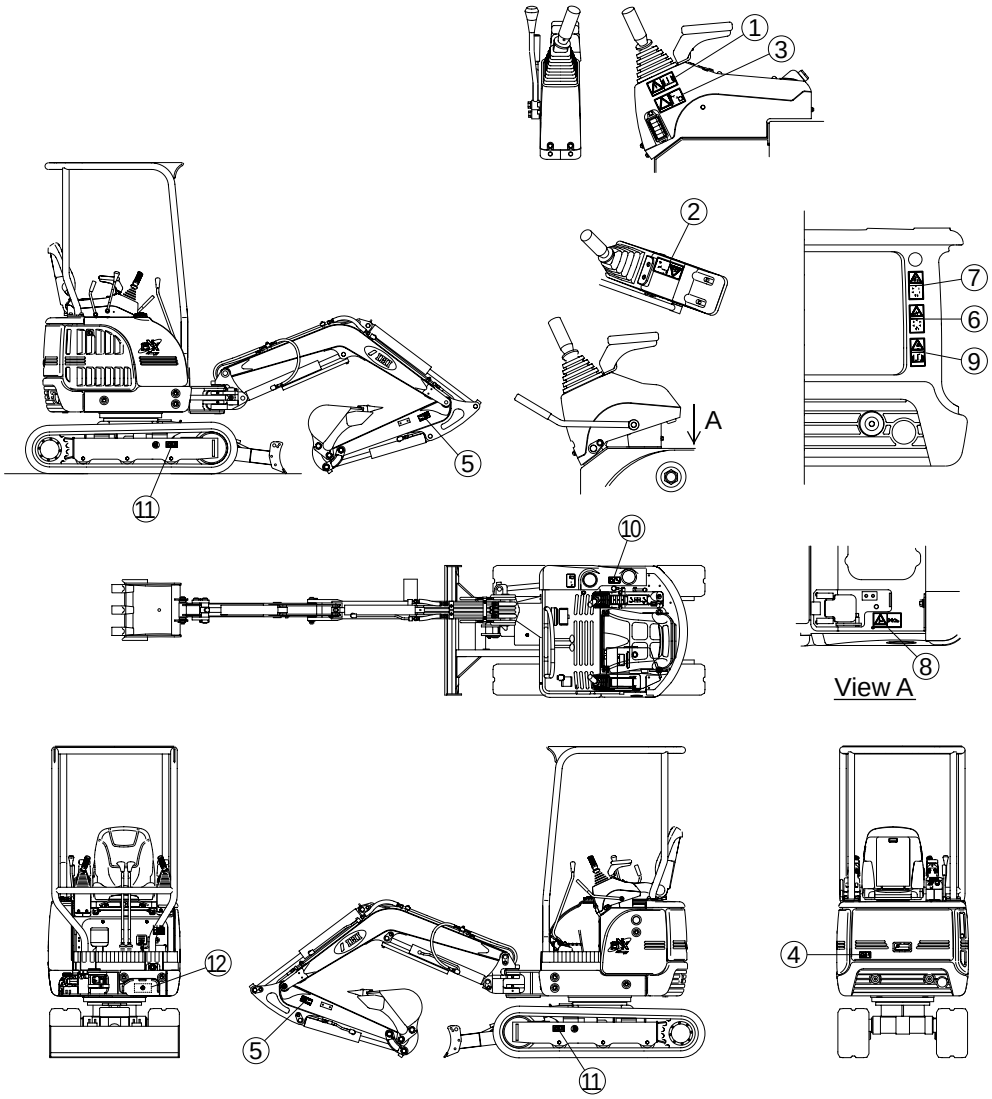

https://truckmanualshub.com/

Illustrated symbol	Recommended expantion
①	
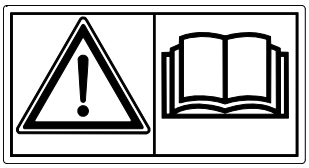	Read manual before operation, maintenance, disassembly, assembly and transportaion.
②	
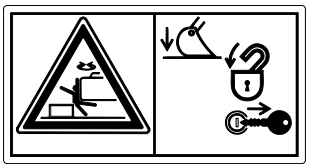	Sign indicates a hazard of being crushed or run over by unexpected mo bing of stopped machine. Lower working device to locke position and remove engine key with you before leabing machine.
③	
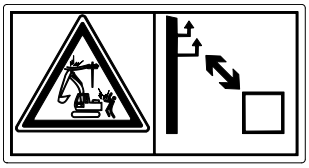	Sign indicates an electroction hazard if machine is broutht too near electric power lines. Keep a safe distance from electric power lines.
④	
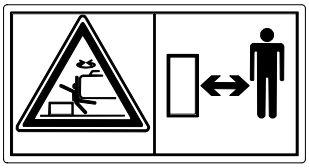	Sign indicates a crush hazard by rotation of upper structure of the machine. Keep away frrom swing area of machine.
	⑤ Sign indicates a hazard of being hit by the working device of the machine. Keep away from machine during operation.
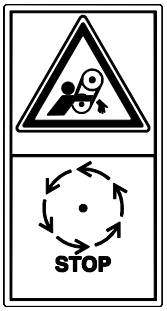	⑥ Sign indicates a hazard of rotating parts, such as belt. Turn off before inspection and maintenance.
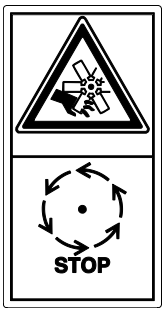	⑦ Sign indicates a hazard of rotating parts, such as fan. Turn off before inspection and maintenance.
⑧	
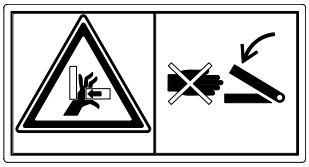	Do not put your hand in the machine. Otherwise, you might get your hand caught in it.

https://truckmanualshub.com/

Illustrated symbol	Recommended expantion
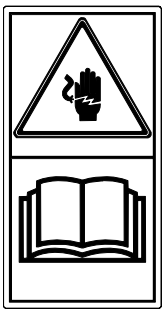	⑨ Sign indicates an electrical hazard from handing the cable. Read manual for safe and proper handing.

Illustrated symbol	Recommended expantion
	⑩ Sign indicates a burn hazard from spurting hot water or oil if radiator or hydraulic tank is uncapped while hot. allow radiator or hydraulic tank to cool before removing cap.

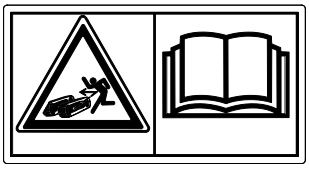

⑪ Sign indicates a hazrd of flying plug from track adjuster that could cause injury. Read manual before adjusting track for safe and proper handling.

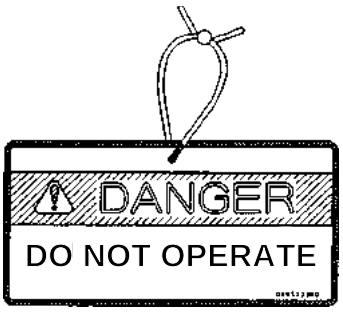

⑫ **DANGER!**

Attach a DO NOT OPERATE warbubg tag ti start switch or controls before servicining or repeairing the machine.
Do not start the engine or move any of the controls if their is DO NOT OPERATE or similar warning tag attached to the start switch or controls.
Keep in the tool box do not use warning tag.

https://truckmanualshub.com/

2 OPERATION

2-1 NOMENCLATURE

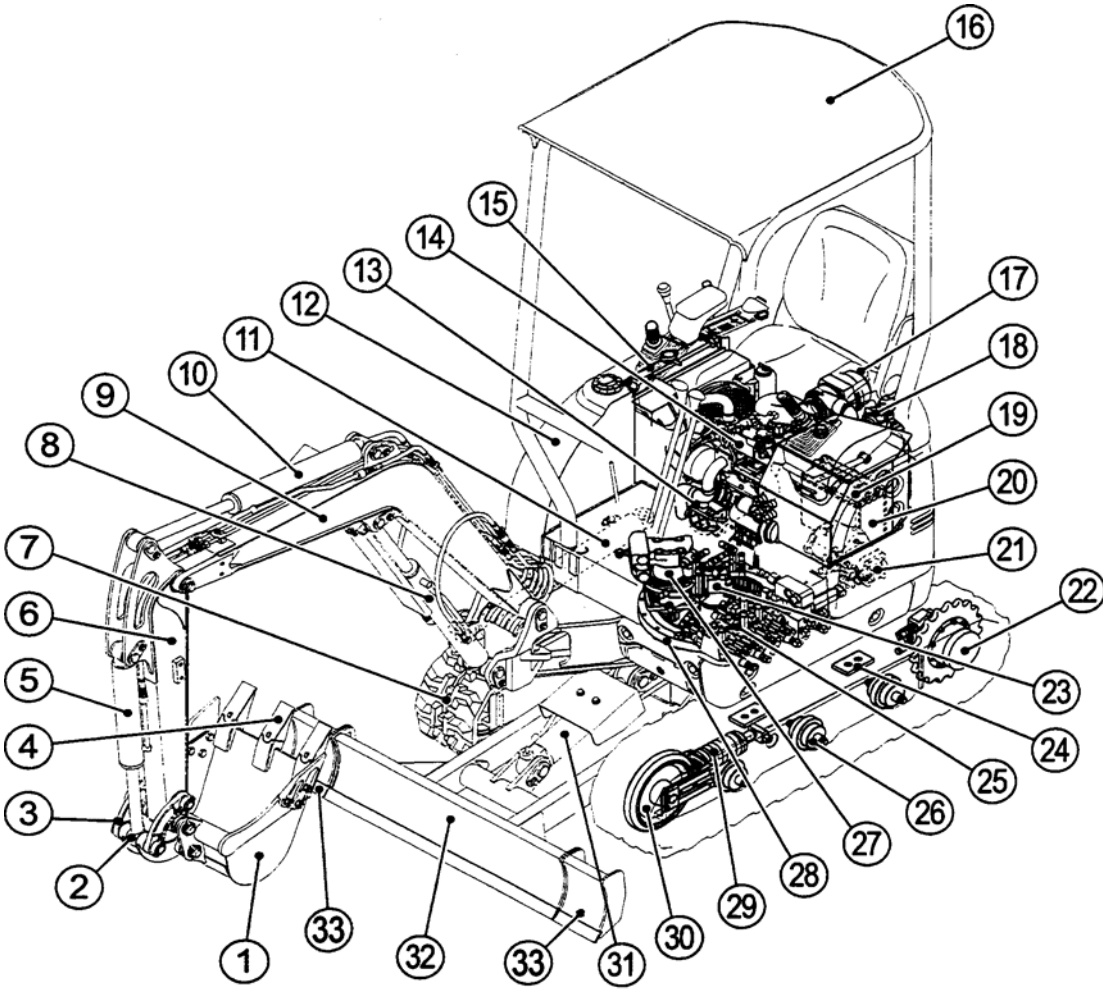

Typical Example

(1) Bucket	(12) *Does not apply	(23) Rotary Joint
(2) Bucket Link	(13) *Does not apply	(24) Guide Plate
(3) Arm Link	(14) Motor	(25) Control Valve
(4) Tooth	(15) Oil Cooler	(26) Track Roller
(5) Bucket Cylinder	(16) TOPS Canopy	(27) Swing Drive (with motor)
(6) Arm	(17) Air Cleaner	(28) Swing Bearing
(7) Track Shoe	(18) Return Filter	(29) Track Adjuster
(8) Boom Cylinder	(19) Does not apply	(30) Front Idler
(9) Boom	(20) Hydraulic Tank	(31) Blade Cylinder
(10) Arm Cylinder	(21) Hydraulic Pump	(32) Blade
(11) Boom Swing Cylinder	(22) Travel Drive (with motor)	(33) Blade extensions

https://truckmanualshub.com/

2-2 CONTROLS AND INSTRUMENTS

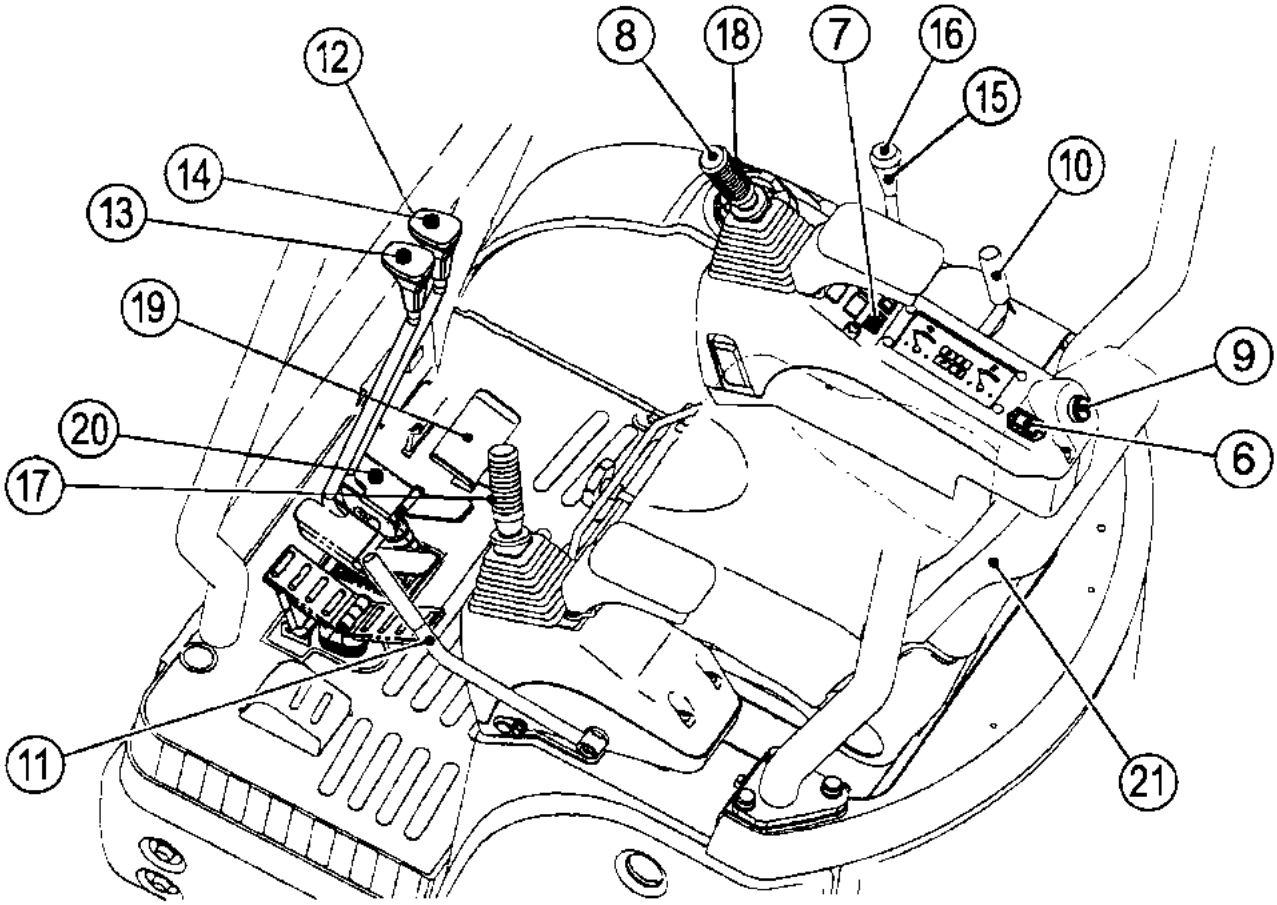

Typical Example

(6) Service Hour Meter

(7) Light Switch

(8) Horn Switch

(9) * Does not apply

(10) * Does not apply

(11) Control Shut-Off Lever

(12) High Speed Travel Switch

(13) Left Travel

(14) Right Travel Lever

(15) Blade - Spanner Control Button

(16) Blade - Spanner Lever

(17) Left Operating Lever

(18) Right Operating Lever

(19) Boom Swing Pedal

(20) Travel pedals

(21) Operator’s Seat

https://truckmanualshub.com/

*Does not apply

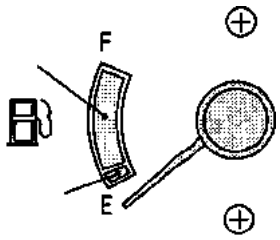

* Does not apply

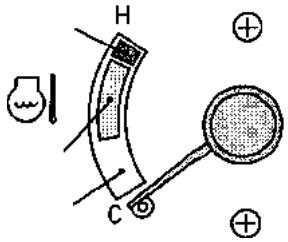

⑥ **Service Hour Meter**

Indicates the total operating hours of the machine. It should be used to determine service hour maintenance intervals.

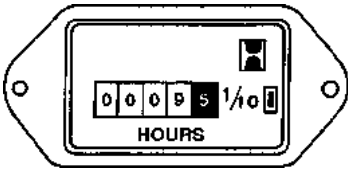

https://truckmanualshub.com/

3. SWITCHES

⑦ Light Switch

Push down on the [ ] marked of the switch to turn the light on.
Push down on the blank half of switch to turn the working light off.

LIGHT

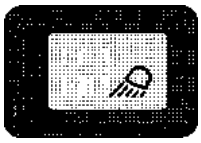

⑧ Engine Start Switch * Does not Apply

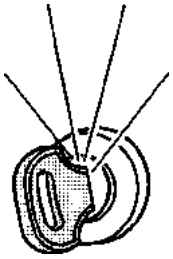

Horn switch

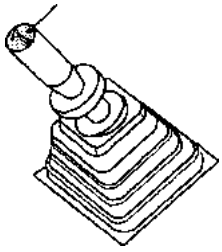

Right operating lever

⑨ Horn switch

Push down on the top of the right operating lever to activate the horn.

https://truckmanualshub.com/

4. MACHINE CONTROLS

⑩ * Does not apply

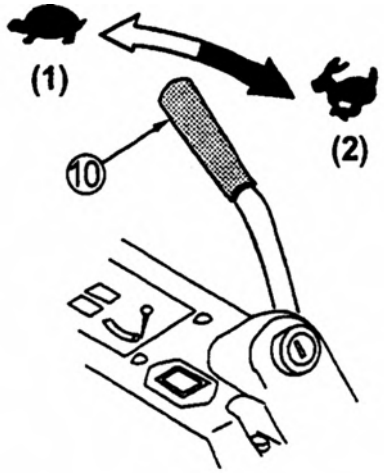

.

⑪ **Control Shut-off Lever (Left Levers)**
(for all hydraulic activation contorols)

⚠ CAUTION

To mounting and dismounting the machine, be sure to put the shut-off lever in the **LOCKED** position.
If the lever is in the **UNLOCKED** position, upper structure can swing and can result personal injury.

Locked : Move the lever back to the locked position. This makes all hydraulic activation contorols inoperable.

Unlocked : Move the lever forward to the unlocked position. This makes all hydraulic activation controls operable.

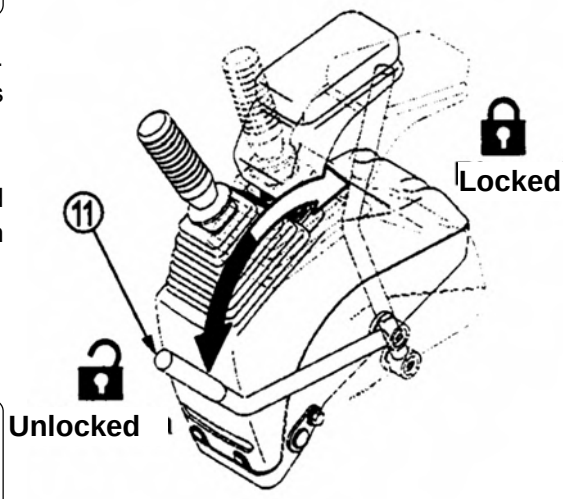

⑫ **High Speed Travel Button**

⚠ CAUTION

* **NEVER** high speed travel on a grade or loading and unloading the machine.
* When control shut-off lever is locked, does not change to high speed travel.

Low Speed Travel
Release the button to low speed travel. Select the **LOW** speed travel when driving on rough or soft surface. Low is also recommended for loading or unloading from a truck.

High Speed Travel
During push down the button to shift the high speed travel. Select the **HIGH** speed travel when driving on a hard even surface.

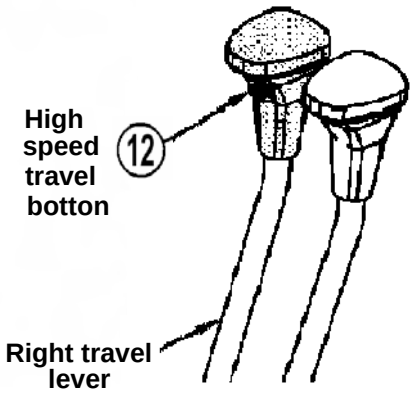

https://truckmanualshub.com/

⑬ **Left Travel Lever**
⑭ **Right Travel Lever**

CAUTION

* Normal traveling is when the drive sprocket are under the rear of the machine. Blade are under the front of the cab. Reverse traveling is when the cab is over the sprockets. Both the directional and traveling functions will be reversed.
* Always travel with sprockets under the rear of the machine.

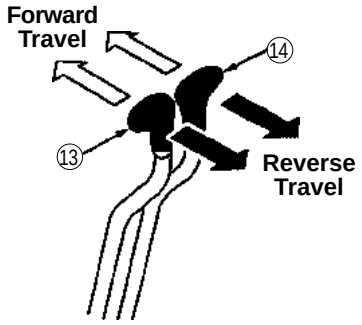

Forward Direction Travel :
Move the both travel levers forward to move the machine forward direction.

Stop :
Release the travel levers to stop the machine and apply the brakes.

Reverse Direction Travel :
Move the both travel levers rear to move the machine reverse direction.

Refer to Traveling the Machine section of this manual.

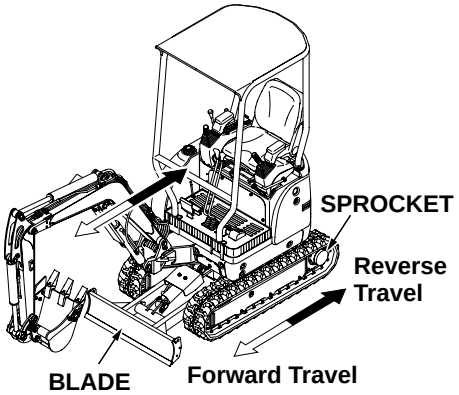

https://truckmanualshub.com/

(15) Blade - Spanner Control Button

Operations that will be executed by lever (16) (Blade - Spanner Lever) must be selected through this button.

Blade operations: Release the button to selected "Blade operations" modality.

Spanner operations: Push the button to selected "Spanner operations" modality.

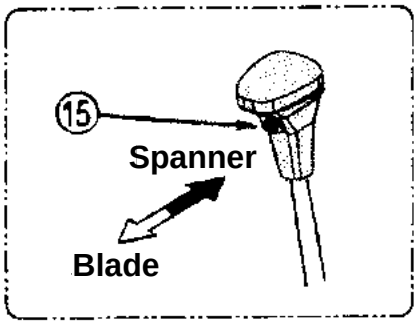

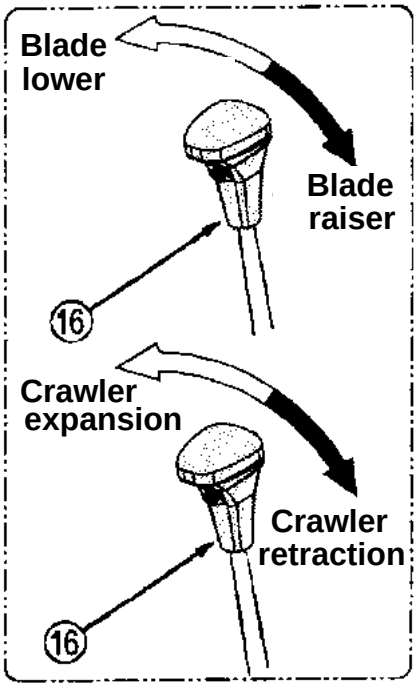

(16) Blade - Spanner Lever

Blade operations:

Blade raise: Move the lever back to raise the blade
Blade lower: Move the lever forward to lower the blade

Spanner operations:

With the green Blade - Spanner Control Button pushed.

Crawler expansion: Pusher the spanner - blade lever forward.
Crawler retraction: Pull the spanner - blade lever backward.

https://truckmanualshub.com/

⑰ Left Operating Lever

[Swing and arm controls]

1. **Arm Out :**
   Move the lever forward to move the arm out.

2. **Arm In :**
   Move the lever rear to move the arm in.

3. **Swing Right :**
   Move the lever right to swing the upper structure to the right.

4. **Swing Left :**
   Move the lever left to swing the upper structure to the left.

5. **Hold :**
   When the lever released from any position, the lever will return to hold (center position). Arm or swing movement will stop.

   Two Functions may be performed at the same time by moving the lever diagonally.

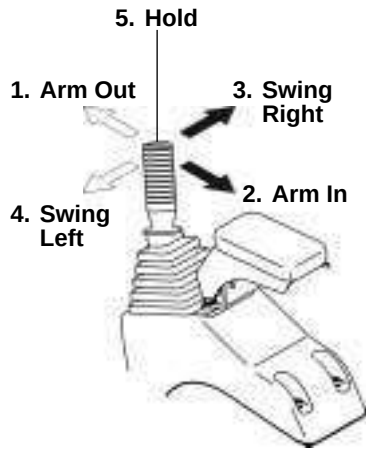

ISO System

⑱ Right Operating Lever

[Bucket and boom controls]

1. **Boom Lower :**
   Move the lever forward to lower the boom.

2. **Boom Raise :**
   Move the lever back to raise the boom.

3. **Bucket Dump :**
   Move the lever right to dump the bucket.

4. **Bucket Dig. :**
   Move the lever left to close the bucket.

5. **Hold :**
   When the lever released from any position, the lever will return to hold(center position) . Boom or bucket movement will stop.

   Two Functions may be performed at the same time by moving the lever diagonally.

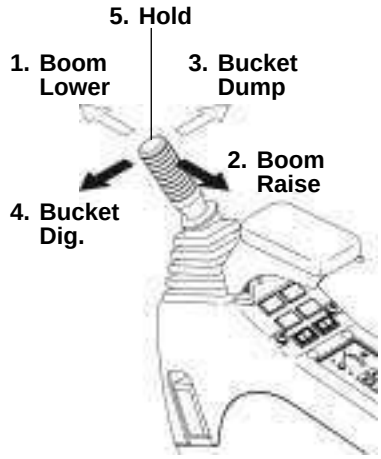

ISO System

https://truckmanualshub.com/

⑲ Boom Swing Pedal

CAUTION

ALWAYS locked pedal when is not in use.

Boom swing right :
Push down right on the pedal to swing the boom to the right.
Boom swing left :
Push down left on the pedal to swing the boom to the left.

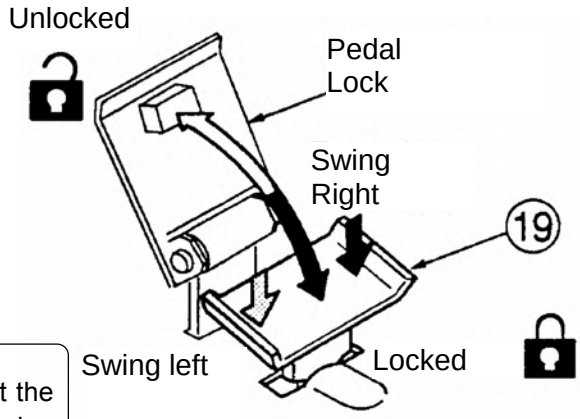

⑳ Operator's Seat

CAUTION

* Seat adjustment should be checked at the beginning of each shift or when changing operator.
* Lower the bucket on the ground, stop the engine and then make adjustment.

Seat Adjustment
Seat position can be adjusted forward or backward and seat back tilt. Select the desired position to allow full pedal and lever travel.

To Adjust the Seat Forward or Backward.
Pull up and hold lever ② and move the seat to the desired position. Release the lever to hold the seat in the selected position.

To Adjust the Seat Back Tilt.
Turn knob ③ clockwise to tilt the seat back to backward.
Turn knob ③ counter clockwise to tilt the seat back to forward.

To Adjust the Seat Suspension.
Turning knob ① clockwise increases suspension stiffness and turning it counterclockwise decreases suspension stiffne

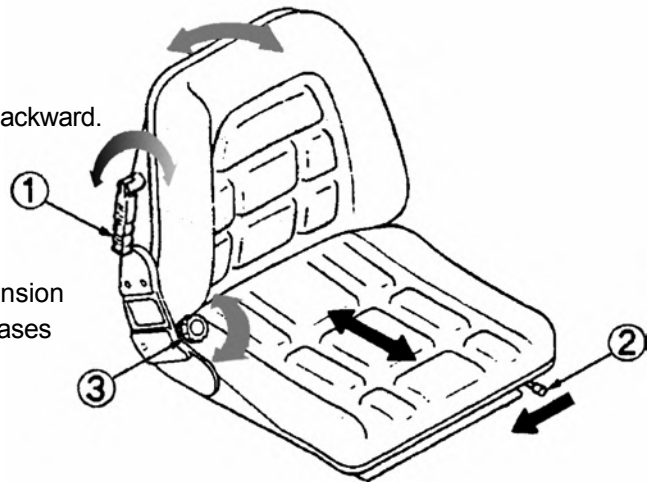

https://truckmanualshub.com/

㉑ SEAT BELT

CAUTION

* **ALWAYS** fasten the seat belt while operating the machine.
* **ALWAYS** check the condition of the seat belt and mounting hardware before operating the machine. Replace if damaged.

Typical Example

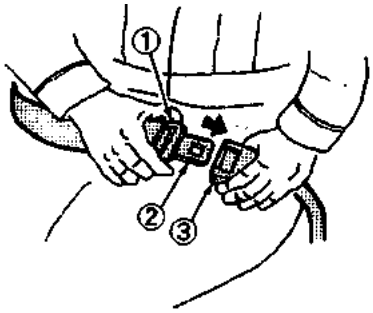

To Check the Belt

Check for worn or damaged buckle, extrusion and mounting hardware. Replace them if they worn or damaged.

To Fasten the Belt

With gripper ① held and insert extrusion ② into buckle ③ until correctly latched.
Adjust the seat belt length according to your body size. Slightly pull the belt ④ and confirm the belt is fastened.

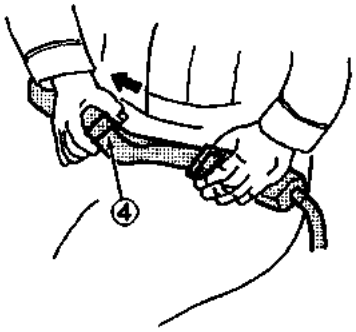

To Unfasten the Belt

Push in button ⑤ of buckle ③ and extrusion ② will be released from buckle ③.

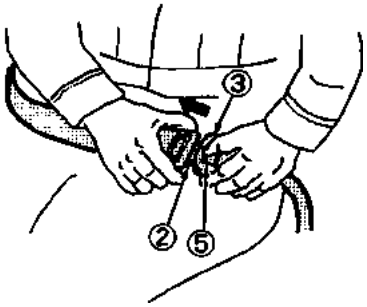

https://truckmanualshub.com/

2-3 BEFORE STARTING THE ENGINE

The following items should be checked each day before start-up or the start operations.

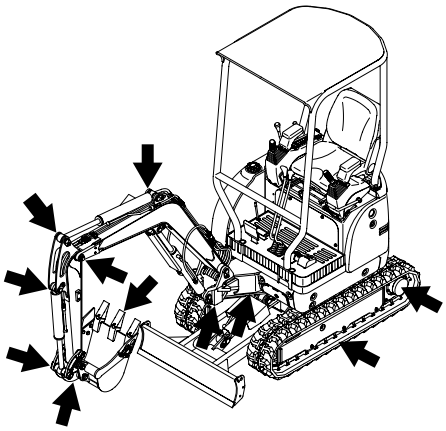

■ **Walk-Around Inspection**

Inspect the loose bolts, trash build up, oil or coolant leaks, broken or worn parts. Inspect the condition of the attachments and the hydraulic components.

Inspect the operator's compartment for cleanliness. Keep it clean.

Inspect any cracks in boom and arm pivot area and cylinder mounting brackets.
Repair if damaged.

Refer to Walk-Around Inspection in the Maintenance Section.

■ **Lubrication**

Perform the daily lubrication as required by the Lubrication Chart.

■ **Pre-start Checks**

Check all of oil, coolant and fuel levels.

Refer to the Daily in the Maintenance Section for more detailed information.

■ **Seat and Seat Belt Checks**

Adjust the seat to allow full travel of the levers and pedals when the operator is seated against the seat back.

Inspect the belt mounting hardware. Replace any damaged or worn hardware. Keep the mounting bolt tight.

Fasten the seat belt before starting the engine.

https://truckmanualshub.com/

2-8-1 BACKHOE OPERATION

Shown lever pattern A (ISO) type operations.

OPERATIONS	DIRECTION OF LEVER	DIRECTTON OF MACHINE
BOOM	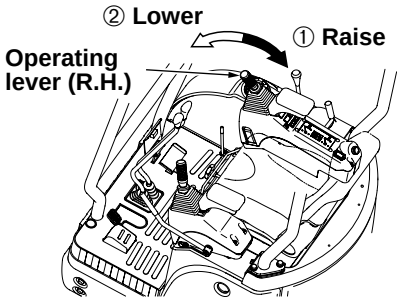	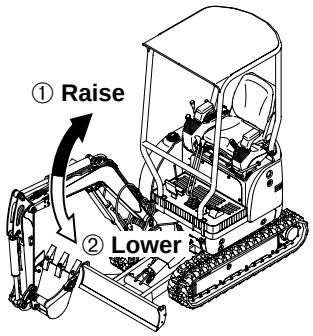
BUCKET	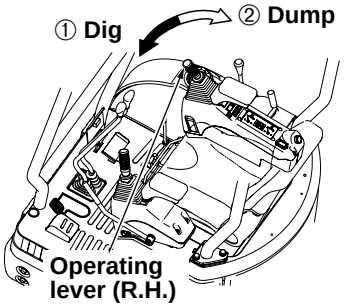	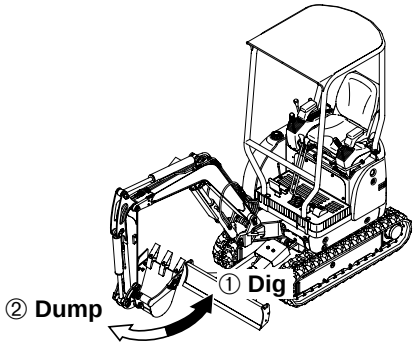
ARM	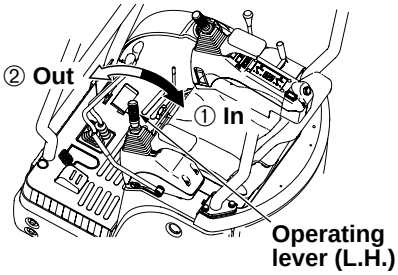	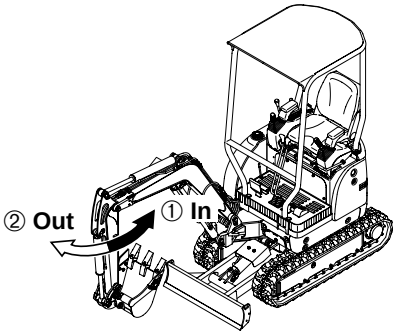
SWING	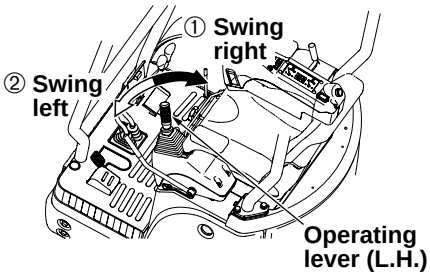	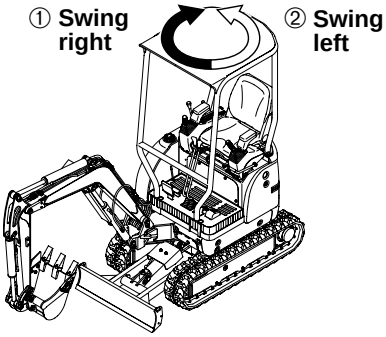

When leaving the operator's seat, stop the engine, lower the bucket and the blade on the ground.

https://truckmanualshub.com/

2 – 8 – 2 BACKHOE OPERATION (lever pattern “F”)

(17) LEFT OPERATING LEVER (LEVER PATTERN “F”)

Swing and boom controls.

1 Boom Lower:
Move the lever forward.

2 Boom Raise:
Move the lever rear.

3 Swing Right:
Move the lever right.

4 Swing Left:
Move the lever left.

5 Hold :
When the lever released from any position, the lever will return to hold in center position.

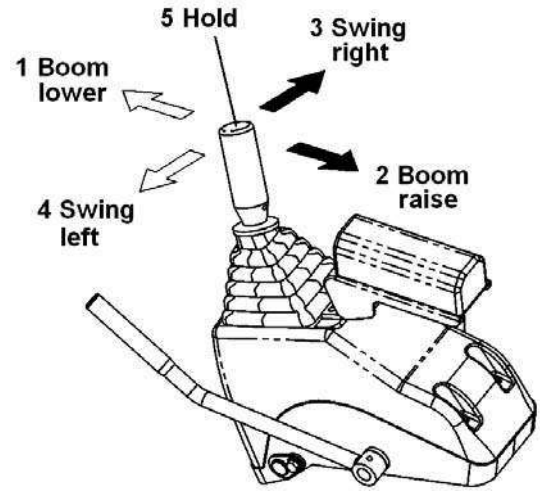

"F" pattern

The swing and boom functions can be oper together. For example, to move lower boom and swing right at the same time, push the lever forwards to the right.

(18) RIGHT OPERATING LEVER (LEVER PATTERN “F”)

Bucket and arm controls

1 Arm Out:
Move the lever forward to move arm out.

2 Arm In:
Move the lever back to move arm in.

3 Bucket Dump:
Move the lever right to dump the bucket.

4 Bucket Dig:
Move the lever left to close the bucket.

5 Hold:
When the lever released from any position, the lever will return to hold in center position.

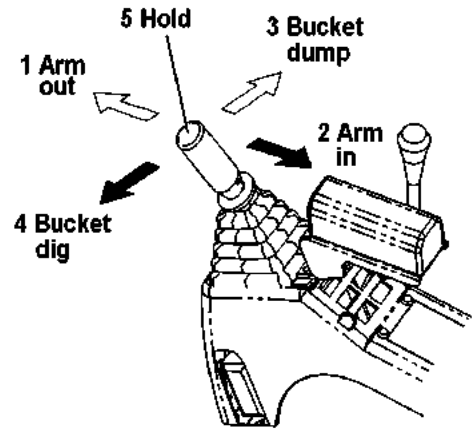

"F" pattern

The bucket and boom functions can be operated together. For example, to move out the boom and dump the bucket at the same time, push the lever forwards to the right.

https://truckmanualshub.com/

2-8-2 BACKHOE OPERATION

Shown lever pattern (F), SXtandard Backhoe Loader System.

OPERATIONS	DIRECTION OF LEVER	DIRECTTON OF MACHINE
BOOM	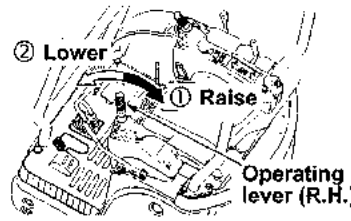	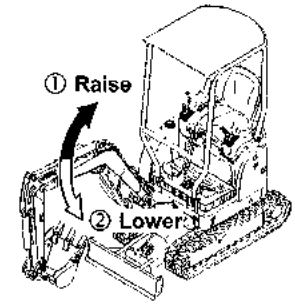
BUCKET	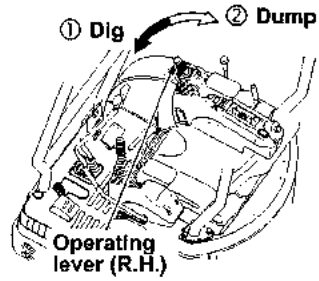	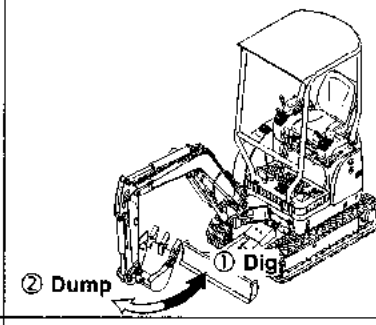
ARM	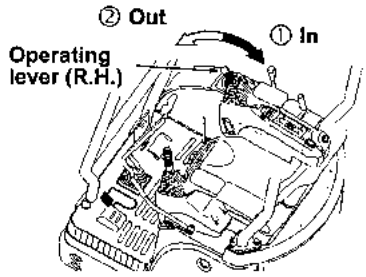	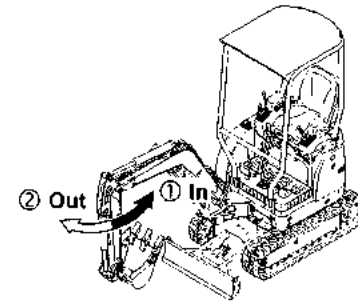
SWING	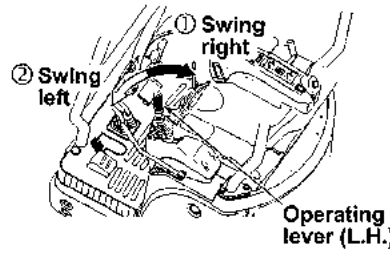	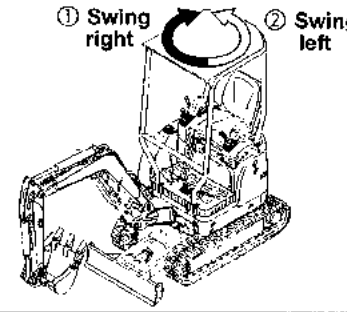

When leaving the operator's seat, stop the engine, lower the bucket and the blade on the ground.

https://truckmanualshub.com/

BACKHOE OPERATION

OPERATIONS	DIRECTION OF LEVER	DIRECTION OF MACHINE
BOOM SWING	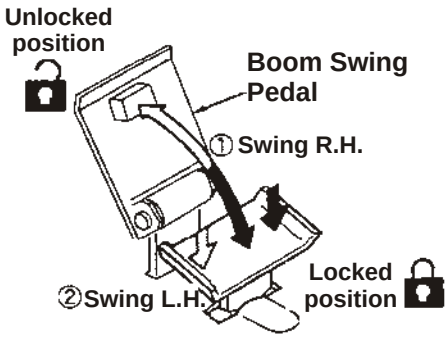	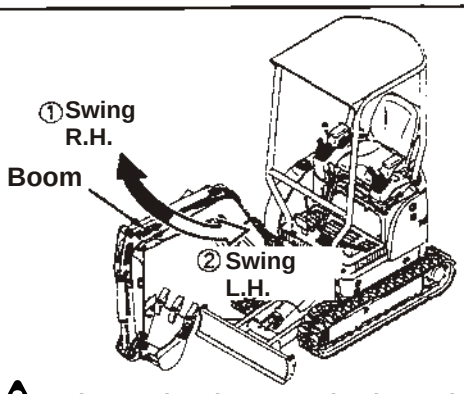 When no breaker operation is needed, be sure to lock the pedal.
BLADE	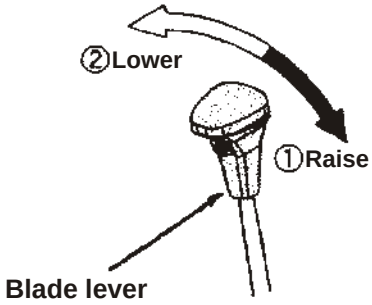	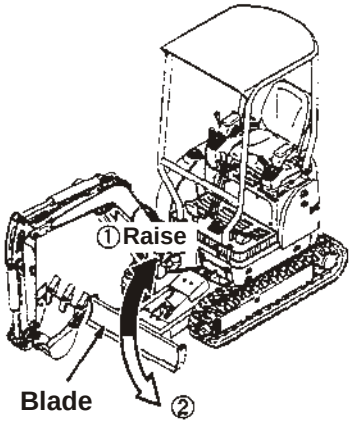
EXPANSION	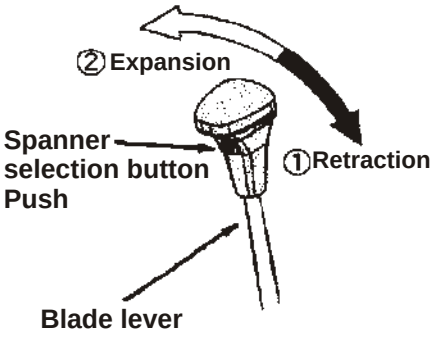	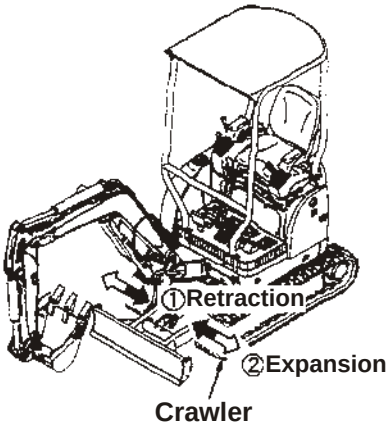

https://truckmanualshub.com/

2-9 OPERATING THE SPECIAL ATTACHMENTS AND ACTUATORS (If equipped)

CAUTION

* Select a hydraulic breaker. a wrecking fork and special actuators, etc., witch are applicable to the machine body.
  Consult your local IHIMER dealer to select a special attachment and an actuator.

Precautions on use of special attachment and actuator.

* Before using a special attachment and an actuator, read and understand their instruction manuals issued by a manufacturer to obtain correct operation and maintenance.
* When a special attachment and an actuator are mounted, the machine specifications such as stability, working radius, transport height, etc., should be altered. Before starting operation, confirm each specification to ensure safety of workers and the machine.

1. SINGLE ACTION OPERATION
Hydraulic Breaker and Others Controls

CAUTION

If the marked (–) of the valve is set in horizontal position, the pressure of returned oil becomes higher and the the breaker does not function efficiently.
ALWAYS set the marked (I) in vertical position.

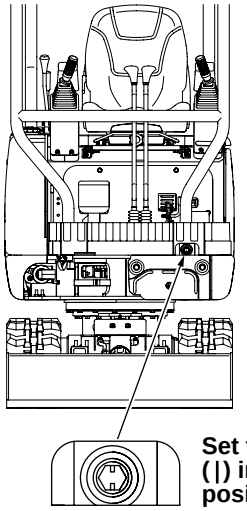

Switching the attachment hydraulic circuit.
Check the marked position on the shift valve ①.
Turn the valve with a wrench and set the marked (I) in vertical position, if necessary.

1) Fold the pedal ② into double layers.
2) Move the lock lever ③ to the unlocked position.

   Breaker ON : Push down the pedal ② to activate the breaker.
   Breaker OFF: Release the pedal ② to deactivate the breaker.

   NOTE: When no breaker operation is needed, be sure to lock the pedal ② by lock lever ③ to the **LOCKED** position.

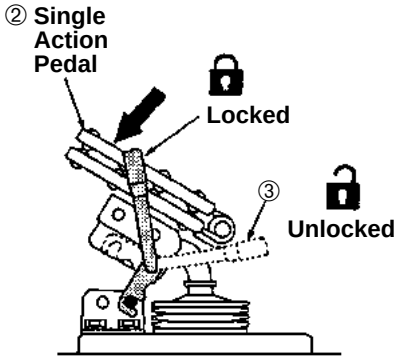

https://truckmanualshub.com/

CAUTION

Single action connectors are located on both sides of the arm (see picture). Connect high pressure hose (delivery) to the "A" port and low pressure hose (return) to the "B" port.

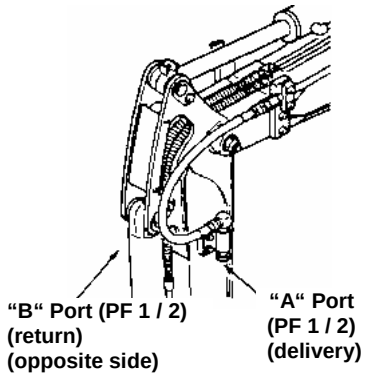

2. DOUBLE ACTION OPERATION
Wrench Fork and Others Controls

CAUTION

ALWAYS set the marked (–) in horizontal position. If the marked (I) of the valve is set in vertical position, the B port of the double action does not function efficiently.

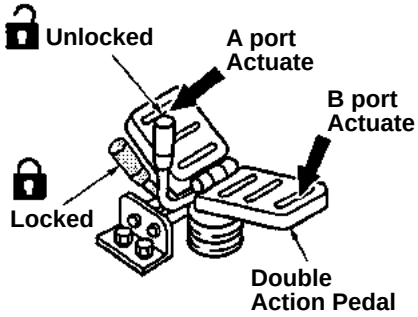

Switching the attachment hydraulic circuit.

Check the marked position on the shift valve ①.
Turn the valve with a wrench and set the marked (–) in horizontal position, if necessary.

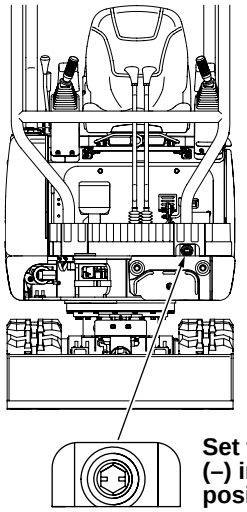

1) Unfold the pedal ②into two pedal plates.

2) Move the lock lever to the unlocked position.

To actuate the port A:

Push down on the front of the pedal ② to actuate the port A.

To actuate the port B:

Push down on the rear of the pedal ② to actuate the port B.

NOTE: When the power port is out of service, **ALWAYS** set the pedal back to the neutral position and pedal ② lock lever ③ to the **LOCKED** position.

CAUTION

Single action connectors are located on both sides of the arm (see picture).

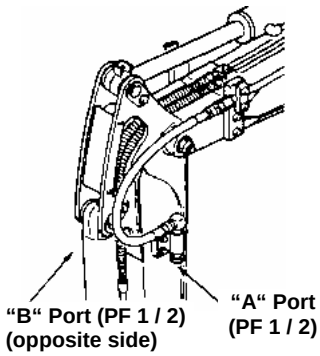

https://truckmanualshub.com/

2-10 TRAVELLING THE MACHINE

STRAIGHT TRAVEL

⚠ WARNING

* Be sure no one is working on or near the machine to prevent injury.
  Keep the machine under control at all times to prevent injury.
* Before control levers, confirm which direction the track frame faces.
* Always travel with sprockets under the rear of the machine.

1. Move engine throttle lever ① to the operating range.
2. Move the control shut-off lever ② to the unlocked position.
3. Raise the boom and the blade enough to provide sufficient ground clearance.
4. Control right and left travel levers ③ as follows.

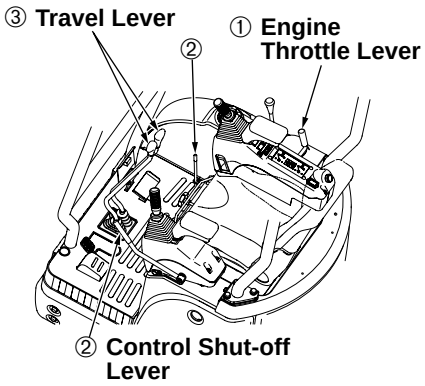

Forward Direction Travel
Move the both travel levers ③ forward to move the machine forward.
The machine will always travel toward the **BLADE.**

Stop
Slowly move both the travel levers ③ to the stop position to stop the machine and apply the brakes.

Reverse Direction Travel
Move the both travel levers ③ rear to move the machine reverse.
The machine will always travel toward the **SPROCKETS.**

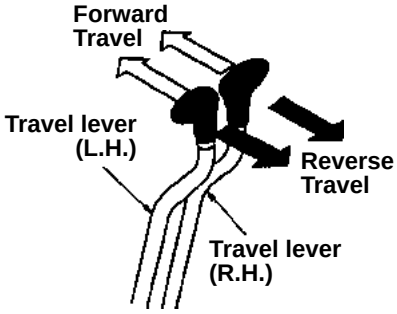

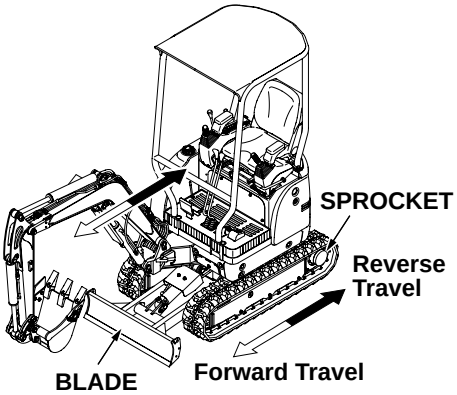

https://truckmanualshub.com/

STEERING

To make turns, control the travel levers.
Control the two travel levers as follows.

Pivot Left Turn

Move the right lever ① forward to travel forward and left, and move it rear to travel reverse and left, pivoting on the left track.

Pivot Right Turn

Move the left lever ② forward to travel forward and right, and move it rear to travel reverse and right, pivoting on the right track.

SPOT TURN

Spot Left Turn

Move the left travel lever ② rear and move the right lever ① forward at the same time. This allows a quick left turn.

Spot Right Turn

Move the right travel lever ① rear and move the left lever ② forward at the same time, allowing a quick right turn.

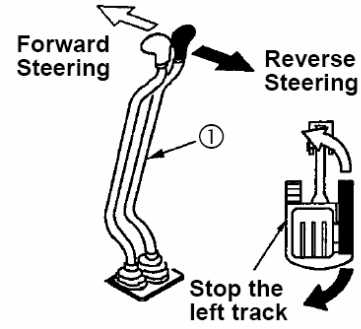

PIVOT LEFT TURN

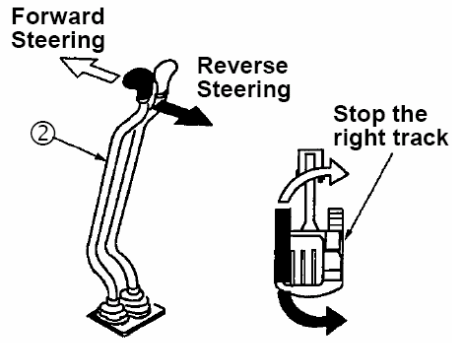

PIVOT RIGHT TURN

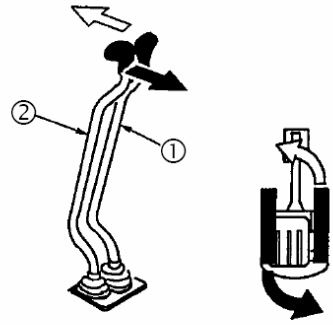

SPOT LEFT TURN

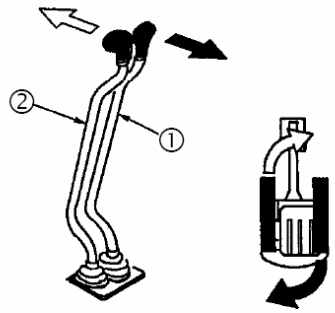

SPOT RIGHT TURN

https://truckmanualshub.com/

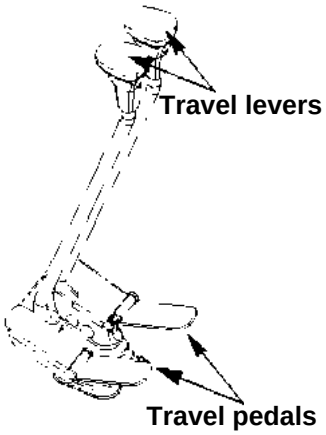

TRAVEL PEDALS

Travel levers are equipped of pedals that permit to drive machine without using hands. Especially useful to travel during digging operations.

HIGH SPEED TRAVEL

CAUTION

Do not change travel speed ranges while going downhill.
NEVER high speed travel on a grade or loading and unloading the machine.
When control shut-off lever is locked, does not shift to high speed travel.

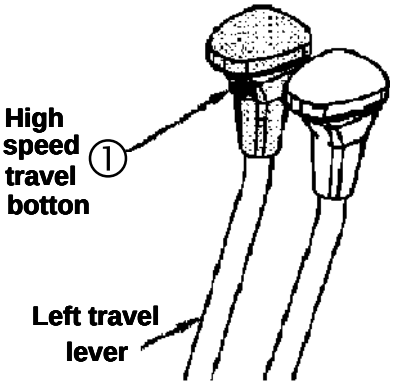

Push down the high speed travel button ① shift to the high speed travel.
When released button, shift to the low speed travel.

https://truckmanualshub.com/

CAUTION ON TRAVEL ON A GRADE

CAUTION

* Reduce engine speed when maneuvering in tight quarters or when breaking over a rise.
* Do not change travel speed ranges while going downhill.
* Work up and down slopes rather then sideways, whenever possible. Do not travel across a grade by all means.
* Avoid changing the direction of travel on a slope, which could result in tipping or side slipping of the machine.
* Keep the arm in and carry the boom in a low position.
* When starting up a steep grade or breaking over a rise, keep the boom lowered as close to the ground as possible.

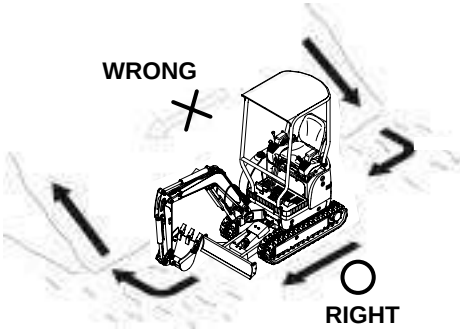

1. When traveling up on a grade inclining by greater than 15º, keep the position in the right illustration and travel with a low engine speed.

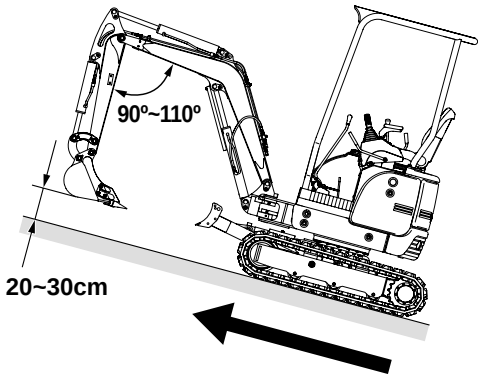

2. When traveling down on a grade inclining by greater than 15º, travel with the position in the right illustration.

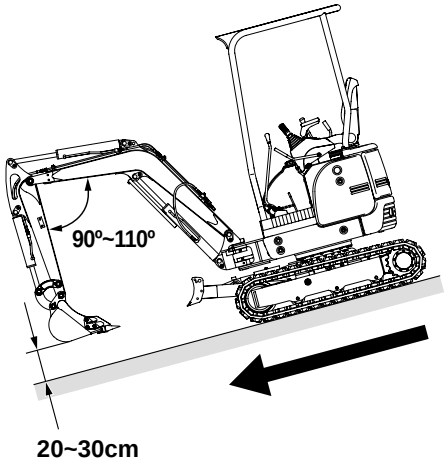

https://truckmanualshub.com/

2-11 CRAWLER EXTENSION/RETRACTION

This machine is equipped with the spanner mechanism (crawler extension / retraction mechanism). Take the following procedure.

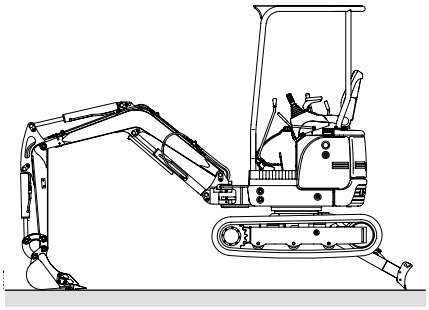

1. **Jack up the main unit.**
   Set the blade to the rear and jack up the main unit with the working device and blade cylinder till the crawler is off from the ground to extend or retract the crawler easily.

2. **Lever selection**
   Set the engine speed at medium or higher. Push and hold the button “spanner”. Move the blade-spanner lever forward or backward.

   - **Crawler extension :** Push the lever forward.
   - **Crawler retraction :** Pull the lever backward.

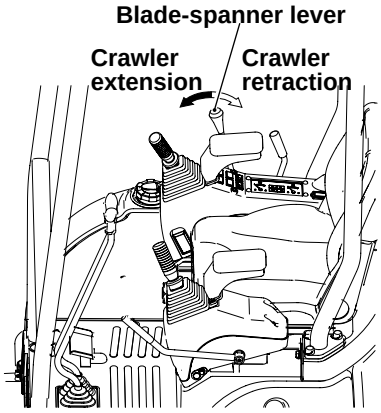

3. During expansion swing and lock blade extensions on both sides of standard blade. This is possible only if pivot is moved from position (A) to position (B). During crawler retraction put blade extensions in original position and lock them.

⚠ CAUTION

Extend or retract the crawler on a level ground without an obstacle.
Extension or retraction is possible without jacking up the main unit.
If there is an obstacle on the ground beside the crawler, the resistance is larger and extension or retraction is sometimes impossible.

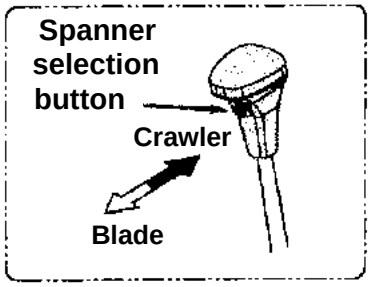

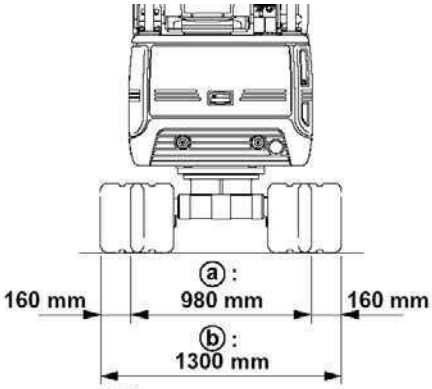

ⓐ : Dimension of crawler retraction
ⓑ : Dimension of crawler extension

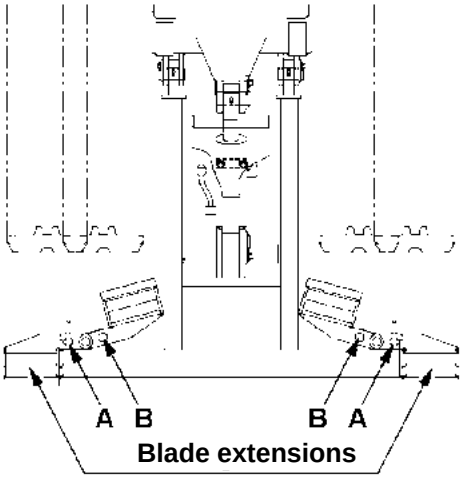

https://truckmanualshub.com/

2-12 TOWING

⚠ WARNING

* Personal injury or death could result when towing a disabled machine incorrectry.
* Follow the recommendations below, to properly perform the towing procedure.
* Never use the towing hook at the rear axle to tow the machine.
* During towing operation, **NEVER** allow anyone between the towing machine and the towed machine.
* Quick machine movement could overload the tow line or bar and cause it to break. Gradual and smooth machine movement will work better.
* Keep the tow line angle to a minimum. Do not exceed a 30º angle from the straight ahead position.

1. If the machine sinks down on a soft ground and cannot crawl up by itself,, a wire rope should be attached to the rear axle and the machine should be towed by a towing machine.
   To prevent the damage of the wire rope, be sure to place a protector at the corner of the axle.
   Use the towing wire rope with sufficient strength to tow the machine.

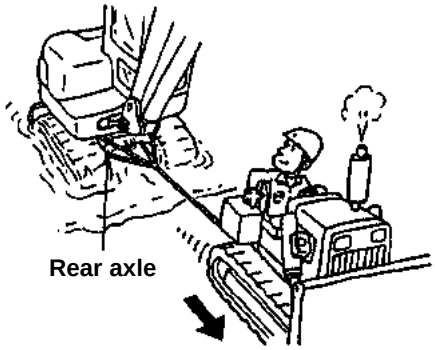

2. Use of the towing hook
   The towing hook is used to tow for lightweight material. The maximum allowable towed weight is 500 kg.
   NEVER tow the machine with the towing hook, which may damage the towing hook and cause a personal injury.

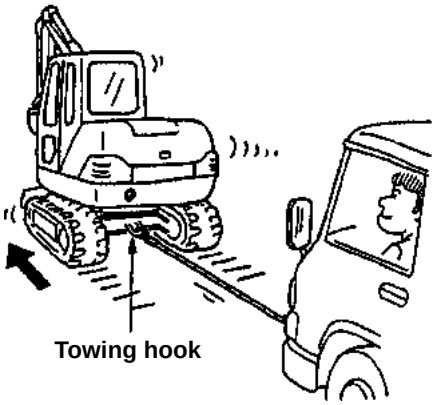

https://truckmanualshub.com/

2-13 LIFTINGTHE MACHINE

⚠ WARNING

Improper lifting or tie downs can allow load to shift and cause injury or damage.

* Use proper rated cables and slings for lifting. Lifting cables should have sufficient length to prevent contact with machine.
* Position crane for level machine lift.
* **NEVER** lift the machine loaded with any personnel.
* Use guide or tag lines to prevent the machine from swinging or turning.
* Be sure to use are wire ropes with breaking force of greater than 10 tons.

Lifting Procedures

1. Startthe engine and swing the machine to position the blade to rear.
2. Position the machine on the level ground with the boom, arm and bucket cylinders fully extended.
3. Position the boom at the center of the machine with the boom swing pedal.
4. Stopthe engine.
5. Instau the cables to the two lifting eyes on the blade with shackles.
   Install the cable to the lifting eye on the boom of the center with shackle.
6. Install the cables to the crane hook.
7. Confirm that no obstacles nor personal are around the machine and have the operator leave the machine.
8. Once the machine is lifted off the ground, check that the machine is well balanced.

Machine mass (kg)

Shoe type	STD	ADD Weight
Rubber shoe	1620	1720
Steel shoe	1680	1780

⚠ CAUTION

Selection of the lifting cables: Be sure to use are wire ropes with breaking force of greater than 10.0 tons.

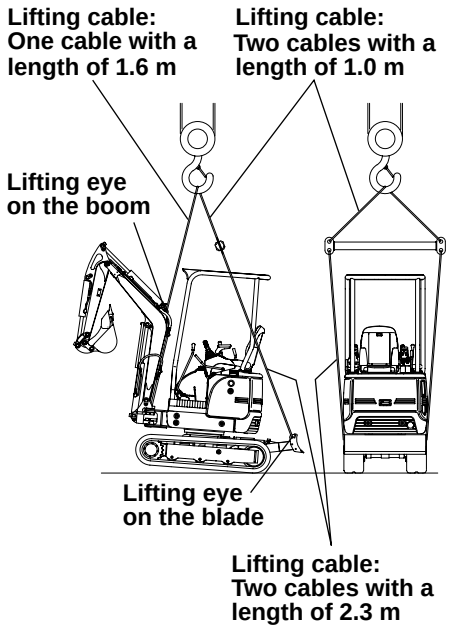

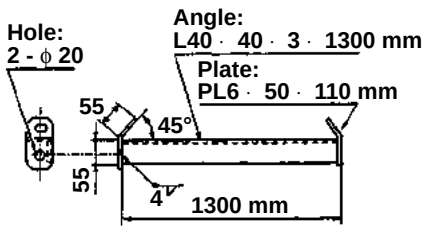

Details of a lifting jig

https://truckmanualshub.com/

2-14 LOADING AND UNLOADING THE MACHINE

⚠ WARNING

* Choose as flat ground as possible for loading the machine.
* When using loading ramps, be sure there is adequate length, width, firmness and slope.
* To prevent the machine from slipping while loading or transport, remove ice, snow or other slippery material from the loading ramps and the truck bed before loading.
* **NEVER** operate the high speed travel switch when loading the machine on a trailer or loading lamps.
* Perform warm-up the machine before loading and unloading under cold weather.
* Do not raise the boom excessively at loading and unloading.
* **NEVER** make a turn on a ramp. To make a turn, get off the machine from the ramp first.

MACHINE LOADING ONTO A TRUCK.

1. Block the truck wheels before loading.
2. Install the loading ramps to the truck securely. Maintain the slope of loading ramps within 15 degrees.
3. Position the machine so that it can be run straight on the loading ramps. Never operate control levers other than the travel lever while machine is on the lading ramps.
4. Maintain the machine balance point while traveling over the loading ramp joint areas.
5. Lower the attachment to the bed of truck.
6. Be sure to chock both tracks.

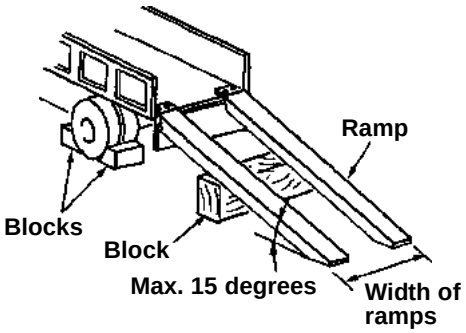

Typical Example

SECURING THE MACHINE

⚠ WARNING

Upper structure movement can cause personal injury or death.

1. Align the upper structure with the truck.
2. Move the control shut-of lever to the **LOCKED** position.
3. Turn the engine start switch of **OFF** to stop the engine and remove the key.
4. Block the tracks and secure the machine with tie-downs. Install and fasten proper rated wire rope cables located on the car body and arm point.

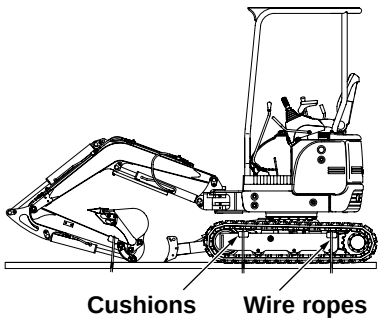

https://truckmanualshub.com/

2-15 PRECAUTION ON USE OF RUBBER TRACK SHOE

CAUTION

The rubber track shoe may be damaged or worn faster depending on working conditions. Perform working operation properly according to working site conditions and machine operation.

■ Structure of Rubber track Shoe

The right illustrates the structure of rubber track shoe. It consists of steel cord to sustain tension, iron core to support it, and covering rubber to them.

CAUTION

If a crack reaches the steel cord, of may be rusted and cut off by moisture.
When any crack is detected, repair it immediately with vulcanizer.

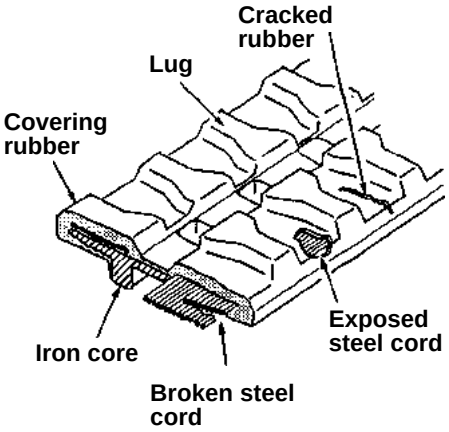

Typical Example

■ Precaution on Use

1. Adjust the track often enough to keep a proper tension.
   - Insufficient tension slips off the rubber track shoe and wears out the sprocket and iron core extremely.
   - Excessive tension increases travel resistance, which prevents proper travel force and speed. it also causes damages and extreme wear at undercarriage as well as overextension of the rubber track shoe.
2. To prevent damages of the rubber track shoe, avoid the following in travel as much as possible.
   - Pointed rocks or quarry
   - Craggy place such as riverbed or path through woods
   - Steel rods or scraps
   - Steel board or cornered objects of concrete
   - Heat source such as acre
   - Travel in contact with concrete path or wall
3. Immediately wipe off spilt fuel, hydraulic oil, or grease on the rubber track shoe with a cloth.
4. Avoid sudden spot turns or pivot turns. Make slow turns several times at a low speed.
5. Do not use for long (3 months or more). Store it to avoid direct sunlight or rain.
6. Use the rubber track shoe at a temperature between –25ºC and +55ºC (–13ºF and 131ºF) because of a rubber's characteristic.

https://truckmanualshub.com/

2-16 BOOM LOWERING WTTH THE ENGINE STOPPED

■ Method of Boom Lowering When Engine Damaged.

⚠ WARNING

Be sure no one is under or the front implements before manually lowering the boom.
Keep all personnel away from the boom area when lowering the boom with engine stopped.

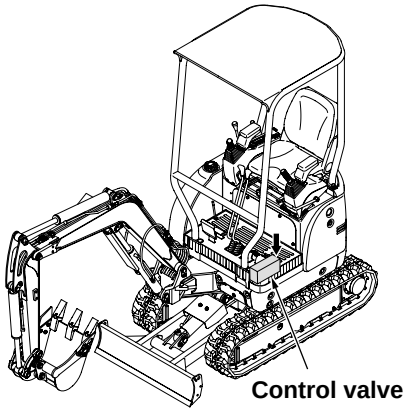

Use the following procedure when it is necessary to lower the boom while engine is shut down or the hydraulic system disabled.

1. Remove the floor cover under the operator's station floor.
2. Remove the lock nut ② of the boom raise relief valve located inside the control valve ①.
3. Slowly loosen adjusting screw ③ until boom start lower. The boom will start to lower slowly.
4. After making sure that the front implement has lowered completely on to the ground, install the lock nut ②.
5. Make any necessary repairs placing the excavator back into service.

NOTE: For further information, contact your dealer.

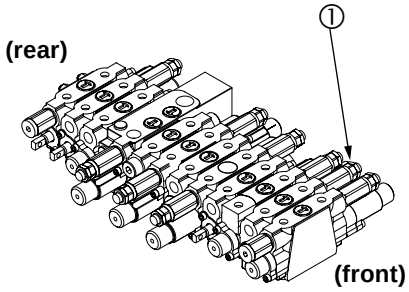

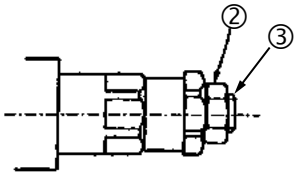

Boom raise relief valve

https://truckmanualshub.com/

2-17 PARKING THE MACHINE

At the end of a day's work, following steps should be observed as the established machine shut-down procedure:

Machine Stopping

Park on a level surface, if necessary to park on a grade, block the tracks securely.

1. Move engine throttle lever forward to reduce the engine speed.
2. Release the travel lever to stop the machine.
3. Lower the bucket to the ground and apply slight down pressure.
4. Move the control shut-off lever to the **LOCKED** position.

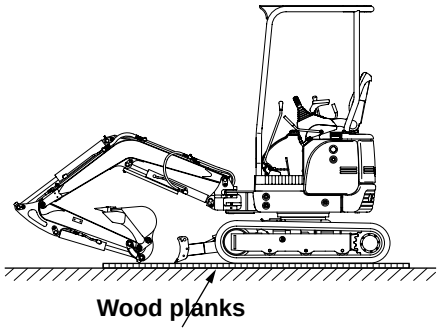

Freezing Conditions

If freezing temperature are expected, each crawler frame should be cleaned of mud and dirt and the machine parked on wood planks.

Engine Stopping * Does not apply

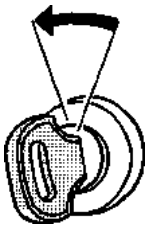

Leaving the Machine

1. Use the steps and handhold, use both handles and face the machine, when dismounting.
2. Inspect the entire machine for leaks, loose connections, signs of wear, crack etc. Report any signs of trouble discovered during this inspection.
3. Close and lock the doors.

2-18 EMERGENCY ENGINE STOP

To stop the engine in emergency, push emergency stop switch.

https://truckmanualshub.com/

3 MAINTENANCE

MAINTENANCE INTERVALS

*Engine and fuel tank maintenance does not apply

Check Point	Item	Page
When Required		
Tracks	Check and Adjust Tension	3 – 4
Track	Rubber track shoe mantenance	3 – 5
Fuses	Replace	3 – 6
Fusible Link	Replace	3 – 6
Battery	Mantenance * Does not apply	3 – 7
Bucket	Change Bucket	3 – 8
Daily Check (8 Service hours)		
Engine Oil	Check Oil Level	3 – 9
Engine Coolant	Check Coolant Level	3 – 9
Hydraulic Tank	Check Hydraulic Oil Level	3 – 10
Fuel Tank	Check Fuel Level	3 – 10
Air Cleaner	Check Service Signal	3 – 10
Water Sedimenter	Check Level and Drain Water	3 – 11
Every 50 Service Hours (First perform previous service hour items)		
Fuel Tank	Drain Water and Sediment	3 – 13
Attachment Pins	Lubricate Fitting with Grease	3 – 2
Swing Bearing	Lubricate Fitting with Grease	3 – 2
Engine Oil	Change Oil and Finer *	3 – 14
Hydraulic System	Change Return Filter *	3 – 21
Every 250 Service Hours (First perform previous service hour items)		
Engine Oil	Change Oil and Filter	3 – 14
Air Cleaner	Clean or Change Filter Elements	3 – 15
Fuel Filter	Clean Filter Element	3 – 18
Fan Belt	Inspect and Adjust	3 – 19
Engine Coolant	Change Coolant (When not used L.L.C)	3 – 27
Every 500 Service Hours (First perform previous service hour items)		
Tighten Bolts	Retightening Bolt	3 – 20
Return Filter	Change Retuen Filter	3 – 21
Fuel Filter	Change Filter Element	3 – 22
Travel Drive	Check Oil Level	3 – 23
Every 1000 Service Hours (First perform previous service hour items)		
Travel Drive	Change Gear Case Oil	3 – 24
Hydraulic Tank	Change Hydraulic Oil and Clean Strainer	3 – 25
Every 2 years Service Hours		
Engine Coolant	Change Coolant (When used L.L.C)	3 – 27

* Interval given applies only to initial period of use (Break-in).

CAUTION

ALWAYS USE IHIMER ORIGINAL SPARE PARTS, IN ORDER TO A PROPER WORKING OF THE MACHINE.

https://truckmanualshub.com/

3 MAINTENANCE

3-1 LUBRICATION CHART MAINTENANCE AND CHECKS

The interval of lubrication, maintenance and check is the maximum interval indicated by the hour meter. It should be shortened in service operating conditions.

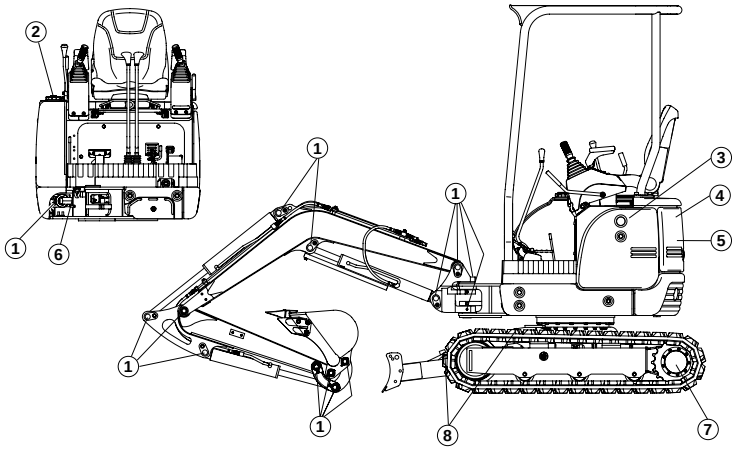

Check points		Check items	Check intervals					
			Initial period of use After 50 hours	Daily	Every 50 hours	Every 250 hours	Every 500 hours	Every 1000 hours
①	Attachment pins	Lubricate with grease "G"			○			
③	Hydraulic tank	Drain water and sediment			○			
		Wash and clean strainer						○
④	Return filter	Change filter	●				●	
⑤	Engine							
		Change oil filter	●			●		
		Clean or Change air filter		○		○		
		Check coolant level "W"		○				●
⑥	Swing bearing	Bearing-lubricate with grease "G"			○			
		Ring gear-lubricate with grease "G"			○			
⑦	Travel drive	Check oil level and change oil "L"	○				○	●
⑧	Blade	Lubricate with grease "G"			○			

Symbol	G	L	H	E	W	O	O
Remarks	Grease	Gear oil	Hydraulic fluid		Coolant	Check / Maintenance / Supply	Change
	EP-2 Lithium grease	API • GL-4, GL-5 ISO-VG320	Wear-proof hydraulic fluid ISO-VG46	PI • CD SAE 10W30			

https://truckmanualshub.com/

3-2 RECOMMENDED LUBRICANT TABLE

LOCATIONS	REFILL CAPACITIES (APPROXIMATE)	CHANGE INTERVALS	USE	LUBRICANT VISCOSITIES
*Does not apply	ax. 3.0 liter Min. 2.0 liter	250 Hrs. Initial oil change 50 hours	Cold Regions	
			General	API, Class CD SAE30
			Tropical Regions	API, Class CD SAE40
Hydraulic Oil	Total Amount 23 liter Tank Capacity 19 liter	1000 Hrs. (600 Hrs. when breaker used)	Ambient Temperature – 5 ºC	Wear Proof Hydraulic Fuluid ISO – VG 46
			Ambient Temperature Below – 5 ºC	Wear Proof Hydraulic Fuluid ISO – VG 32
Track Rollers	0.025 liter (Each)	Upon occasion	–	API, GL – 4 or GL – 5, ISO – VG 320 (SAE 90) Gear Oil
Front Idlers	0.07 liter (Each)	Upon occasion	–	
Travel Drives	0.33 liter (Each)	1000Hrs.	–	API, Class CD SAE30
Lubricate the Fitting	Swing Bearing, Attachment pins, etc.		–	EP2 Lithium Grease

Note:

1. Oils in the hydraulic fluid columns marked with *should be use above 0 ºC.
2. If the oil becomes dirty or deterioration of the oil's properties are excessive, replace more frequently than described above.
3. Disassemble the track roller and upper roller when replacing the oil in them.

https://truckmanualshub.com/

3-3 WHEN REQUIRED MAINTENANCE AND CHECKS

TRACKS CHECK / ADJUST

⚠ WARNING

* Grease is under high pressure.
* **NEVER** remove the grease fitting.
* Grease coming out of the check valve under pressure can penetrate the body causing injury or death.
* **DO NOT** watch the check valve to see if grease is escaping. Watch the track or track adjustment cylinder to see if the track is being loosened.
* Loosen the check valve one turn only.

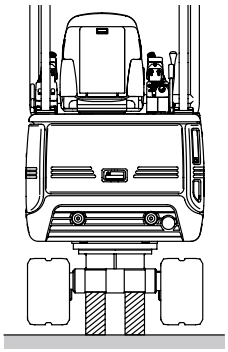

Suported the machine

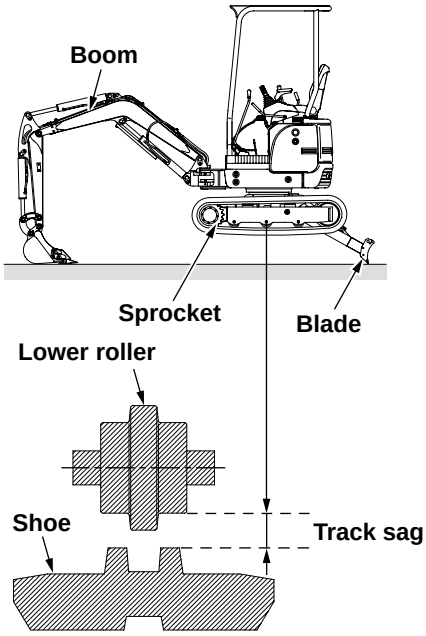

Rubber shoes: 10 to 20 mm
Steel shoes: 30 to 50 mm

■ **Measuring Track Tension**

1. Position bucket to the sprocket side. Use boom and blade down pressure to lift the track on both side off the ground.
2. Measure the maximum amount of the track sag from the shoe upper face to the roller face. Properly adjusted track will have approximately 10 to 20 mm slack with rubber shoes. In case of steel shoes, approximately 30 to 50 mm.

■ **Track Tightening**

1. Add grease through check valve fitting ① until the correct track tension is reached.
2. Move the tracks forward and reverse to equalize the pressure.
3. Check the the amount of track sag again and adjust as necessary.

■ **Track Loosening**

1. Remove soil deposited on front idler bearing.
2. Loosen the check valve ② carefully (one turn maximum) until the track begins to loosen.
3. Tighten the check valve ② to 59 to 69 N • m (6 to 7 kgf • m) when the desired track tension is reached. **NEVER** over tighten the check valve.
4. Move the tracks forward and reverse.
5. Check the the amount of track sag again and adjust as necessary.

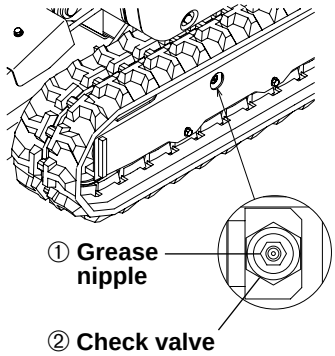

If the correct adjustment cannot be obtained, consult your IHIMER dealer.

https://truckmanualshub.com/

RUBBER TRACK SHOE MAINTENANCE

CAUTION

* Rubber track shoe should be repaired or replaced under the next conditions.
* If is necessary to repair or replace it, consult your IHIMER dealer.

(Typical Example)

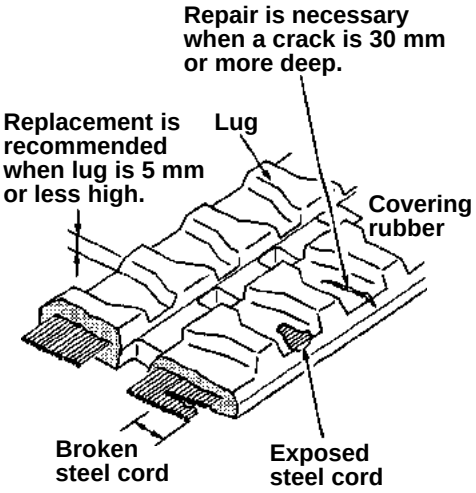

1. **Height of lugs**
   The rubber track shoe can be used even if it is worn, however, if it is excessively worn, the rubber track shoe is likely to be slippery and more travel force is required. If the remaining lug is less than 5 mm high, replace it with brand-new one.

2. **Exposure of Steel Cords**
   If steel cord is exposed because of weary rubber or damage, replace it with brand-new one.

3. **Break of Steel Cords**
   When break of steel cord is detected, replace it immediately. If you leave it as it is, the rubber track shoe can be break without expectation, which causes a serious accident.

4. **Crack of Covering Rubber**
   If a crack is 30 mm or more long and 8 mm or more deep, repair the cover immediately. if Steel cord appears even if a crack is small, repair it immediately.
   Otherwise, water may come into a crack, which rusts steel cords and break the rubber track shoe.

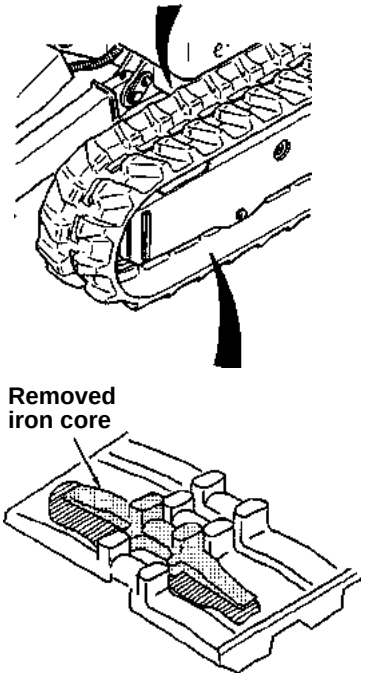

https://truckmanualshub.com/

FUSES

The fuse box is located on the front of the instrument panel.

Fuses will protect the electrical system from damage caused by overloaded circuits.

Replace fuses with the same type and size only. Otherwise, electrical damage can result.

Change a fuse, have the circuit checked and repaired.

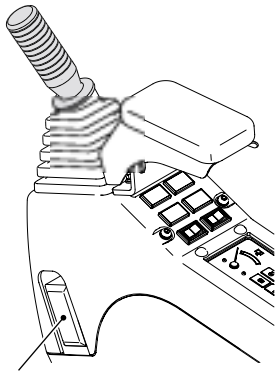

■ **Replace**

1. Pull the latch and remove the cover for fuse access.
2. Change the damaged fuse to new one.

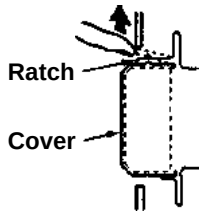

The following circuit protected by each fuse includes the fuse amperage.

① Fuel pump, Control shut-off and Travel speed shift solenoid – 10 amps

② Horn, Lighter plug and Cab dome light – 20 amps

③ Front light – 20 amps

④

⑤

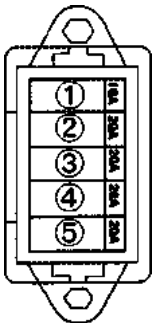

Fuse amperage

FUSIBLE LINK * Does not apply

The fusible link is provided between the positive terminal of the battery and the starter switch to prevent electrical circuit wires from being burned because of short circuit. When the power is turned off by short circuit, check the fusible link.

When it is blown out, replace it with new one after repairing the wires.

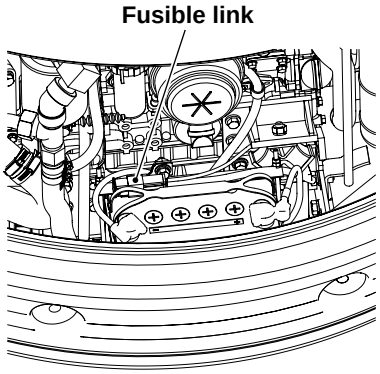

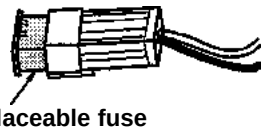

(Typical Example)

https://truckmanualshub.com/

CHANGE THE BUCKET

CAUTION

* Bucket pins, when struck with force, can fly out and injure nearby persons. Make sure the area is clear of people when driving bucket pins.
* Wear protective glasses when striking a bucket pin to avoid injury to your eyes.
* Chips or other debris can fly off objects when struck. Make sure no one can be injured by flying debris before striking any object.

■ Remove the Bucket

1. Place the bucket in a stable position.
2. Move the O-rings from the regular position to the bucket boss.
3. Remove the pins of section A and B, then remove the arm and the bucket.

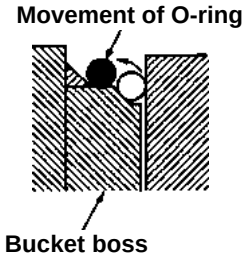

■ Install the Bucket

1. Clean the removed pins and pin holes and apply coat the grease to them surface.
2. Place a new bucket in a stable position as illustrated.
3. Connect the arm into the hole A, and the link into the hole B with pins.
4. Install a stopper bolt to each pin securely.
5. Adjust the bucket clearance.
6. Move the O-rings for sealing into the regular position.
7. Lubricate each pins with grease.
8. After install the bucket, start the engine and low speed rotate the bucket to the stroke end. Check if anything interrupts the bucket rotation.

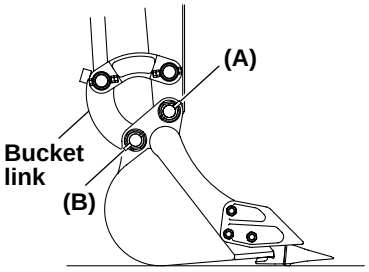

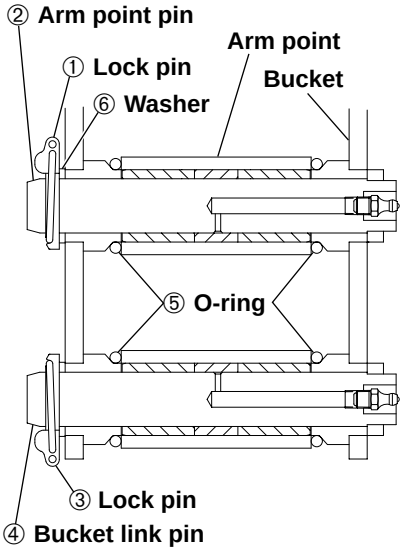

https://truckmanualshub.com/

■ Hydraulic Oil Level

⚠ CAUTION

* Always clean around fill plug before removing.
* **DO NOT OVER FILL.**
* **DO NOT OPERATE** the machine when oil level is above **FULL** *(H)* or **ADD *(L)*** marks.

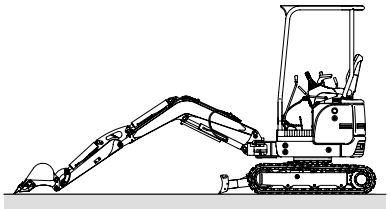

Bucket position at the time of checking the hydraulic oil level.

1. Place the machine on level ground and lower the bucket to the ground, with the arm and bucket cylinders fully retracted, as shown.

2. Maintain the oil level between the **FULL *(H)*** and **ADD *(L)*** marks on the level gauge.

3. Slowly loosen the fill plug o relieve any and remove it to add oil if necessary.

4. Clean and install the fill plug. To pressurize the hydraulic tank, refer to “Change Hydraulic Oil” section.

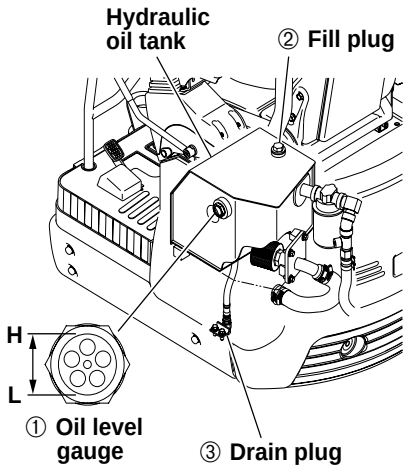

■ Fill Fuel Tank * Does not Apply

Fuel can be added to the tank by removing the fill cap on top of the fuel tank. Do not remove strainer in the fill port when fill fuel tank.
After completion of refueling, be sure to lock the fuel tank cap to protect against vandalism.

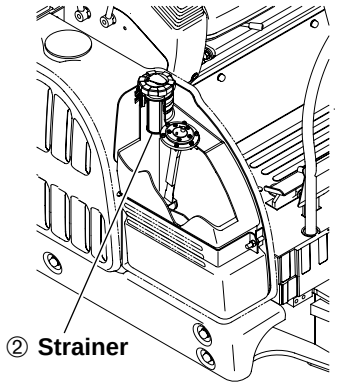

■ Dust Indicator *Does not apply

Check the air filter dust indicator. If the indicator is in the red zone, clean or replace the element.
See Service the Filter Elements.

After servicing, reset the dust indicator pushing in the reset button.

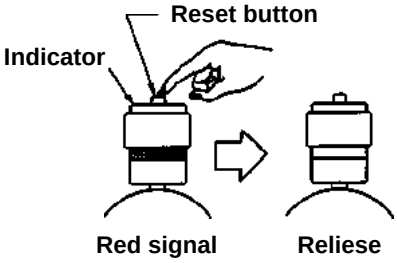

https://truckmanualshub.com/

Walk-Around Inspection

Inspect the operator's compartment for cleanliness. Keep it clean.

Inspect the loose bolts, Tighten any loose bolts. Repair if necessary.

Inspect any cracks in boom and arm pivot area and cylinder mounting brackets.
Repair if damaged.

Inspect attachment cylinders, linkage and bucket for damage or excessive wear. Repair if damaged.

Inspect and remove any trash build up in the engine compartment.

Inspect the cooling system for leaks, faulty hose and trash built up. Correct any leaks and remove any trash from the radiator.

Inspect the hydraulic system for leaks. Inspect the tank, cylinder rod seals. tubes, plugs, joints and fittings. Correct any leaks.

Inspect and repair travel drive leaks. Check oil level if leakage is noticed.

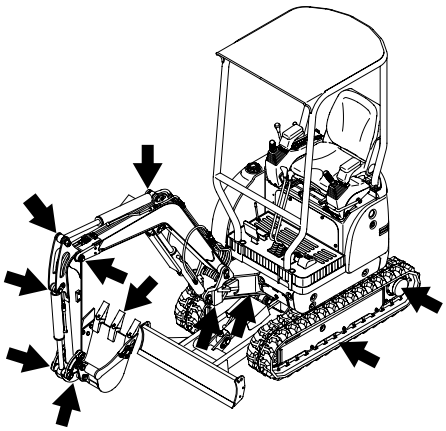

Daily Lubrication

Perform the daily lubrication as required by the Lubrication Chart.

https://truckmanualshub.com/

■ Service the Filter Elements

⚠ CAUTION

* Service the air cleaner if indicated the red signal in the dust indicator with the engine running at high idle.
* Service the air cleaner only with the engine stopped to prevent engine damage.
* Do not clean the filter elements by bumping or tapping them.
  Do not use filter element with the damaged pleats, gaskets or seals.
  Engine damage could result.
* When using pressure air for cleaning, wear a protective face shield or protective grasses.

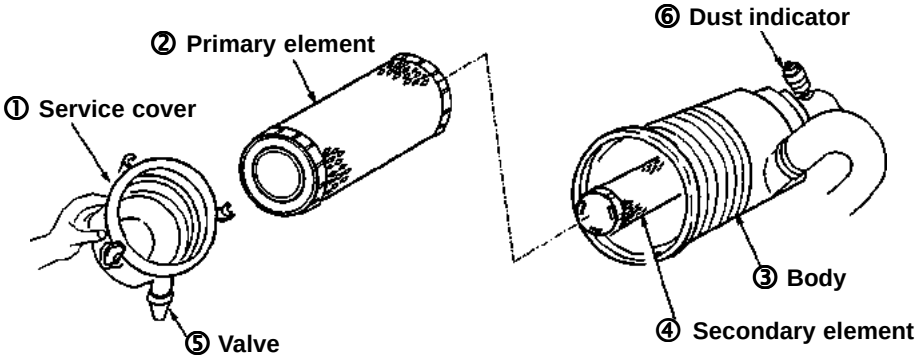

Service the Primary Element

Cleaning : Every 250 hours or when indicated the red signal in the dust indicator.
Replacement : After cleaning five times, after one year or damaged pleats or seals.

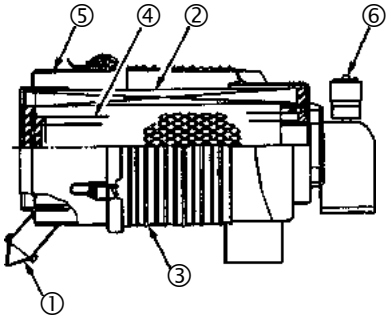

1. Stop the engine.
2. Release the three latches and remove the service cover ①.
3. Remove the primary element ② from the air cleaner housing ③. Do not remove the secondary element テ, when service the primary element ② only.

NOTE: Remove the seal unit of element gently. The element is radially sealed by the element seal unit and seal tube. To loose the seal unit, move the outer of element gently up and doun or right and left or turn the element to remove it.
Take out the element not to scatter dust.

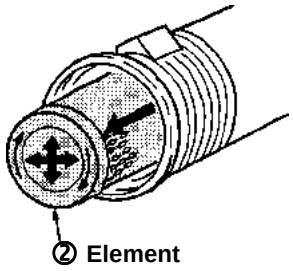

4. Clean the inside of the cleaner housing ③ and service cover ①.

https://truckmanualshub.com/

3-7 500 HOURS MAINTENANCE AND CHECKS

First perform previous service hour hems

■ **Check the Fixed BoltTorque**
When loosened bolt or nut is found at daily check, tighten it with torque specifications table.

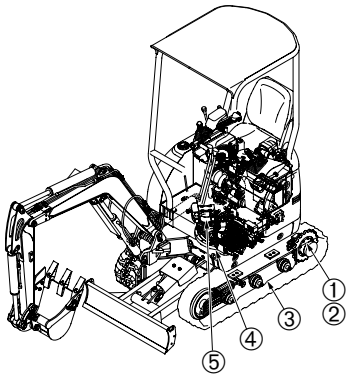

1. **Special torque specifications**
Special tighten is applied for main bolts as illustrated below.
When replacing bolts, appbl molybdenum grease to bolts, nuts, and bearing surface of nuts.
Then, tighten them with speciBed torque.

Items	Tighten point	Wrench size metrie	Thread size (mm)	Tighten torque N•m
①	Travel drive	Bar 8	M10	55
②	Sprocket	Bar 8	M10	55
③	Lower roller	19	M12	108
④	Swing bearing	19	M12	108
⑤	Swing motor	Bar 10	M12	108

Newrton meter (N•m) is approximately the same as 0.1 kg•m

2. **General torque specifications**
Other than above-mentioned, refer the next table for torques.

Thread size metric	Wrench size (mm)	Tighten torque	
		Metric coarse H.T.	Metric fine H.T. bolt
		N•m	N•m
M8	13	23	25
M10	17	47	50
M12	19	83	91
M14	22	134	135
M16	24	206	220
M20	30	412	450
M24	36	715	813

High pressure-hose union nut	
Hose size (inch)	Tighten torque
	N•m
1/4”	25
3/8”	49
1/2”	59
3/4”	118
1”	137
1-1/4”	167

https://truckmanualshub.com/

■ Change the Retum Filter

CAUTION

* Hot oll and components can cause personal injury. Do not amow hot oil or components to contact the skin.
* At operating temperature, the hydraulic tank is hot and can be under pressure,
* To relieve the pressure from the hydraulic tank, loosen the oil fill plug ① on the hydraulic tank.
* Remove the retum filter ③ onbl after the engine has been slopped and the retum filter Is cool enough to touch with your bare hand.

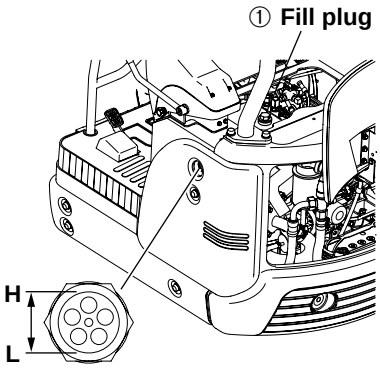

Level gauge

1. Lower the bucket on the ground and stop the englne.
2. Relieve the internal pressure from the hydraulic tank by loosening oil fill plug ①.
3. Clean the areato keep dirt out ofthe flKer base ②.
4. Remove the used finer ③ by finer wrench. Clean the fiPter base ②.

NOTE: This is a cartridge type element. It cannot be reused.

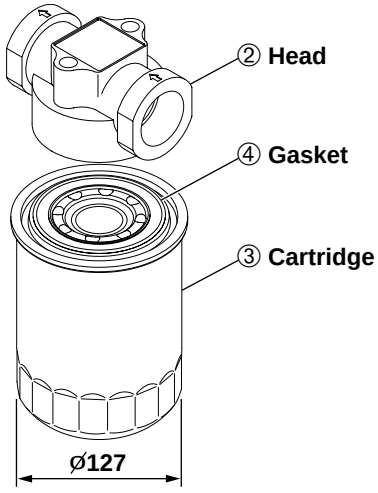

Return filter

5. Coat the gasket ④ of new finer with clean hydraulic oil.
6. Install the new finer ③ by hand. When the seal contacts the base. tighten an additfonal 3/4 turn by filter wrench.
7. Start and run the engine to fill the fiPter. Stop the engine. Maintain the oil Ievel between marks on the level gauge. Add oil if necessary.
8. Pressurize the hydraulic tank. After MTy extending all the cylinders and loosen oil fm plug ① to supply air to the hydraulic tank, tighten the plug again.
9. Start and operate the engin. Inspect for leaks on the oil filter ③.

☆ When operation breaker works, replace the retum filter every 100 hours operation.

☆ Replace this finer in 50 hours for the initial time only.

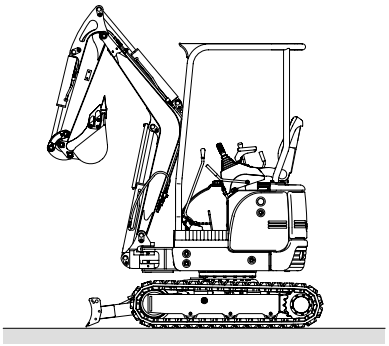
Bucket position at the time of sealing off hydraulic tank.

https://truckmanualshub.com/

■ Check the Travel Drives Oil Level

CAUTION

When the quantity of oil is found to have increased abnormally, it is necessary to check the oil seal of the travel motor.
If the seal is leaking, contact a IHIMER dealer.

1. Position one travel drive with oil drain plug (1) at the bottom.
2. Remove the oil level plug (2) and fill plug (3). Oil should be to the bottom of the level plug opening.
3. Add oil through the opening of oil level/fill plug if necessary.
4. Clean the plugs. Install the plugs.
5. Perform procedure on the other travel drive.

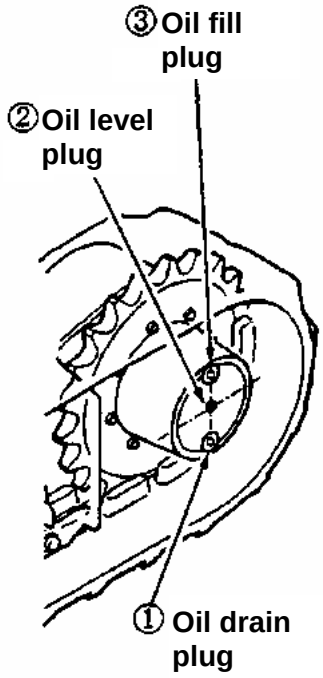

https://truckmanualshub.com/

3-8 1000 HOURS MAINTENANCE AND CHECKS

■ Change the Travel drive Oil

1. Position one travel drive with drain plug (1) at the bottom.
2. Remove drain plug (1) and oil level plug (2) and oil fill plug (3). Allow the oil to drain into a container.

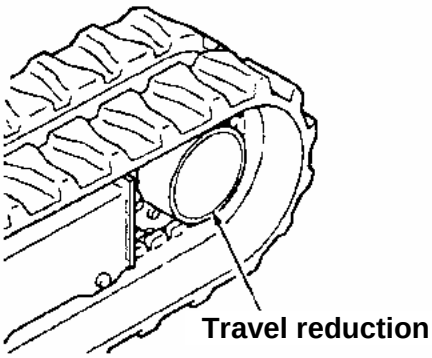

NOTE: *Dispose drained material according to local regulation.*

3. Clean the plugs.
4. Install drain plug (1).
5. Fill the travel drive to bottom of level plug opening.

Recomended oil	Refill capacities
Engine oil API CD, SAE30	0.33 Liter

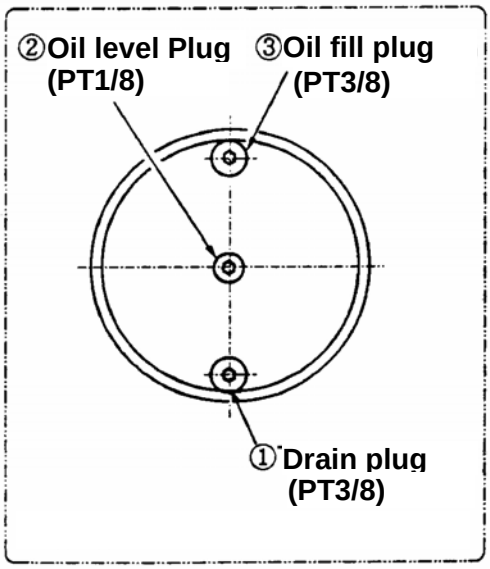

6. Install oil level plug (2) and oil fill plug (3).
7. Perform procedure on the other travel reduction.
8. Start the engine and allow the travel drive to turn through several cycles.
9. Stop the engine, check the oil level.
10. Check the drained oil for metal chips or particles. If there are any, consult your IHIMER dealer.

https://truckmanualshub.com/

■ Change Hydraulic Oil and Clean the Strainer

CAUTION

* Hot oil and components can cause personal injury. Do not allow hot oil or components to contact the skin.
* At operating temperature. the hydraulic tank is hot and can be under pressure.
* To relieve the pressure from the hydraulic tank, loosen the oil fill plug ① on the hydraulic tank.
* Relieve the tank pressure with engine off by removing fill plug slowly to prevent burns from hot oil.

1. Place the machine on level ground, with the arm and bucket cylinder fully retracted and attachments lowered, as shown. Stop the engine.

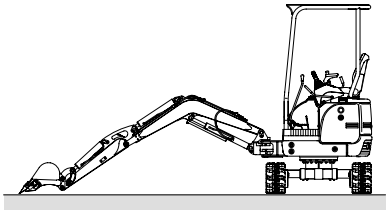

Bucket position at the time of drain the hydraulic oil.

2. Relieve the internal pressure from the hydraulic tank by loosening the fill plug ①.

3. Clean area thoroughly to keep dirt out of strainer cover unit ② and fill plug ①.

4. Remove the oil drain plug ③. Drain oil into a container. Drain oil in all parts of the hydraulic system thereafter.

NOTE: Always dispose of used oil as established by local regulation.

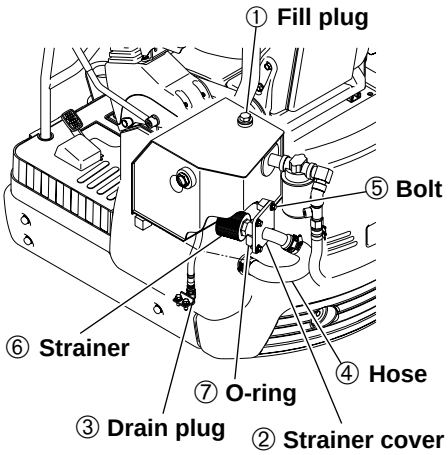

5. Remove the suction hoses ④. Remove the bolts ⑤ and the strainer cover unit ② /strainer ⑥ from the hydraulic tank.

6. Inspect the O ring ⑦ and replace it if damaged.

7. Clean the inside of the tank with the clean oil.

8. Clean and install the strainer cover unit ② / strainer ⑥ and the suction hoses ④.

9. Clean and install the drain plug ③.

https://truckmanualshub.com/

10. Fill the hydraulic tank with oil. See Recommended Lubricant Table.

11. Start and operate the engine at idling speed for 2~3 minuets.

12. Operate the control levers to allow the hydraulic oil to circulate through all hydraulic circuits.

13. Lower the bucket to the ground with the arm and bucket cylinder fully retracted and stop the engine.

14. Maintain the oil level between **FULL (H)** and **ADD (L)** marks on the level gauge ⑧.

15. Pressurize the hydraulic tank.
    Raise the boom with the arm, boom and bucket cylinder fully extended.
    Remove the fill plug ① and then install fill plug again.

16. Lower the bucket on the ground and stop the engine.

CAUTION

Hydraulic Oil Change Intervals for Breaker Works.
Hydraulic oil should be changed in every 600 service hours.

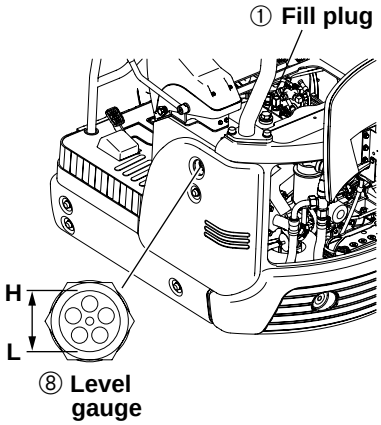

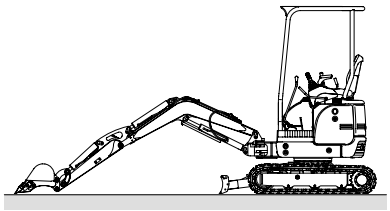

Bucket position at the time of checking the hydraulic oil level.

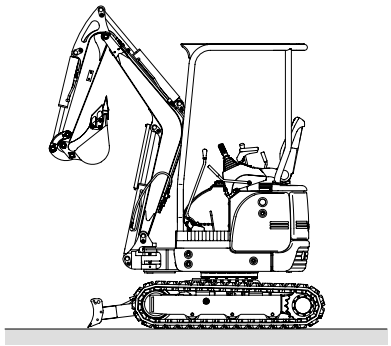

Bucket position at the time of sealing off hydraulic tank.

https://truckmanualshub.com/

1. Keep sand and dust out of the hydraulic system by keeping the reservoir filler cap tight and servicing the hydraulic system filters frequently.

2.

3.

4. When lubricating the machine, thoroughly clean each grease fitting before attaching the grease gun. Pump generous amounts of grease into all lubrication points, using the fresh grease to pump out old.

5. Adequate ground bearing support may be required for the tracks when operating in soft sand. Be alert for signs of track digging into sand during operations. It may be necessary to back off and fill in area where tracks dig in.
   The increased frequency of lubrication and service discussed above should be determined by observations made at the work site. Inspection will determine how long it takes for lubricants, breathers and filters to accumulate unacceptable amounts of sand or dust. The frequency of lubrication and service should be adjusted accordingly.

■ **High Humidity or Saltwater**

In some locations, such as coastal areas, the machine may be exposed to the deteriorating effects of salt, moisture, or both. To protect exposed metallic surfaces, wiring, paint and other items, keep them dry and well lubricated where salt or high humidity are encountered. Follow the recommendations below when operating in these conditions.

1. Make frequent inspections for rust and corrosions and remove them as soon as they are detected. Dry and paint exposed surfaces after rust and corrosion have been removed.

2. Where paint may not be applied, such as on polished or machined surfaces. coat the area with grease or lubricant to repel water.

3. Keep bearings and their surrounding surfaces well lubricated to prevent the entry of water.

5. Hose down the machine periodically when working in saltwater. If necessary, use an oil soaked cloth to clean moving parts.

6. If the machine is submerged, be sure it is never submerged in water deeper than upper crawler belt.
   If the machine exceeds this limit, disassemble, clean and lubricate the lower.

https://truckmanualshub.com/

3-11 LONG TERM STORAGE

■ Before Storage

To protect the cylinder rods, set the machine position in the right illustration.
(To prevent the cylinder rods from being rusted)

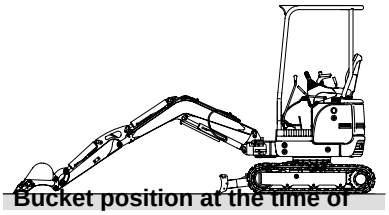

Bucket position at the time of long term storage.

To store the machine from long term, follow the next procedures.

- Clean parts of the machine and store indoors. If you have to place the machine outdoors, choose a flat place and cover the machine.
- Be sure to perform fill the fuel, lubrication, and oil change.
- Apply grease on the exposed part of the hydraulic cylinder piston rods.
-
- Lock the control levers and pedals with the lock lever and pedal lock.

■ During Storage

> ⚠
> If you have to operate the machine indoors to prevent rust, keep good ventilation and gas poisoning by window or entrance.

* Does not apply

During storage, operate the machine once a month to maintain films of oil at the lubrication section.
.

■ After Storage

After long term storage, follow the next procedures before operating the machine.

- Wipe away grease on the hydraulic cylinder rods.

https://truckmanualshub.com/

4 TROUBLE SHOOTING

4-1 TROUBLE AND REMEDY

Detect the occurrence of anything unusual in its early stages by well getting hold of the normal performance and condition of the machine while at daily operation.
When detecting anything unusual, investigate the cause, and make the repair.
When keeping the operation continue by neglecting anything unusual, it is in danger of relating with further big trouble.

SYMPTOM	PROBABLE CAUSE	REMEDY
Operating lever is felt hard or does not returm automatically.	• Failed of lubricating aver working part • Control valve damaged.	• Lubricate • Repair or replace.
All operation are fail or force and speed decrease.	• Low hydraulic oil. • Suction Strainer clogged. • Engine output drop. • Pump or coupling damaged. • Improper viscosity hydraulic oil. • Main relief valve pressure too tow. • Control valve damaged.	• Replenish hydraulic oil. • Clean filter element. • Clean air cleaner and inspect fuel system. • Repair or replace. • Replace hydraulic on with ecommended viscosity. • Check and adjust pressure. • Repair or replace.
Travel of left, right, or both sides are inoperable.	• Clogging foreign matter such as stone. • Defective travel motor or reduction. • Defective brake valve	• Remove foreign matter. • Repair or replace. • Repair or replace.
Straight travel defective	• Clogging foreign matter. • Shoe tension unequal. • Defective pump. • Loosen travel lever stopper. • Defective motor or brake valve.	• Remove foreign matter. • Adjust to properly tension on both sides. • Repair or replace. • Adjust and tighten nut. • Repair or replace.
Swing is inoperable or smooth swing isinoperable.	• Fail lubricate of swing bearing. • Defective motor. • Defective brake valve. • Defective cushion valve.	• Lubricate swing bearing. • Repair or replace. • Repair or replace. • Repair or replace.
Digging force defective	• Low hydraulic oil. • Improper viscosity hydraulic oil. • Main relief valve pressure too low. • Control valve damaged. • Internal leakage of hydraulic cylinder	• Replenish hydraulic oil. • Replace hydraulic oil with ecommended viscosity. • Check and adjust pressure. • Repair or replace. • Repair or replace.

https://truckmanualshub.com/

5 HYDRAULIC SYSTEM DIAGRAM

5-1 HYDRAULIC SYSTEM DIAGRAM

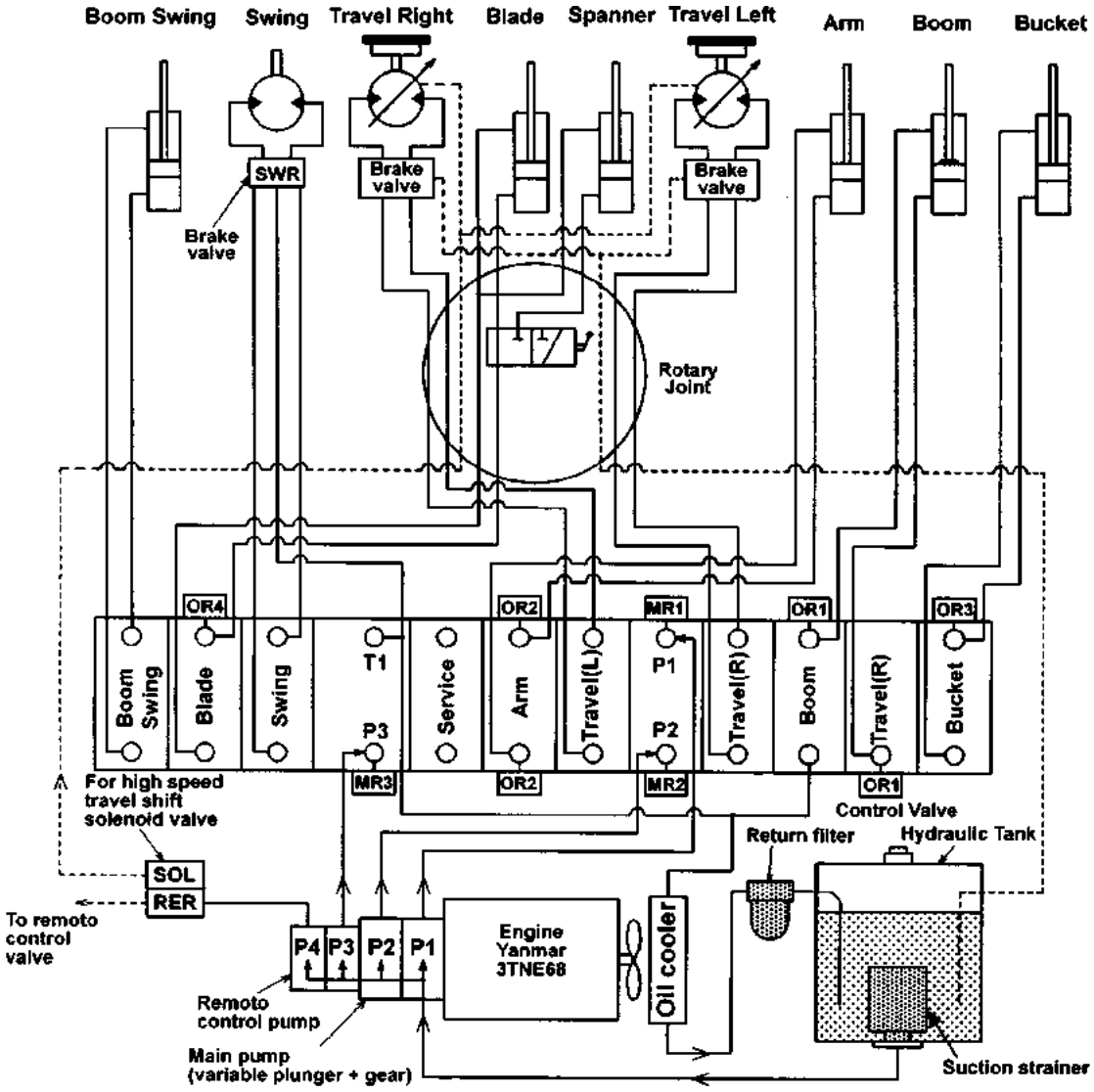

Relief valve set pressure

Code	Item	Pressure	
		MPa	kgf/cm²
MR1	Main relief valve P1 Pump	20.6	210
MR2	Main relief valve P2 Pump	20.6	210
MR3	Main relief valve P3 Pump	18.1	185
OR1	Overload relief valve (Boom)	24.5	250
OR2	Overload relief valve (Arm)	24.5	250
OR3	Overload relief valve (Bucket)	24.5	250
OR4	Overload relief valve (Blade)	20.6	210
SWR	Swing relief valve	15.2	155
RER	Remote control relief valve	2,9	30

Tank level capacity
19 liters
Total system volume
23 liters

Pump flow rate (Max.):
P1 ; 17.2 liter/min
P2 ; 17.2 liter/min
P3 ; 12.0 liter/min

The service ports used the flow shared by the P2 and P3 pump.

https://truckmanualshub.com/

7 SPECIFICATIONS

7-1 GENERAL SPECIFICATIONS

■ BASE MACHINE PERFORMENCE

	Unit	17VXE
Swing speed	min^{-1} (rpm)	9.4 (9.4)
Travel speed	km / h	2.1 / 4.2
Gradability	% (deg.)	58 (30)
Operating temperat. range	℃	-20 / +46

■ MOTOR

Motor model	–	Rueland 480V
Motor type		electric 1/3 phase *can be customized
s		
Rated output	kW / min^{-1} (ps/ rpm)	15 HP

■ WEIGHT

			STD	with ADD Weight
Machine mass	Rubber shoe	kg	1620	1720
	Steel shoe		1680	1780
Average ground bearing pressure	Rubber shoe	kPa (kgf / cm^2)	25.5 (0.26)	26.5 (0.27)
	Steel shoe		27.5 (0.28)	28.4 (0.29)

■ REFILL CAPACITIES – (APPROXIMATE)

Fuel		L	20
Hydraulic fluid	Oil level	L	19
	Total amount	L	23

■ NOISE LEVEL

External noise emission	LwA	93 dB
Noise emission at the operator ear	LpA	81 dB

https://truckmanualshub.com/

LEVEL OF EXPOSURE TO VIBRATIONS
(Directive 2002/44/CE)

	Unit	Whole-body	Hand - Arm
Daily exposure action value	m/sec²	0,5	2,5
Daily exposure limit value	m/sec²	1,15	5

Equivalent acceleration - For whole-body vibrations
(Method of measurement according to ISO2631)

GROUND	ACTION	Unit	Eq.ac. max.
Flat and compacted/ Asphalt	Driving 1st speed	m/sec²	0,42
	Driving 2nd speed	m/sec²	0,49
Earth	Digging / lowered blade	m/sec²	0,39
	Filling	m/sec²	0,49

Equivalent acceleration – For hand - arm vibrations
(Method of measurement according to ISO5349)

GROUND	ACTION	Unit	Eq.ac.
Flat and compacted / Asphalt	Driving 1st speed	m/sec²	1,53
	Driving 2nd speed	m/sec²	2,39
Earth	Digging / lowered blade	m/sec²	2,03
	Filling	m/sec²	1,77

BUCKET

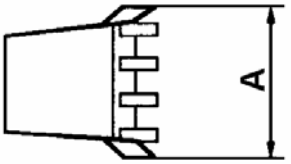

⊕ = Standard
☑ = Applicable
☒ = Not Applicable

Bucket capacity ISO (JIS) (m^3)	Widht (mm) *side cutter* (A)	Number of teeth	Weight (kg)	Combinations	
				Standard arm	Long arm
0,040	400	4	36	⊕ General digging	⊕ General digging
0,020	250	2	25	☑ Ditch digging	☑ Ditch digging
0,025	300	3	29	☑ Ditch digging	☑ Ditch digging
0,030	350	3	31	☑ Ditch digging	☑ General digging
0,050	500	4	40	☑ Loading	☑ Loading

Buckets of bigger dimensions than standard, where is allowed, must be used carefully to avoid damages to the structures and maintain the stability of machine.

https://truckmanualshub.com/

7-2 OVERALL DIMENSIONS

1. OVERALL DIMENSIONS

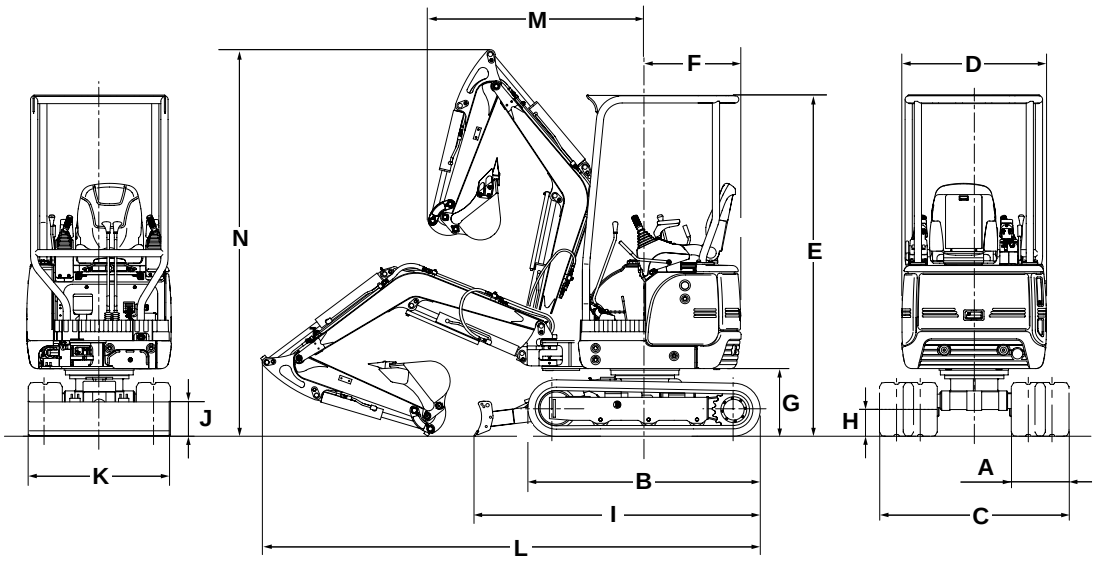

Unit: mm

			STD		ADD Weight	
Codes	Description		Rubber shoe	Steel shoe	Rubber shoe	Steel shoe
A	Crawler shoe width		230	230	230	230
B	Overall length of crawler		1570	1550	1570	1550
C	Overall width of crawler		980~1300	980~1300	980~1300	980~1300
D	Canopy		980	980	980	980
E	Canopy		2330	2330	2330	2330
F	Rear end swing radius		680	680	720	720
G	Rear end ground clearance		460	460	460	460
H	Mini. ground clearance		175	175	175	175
I	Overall length of undercarriage		1950	1950	1950	1950
J	Blade height		235	235	235	235
K	Blade width		980~1300	980~1300	980~1300	980~1300
L	Overall length	Blade in front	3380	3380	3380	3380
		Blade in rear	3740	3740	3740	3740
M	Front end mini. radius at center		1490	1490	1490	1490
N	Arm head clearance		2630	2630	2630	2630

https://truckmanualshub.com/

7-3 WORKING RANGE

■ OFFSET DIGGING WORKING RANGE
[Machine with Canopy]

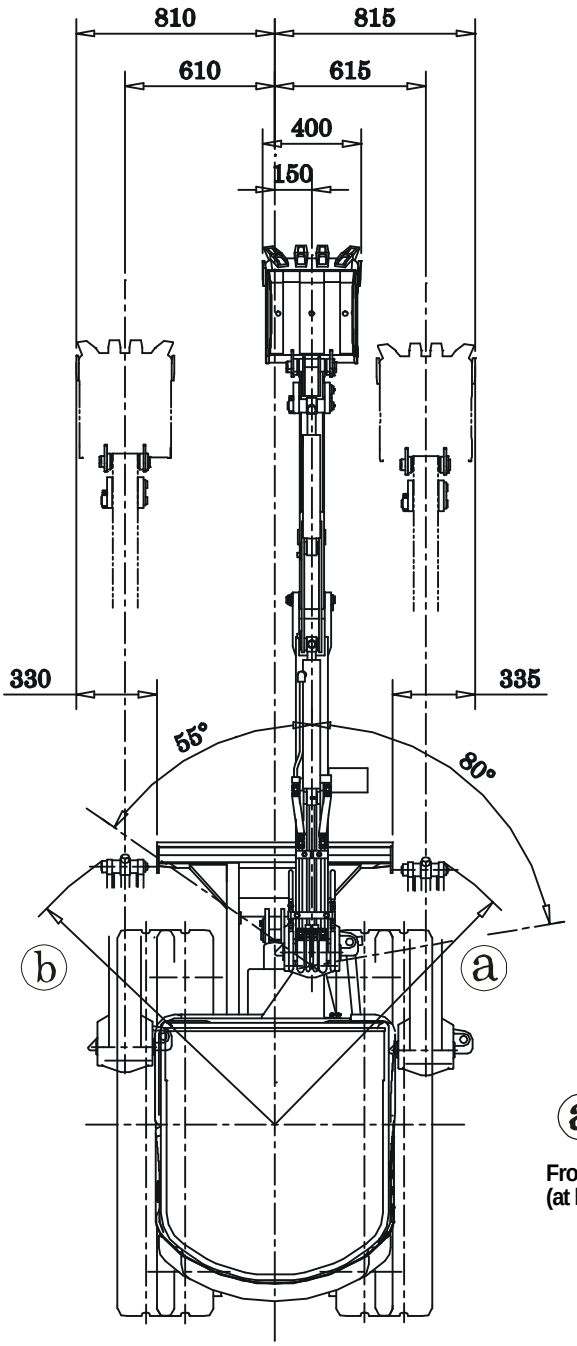

ⓑ R1280

Front-end min radius
(at right boom swing)

ⓐ R1270

Front-end min radius
(at left boom swing)

https://truckmanualshub.com/

7-4 WORKING RANGE (BACK HOE)

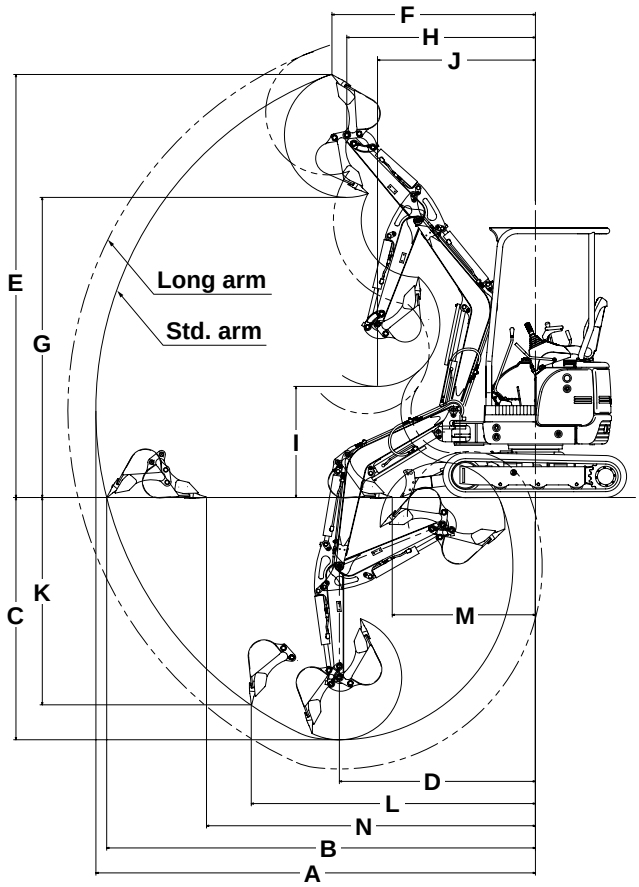

Unit: mm

Key	Description	Std. arm	Long arm
	Std. of bucket capacity (m3), ISO Heaped	0,04 m³	0,04 m³
A	Max. digging radius	3760	3990
B	Max. bucket outreach at ground level	3660	3910
C	Max. digging depth(Not used blade)	2100	2350
D	Radius of max. digging depth	1680	1680
E	Max. digging height	3610	3810
F	Radius of max. digging height	1740	1900
G	Max. dumping height	2560	2760
H	Radius of max. digging height	1610	1770
I	Min. dumping height	950	720
J	Radius of min. dumping height	1350	1440
K	Max. vertical digging depth	1770	2010
L	Radius of max. vertical digging depth	2430	2490
M	Radius of min. digging ground level	1220	1120
N	Max. clean-up radius at floor level	2810	3040

https://truckmanualshub.com/

7-5 RATED OBJECT HANDLING CAPACITIES TABLE

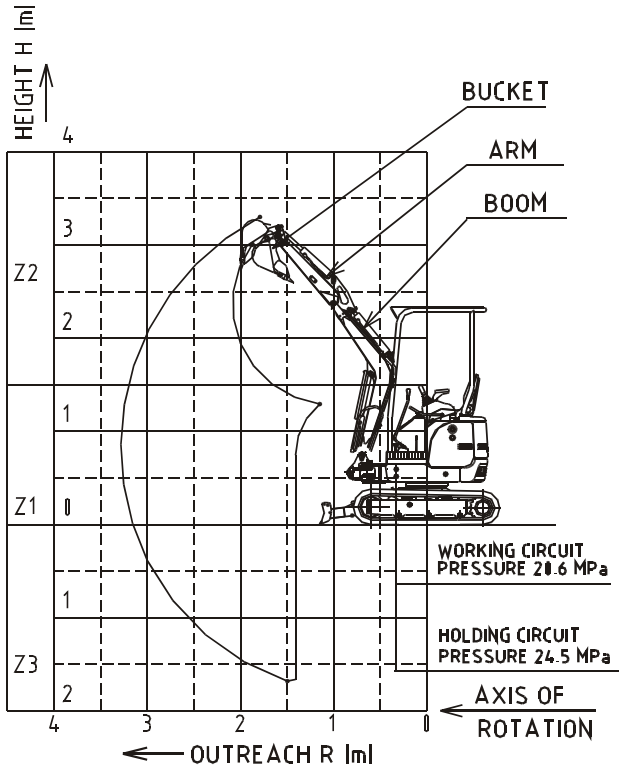

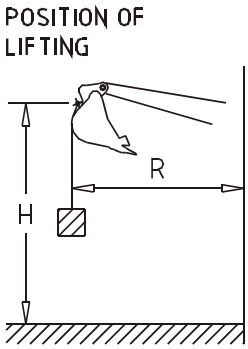

WORKING CONDITION:
- with bucket
- on a compact horizontal level ground
- in a complete swing of the upperstructure

These loads are value for the height of the considered zone [Z] for the intended outreach

LIFTING CAPACITY

The lifting capacity is applied for operation on a level and firm ground. If the machine is operated on an unleveled or unstable ground, the capacity decreases.

RETRACTED CRAWLER -- OUTREACH in m - LOADS in kg					
OUTREACH [m]		3.5	3	2.5	2
BOOM LENGHT 1.65 m ARM LENGHT 0.95 - 1.20 m	Z2		100	100	200
	Z1	100	100	100	200
	Z3		100	100	100

EXPANDED CRAWLER -- OUTREACH in m - LOADS in kg					
OUTREACH [m]		3.5	3	2.5	2
BOOM LENGHT 1.65 m ARM LENGHT 0.95 - 1.20 m	Z2		200	200	300
	Z1	100	200	200	300
	Z3		200	200	300

WARNING

HERE MAY BE SOME LOCAL GOVERNMENT REGULATIONS REGARDING THE USE OF EXCAVATORS TO LIFT HEAVY OBJECTS. PLEASE OBSERVE THOSE REGULATIONS WHERE THEY APPLY.

https://truckmanualshub.com/

NOTES:

https://truckmanualshub.com/

MINI EXCAVATOR

17VXE

PUBLISHED JANUARY 2010

IHIMER S.p.A

ITALY

https://truckmanualshub.com/

https://truckmanualshub.com/

IHIMER Spa
53037 San Gimignano - Loc. Cusona (SI) - Italy

info@ihimer.com | www.ihimer.com