T300

Body Builders' Manual

KENWORTH

KENWORTH
A DIVISION OF PACCAR

BODY BUILDERS' MANUAL

CONTENTS

SECTION 1 INTRODUCTION

SCOPE 1-1

SECTION 2 SAFETY AND COMPLIANCE

SAFETY SIGNALS 2-1
Warnings, cautions, and notes 2-1
FEDERAL MOTOR VEHICLE SAFETY STANDARDS (FMVSS) COMPLIANCE 2-1
Incomplete Vehicle Certification 2-2

SECTION 3 DIMENSIONS

ABBREVIATIONS 3-1
TURNING RADIUS 3-1
OVERALL DIMENSIONS. 3-1
Side View — T300 with Single Rear Axle 3-2
Side View — T300 with Tandem Rear Axle 3-3
Front and Rear Views — T300 3-4
DETAIL VIEWS 3-5
Side View Detail — T300 3-5
Left Side: Step and Cab Floor Height — T300 3-6
Right Side: Step and Cab Floor Height — T300 3-7
Crossmember Locations — T300 3-8
Fuel Tank Locations — T300 3-9
COMPONENTS 3-10
Frame Rail Configurations — T300 3-10
Battery Box and Air Tanks — T300 3-10
Fuel Tank and Exhaust — T300 3-11
22-inch Fuel Tanks — T300 3-11
Horizontal Muffler-Vertical Tailpipe on Cab — T300 3-12

SECTION 4 BODY MOUNTING

CRITICAL CLEARANCES 4-1
Rear Wheels and Cab 4-1
Chassis with Outserts 4-2
BODY MOUNTING USING BRACKETS 4-2
Frame Sill 4-2
Brackets 4-3
Mounting Holes 4-3
Frame Drilling 4-4

BODY MOUNTING USING U–BOLTS 4-4
Spacers 4-4
Rear Body Mount 4-5

SECTION 5 FRAME MODIFICATIONS

INTRODUCTION 5-1
DRILLING RAILS 5-1
Location and Hole Pattern 5-1
MODIFYING FRAME LENGTH 5-1
Frame Insert 5-1
Changing Wheelbase 5-2
Crossmembers 5-4
WELDING 5-4
Precautions 5-4

SECTION 6 ELECTRICAL

INTRODUCTION 6-1
ELECTRICAL CIRCUITS 6-1
Capacity 6-1
Prewired Body Harness 6-1
Fuse and Circuit Identification 6-2
Circuits Wired Through the Ignition 6-4
Circuits Wired to Battery 6-4
INSTALLING A THIRD BATTERY 6-5
WIRING FOR A LIFTGATE 6-5
Liftgate Power Source 6-5
Connecting the Liftgate Power 6-6

APPENDIX A VEHICLE IDENTIFICATION

VEHICLE IDENTIFICATION NUMBER A-1
VIN Location A-1
Chassis Number Locations A-1
CERTIFICATION LABELS A-1
Components and Weights Label A-1
Tire/Rim and Weight Rating Data Label A-2
Incomplete Vehicle Certification Label A-2
Noise Emission Label A-2
Paint Identification Label A-2
COMPONENT IDENTIFICATION A-2
Engine Identification A-2
Transmission Identification A-2
Front Axle Identification A-2
Rear Axle Identification A-3

APPENDIX B WEIGHT DISTRIBUTION

INTRODUCTION B-1
Abbreviations B-1
CALCULATIONS B-2
Weight Distribution without Body B-2
Weight Distribution with Body B-3
COMPLETE (LOADED) VEHICLE. B-7
Water Level Load B-7
Body Length B-8

INDEX

FIGURES

Figure 2–1. Incomplete Vehicle Certification Document. 2-2
Figure 2–2. Location of Certification Labels - Driver's Door 2-2
Figure 3–1. T300 W/ Single Rear Axle: Height and Length Measurements. 3-2
Figure 3–2. T300 W/ Tandem Rear Axle: Height and Length Measurements. 3-3
Figure 3–3. T300 Front View: Width and Ground Clearance Measurements [inches (mm)]. 3-4
Figure 3–4. T300 Rear View: Width and Ground Clearance Measurements [inches (mm)]. 3-4
Figure 3–5. T300 Detailed Side View: Specific Measurements [inches (mm)]. 3-5
Figure 3–6. T300 Battery Box Step and Cab Floor: side view, left side. 3-6
Figure 3–7. T300 Fuel Tank Step and Cab Floor: side view, right side. 3-7
Figure 3–8. T300 Crossmember Location and Overall Width with Doors Open. 3-8
Figure 3–9. T300 Fuel Tank Locations. 3-9
Figure 3–10. T300 10.5 and 10.62–Inch Rail Measurements [Inches (mm)] and Strength Characteristics. 3-10
Figure 3–11. T300 Battery Box and Air Tank Measurements [Inches (mm)]. 3-10
Figure 3–12. T300 Standard Fuel Tank and Exhaust Measurements [Inches (mm)]. 3-11
Figure 3–13. T300 Optional 22-inch Fuel Tank Mounting Measurements [Inches (mm)]. 3-11
Figure 3–14. T300 Vertical Tailpipe on Side of Cab [Inches (mm)]. 3-12
Figure 3–15. T300 Vertical Tailpipe on Back of Cab [Inches (mm)]. 3-12
Figure 4–1. Minimum Clearance Between Top of Rear Tires and Body Structure Overhang. 4-1
Figure 4–2. Minimum Back–of–Cab Clearance. 4-1
Figure 4–3. Air Gap with Frame Rail with Outsert 4-2
Figure 4–4. Spacer Between Frame Sill and Body Rail — Rubber or Plastic. 4-3
Figure 4–5. High Compression Spring Between the Mounting Bolt and Upper Bracket. 4-3
Figure 4–6. Rubber Spacer Between Brackets. 4-3
Figure 4–7. Hole Location Guidelines for Frame Rail and Bracket. 4-3
Figure 4–8. Crossmember–Gusset Hole Pattern Requirements. 4-4
Figure 4–9. Acceptable U–Bolt Mounting with Wood and Fabricated Spacers. 4-5
Figure 4–10. Clearance Space for Air Lines and Cables. 4-5
Figure 4–11. Example of Fishplate Bracket at Rear End of Body, used with U–Bolts. 4-5
Figure 5–1. Detail of Frame Extensions and Joint Welding. 5-2
Figure 5–2. Frame Insert 5-2
Figure 5–3. Comparison of Original, Shortened, and Extended Wheelbases. 5-3
Figure 5–4. Crossmember Added When Distance Exceeds 60 Inches (1524mm). 5-4
Figure 6–1. Location of Prewired Body Harness Connection. 6-1
Figure 6–2. Prewired Truck and Body Harness (before 4/98) 6-2
Figure 6–3. Prewired Truck and Body Harness (after 3/98) 6-3
Figure 6–4. Adding a Third Battery 6-5
Figure 6–5. Liftgate Circuit Breaker Inside Battery Box. 6-6
Figure A–1. Vehicle Identification Number (VIN). A-1
Figure A–2. Driver's Door and Door Frame Labels A-1
Figure A–3. Cummins Identification Plate. A-2
Figure A–4. Front Axle Identification. A-2
Figure A–5. Rear Axle Identification Labels. A-3
Figure B–1. Balanced Load: CGf 100 in. from front axle. B-2
Figure B–2. Unbalanced Load: CGf 133 in. from front axle. B-2
Figure B–3. Balanced Body Unloaded: CGf 156 in. (3962 mm) from front axle. B-5
Figure B–4. Liftgate Example: CGf 246 in. (6248 mm) from front axle. B-6
Figure B–5. Loaded Vehicle Example: CGf 156 in. (3962 mm) from front axle. B-7

TABLES

TABLE 3-1. Abbreviations Used. 3-1
TABLE 3-2. Turning Radius-T300 w/single rear axle 3-1
TABLE 3-3. Turning Radius-T300 w/tandem rear axles 3-1
TABLE 3-4. T300 w/ Single Rear Axle: Overall Dimensions [inches (mm)]. 3-2
TABLE 3-5. T300 w/ Tandem Rear Axle: Overall Dimensions [inches (mm)]. 3-3
TABLE 3-6. T300 Front and Rear Suspension (FS/RS) Centerline (C/L) to Rail Measurements. 3-5
TABLE 3-7. T300 Battery Box Step and Cab Floor Measurements. 3-6
TABLE 3-8. T300 Fuel Tank Step and Cab Floor Measurements. 3-7
TABLE 3-9. T300 Crossmember Locations: measured from front axle centerline [inches (mm)]. 3-8
TABLE 3-10. T300 Fuel Tank Locations for Standard Wheelbase Configurations [inches (mm)]. 3-9
TABLE 6-1. Third Battery Installation Parts 6-5
TABLE A-1. Model Year Letter (CODE) Designations. A-1
TABLE B-1. T300 Single Rear Axle “Bare” Chassis Tare Weights (no driver, no fuel), lb (kg). B-3
TABLE B-2. T300 Tandem Rear Axle “Bare” Chassis Tare Weights (no driver, no fuel), lb (kg). B-4
TABLE B-3. T300 Options B-4
TABLE B-4. T300 Weight distribution and chassis rating calculation (sample) B-7
TABLE B-5. Recommended T300 Body Lengths (Single Rear Axle). B-8
TABLE B-6. Recommended T300 Body Lengths (Tandem Rear Axle). B-8

SECTION 1 **INTRODUCTION**

SCOPE

This manual was created to provide body builders with appropriate information and guidelines useful in the body planning and installation process. This information will be helpful when installing bodies or other associated equipment.

This manual contains appropriate dimensional information, guidelines for mounting bodies, guidelines for modifying frames, electrical wiring information, and other information useful in the body installation process.

The intended primary users of this manual are body builders who install bodies and associated equipment on Kenworth T300 Medium Duty vehicles. Dealers who sell and service the vehicle will also find this information useful.

This Body Builders' Manual can be very useful when specifying a vehicle, particularly when the body builder is involved in the vehicle definition and ordering process. Early in the process, professional body builders can often contribute valuable information that reduces the ultimate cost of the body installation.

This manual is not a maintenance manual or an operation manual.

- For chassis maintenance and repair information consult the *Kenworth Medium Duty Maintenance Manual* available in the Service Department of the selling dealer or you can order your own copy of the maintenance manual from your local dealer.
- For chassis operating information consult the *Operator's Manual*, included with each vehicle. They can also be ordered from your local dealer.

SECTION 2 SAFETY AND COMPLIANCE

SAFETY SIGNALS

We've put a number of alerting messages in this book. Please read and follow them. They are there for your protection and information. These alerting messages can help you avoid injury to yourself or others and help prevent costly damage to the vehicle.

Key symbols and "signal words" are used to indicate what kind of message is going to follow. Pay special attention to comments prefaced by "WARNING", "CAUTION", and "NOTE." Please don't ignore any of these alerts.

Warnings, cautions, and notes

WARNING

When you see this word and symbol, the message that follows is especially vital. It signals a **potentially hazardous situation** which, if not avoided, could result in death or serious injury. This message will tell you what the hazard is, what can happen if you don't heed the warning, and how to avoid it.

Example:

WARNING! Be sure to use a circuit breaker designed to meet liftgate amperage requirements. An incorrectly specified circuit breaker could result in a electrical overload or fire situation. Follow the liftgate installation instructions and use a circuit breaker with the recommeded capacity.

CAUTION

Signals a **potentially hazardous situation** which, if not avoided, could result in minor or moderate injury or damage to the vehicle.

Example:

CAUTION: Never use a torch to make a hole in the rail. Use the appropriate drill bit.

NOTE

Provides general information: for example, the note could warn you on how to avoid damaging your vehicle or how to drive the vehicle more efficiently.

Example:

NOTE: Be sure to provide maintenance access to the battery box and fuel tank fill neck.

Please take the time to read these messages when you see them, and remember:

WARNING

Indicates a potentially hazardous situation which, if not avoided, could result in death or serious injury.

CAUTION

Signals a potentially hazardous situation which, if not avoided, could result in minor or moderate injury or damage to the vehicle.

NOTE

Useful information that is related to the topic being discussed.

FEDERAL MOTOR VEHICLE SAFETY STANDARDS (FMVSS) COMPLIANCE

As an Original Equipment Manufacturer (OEM), Kenworth Truck Co. ensures that our products comply with all applicable Federal Motor Vehicle Safety Standards (FMVSS). However, the fact that this vehicle has no fifth–wheel and that a Body Builder (Final Stage Manufacturer) will be doing additional modifications means that the vehicle was incomplete when it left the build plant. See page 2–2 and Appendix A for additional information.

Incomplete Vehicle Certification

An Incomplete Vehicle Document is shipped with the vehicle, certifying that the vehicle is not complete. See Figure 2–1. In addition, affixed to the driver's side door frame or edge is an Incomplete Vehicle Certification label. See Figure 2–2.. For further information on Vehicle Certification and Identification, see APPENDIX A "VEHICLE IDENTIFICATION."

NOTE: These documents list the FMVSS regulations that the vehicle complied with when it left the build plant. You should be aware that if you modify or alter any of the components or systems covered by these FMVSS regulations, it is your responsibility as the Final Stage Manufacturer to ensure that the complete vehicle maintains compliance with the particular FMVSS regulations when you complete your modifications.

As the Final Stage Manufacturer, you should retain the Incomplete Vehicle Document for your records. In addition, you should record and retain the manufacturer and serial number of the tires on the vehicle. Upon completion of the vehicle (installation of the body and any other modifications), you should affix your certification label to the vehicle as required by Federal law. This tag identifies you as the "Final Stage Manufacturer" and certifies that the vehicle complies with Federal Motor Vehicle Safety Standards. (See Figure 2–2.)

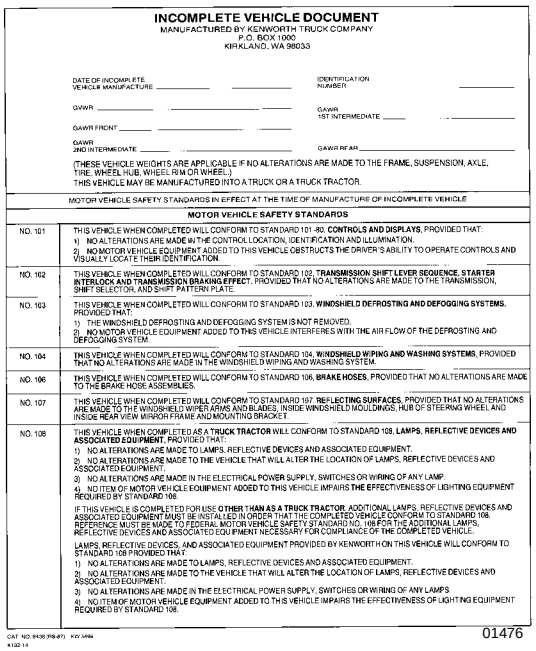

INCOMPLETE VEHICLE DOCUMENT
MANUFACTURED BY KENWORTH TRUCK COMPANY
P.O. BOX 1000
KIRKLAND, WA 98033

DATE OF INCOMPLETE VEHICLE MANUFACTURE _____ IDENTIFICATION NUMBER _____
GVWR _____ GAWR 1ST INTERMEDIATE _____
GAWR FRONT _____
GAWR 2ND INTERMEDIATE _____ GAWR REAR _____

(THESE VEHICLE WEIGHTS ARE APPLICABLE IF NO ALTERATIONS ARE MADE TO THE FRAME, SUSPENSION, AXLE, TIRE, WHEEL HUB, WHEEL RIM OR WHEEL.)
THIS VEHICLE MAY BE MANUFACTURED INTO A TRUCK OR A TRUCK TRACTOR.

MOTOR VEHICLE SAFETY STANDARDS IN EFFECT AT THE TIME OF MANUFACTURE OF INCOMPLETE VEHICLE

MOTOR VEHICLE SAFETY STANDARDS

NO. 101	THIS VEHICLE WHEN COMPLETED WILL CONFORM TO STANDARD 101-80, **CONTROLS AND DISPLAYS**, PROVIDED THAT: 1) NO ALTERATIONS ARE MADE IN THE CONTROL LOCATION, IDENTIFICATION AND ILLUMINATION. 2) NO MOTOR VEHICLE EQUIPMENT ADDED TO THIS VEHICLE OBSTRUCTS THE DRIVER'S ABILITY TO OPERATE CONTROLS AND VISUALLY LOCATE THEIR IDENTIFICATION.
NO. 102	THIS VEHICLE WHEN COMPLETED WILL CONFORM TO STANDARD 102, **TRANSMISSION SHIFT LEVER SEQUENCE, STARTER INTERLOCK AND TRANSMISSION BRAKING EFFECT**, PROVIDED THAT NO ALTERATIONS ARE MADE TO THE TRANSMISSION, SHIFT SELECTOR, AND SHIFT PATTERN PLATE.
NO. 103	THIS VEHICLE WHEN COMPLETED WILL CONFORM TO STANDARD 103, **WINDSHIELD DEFROSTING AND DEFOGGING SYSTEMS**, PROVIDED THAT: 1) THE WINDSHIELD DEFROSTING AND DEFOGGING SYSTEM IS NOT REMOVED. 2) NO MOTOR VEHICLE EQUIPMENT ADDED TO THIS VEHICLE INTERFERES WITH THE AIR FLOW OF THE DEFROSTING AND DEFOGGING SYSTEM.
NO. 104	THIS VEHICLE WHEN COMPLETED WILL CONFORM TO STANDARD 104, **WINDSHIELD WIPING AND WASHING SYSTEMS**, PROVIDED THAT NO ALTERATIONS ARE MADE IN THE WINDSHIELD WIPING AND WASHING SYSTEM.
NO. 106	THIS VEHICLE WHEN COMPLETED WILL CONFORM TO STANDARD 106, **BRAKE HOSES**, PROVIDED THAT NO ALTERATIONS ARE MADE TO THE BRAKE HOSE ASSEMBLIES.
NO. 107	THIS VEHICLE WHEN COMPLETED WILL CONFORM TO STANDARD 107, **REFLECTING SURFACES**, PROVIDED THAT NO ALTERATIONS ARE MADE TO THE WINDSHIELD WIPER ARMS AND BLADES, INSIDE WINDSHIELD MOULDINGS, HUB OF STEERING WHEEL AND INSIDE REAR VIEW MIRROR FRAME AND MOUNTING BRACKET.
NO. 108	THIS VEHICLE WHEN COMPLETED AS A **TRUCK TRACTOR** WILL CONFORM TO STANDARD 108, **LAMPS, REFLECTIVE DEVICES AND ASSOCIATED EQUIPMENT**, PROVIDED THAT: 1) NO ALTERATIONS ARE MADE TO LAMPS, REFLECTIVE DEVICES AND ASSOCIATED EQUIPMENT. 2) NO ALTERATIONS ARE MADE TO THE VEHICLE THAT WILL ALTER THE LOCATION OF LAMPS, REFLECTIVE DEVICES AND ASSOCIATED EQUIPMENT. 3) NO ALTERATIONS ARE MADE IN THE ELECTRICAL POWER SUPPLY, SWITCHES OR WIRING OF ANY LAMP. 4) NO ITEM OF MOTOR VEHICLE EQUIPMENT ADDED TO THIS VEHICLE IMPAIRS THE EFFECTIVENESS OF LIGHTING EQUIPMENT REQUIRED BY STANDARD 108. IF THIS VEHICLE IS COMPLETED FOR USE **OTHER THAN AS A TRUCK TRACTOR**, ADDITIONAL LAMPS, REFLECTIVE DEVICES AND ASSOCIATED EQUIPMENT MUST BE INSTALLED IN ORDER THAT THE COMPLETED VEHICLE CONFORM TO STANDARD 108. REFERENCE MUST BE MADE TO FEDERAL MOTOR VEHICLE SAFETY STANDARD NO. 108 FOR THE ADDITIONAL LAMPS, REFLECTIVE DEVICES AND ASSOCIATED EQUIPMENT NECESSARY FOR COMPLIANCE OF THE COMPLETED VEHICLE. LAMPS, REFLECTIVE DEVICES, AND ASSOCIATED EQUIPMENT PROVIDED BY KENWORTH ON THIS VEHICLE WILL CONFORM TO STANDARD 108 PROVIDED THAT: 1) NO ALTERATIONS ARE MADE TO LAMPS, REFLECTIVE DEVICES AND ASSOCIATED EQUIPMENT. 2) NO ALTERATIONS ARE MADE TO THE VEHICLE THAT WILL ALTER THE LOCATION OF LAMPS, REFLECTIVE DEVICES AND ASSOCIATED EQUIPMENT. 3) NO ALTERATIONS ARE MADE IN THE ELECTRICAL POWER SUPPLY, SWITCHES OR WIRING OF ANY LAMPS. 4) NO ITEM OF MOTOR VEHICLE EQUIPMENT ADDED TO THIS VEHICLE IMPAIRS THE EFFECTIVENESS OF LIGHTING EQUIPMENT REQUIRED BY STANDARD 108.

CAT. NO. 8436 (RB-87) KW 3494
8132-14
01476

Figure 2–1. Incomplete Vehicle Certification Document.

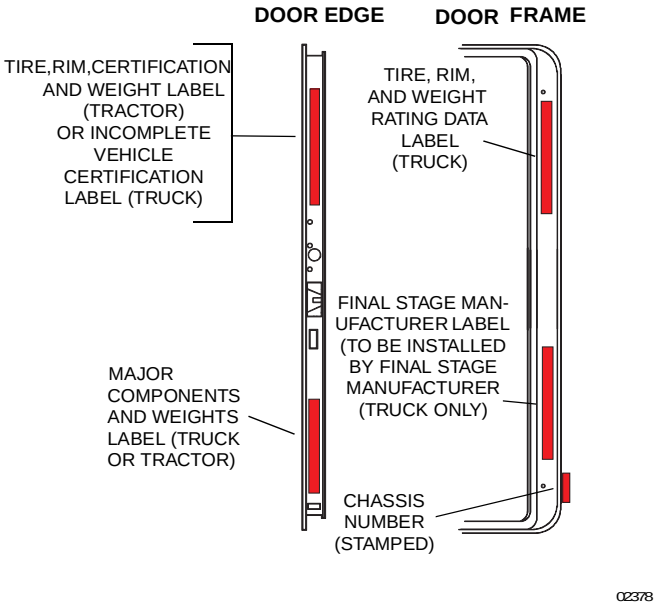

Figure 2–2. Location of Certification Labels - Driver's Door

SECTION 3 DIMENSIONS

ABBREVIATIONS

Throughout this section and in other sections as well, abbreviations are used to describe certain characteristics on your vehicle. The chart below lists the abbreviated terms used.

TABLE 3-1. Abbreviations Used.

A	OVERALL VEHICLE LENGTH
AF	FRAME RAIL OVERHANG LENGTH BEHIND REAR AXLE
B	FRONT BUMPER TO FRONT AXLE LENGTH
CA	BACK OF CAB TO REAR AXLE LENGTH
D	CAB HEIGHT
WB	WHEELBASE LENGTH

TURNING RADIUS

Approximate turning radius specifications for the T300 are listed (by wheelbase) in the following tables. Tables **3-2** and **3-3** list turn radius information for chassis with standard components. Optional components may give different results.

TABLE 3-2. Turning Radius-T300 w/single rear axle

T300 W/SINGLE REAR AXLE		
WHEELBASE (IN.)	**CURB TO CURB (FT.)**	**WALL TO WALL (FT.)**
145	20	23
150	21	24
160	22	25
185	25	28
200	27	30
215	29	32
230	31	34
245	32	35
260	34	37
280	36	39

TABLE 3-3. Turning Radius-T300 w/tandem rear axles

T300 W/TANDEM REAR AXLES		
WHEELBASE (IN.)	**CURB TO CURB (FT.)**	**WALL TO WALL (FT.)**
165	24	28
175	26	29
190	27	30
205	29	32
220	31	34
235	33	36
250	35	38
260	36	39

OVERALL DIMENSIONS

This section includes drawings and charts of the standard T300 vehicle, including a 10,000 lb. front suspension, a 20,000 lb. rear suspension, and R250F 295/75R22.5 tires. Use these drawings to plan overall vehicle configurations.

On the pages that follow, detail drawings show particular views of each vehicle component. They illustrate important measurements critical to designing bodies of all types. See the “Contents” at the beginning of the manual to locate the drawing you need.

Side View — T300 with Single Rear Axle

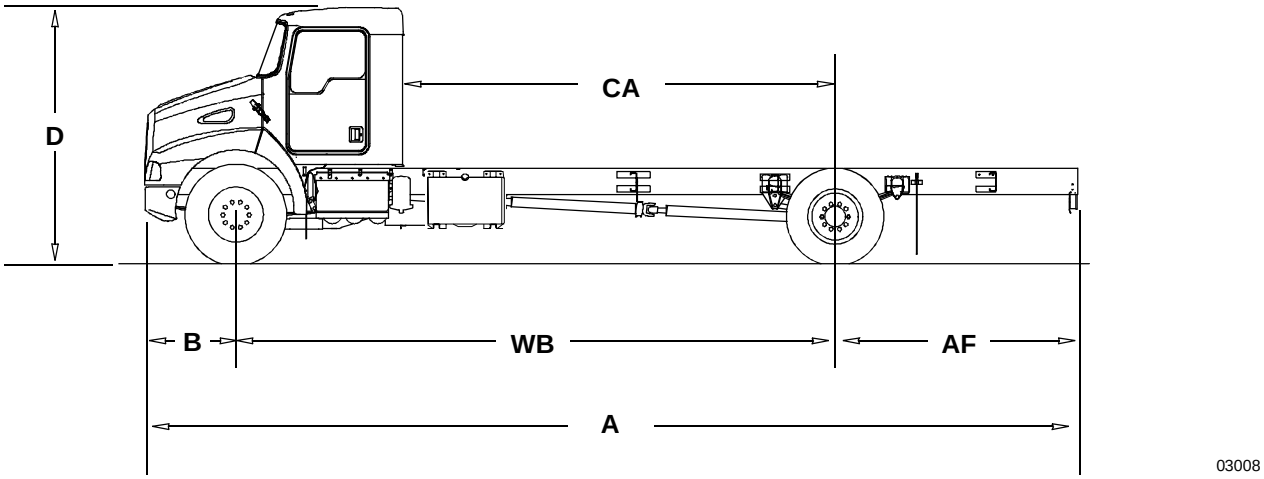

Figure 3–1. T300 W/ Single Rear Axle: Height and Length Measurements.

TABLE 3-4. T300 w/ Single Rear Axle: Overall Dimensions [inches (mm)].

WB	A	AF	B	CA *	UNLADEN D **
145 (3683)	237.2 (6025)	55 (1397)	37.2 (945)	77 (1956)	104.9 (2664)
150 (3810)	237.2 (6025)	50 (1270)		82 (2083)	
160 (4064)	261.2 (6634)	64 (1626)		92 (2337)	
185 (4699)	285.2 (7244)	63 (1600)		117 (2972)	
200 (5080)	309.2 (7854)	72 (1829)		132 (3353)	
215 (5461)	333.2 (8463)	81 (2057)		147 (3734)	
230 (5842)	357.2 (9073)	90 (2286)		162 (4115)	
245 (6223)	381.2 (9682)	99 (2515)		177 (4496)	
260 (6604)	405.2 (10292)	108 (2743)		192 (4877)	
280 (7112)	429.2 (10902)	112 (2845)		212 (5385)	

***** CA measured from true back of cab to rear axle centerline
****** Determined with Front Tire Bridgestone R250F 295/75R22.5

Side View — T300 with Tandem Rear Axle

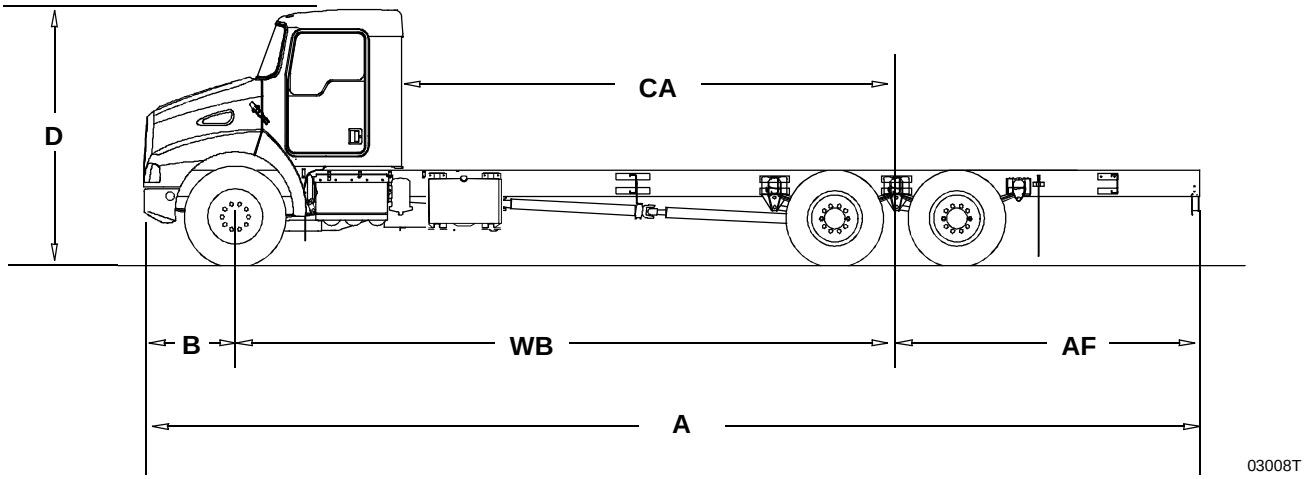

Figure 3–2. T300 W/ Tandem Rear Axle: Height and Length Measurements.

TABLE 3-5. T300 w/ Tandem Rear Axle: Overall Dimensions [inches (mm)].

WB	A	AF	B	CA *	D **
175 (4445)	283.2 (7193)	71 (1803)	37.2 (945)	107 (2718)	104.9 (2664)
190 (4826)	307.2 (7803)	80 (2032)		122 (3099)	
205 (5207)	331.2 (8412)	89 (2261)		137 (3480)	
220 (5588)	355.2 (9022)	98 (2489)		152 (3861)	
235 (5969)	379.2 (9632)	107 (2718)		167 (4242)	
250 (6350)	403.2 (10241)	116 (2946)		182 (4623)	
260 (6604)	427.2 (10851)	130 (3302)		192 (4877)	

***** CA measured from true back of cab to rear axle centerline
****** Determined with Front Tire Bridgestone R250F 295/75R22.5

Front and Rear Views — T300

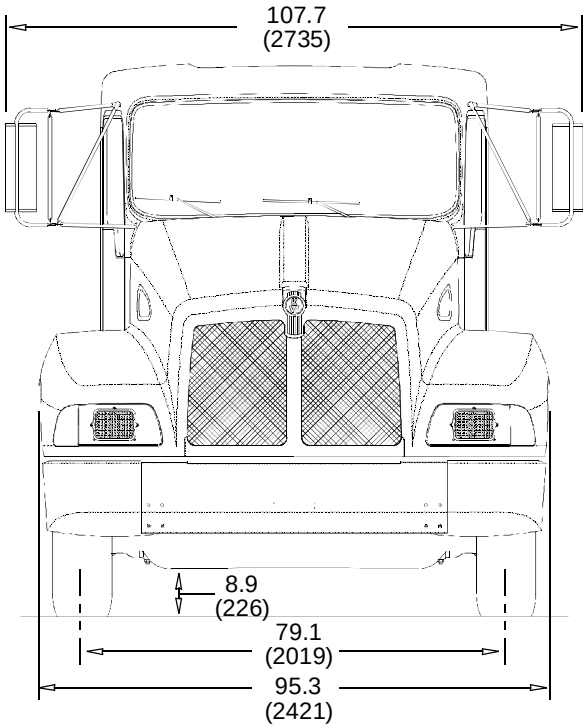

Figure 3–3. T300 Front View: Width and Ground Clearance Measurements [inches (mm)].

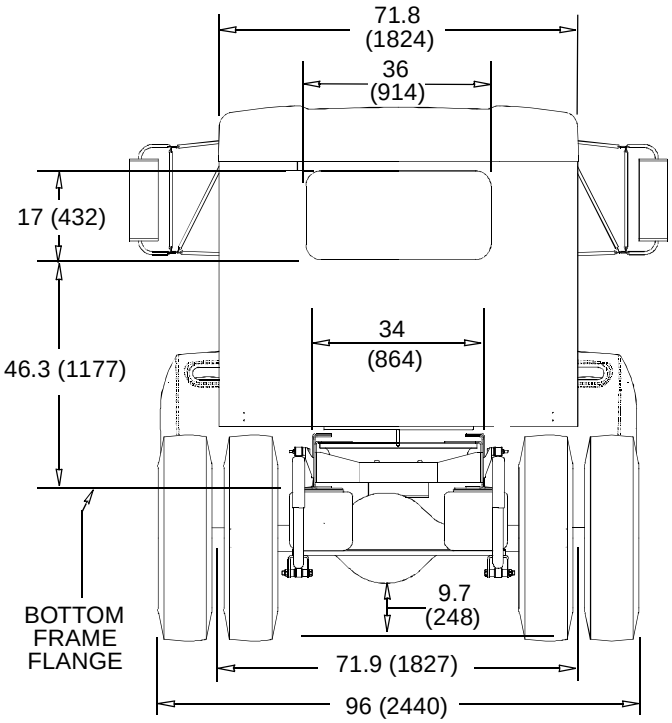

Figure 3–4. T300 Rear View: Width and Ground Clearance Measurements [inches (mm)].

DETAIL VIEWS

Side View Detail — T300

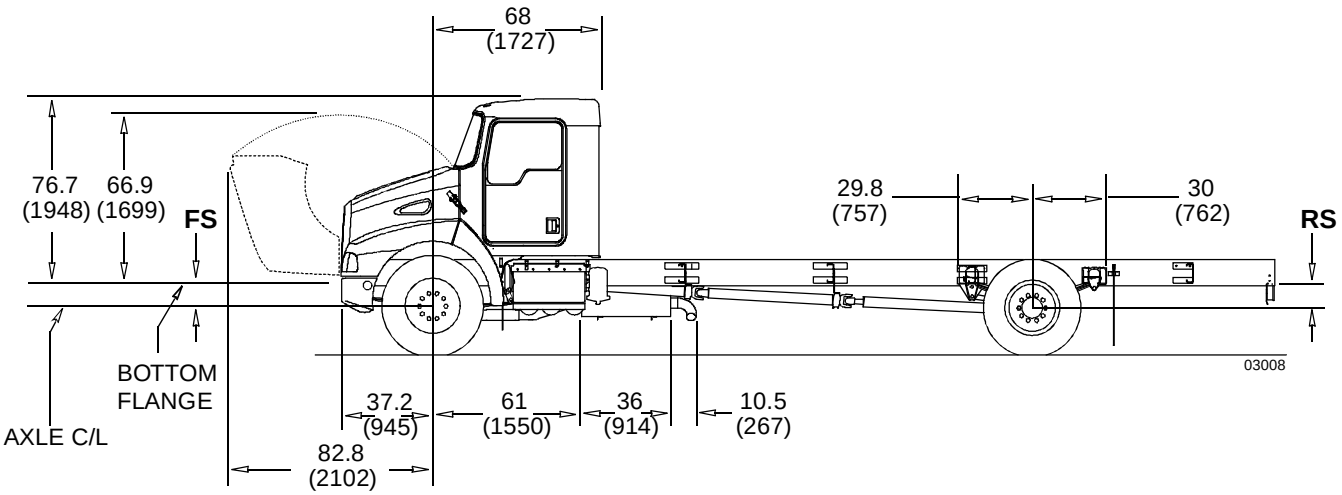

Figure 3–5. T300 Detailed Side View: Specific Measurements [inches (mm)].

TABLE 3-6. T300 Front and Rear Suspension (FS/RS) Centerline (C/L) to Rail Measurements.

	LOAD	REAR SUSPENSION	CENTERLINE OF AXLE TO BOTTOM FLANGE OF RAIL [IN. (MM)]	
			FS	RS
SINGLE REAR AXLE	UNLADEN	REYCO 79KB	8.4 (213)	9.0 (229)
	LADEN		6.6 (168)	6.6 (168)
	UNLADEN	HENDRICKSON HAS 210L/230L	8.4 (213)	7.8 (198)
	LADEN		6.6 (168)	7.8 (198)
TANDEM REAR AXLE	UNLADEN	REYCO 102	8.4 (213)	8.5 (216)
	LADEN		6.6 (168)	7.2 (183)
	UNLADEN	HENDRICKSON HAS 402	8.4 (213)	7.8 (198)
	LADEN		6.6 (168)	7.8 (198)
	UNLADEN	HENDRICKSON RT2-400	8.4 (213)	8.6 (218)
	LADEN		6.6 (168)	7.6 (193)

Left Side: Step and Cab Floor Height — T300

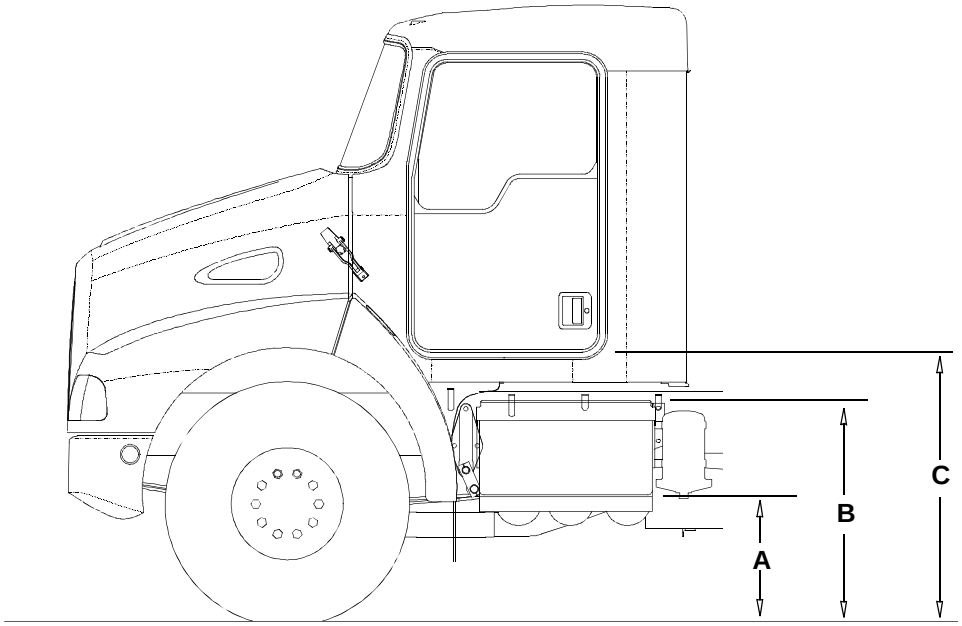

Figure 3–6. T300 Battery Box Step and Cab Floor: side view, left side.

TABLE 3-7. T300 Battery Box Step and Cab Floor Measurements.

POSITION	UNLADEN IN. (MM)	LADEN IN. (MM)
A FIRST STEP	21.3 (540)	18.9 (481)
B SECOND STEP	37.0 (940)	34.7 (881)
C CAB FLOOR	44.6 (1133)	42 (1069)

Right Side: Step and Cab Floor Height — T300

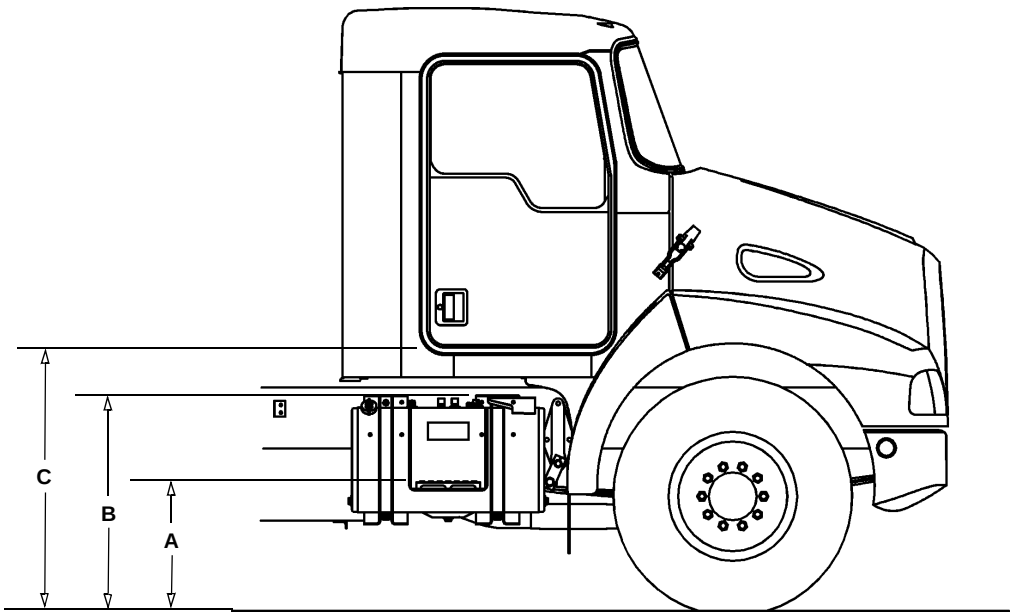

9707211

Figure 3–7. T300 Fuel Tank Step and Cab Floor: side view, right side.

TABLE 3-8. T300 Fuel Tank Step and Cab Floor Measurements.

POSITION	UNLADEN IN. (MM)	LADEN IN. (MM)
A FIRST STEP	23.3 (592)	21.0 (533)
B SECOND STEP	38.1 (967)	35.8 (908)
C CAB FLOOR	44.6 (1133)	42 (1069)

Crossmember Locations — T300

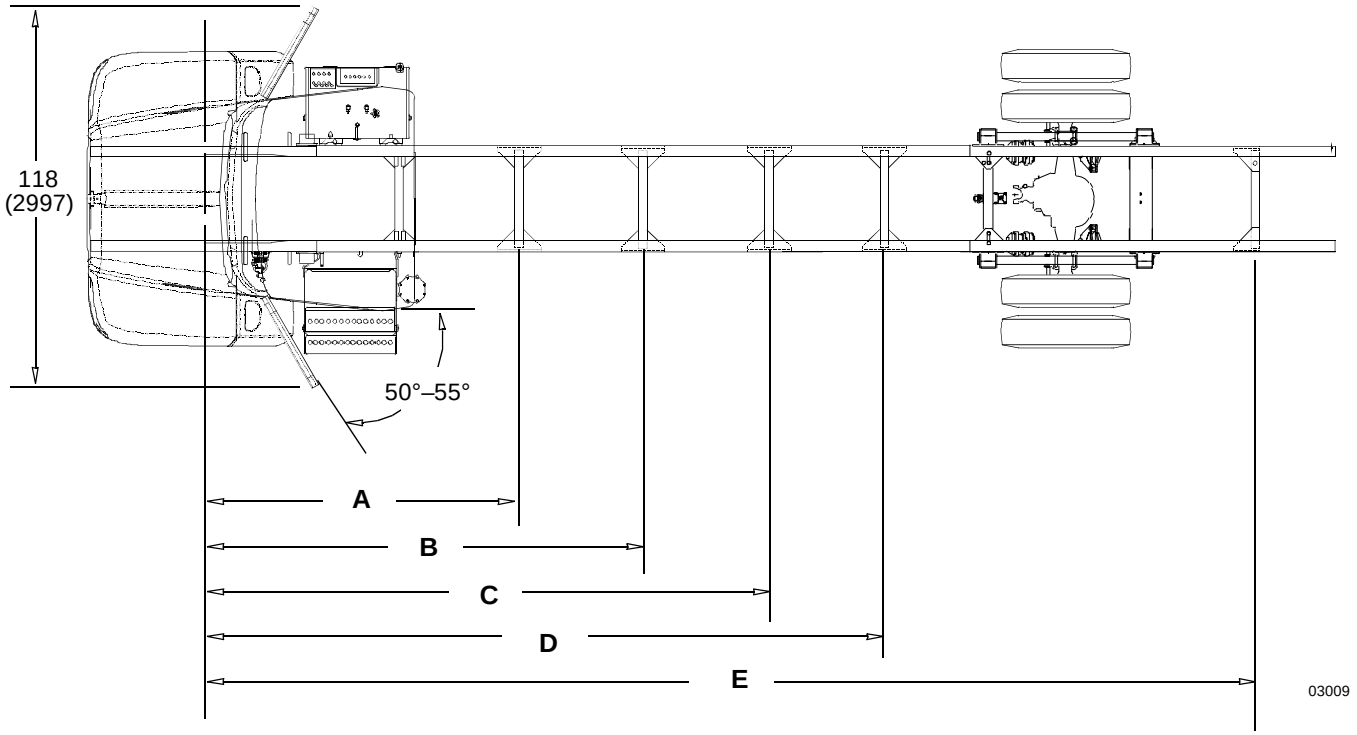

Figure 3–8. T300 Crossmember Location and Overall Width with Doors Open.

TABLE 3-9. T300 Crossmember Locations: measured from front axle centerline [inches (mm)].

WHEELBASE	A	CB	B	CB	C	CB	D	E
145	90.7 (2305)	— ①	—	—	—	—	—	—
146 - 150	79.7 (2025)	✓ ①	—	—	—	—	—	—
151 - 160	90.7 (2305)	✓	—	—	—	—	—	—
161 - 185	101.7 (2585)	✓	—	—	—	—	—	—
186 - 200	101.7 (2585)	✓	140.3 (3565)	—	—	—	—	—
201 - 215	90.7 (2305)	—	118.3 (3005)	✓	156.9 (3985)	—	—	279.4 (7097)
216 - 230	101.7 (2585)	✓	162.4 (4125)	✓	—	—	—	294.4 (7478)
231 - 245	101.7 (2585)	✓	162.4 (4125)	✓	—	—	—	309.4 (7859)
246 - 260	101.7 (2585)	✓	162.4 (4125)	✓	201 (5105)	—	—	324.4 (8240)
261 - 280	101.7 (2585)	✓	140.3 (3565)	—	178.9 (4545)	✓	217.5 (5525)	344.4 (8748)
TANDEM REAR AXLES								
157 - 177	90.7 (2305)	—	—	—	—	—	—	—
178 - 193	90.7 (2305)	✓	—	—	—	—	—	—
194 - 217	101.7 (2585)	✓	—	—	—	—	—	—
218 - 231	101.7 (2585)	✓	140.3 (3565)	—	—	—	—	—
232 - 247	90.7 (2305)	—	118.3 (3005)	✓	156.9 (3985)	—	—	325.4 (8265)
248 - 256	101.7 (2585)	✓	151.4 (3845)	✓	—	—	—	340.4 (8646)
257 - 262	101.7 (2585)	✓	156.9 (3985)	✓	—	—	—	350.4 (8900)
	✓ Driveline centerbearing (CB) mounted on this crossmember ① Dimensions noted are based on the use of the standard T300 transmission, rear axle, and driveline.							

Fuel Tank Locations — T300

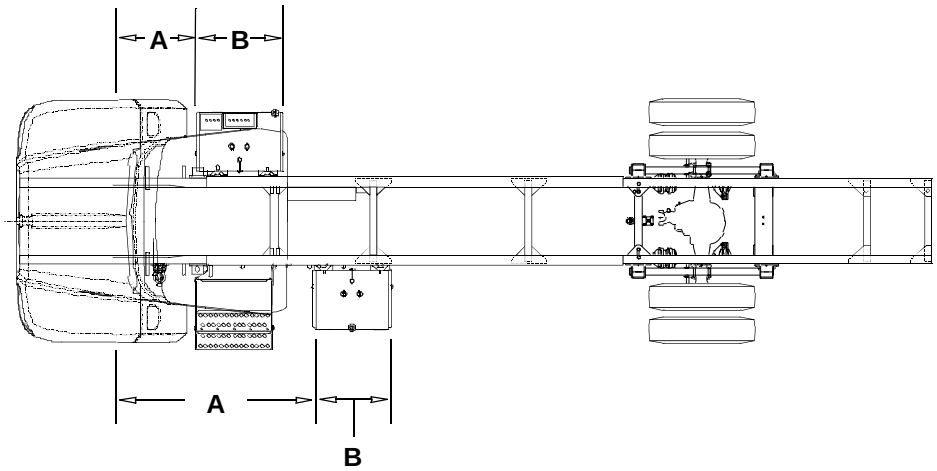

03011

Figure 3–9. T300 Fuel Tank Locations.

TABLE 3-10. T300 Fuel Tank Locations for Standard Wheelbase Configurations [inches (mm)].

FUEL TANK		A *	B
RH Under Cab			
Rectangular Steel	50 Gal	32.8 (833)	33.5 (851)
Round 22” Aluminum	56 Gal		35.6 (904)
	75 Gal		47.3 (1201)
	100 Gal		62.2 (1580)
	120 Gal		74.3 (1887)
LH Behind Cab			
Rectangular Steel	50 Gal	78.3 (1989)	30.5 (775)
	70 Gal	77.7 (1974)	42.6 (1082)
Round 22” Aluminum **	56 Gal	77.3 (1963)	35.6 (904)
	75 Gal		47.3 (1201)
	100 Gal		62.2 (1580)

* Measured from centerline of front axle

** Also RH Behind Cab.

COMPONENTS

Frame Rail Configurations — T300

10.5–INCH RAIL

YIELD: 80,000 psi

SECTION MODULUS: 16.75 cu in.

RBM: 1,340,000 lb. in.

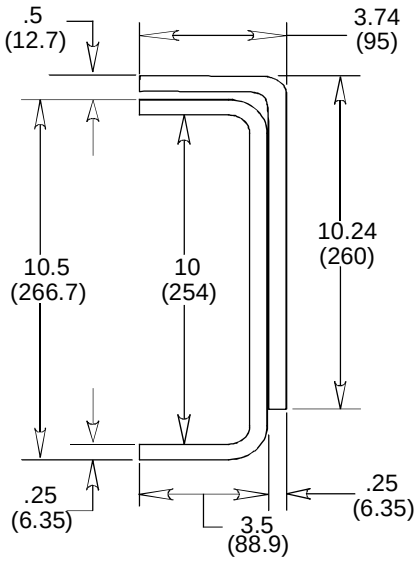

10.62–INCH RAIL HEAT TREATED

YIELD: 110,000 psi

SECTION MODULUS: 14.8 cu in.

RBM: 1,628,000 lb. in.

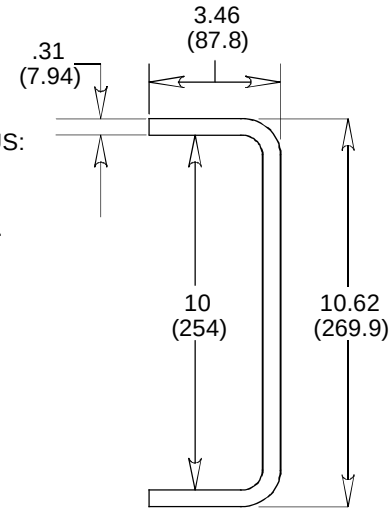

Figure 3–10. T300 10.5 and 10.62–Inch Rail Measurements [Inches (mm)] and Strength Characteristics.

Battery Box and Air Tanks — T300

STANDARD BATTERY BOX WITH AIR TANKS

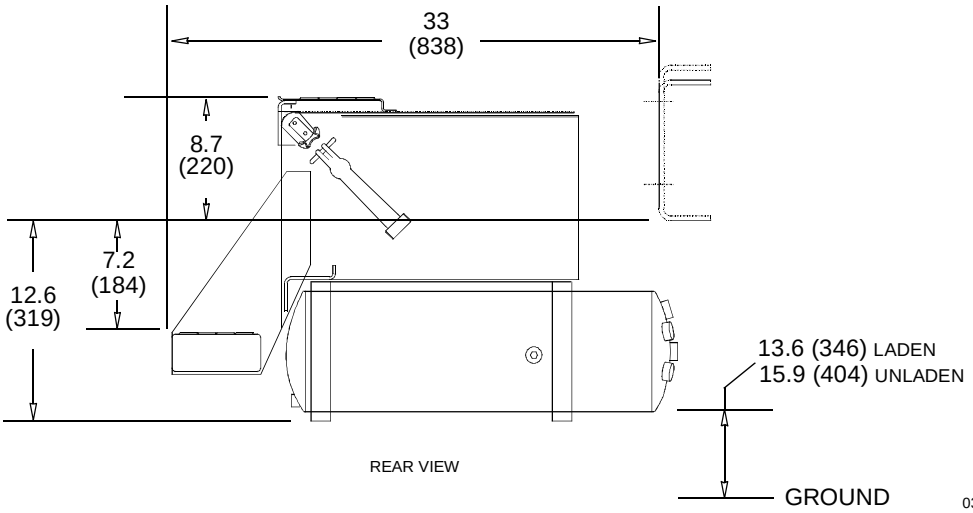

Figure 3–11. T300 Battery Box and Air Tank Measurements [Inches (mm)].

Fuel Tank and Exhaust — T300

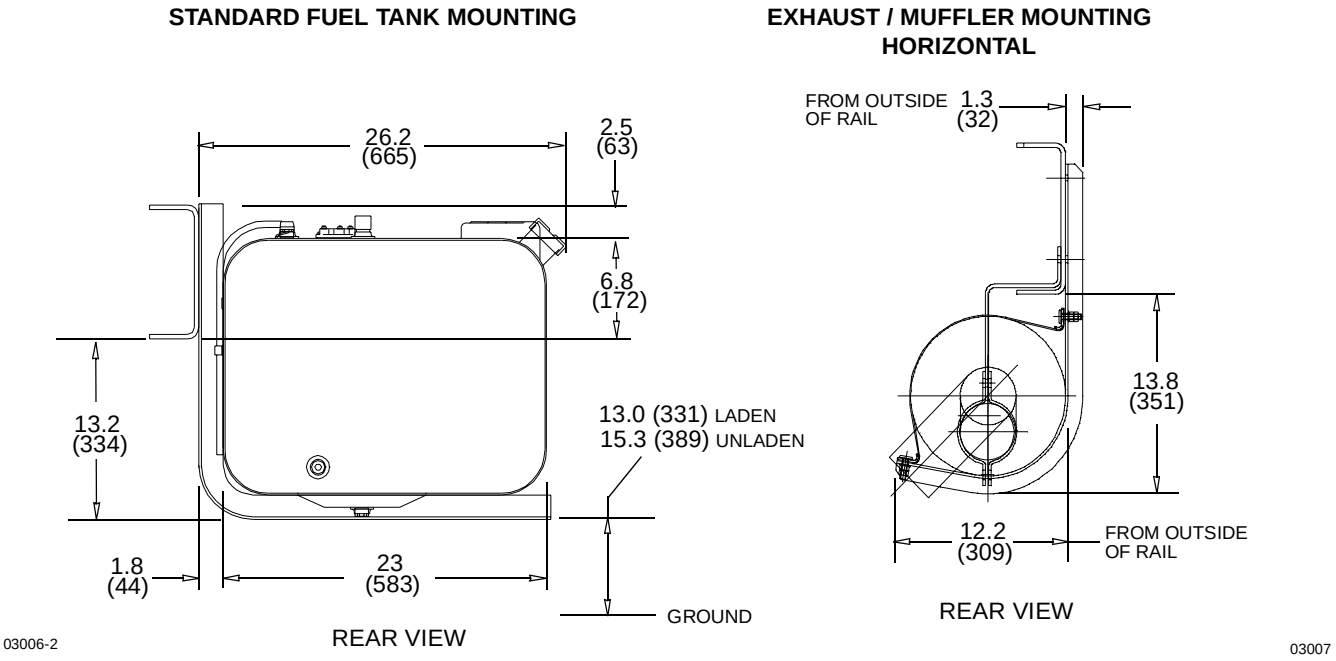

Figure 3–12. T300 Standard Fuel Tank and Exhaust Measurements [Inches (mm)].

22-inch Fuel Tanks — T300

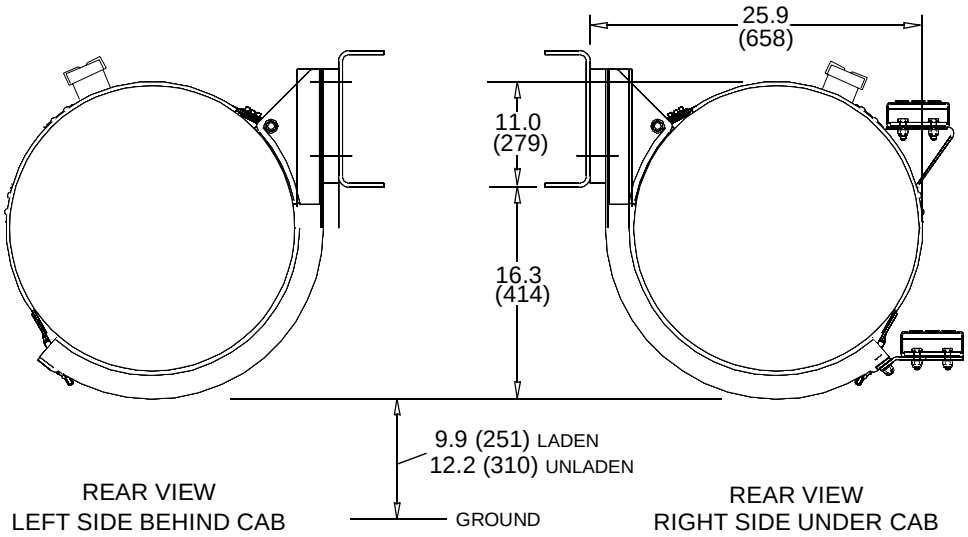

Figure 3–13. T300 Optional 22-inch Fuel Tank Mounting Measurements [Inches (mm)].

Horizontal Muffler-Vertical Tailpipe on Cab — T300

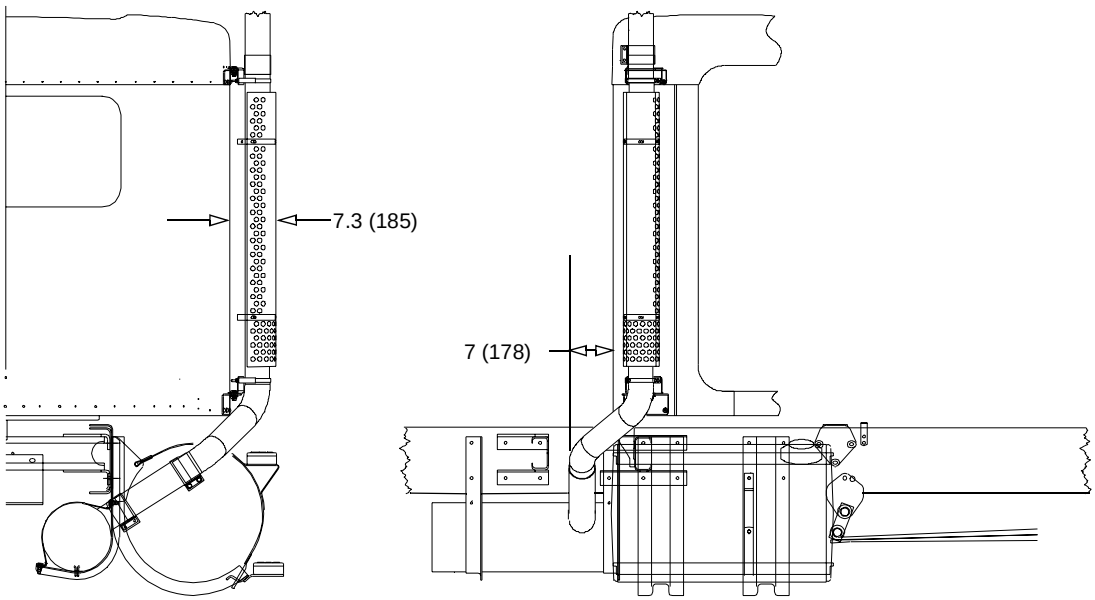

Figure 3–14. T300 Vertical Tailpipe on Side of Cab [Inches (mm)].

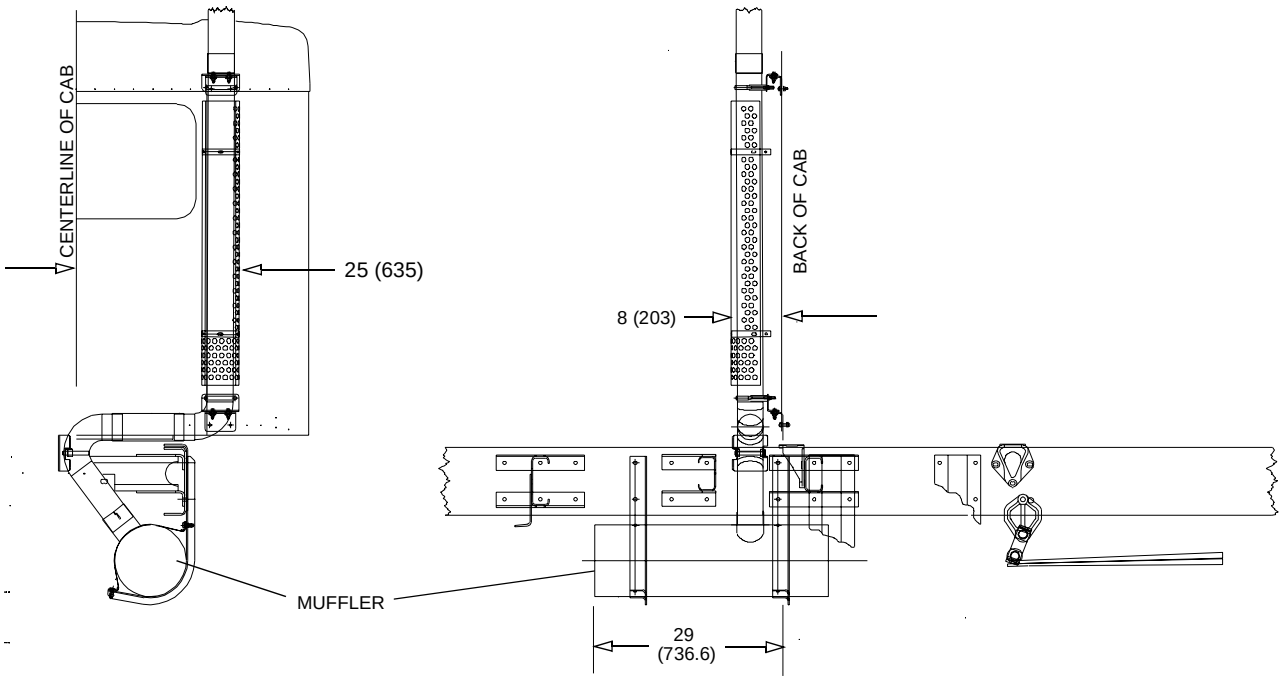

Figure 3–15. T300 Vertical Tailpipe on Back of Cab [Inches (mm)].

SECTION 4 **BODY MOUNTING**

CRITICAL CLEARANCES

Rear Wheels and Cab

CAUTION: Insufficient clearance between rear tires and body structure could cause damage to the body during suspension movement. Allow at least 8 inches clearance (See Figure 4–1.)

Normal suspension movement could cause contact between the tires and the body. To prevent this, mount the body so that the minimum clearance between the top of the tire and the bottom of the body is 8 inches (203mm). This should be measured with the body empty. See Figure 4–1.

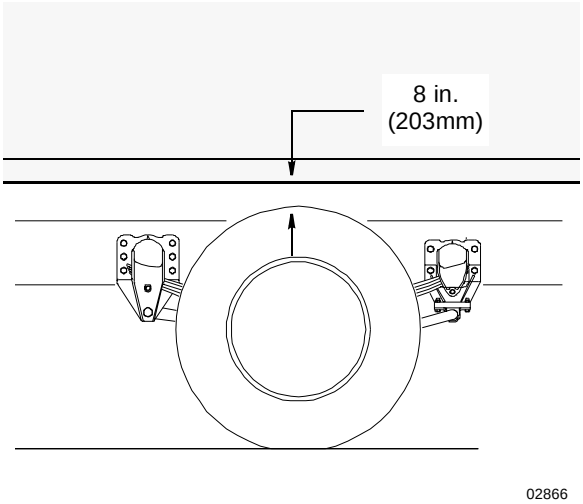

Figure 4–1. Minimum Clearance Between Top of Rear Tires and Body Structure Overhang.

CAUTION: Maintain adequate clearance between back of cab and the front (leading edge) of mounted body. See Figure 4–2.

NOTE: Be sure to provide maintenance access to battery box and fuel tank fill neck.

The true distance from the centerline of the front axle to the back of the cab is 68 inches (1727 mm). It is recommended that the leading edge of the body be mounted

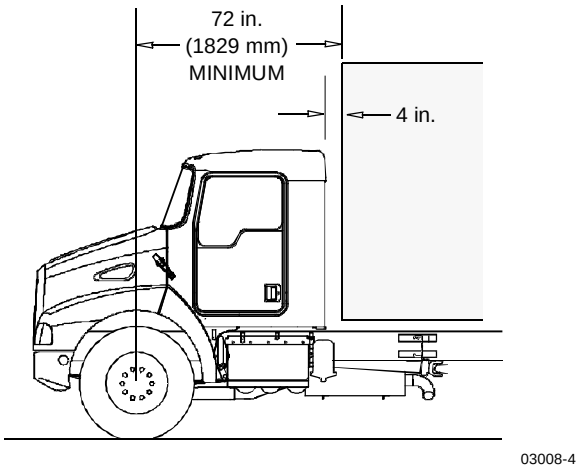

Figure 4–2. Minimum Back–of–Cab Clearance.

a minimum of 4 inches (102 mm) behind the cab. The result is a minimum back–of–cab clearance of 72 inches (1829 mm) from the front axle to the leading edge of the body.

- See SECTION 3 “DIMENSIONS” for further details on dimensions and clearances.
- Also, see APPENDIX B “WEIGHT DISTRIBUTION” for explanation of back–of–cab (BOC) / CA calculations.

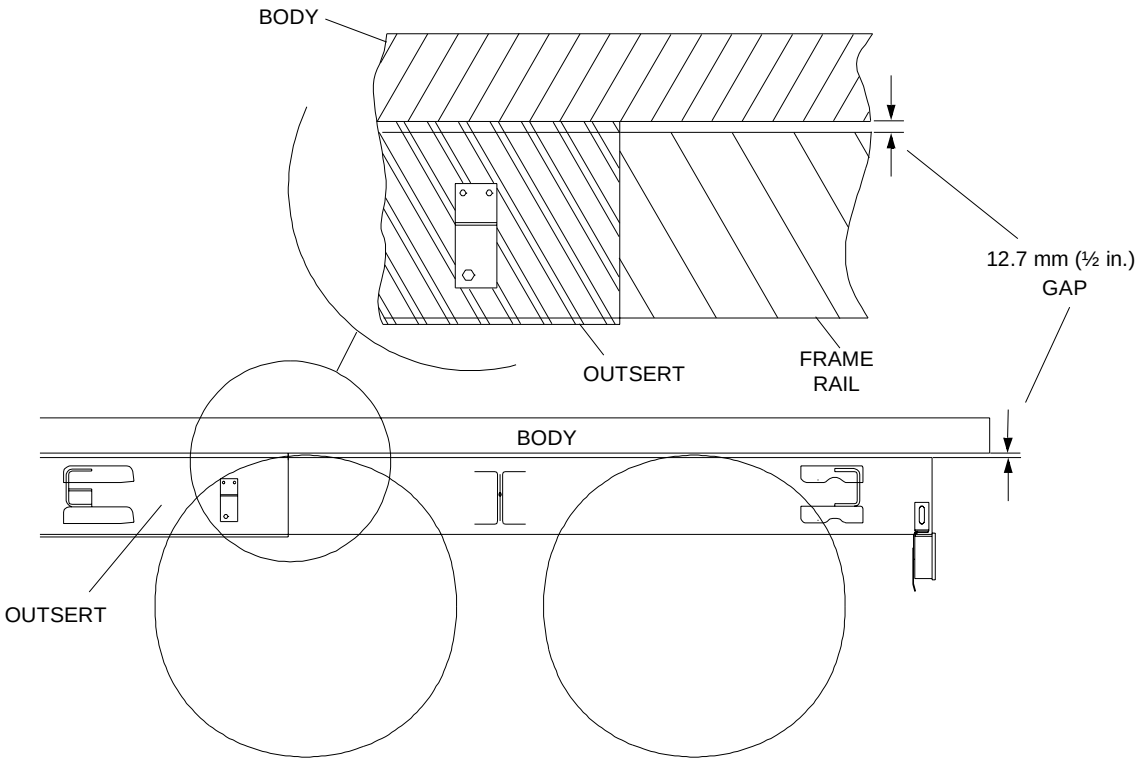

Figure 4–3. Air Gap with Frame Rail with Outsert

Chassis with Outserts

A 10½-inch non-heat treated frame rail with an outsert will have an air gap of approximately 6.4 mm (¼ inch) between the bottom of the outsert flange and the top of the frame rail flange. This gap is for manufacturing tolerance purposes and guarantees that the outsert will fit over the frame rail.

WARNING! If the frame rail flanges are modified or damaged, the rail could fail prematurely and cause an accident. When mounting a body to the chassis, DO NOT drill holes in the upper or lower flange of the frame rail. Mount the body using body mounting brackets or U–bolts.

Install a 12.7 mm (½ inch) thick spacer on the frame rail aft of the outsert to support the body. The purpose of the spacer is to fill the "gap" See Figure 4–3. above.

BODY MOUNTING USING BRACKETS

CAUTION: Always install a spacer between the body subframe and the top flange of the frame rail.

Installation of a spacer between the body subframe and the top flange of the frame rail will help prevent premature wear of the components due to chafing or corrosion.

Frame Sill

If the body is mounted to the frame with brackets, we recommend that the frame sill spacer be made from a strip of rubber or plastic (delrin or nylon). These materials will not undergo large dimensional changes during periods of high or low humidity. The strip will be less likely to fall out during extreme relative motion between body and chassis. See Figure 4–4.

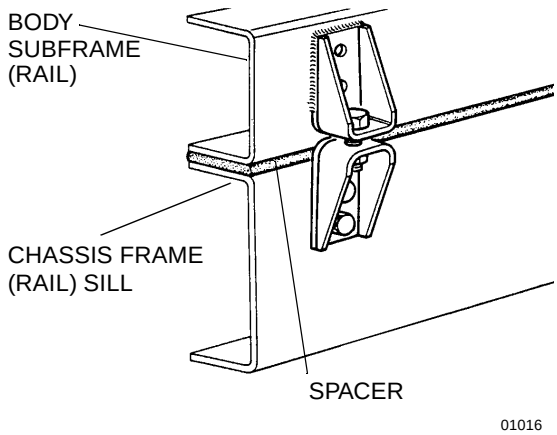

Figure 4–4. Spacer Between Frame Sill and Body Rail — Rubber or Plastic.

Brackets

When mounting a body to the chassis with brackets, we recommend designs that offer limited amount of relative movement, bolted securely but not too rigid. Brackets should allow for slight movement between the body and the chassis. For instance, Figure 4–5 shows a high compression spring between the bolt and the bracket.

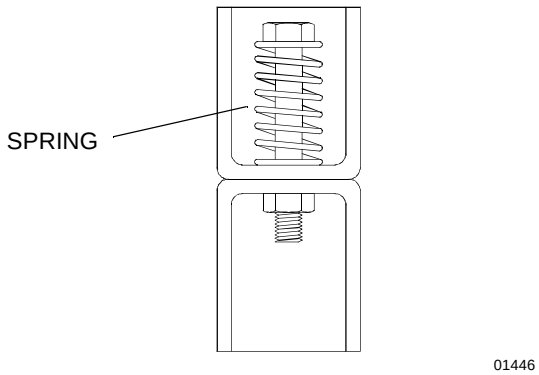

Figure 4–5. High Compression Spring Between the Mounting Bolt and Upper Bracket.

Another possibility is mounting a rubber spacer between the brackets. See Figure 4–6.

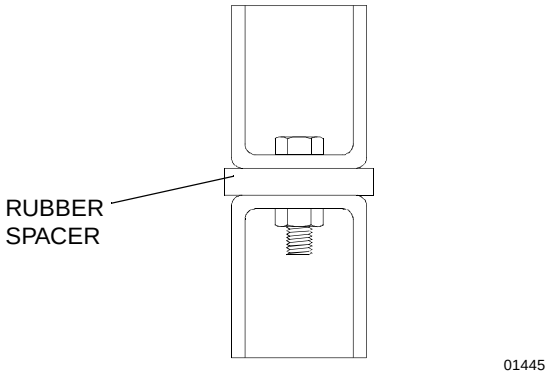

Figure 4–6. Rubber Spacer Between Brackets.

These designs will allow relative movement between the body and the chassis during extreme frame racking situations. Extreme frame racking, and mountings that are too rigid, could cause damage to the body. This is particularly true with tanker installations.

Mounting Holes

When installing the lower bracket on frame rails the mounting holes in the chassis frame bracket and frame rail must comply with the general spacing and location guidelines illustrated in Figure 4–7. The hole diameter should not exceed the bolt diameter by more than .060 inches (1.5mm).

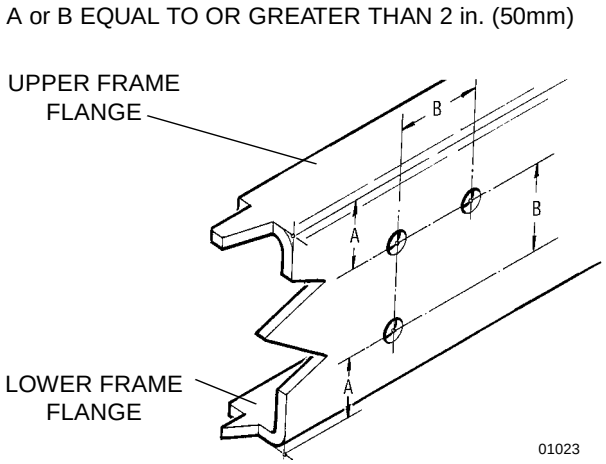

Figure 4–7. Hole Location Guidelines for Frame Rail and Bracket.

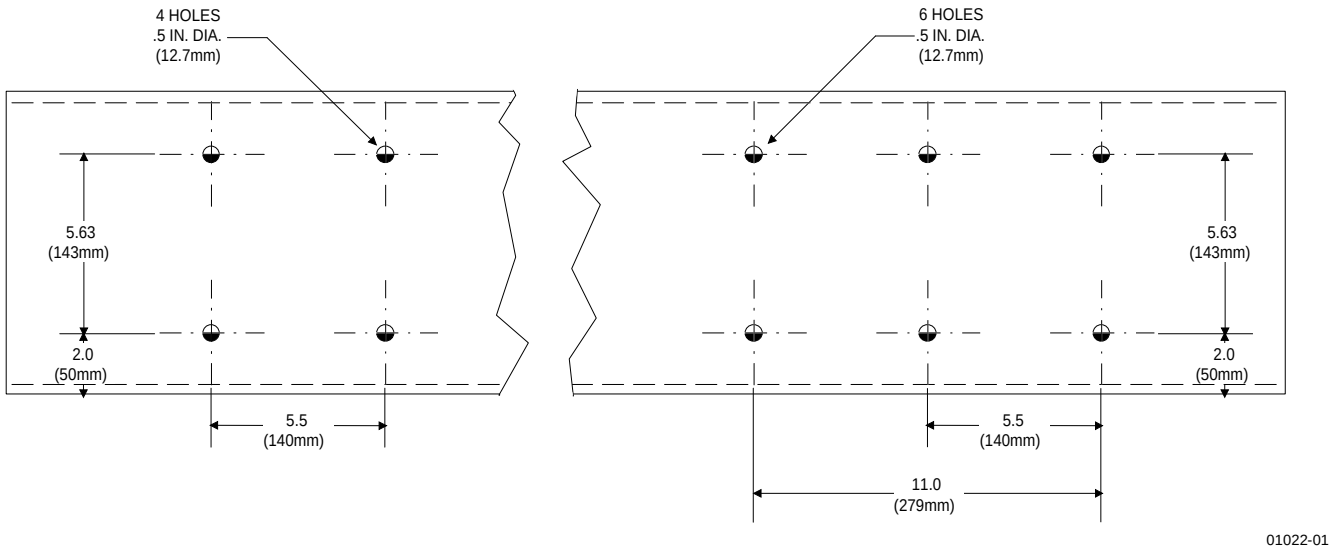

Figure 4–8. Crossmember–Gusset Hole Pattern Requirements.

Frame Drilling

***WARNING!* When mounting a body to the chassis, DO NOT drill holes in the upper or lower flange of the frame rail. If the frame rail flanges are modified or damaged, the rail could fail prematurely and cause an accident. Mount the body using body mounting brackets or U–bolts.**

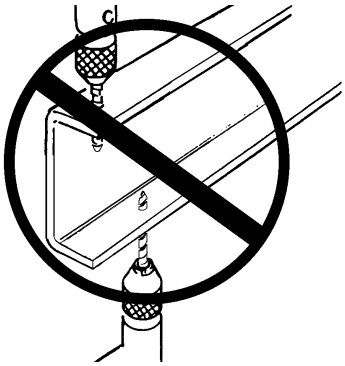

WARNING! Do not drill new holes any closer than 2 inches (50mm) to existing holes. Frame drilling affects the strength of the rails.

Hole Location Guidelines

Holes must be located from the flange as indicated in Figure 4–7. They must be no closer than 2 inches (50mm) to each other.

NOTE: If your design permits placement of body mounting brackets at crossmember locations, you can use the crossmember gusset bolt holes for body mounting. See Figure 4–8.

CAUTION: Use care when drilling the frame web so the wires and air lines routed inside the rail are not damaged.

BODY MOUNTING USING U–BOLTS

Spacers

If the body is mounted to the frame with U–bolts, use a hardwood sill (minimum 1/2 inch (12 mm) thick) between the frame rail and body frame to protect the top surface of the rail flange.

WARNING! Do not allow the frame rails or flanges to deform when tightening the U–bolts. It will weaken the frame and could cause an accident. Use suitable spacers made of steel or hardwood on the inside of the frame rail to prevent collapse of the frame flanges.

- ***Use a hardwood spacer between the bottom flange and the U–bolt to prevent the U–bolt from notching the frame flange. See Figure 4–9.***

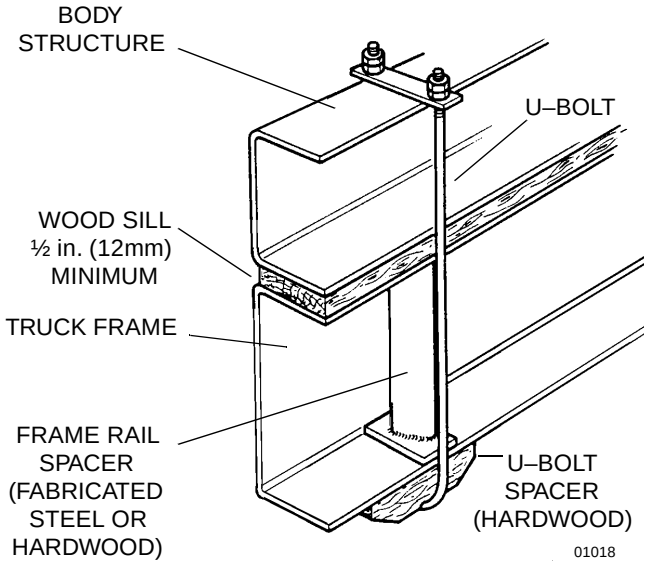

Figure 4–9. Acceptable U–Bolt Mounting with Wood and Fabricated Spacers.

WARNING! Do not allow spacers and other body mounting parts to interfere with brake lines, fuel lines, or wiring harnesses routed inside the frame rail. Crimped or damaged brake lines, fuel lines, or wiring could result in loss of braking, fuel leaks, electrical overload or a fire. Carefully inspect the installation to ensure adequate clearances for air brake lines, fuel lines, and wiring. See Figure 4–10.

CAUTION: Mount U–bolts so they do not chafe on frame rail.

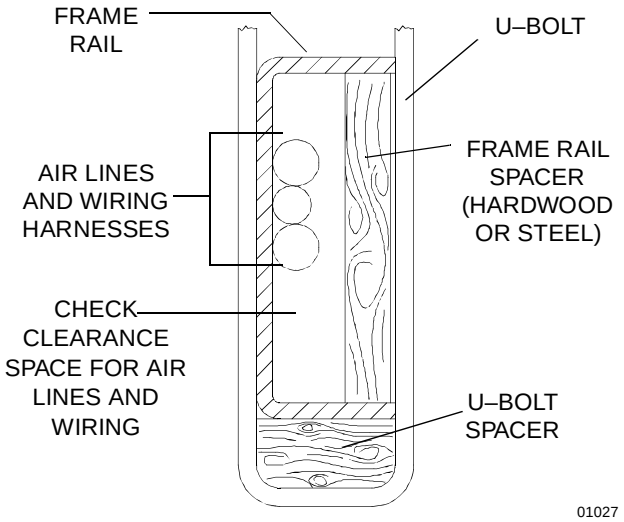

Figure 4–10. Clearance Space for Air Lines and Cables.

WARNING! Do not notch frame rail flanges to force a U–bolt fit. Notched or damaged frame flanges could result in premature frame failure. Use a larger size U–bolt.

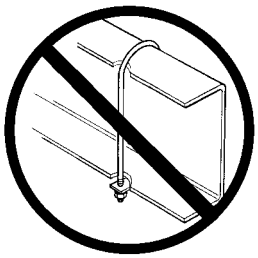

Rear Body Mount

When U–bolts are used to mount a body we recommend that the last body attachment be made with a “fishplate” bracket. See Figure 4–11. This provides a firm attaching point and helps prevent any relative fore or aft movement between the body and frame.

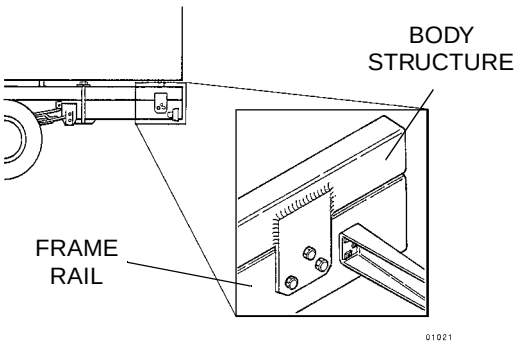

Figure 4–11. Example of Fishplate Bracket at Rear End of Body, used with U–Bolts.

SECTION 5 FRAME MODIFICATIONS

INTRODUCTION

There are ten standard wheelbase choices for the T300 with a single rear axle (145 to 280 inches) and seven choices available with tandem rear axles. In addition, the T300 offers customer specified wheelbases. So, in most cases frame modifications to produce a certain wheelbase should not be necessary.

However, some installations may require slight modifications, while other installations will require extensive modifications. Sometimes an existing dealer stock chassis may need to have the wheelbase changed to better fit a customer's application. The modifications may be as simple as shortening or lengthening the frame cutoff, or they may be as complex as changing the wheelbase.

DRILLING RAILS

Location and Hole Pattern

If holes need to be drilled to attach anything to the rail, see SECTION 4 "BODY MOUNTING" for more information. Follow the general spacing and hole location guidelines on Page 4–3, Figure 4-6.

WARNING! When mounting a body to the chassis, DO NOT drill holes in the upper or lower flange of the frame rail. If the frame rail flanges are modified or damaged, the rail could fail prematurely and cause an accident. Mount the body using body mounting brackets or U–bolts.

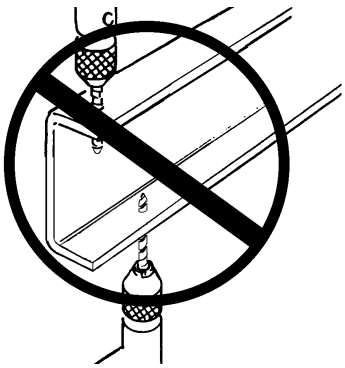

WARNING! Do not drill new holes any closer than 2 inches (50mm) to existing holes. Frame drilling affects the strength of the rails.

CAUTION: Use care when drilling the frame web so the wires and air lines routed inside the rail are not damaged.

- ***Never use a torch to make a hole in the rail. Use the appropriate diameter drill bit.***

Hole pattern dimensions for crossmember designs are illustrated in Page 4–3, Figure 4-7.

Hole diameter should not exceed the bolt diameter by more than .060 inches (1.5 mm).

MODIFYING FRAME LENGTH

The frame cutoff after the rear axle can be shortened to match a particular body length. Using a torch is acceptable; however, heat from a torch will affect the material characteristics of the frame rail. The affected material will normally be confined to within 1 to 2 inches (25 to 50mm) of the flame cut and may not adversely affect the strength of the chassis or body installation.

The frame cutoff can be lengthened by adding frame extenders.

When extending the rails, the additional sections can typically be welded to the existing rails. The joint should be welded and reinforced as illustrated in Figure 5–1.

NOTE: See page 5–4 for more information on welding frames.

Frame Insert

A frame insert must be added after welding a frame rail to compensate for lost strength. The insert should be of the same material as the frame member, or of steel, and at least equal to the frame rail in thickness.

Attachment of the insert to the frame should be made with Ream-Fit heat-treated bolts, 5/8 in. (16 mm) dia. or the next larger size. Both the reinforcement and frame

holes should be reamed to provide a fit of from .001 in. to .003 in. (.025 to .076 mm) clearance. Do not weld reinforcing members. The insert should span a distance of at least 24 in. (610 mm) on either side of the crack to insure an even distribution of stresses. Cut the ends of the insert at 45° as shown in Figure 5–2 unless the insert extends to the end of the frame.

Where possible, use existing bolt holes to attach the insert to the frame. Bolt holes must not be located closer to the frame flanges than the present bolt pattern.

If the insert is placed in a section of the main frame where few bolts are located, additional bolts are required. Use the following guideline for locating additional bolt holes.

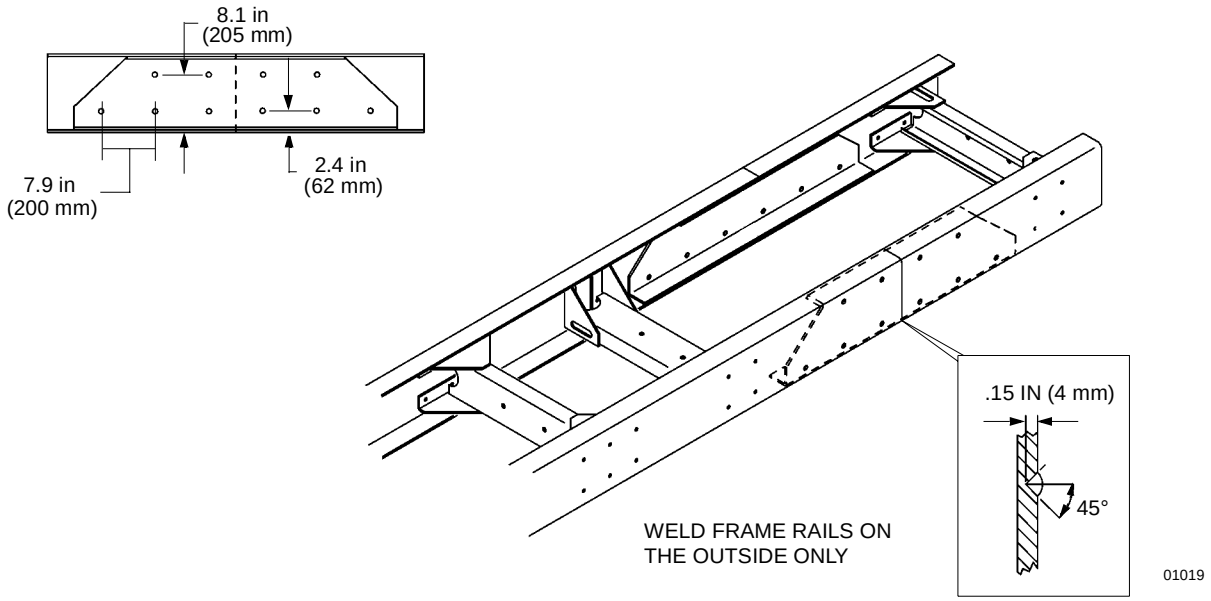

Figure 5–1. Detail of Frame Extensions and Joint Welding.

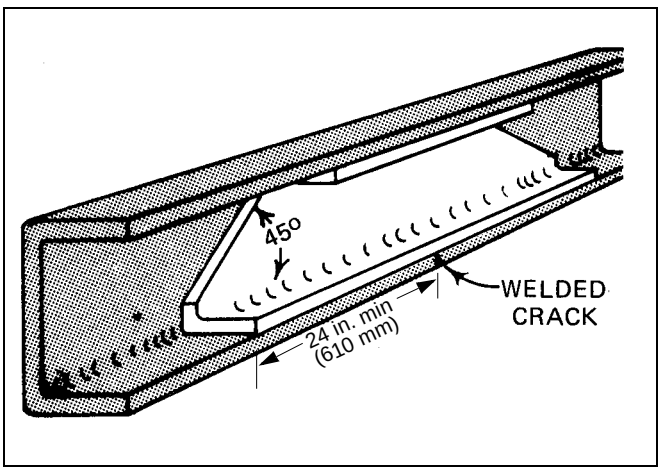

Figure 5–2. Frame Insert

Changing Wheelbase

We do not recommend modifying the wheelbase. Occasionally, however, a chassis wheelbase will need to be reduced or lengthened. When this needs to be done there are a few guidelines that should to be considered.

WARNING! When changing the wheelbase, be sure to follow the driveline manufacturer's recommendations for driveline length or angle changes. Incorrectly modified drivelines can fail prematurely due to excessive vibration. This can cause an accident.

Before changing the wheelbase the driveline angles of the proposed wheelbase need to be examined to ensure that no harmful vibrations are created. Consult the driveline manufacturer for appropriate recommendations.

WARNING! Do not drill new holes any closer than 2 inches (50mm) to existing holes. Frame drilling affects the strength of the rails.

Before the rear suspension is relocated, check the new location of the spring hanger brackets. The new holes for the spring hanger brackets must not overlap existing holes and should not come any closer than 2 inches (50mm) to existing holes in the frame.

WARNING! When relocating a suspension bracket, do not mount it on the extended (added) section of a frame rail. The suspension loading could result in premature failure of the added section splice. This could cause an accident. Use care when planning the wheelbase so that the rear suspension bracket is always mounted on the original rail section. See Figure 5–3.

If you are extending the wheelbase, you may also have to extend the frame length to accommodate a body. When you reposition the rear suspension spring hangers, do not mount them on the added extended portion of the rail. The relocated rear suspension bracket should be located on the original frame rails. See Figure 5–3.

When reducing the wheelbase, we recommend that the suspension be moved forward and relocated on the original rail. The rail behind the suspension can then be cut to achieve the desired frame cutoff. See Figure 5–3.

WARNING! Do not drill new holes any closer than 2 inches (50mm) to existing holes. Frame drilling affects the strength of the rails.

Before the rear suspension is relocated, check the new location of the spring hanger brackets. The new holes for the spring hanger brackets must not overlap existing holes and should not come any closer than 2 inches (50mm) to existing holes.

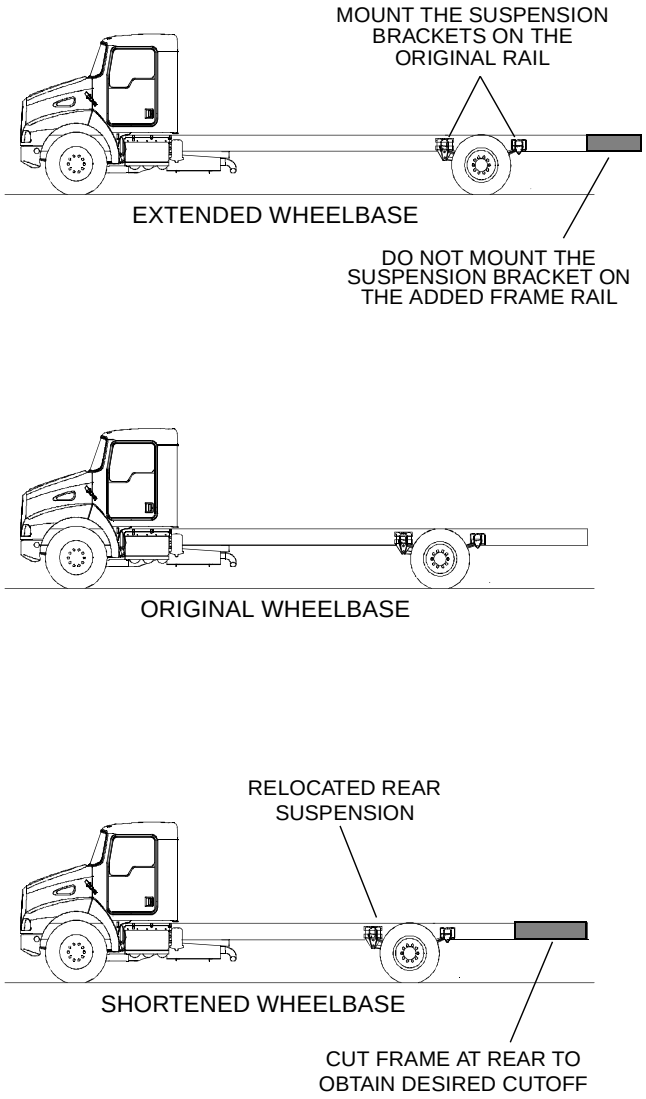

Figure 5–3. Comparison of Original, Shortened, and Extended Wheelbases.

Crossmembers

After changing a wheelbase, an additional crossmember may be required to maintain the original frame strength.

- The maximum allowable distance between adjacent crossmembers is 60 inches (1524 mm). If the distance between adjacent crossmembers exceeds this dimension, add a crossmember between them. See Figure 5–4.

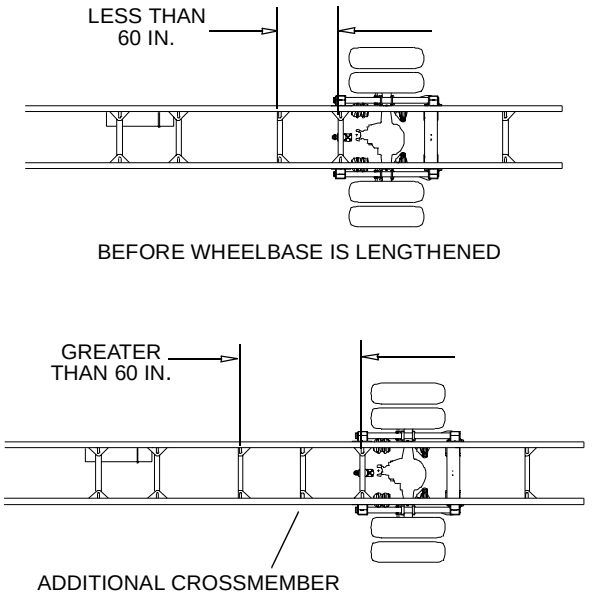

Figure 5–4. Crossmember Added When Distance Exceeds 60 Inches (1524mm).

WELDING

The 10.5 inch frame rail on the T300 is non–heat treated steel and can be welded using the following precautions. However, **the 10.62 inch rail is heat treated; therefore, it is not weldable.**

Precautions

CAUTION: Before welding, disconnect the negative terminal battery cable.

- ***Disconnect alternator terminals to avoid potential damage to the voltage regulator and/or alternator.***

CAUTION: The 10.62 (10 5/8) inch rail is heat treated; therefore, it is not weldable.

The 10.5 inch frame is non-heat treated VAN 80 High Strength Low Alloy (HSLA) steel. Use the following guidelines when welding this material.[1]

- Due to low carbon and alloy contents, VAN steels possess good characteristics for welding and are resistant to hot and cold cracking. Preheating and postheating is not required when welding VAN steels. Even with high heat inputs, joint efficiencies (strength of weld compared to that of base metal) of 95 to 100 percent can be obtained.
- For best results when arc welding, use a E 10018 (low hydrogen) electrode. Along with shielded arc welding, VAN steels can be readily welded with gas metal arc (manual or semi-automatic) or submerged arc welding techniques. For details concerning specific welding techniques refer to welding wire manufacturers for recommendations.

1. Welding Guidelines: Jones & Lauglin “VAN STEEL” Data Sheet.

SECTION 6 ELECTRICAL

INTRODUCTION

Electrical wiring can sometimes be very frustrating. This is especially true when adding circuits to an existing setup. Through the use of a prewired body harness, we have tried to reduce the complexity associated with adding common circuits to a body installation.

NOTE: The most common circuits that body builders may need are preconnected to this wiring harness.

The new body related circuits can be added by connecting the added circuit wires to the appropriate wires in this harness.

ELECTRICAL CIRCUITS

Capacity

WARNING! Do not install an electrical circuit that requires more amperage (electrical capacity) than what is available in the specific chassis circuit. An overloaded circuit could cause a fire. Compare the amperage requirements of the new circuit to the electrical current capacity of the existing chassis circuit before adding the body or other equipment.

When adding an electrical circuit, you must know the current capacity (amperes) of each circuit.

The capacity of the existing system in the chassis must be enough to power the additional circuit. The new circuit will require a certain amount of power to operate; so, the existing (battery or alternator) power source must have the capacity to provide additional power or the new circuit will not function properly.

Check the current (ampere) demand of the circuit to be added. Compare it to the current capacity of the circuit you are connecting into. The current carrying capacity of the wires, controls, switches, and circuit breakers that provide current to the circuit must be equal to or greater than the demand of the added circuit otherwise these components may not work properly. See Table 6–2 on page 6–2 for relevant circuit information.

Prewired Body Harness

The prewired body harness can be connected to the chassis harness through a connector mounted on the left hand frame rail directly behind the battery box. See Figure 6–1.

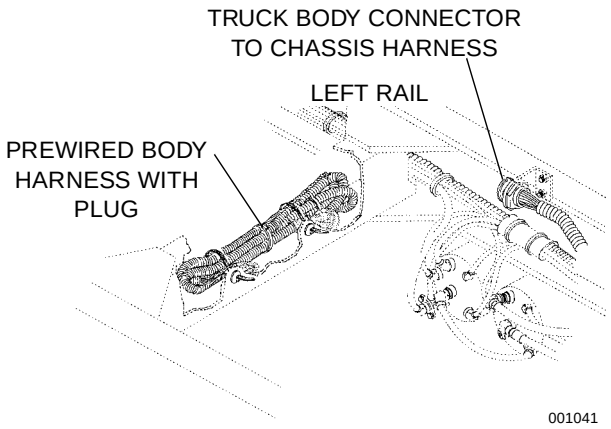

Figure 6–1. Location of Prewired Body Harness Connection.

For shipping purposes the body harness is coiled and mounted to the crossmember. The body harness wire ends are tagged with circuit markers, identifying the connecting circuit. See Figure 6–2 and 6–3 on the next pages.

Fuse and Circuit Identification

Fuses protect each wire (see CAPACITY in Figures 6-1 and 6-2 for capacity of each circuit). These are separate circuits; so by connecting to them, you will not affect the existing circuit in the chassis.

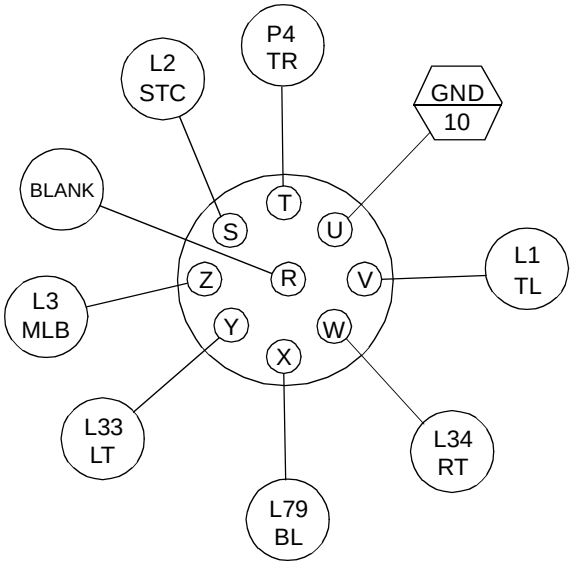

(For chassis built prior to First Quarter 1998)

WIRE DESCRIPTION	FUNCTION	PIN	CIRCUIT	WIRE COLOR	CAPACITY (AMPERES)	FUSE NUMBER	WIRE GAUGE
BACKUP LP	BACKUP LAMP/ ALARM	X	L79BL	PINK / WHITE	10	29	12
RH TURN	RIGHT TURN SIGNAL LAMP	W	L34RT	GREEN / BLACK	15	1	14
LH TURN	LEFT TURN SIGNAL LAMP	Y	L33LT	YELLOW / BLACK	15	1	14
AUX PWR	AUXILIARY POWER, BODY OR TRAILER	T	P4TR	BLUE	10	14	12
CLEARANCE LP	MARKER/ CLEARANCE LAMPS	Z	L3MLB	BLACK	15	6	12
STOP LP	BRAKE LAMP	S	L2STC	RED	15	1	10
TAIL LP	TAIL LAMP	V	L1TL	BROWN	10	5	12
GND	GROUND	U	GND	WHITE			10

Figure 6–2. Prewired Truck and Body Harness (before 4/98)

(For chassis built after First Quarter 1998)

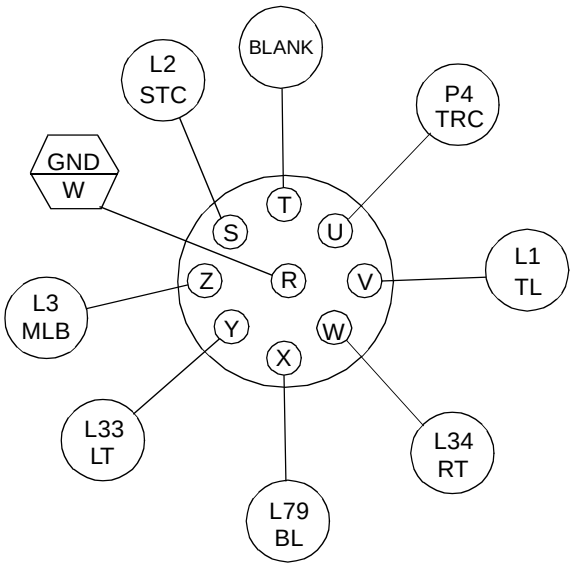

WIRE DESCRIPTION	FUNCTION	PIN	CIRCUIT	WIRE COLOR	CAPACITY (AMPERES)	FUSE NUMBER	WIRE GAUGE
BACKUP LP	BACKUP LAMP/ ALARM	X	L79BL	PINK / WHITE	10	29	12
RH TURN	RIGHT TURN SIGNAL LAMP	W	L34RT	GREEN / BLACK	20	1	12
LH TURN	LEFT TURN SIGNAL LAMP	Y	L33LT	YELLOW / BLACK	20	1	12
AUX PWR	AUXILIARY POWER, BODY OR TRAILER	U	P4TRC	BLUE	STD Config - IGN power 15 37 Optional config - BAT power 10 14		8
CLEARANCE LP	MARKER/ CLEARANCE LAMPS	Z	L3MLB	BLACK	15	6	12
STOP LP	BRAKE LAMP	S	L2STC	RED	20	1	8
TAIL LP	TAIL LAMP	V	L1TL	BROWN	15	5	12
GND	GROUND	R	GND	WHITE			6

Figure 6–3. Prewired Truck and Body Harness (after 3/98)

Circuits Wired Through the Ignition

The following circuits are powered on when the ignition key is turned to the ON position.

Right and Left Turn Signal
Backup Lamp

After the connections are made by splicing into the prewired body harness, the body components will have power when the similar chassis components receive power.

For instance, when the right hand turn signal is activated and the right hand turn signal light flashes on the cab, the right hand turn signal light on the installed body will also flash.

Connecting Ignition Circuits

Ignition circuits are tagged as follows:

Right Turn Signal

The right turn signal wire is tagged RH TURN and is green/black.

Left Turn Signal

The left turn signal wire is tagged LH TURN and is yellow/black.

Backup Lamp

The backup lamp wire is tagged BACKUP LP and is pink/white.

Ground

The ground wire is tagged GND and is white.

Auxiliary Power — (Standard config for chassis built after first quarter, 1998)

The auxiliary power circuit wire is tagged AUX PWR and is blue. Used for TRLR ABS if there is a trailer.

This aux power circuit is a 15 ampere capacity circuit, connected with a 15 ampere fuse, in the ignition circuit. This aux power circuit can be used only when the ignition switch is ON.

Circuits Wired to Battery

The following circuits are wired directly to the battery through a fuse and switch.

Auxiliary Power (Standard in chassis built prior to first qtr, 98; optional in later chassis, if there are no trailer connections.)
Brake Lamp
Tail Lamp
Clearance Lamps

When the prewired body harness is properly connected, the similar circuit in the body will also have power. If the chassis clearance lamps are activated, the body clearance lamps will also be activated.

Auxiliary Power in Battery Circuit

The auxiliary power circuit is a 10 ampere capacity circuit connected, with a 10 ampere fuse, directly to the battery. Use this circuit whenever you need power for auxiliary equipment. There is continuous power to this circuit (when the batteries are charged) even when the engine is off.

For example, if the van body has interior lights or floodlights, these can be wired to the auxiliary power circuit and switched ON from inside the van.

Connecting Battery Circuits

Battery circuits are tagged as follows:

Auxiliary Power (optional w/o TRLR connections)

The auxiliary power circuit wire is tagged AUX PWR and is blue.

Brake Lamp

The brake lamp wire is tagged STOP LP and is red.

Tail Lamp

The tail lamp wire is tagged TAIL LP and is brown.

Clearance Lamps

The clearance lamp wire is tagged CLEARANCE LP and is black.

INSTALLING A THIRD BATTERY

A third battery is a published option and can be ordered with your vehicle. If this was not done, use Figure 6–4 as a guide for installing a third battery.

You will need the following additional parts to install the third battery:

TABLE 6-1. Third Battery Installation Parts

QTY.	ITEM	PART NUMBER
1	BATTERY GRP 31 W/ THREADED POSTS	K306–11–1
1	HOLDDOWN	K144–282
1	TRAY	K032–3424
1	JUMPER CABLE	K396–1010–008
1	JUMPER CABLE	K396–1020–008
2	NUTS	K169–111

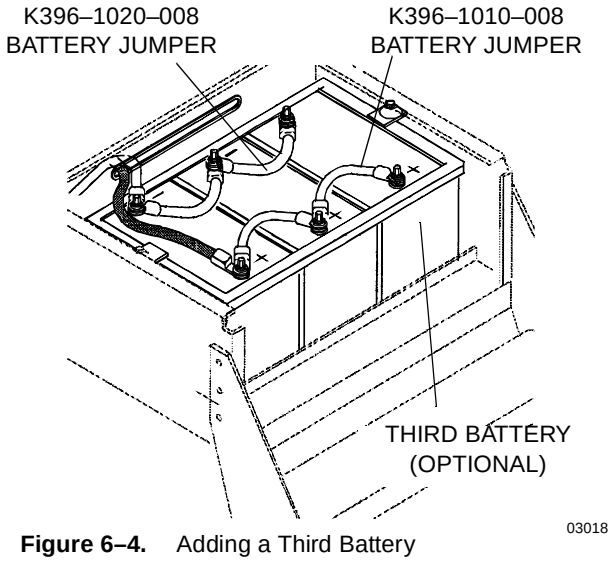

Figure 6–4. Adding a Third Battery

WIRING FOR A LIFTGATE

CAUTION: Consult the liftgate manufacturer's installation instructions for details concerning wiring for their product and specific model.

A liftgate will usually require current much greater than 10 amperes. Typically, 100 to 150 amperes is required and some models require more than 150 amperes. For a liftgate installation a third battery is required for adequate power.

NOTE: A liftgate installation must have a dedicated circuit to distribute power to the liftgate.

Liftgate Power Source

Liftgate motors will typically use DC power. A convenient power source is the battery. Use Figure 6–5 as a guide. Install the circuit breaker inside the battery box on the rear panel.

WARNING! DO NOT use a circuit breaker of lower capacity than the liftgate amperage requirements. If you do, it could result in an electrical overload or fire. Follow the liftgate installation instructions and use a circuit breaker with the recommended capacity.

A 200 ampere circuit breaker is available from PACCAR Parts. This should be adequate for most installations. However, the liftgate manufacturer's recommendation should determine the actual circuit breaker used.

200 Ampere Circuit Breaker Part Number:
7855–7–200

Connecting the Liftgate Power

Follow these instructions to connect the liftgate to the third battery. See Figure 6–5.

a. Connect the liftgate power cable to one terminal of the circuit breaker.

b. Connect one end of the circuit breaker cable to the other terminal of the circuit breaker.

c. Install the third battery.

d. Connect the remaining end of the circuit breaker cable to the positive terminal of the third battery.

The cable used to connect the circuit breaker to the battery is available from PACCAR Parts.

Circuit Breaker Cable Part Number:
K396–1C91F014

The remainder of the wiring installation should be in accordance with the liftgate manufacturer's installation instructions.

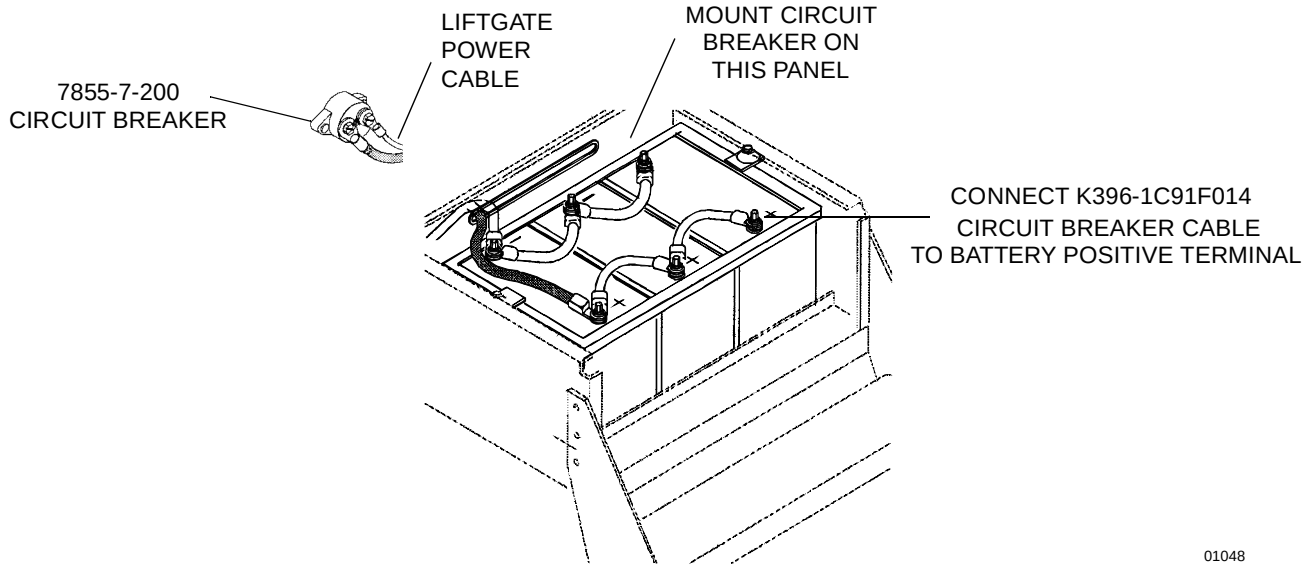

Figure 6–5. Liftgate Circuit Breaker Inside Battery Box.

KENWORTH
A DIVISION OF PACCAR

BODY BUILDERS' MANUAL

APPENDICES

APPENDIX A VEHICLE IDENTIFICATION

VEHICLE IDENTIFICATION NUMBER A-1
VIN Location A-1
Chassis Number Locations A-1
CERTIFICATION LABELS A-1
Components and Weights Label A-1
Tire and Rim Data Label A-2
Incomplete Vehicle Certification Label A-2
Noise Emission Label A-2
Paint Identification Label A-2
COMPONENT IDENTIFICATION. A-2
Engine Identification A-2
Transmission Identification A-2
Front Axle Identification A-2
Rear Axle Identification A-3

APPENDIX B WEIGHT DISTRIBUTION

INTRODUCTION B-1
Abbreviations B-1
CALCULATIONS B-2
Weight Distribution without Body B-2
Weight Distribution with Body B-3
Chassis Weights. B-3
Option Weights. B-3
Rear Liftgate Example B-6
COMPLETE (LOADED) VEHICLE. B-7
Water Level Load B-7
Weight Distribution Analysis. B-7
Body Length B-8

APPENDIX A VEHICLE IDENTIFICATION

VEHICLE IDENTIFICATION NUMBER

A 17–character number (numeral and letter combination) forms the Vehicle Identification Number (VIN) and Chassis Number. It contains among other information, the model year (4), assembly plant (5), and vehicle serial number (6). See Figure 1–1.

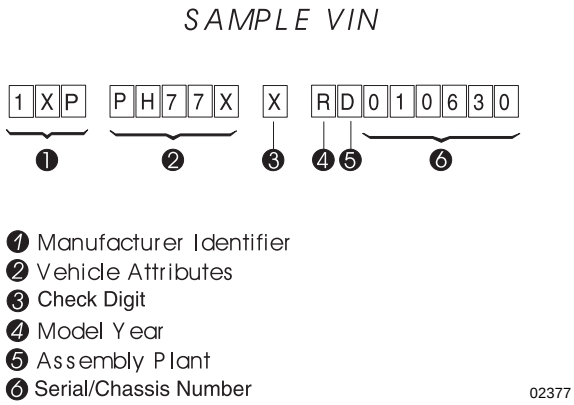

Figure 1–1. Vehicle Identification Number (VIN).

The model year (4) is designated by a letter code in the tenth character position in the VIN. See Table A-1 and Figure 1–1.

TABLE A-1. Model Year Letter (CODE) Designations.

CODE	YEAR
T	1996
V	1997
W	1998
X	1999
Y	2000

VIN Location

The VIN is marked on the Incomplete Vehicle Certification Label (on trucks) or on the Tire, Rim, Certification and Weight Rating Data Label (on tractors). Both labels are located either on the driver's door edge or door frame. See Figure 1–2.

Chassis Number Locations

The Chassis Number comprises the last six characters of the VIN.

The T300 chassis number is shown in six places:

- Right frame rail, top flange, about 3 ft. from the front end: stamped.
- Left side of cab, lower right corner of door frame: stamped plate.
- Tire, Rim, and Weight Rating Data label (truck).
- Components and Weights label.
- Noise Emission label.
- Paint Identification label.

CERTIFICATION LABELS

Components and Weights Label

The Major Components and Weights Label is located on either the driver's side door edge or on the door frame. See Figure 1–2. It includes: chassis weight and gross weight; plus, model and serial numbers for the vehicle, engine, transmission, and axles.

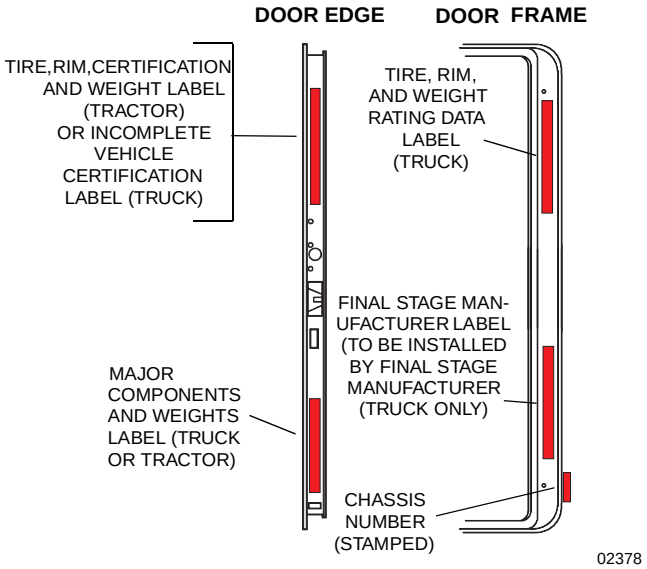

Figure 1–2. Driver's Door and Door Frame Labels

Tire/Rim and Weight Rating Data Label

The Tire/Rim and Weight Rating Data Label is located on the driver's side door edge, below the door latch. See Figure 1–2. It contains the following information:

- GVWR — Gross Vehicle Weight Rating
- GAWR FRONT and REAR — Gross Axle Weight Ratings for Front and Rear Axle
- TIRE/RIM SIZES AND INFLATION PRESSURES — Tire/Rim Sizes and Cold Pressure Minimums
- Chassis (Serial) Number

NOTE: GVWR is the TOTAL WEIGHT the vehicle is designed to carry. This includes the weight of the empty vehicle, loading platform, occupants, fuel, and any load. Axle weight ratings are listed on the edge of the driver's door.

Incomplete Vehicle Certification Label

The Incomplete Vehicle Certification Label (for trucks) is located on the driver's side door edge. See Figure 1–2. It contains the following information:

- DATE OF MANUFACTURE
- VIN — Vehicle Identification Number
- LISTING OF APPLICABLE FEDERAL MOTOR VEHICLE SAFETY STANDARDS

Noise Emission Label

The Noise Emission Label is located on the left side of the steering column support. It contains information regarding U.S. noise emission regulations, chassis number, and date of manufacture.

Paint Identification Label

The Paint Identification Label contains the paint colors used by the factory to paint your truck/tractor. It lists frame, wheels, cab interior and exterior colors. This label is located next to the Noise Emission Label on the steering column support.

COMPONENT IDENTIFICATION

Each of the following components has their own identification label.

Engine Identification

The engine serial number is stamped on a plate located on the either the left front side (for Cummins) or right rear of the engine, depending on engine model (Cummins or Caterpillar). For further information, please refer to the Engine Operation and Maintenance Manual (included in the glove compartment of each vehicle).

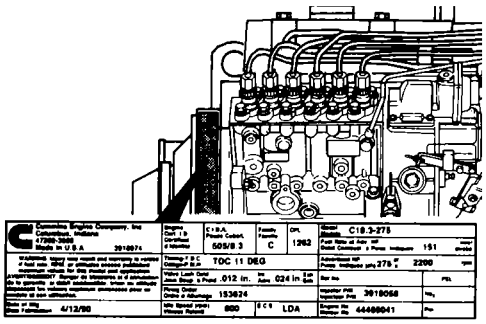

01054

Figure 1–3. Cummins Identification Plate.

Transmission Identification

The transmission identification number is stamped on a tag affixed to the right rear side of the transmission case. It includes among other specifications the transmission number, serial, and part number.

Front Axle Identification

The front axle serial number is stamped on a plate located on the front axle beam.

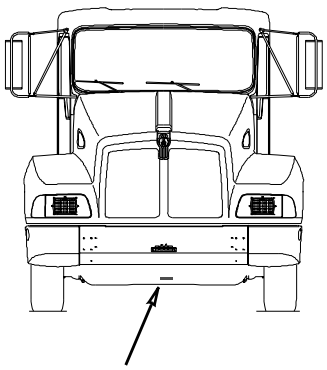

Figure 1–4. Front Axle Identification.

Rear Axle Identification

The rear axle identification numbering system includes three labels or stamps.

1. Axle Specification Number, stamped on the right rear side of the axle housing. This number identifies the complete axle.

2. Axle Housing Number Tag, located on the left forward side of the housing arm. This tag identifies the axle housing.

3. Axle Differential Carrier Identification, located on the top side of the differential carrier. The following information is either stamped, or marked with a metal tag: Model No., Production Assembly No., Serial No., Gear Ratio, and Part Number.

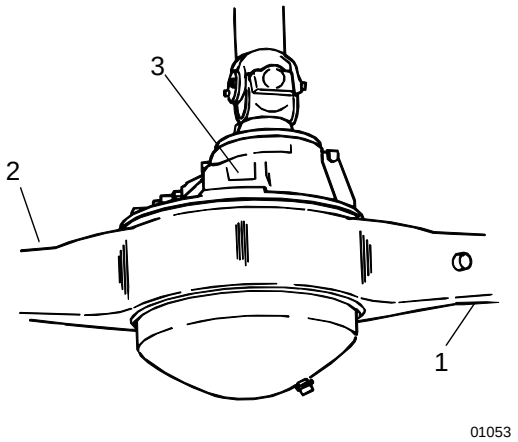

Figure 1–5. Rear Axle Identification Labels.

NOTE: Illustrated identification tag locations are typical. Actual locations may vary by axle manufacturer and with single versus tandem axles.

APPENDIX B WEIGHT DISTRIBUTION

INTRODUCTION

In the Medium Duty truck market, matching the wheelbase to the body specification is extremely important. Selection of the wrong wheelbase may lead to premature component failure, poor performance, and ultimately a dissatisfied customer. Before selecting the proper wheelbase, it is important to have a basic understanding of weight distribution.

Abbreviations

Throughout this section, abbreviations are used to describe certain features and requirements of the vehicle (see the list below). Review this list frequently so you know what the abbreviations mean.

AF = Frame rail overhang length – behind the rear axle

BL = Body Length

CA = Back of cab to centerline of rear axle

NOTE: The T300 CA figures are measured from the true back of cab to the centerline of the rear axle. To obtain a usable CA the body builder must subract any required space behind the cab, which may be needed for other equipment.

CG = Center of gravity: the balance point or center of a load. It is usually identified by a circle with alternating black and white quarters.

CGf = Distance from the centerline of the front axle to the center of gravity of the load (L). The load can be any load such as a fuel tank, a body, or the payload.

FA = Front Axle

GVW = Gross Vehicle Weight

L = Load: the weight that is carried. This could be the body, the payload or any item that has its weight distributed between the two axles.

Lf = Portion of load (L) carried by front axle

Lr = Portion of load (L) carried by rear axle

RA = Rear Axle

WB = Wheelbase Length

CALCULATIONS

Weight Distribution without Body

There are two primary equations used in weight distribution calculations:

- The first equation determines the portion of the load carried by the rear axle (Lr).

$$Lr = \frac{CGf}{WB} \times L$$

Portion of Load Carried by the Rear Axle **(EQ 1)**

- The second determines the portion of the load carried by the front axle (Lf).

$$Lf = L - Lr$$

Portion of Load Carried by the Front Axle **(EQ 2)**

NOTE: For the purposes of calculation, the load (L) in these equations can be either actual revenue producing load or it can be other weight that is carried such as the van body or an optional fuel tank.

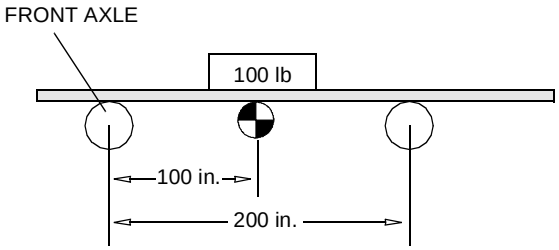

Figure 2–1. Balanced Load: CGf 100 in. from front axle.

Step 1. Figures 2–1 and 2–2 show a representation of a 200–inch (5080 mm) wheelbase (WB) truck designed to carry a 100–lb (45.3–kg) load. Figure 2–1 represents a truck with the load placed an equal distance between the two axles.

a. For our balanced load example we need to establish the center of gravity location (CGf, as shown in Figure 2–1) by dividing the wheelbase by 2:

$$CGf = \frac{200}{2} = 100 in (2540 mm)$$

b. Use equations 1 and 2 to determine the portions of the load carried by each axle.

- The weight distribution is calculated as illustrated below:

$$Lr = \frac{CGf}{WB} \times L \qquad \frac{100}{200} \times 100 = 50 lb (23 kg)$$

$$Lf = L - Lr \qquad 100 - 50 = 50 lb (23 kg)$$

- Since the load is centered between both axles, 50 percent of the load is carried by each axle: i.e., 50 lb (22.6 kg) is distributed to each axle.

c. In Figure 2–2, the load (L) is located 133 in. (3378 mm) from the front axle. Moving the load towards the rear axle changes the weight distribution. Use equations 1 and 2 to determine the portion of the load carried by each axle.

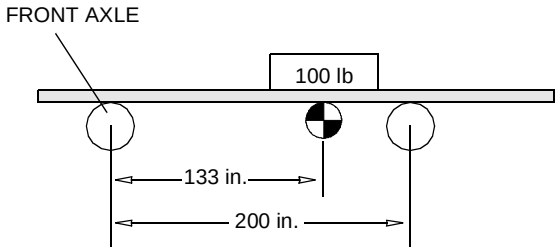

Figure 2–2. Unbalanced Load: CGf 133 in. from front axle.

CGf = 133 in. (3378 mm)

$$Lr = \frac{CGf}{WB} \times L \qquad \frac{133}{200} \times 100 = 66 lb (30 kg)$$

$$Lf = L - Lr \qquad 100 - 66 = 34 lb (15 kg)$$

- The rear axle now carries a greater proportion of the load than the front axle.

Although it is usually not important to know the CG of the chassis; it is important to know the CG location of truck bodies, accessories, or loads that may be placed on the chassis. This example shows that the location of the CG of an object relative to the front and rear axles (FA and RA) affects the load carried by each axle.

For most relatively uniform objects such as van bodies and fuel tanks, the CG is located close to the midpoint of the object. For non–uniform objects such as liftgates and refrigeration units, obtain the CG from the equipment manufacturer.

Weight Distribution with Body

Chassis Weights

Step 2. In the following example, a truck is modified to include a van body mounted to the chassis. This example is a T300 chassis, 200 inches (5080 mm) in WB, with a standard drivetrain and fuel tank. It is a 33000 lb. GVWR with a 12,000 lb. front axle and a 21,000 lb. rear axle. In addition, the chassis is equipped with an optional LH mount 50 gallon fuel tank.

When calculating weight distributions, start by determining chassis ground weights for each axle. The actual chassis weight will vary with the wheelbase and the options installed. Listed in Tables B-1 and B-2 are the chassis tare weights for the standard single rear axle and tandem rear axle T300 vehicles and each wheelbase configuration.

From Table B-1 we see that the 200-inch wheelbase, 2-axle T300 has the following tare weights:

FA = 6428

RA = 3616

Table B-3 lists several available options on the T300. It also lists their added weight when installed on the chassis and the location (from the front axle) of the CG of this added weight.

Option Weights

Step 3. Some chassis are ordered with an optional transmission, suspension, cab items, etc. Each optional component will have a portion of its total weight distributed to both the front and rear axles. **In all cases, you must calculate the load each option places on each axle.**

We need to determine how the weight of the optional 50 gallon fuel tank is distributed to each of the axles. From Table B-3 we find the option weight and its CG location relative to the front axle. The fuel tank adds 125 lbs (57 kg) and is located 93.5 inches (2375 mm) from the front axle.

With CGf = 93.5, use equations 1 and 2 to calculate the distributed additional weight of the optional 50 gallon fuel tank. Add your results to the “bare” chassis axle weights from Table B-1 or Table B-2.

$$Lr = \frac{CGf}{WB} \times L \qquad \frac{93.5}{200} \times 125 = 58\text{lb}(26\text{kg})$$

$$Lf = L - Lr \qquad 125 - 58 = 67\text{lb}(30\text{kg})$$

TABLE B-1. T300 Single Rear Axle “Bare” Chassis Tare Weights (no driver, no fuel), lb (kg).

WHEELBASE INCHES	FRONT	REAR	TOTAL
TRUCKS			
145	6,144 (2790)	3,564 (1618)	9,708 (4407)
150	6,178 (2805)	3,540 (1607)	9,718 (4412)
160	6,222 (2825)	3,577 (1624)	9,799 (4449)
185	6,352 (2884)	3,559 (1616)	9,911 (4500)
200	6,428 (2919)	3,616 (1641)	10,044 (4560)
215	6,492 (2947)	3,726 (1692)	10,218 (4639)
230	6,549 (2973)	3,772 (1712)	10,321 (4686)
245	6,607 (2999)	3,805 (1728)	10,412 (4727)
260	6,673 (3030)	3,876 (1760)	10,549 (4789)
280	6,760 (3069)	3,928 (1783)	10,688 (4852)
TRACTORS			
150	6,182 (2807)	3,930 (1784)	10,112 (4591)
160	6,233 (2830)	4,028 (1829)	10,261 (4658)

i

NOTE: The weights in Table B-1 represent a standard chassis (built to standard specifications). Weights do not include any options. The tractor weights include a fixed fifth wheel for the 150 inch wheelbase and a sliding fifth wheel for the 160 inch wheelbase. For tandem rear axle chassis weights, see next page.

TABLE B-2. T300 Tandem Rear Axle "Bare" Chassis Tare Weights (no driver, no fuel), lb (kg).

WHEELBASE INCHES	FRONT	REAR	TOTAL
TRUCKS			
175	6,258 (2841)	6,327 (2872)	12,585 (5714)
190	6,326 (2872)	6,377 (2895)	12,703 (5767)
205	6,375 (2894)	6,399 (2905)	12,774 (5799)
220	6,425 (2917)	6,523 (2962)	12,948 (5878)
235	6,473 (2939)	6,550 (2974)	13,023 (5912)
250	6,526 (2963)	6,619 (3005)	13,145 (5968)
260	6,541 (2970)	6,674 (3030)	13,215 (6000)
TRACTORS			
165	6,224 (2826)	6,291 (2856)	12,515 (5682)

NOTE: The weights in Table B-2 represent a standard chassis (built to standard specifications). Weights do not include any options. The tractor weights include a sliding fifth wheel.

NOTE: The options listed in Table B-3 do not include all that are available. This list is included only to give a representation of option weights. For a complete current list or to obtain the weight of a particular option, consult a T300 data book at your nearest Kenworth dealer.

TABLE B-3. T300 Options

Description	Weight	Location (CGf)
ENGINES		
Cummins ISB	-459	5.1
CAT 3126	-71	4.4
ENGINE EQUIPMENT		
Horton fan hub	15	-30
Horiz. muffler, vert. pipe	42	69
58 inch vert. tail pipe	7	69
Racor fuel/water separator	15	16.2
KBI ether injection	5	0
Block heater	3	0
Kysor duel system shutdown	5	0
Jacobs extarder	15	7.4
Third battery	55	48.7
TRANSMISSIONS		
Fuller FS5306	-3	40.9
Fuller FS8206	55	43.5
Fuller RT8608L	253	37.2
Fuller RT8709	245	43.1
Allison MD series	273	35.4
Spicer SOLO clutch (B5.9)	-30	22
FRONT AXLE EQUIPMENT		
Centrifuse drums	-20	0
20 inch 6-spoke wheels	92	0
REAR AXLES-Single		
21060D wheel diff lock	15	wb
21060T two-speed	75	wb
23080S 23K	136	wb
23080D 23K wheel diff lock	160	wb
23080T 23K two-speed	208	wb
23105 23K	246	wb
23105D 23K wheel diff lock	270	wb

Description	Weight	Location (CGf)
REAR AXLES-Tandem		
DS404	2162	wb
DS405	2200	wb
REAR AXLE EQUIPMENT (Single)		
Dust shields	8	wb
Centrifuse drums	-34	wb
20 inch 6-spoke wheels	128	wb
(Tandem)		
Dust shields	18	wb
Centrifuse drums	-68	wb
20 inch 6-spoke wheels	256	wb
Wheel diff lock DS404(5) rr rr axle	15	wb
Wheel diff lock DS404(5) fwd rr and rr rr axle	38	wb
SUSPENSIONS (Single)		
HAS210L	-121	wb
Reyco 79KB with aux spring 23K	58	wb
HAS230L	-105	wb
Shocks for Reyco 79KB	36	wb
(Tandem)		
Reyco 102	254	wb
HAS402	468	wb
RT2-400	492	wb
TIRES (weight per pair)		
Bridgestone R250F 11R22.5	4	
Bridgestone M711 295/75R22.5	0	
Bridgestone M711 11R22.5	1	
Goodyear G159A 295/75R22.5	-10	
Goodyear G159A 11R22.5	0	
Goodyear G124 295/75R22.5	-16	
Goodyear G124 11R22.5	6	

TABLE B-3. T300 Options (continued)

Description	Weight	Location (CGf)
Michelin PXZA2 275/80R22.5	-18	
TIRES (weight per pair) (continued)		
Michelin PXZU4 275/80R22.5	-12	
Michelin XZA2 11R22.5	-6	
Michelin PXDHT 275/80R22.5	6	
Michelin XDHT 11R22.5	14	
WHEELS & RIMS (weight per pair)		
30371NE 22.5x7.5 rim	-36	
88362 Alcoa Hub pilot	-66	
88311 Alcoa Ball seat	-54	
88460 Aloca Hub pilot stylized	-62	
FRAME AND EQUIPMENT		
Frame access grabhandle	1	60
1' deck plate	6	92
2' deck plate	10	98
3' deck plate	15	104
Frame access steps	16	104
FW8-7803XL fixed 5th wheel	427	wb
FW8-8002T3L slide 5th wheel	541	wb
Tractor taper end of frame	-7	wb+AF
(Single axle)		
Rear mudflaps	20	wb+40
Quarter fenders	45	wb-25
(Tandem)		
Rear mudflaps	20	wb+55
Quarter fenders	45	wb-50
FUEL TANKS & EQUIPMENT		
(fuel)	7 lb/gal	Fuel tank
50 gal rect steel LH behind cab	125	93.5
70 gal rect steel LH behind	140	99
56 gal 22" Al RH under	-19	51
70 gal 22" Al RH under	-11	57
100 gal 22" Al RH under	0	64
120 gal 22" Al RH under	8	70
56 gal 22" Al LH behind	92	95
75 gal 22" Al LH behind	100	101
100 gal 22" Al LH behind	111	108
CAB & EQUIPMENT		
Heater/air conditioner	69	-6
Driver's high-back Air cushion Plus	2	42
Driver's single armrest	3	42
Driver's dual armrest	6	42
Rider's high-back tool box seat	2	42
Air cushion Plus	33	42
Rider's high-back Air cushion Plus	33	42
2-man passenger seat	24	42
Rider's single armrest	3	42
Rider's dual armrest	6	42
Single 22" air horn	5	39
Dual 22" air horn	10	39
8 1/2" mirror brackets	2	16
Radio	5	16
Peeper window	6	20
Sunvisor with lights	9	16

Description	Weight	Location (CGf)
Driver	200	51
LIGHTS & SIGNALS		
Back up alarm	4	wb
AIR EQUIPMENT		
AD-9 air dryer	31	68
AD-SP air dryer	14	68
AIR & ELECTRICAL SUPPLY KITS		
Tractor kit	25	83
Full truck kit	15	wb

Now we will calculate the distributed weight of a 14 foot van body that weights 2400 pounds (1089 kg). Since an empty van is very close to a uniform object, you can assume that the CG of the van body is at a point equal to half of the BL.

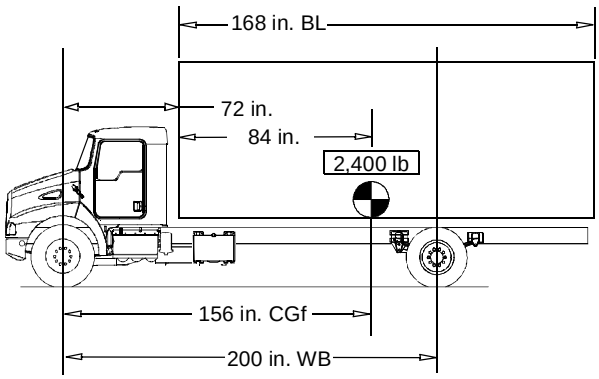

Figure 2–3. Balanced Body Unloaded: CGf 156 in. (3962 mm) from front axle.

When the body is mounted on the chassis, assume that the forward edge is positioned 4 inches (102 mm) behind the back of the cab. This is equivalent to 72 inches (1829 mm) behind the front axle. Therefore, the CG of the body is located 72 inches plus half the body length from the front axle.

$$CGf = \frac{1}{2}BL + 72 \quad \Big| \quad \frac{1}{2}(168) + 72 = 156in$$

Use Equations 1 and 2 to calculate the distributed additional weight of the body:

$$Lr = \frac{CGf}{WB} \times L \quad \Big| \quad \frac{156}{200} \times 2,400 = 1872lb(849kg)$$

$$Lf = L - Lr \quad \Big| \quad 2,400 - 1,872 = 528\,lb\,(240\,kg)$$

Adding a liftgate to the van body will present some interesting weight distribution results. We will add a 1000 pound (454 kg) liftgate to the end of the van body. The Cg location of non-uniform objects, such as a liftgate, must be provided by the equipment manufacturer. For our example, the liftgate manufacturer has provided installation information that indicates the liftgate CGf is located 246 in (6248 mm) behind the front axle.

Rear Liftgate Example

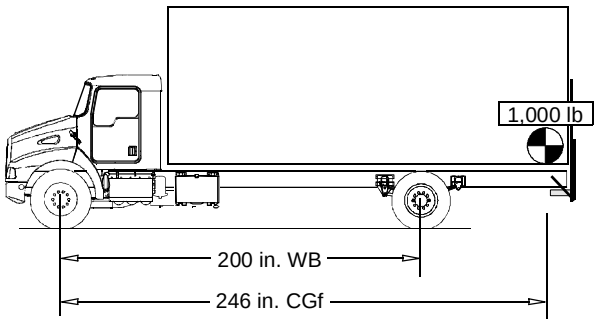

Figure 2–4. Liftgate Example: CGf 246 in. (6248 mm) from front axle.

Use CGf = 246 in equations 1 and 2 to determine how the liftgate weight is distributed to the axles.

$$Lr = \frac{CGf}{WB} \times L \quad \Big| \quad \frac{246}{200} \times 1,000 = 1,230\,lb\,(558\,kg)$$

$$Lf = L - Lr \quad \Big| \quad 1,000 - 1,230 = -230\,lb\,(-104\,kg)$$

This negative weight on the front axle illustrates the difference between the distribution of weight (L) mounted behind the rear axle versus in front of the rear axle.

- The load carried by the rear axle is greater than the weight of the liftgate itself. Since the weight of the liftgate (added to the vehicle) cannot be greater than 1,000 lb, the front axle loading is reduced by a compensating amount (230 lb). The combined weight on the front and rear axles is equal to that of the liftgate.
- Weight added behind the rear axle has the effect of unloading the front axle. The amount of this front axle load reduction is equal to the “extra” weight added to the rear axle.
- By positioning equipment behind the rear axle, the effective load on the rear axle is more than the weight of the equipment.
- The farther behind the rear axle the load is mounted, the greater the load on the rear axle. However, the combined weight, distributed to the front and rear axles (Lf plus Lr), does not exceed the weight of the liftgate.

In order to get a realistic curb weight, we add weight for a driver and fuel. For purposes of calculation, we use a standard of 200 lb. (91 kg) for the driver. Of course, your driver weight will vary. Using CGf = 51 in equations 1 and 2:

$$Lr = \frac{CGf}{WB} \times L \quad \Big| \quad \frac{51}{200} \times 200 = 51\,lb\,(23\,kg)$$

$$Lf = L - Lr \quad \Big| \quad 200 - 51 = 149\,lb\,(68\,kg)$$

We calculate the fuel load using 7 lb per gallon as the weight for diesel fuel.

50 gal x (7 lb/gal) = 350 lb (159 kg) for each tank

Using CGf=51 and equations 1 and 2 for the standard tank RH Under Cab:

$$Lr = \frac{CGf}{WB} \times L \quad \Big| \quad \frac{51}{200} \times 350 = 89\,lb\,(40\,kg)$$

$$Lf = L - Lr \quad \Big| \quad 350 - 89 = 261\,lb\,(118\,kg)$$

Using CGf=93.5 and equations 1 and 2 for the optional tank LH Behind Cab:

$$Lr = \frac{CGf}{WB} \times L \quad \Big| \quad \frac{93.5}{200} \times 350 = 164\,lb\,(74\,kg)$$

$$Lf = L - Lr \quad \Big| \quad 350 - 164 = 186\,lb\,(84\,kg)$$

COMPLETE (LOADED) VEHICLE

Water Level Load

Step 4. The final step is to put a payload in the van. Assume that the payload is evenly distributed. Freight that is distributed evenly is referred to as a "water level" load. Our payload total is 16,000 lb. Since it is an evenly distributed "water level" load, its CG location will be the same as the CG location of the van body. See Figure 2–5.

$$CGf = \frac{1}{2}BL + 72 \quad \Big| \quad \frac{1}{2}(168) + 72 = 156\text{in}$$

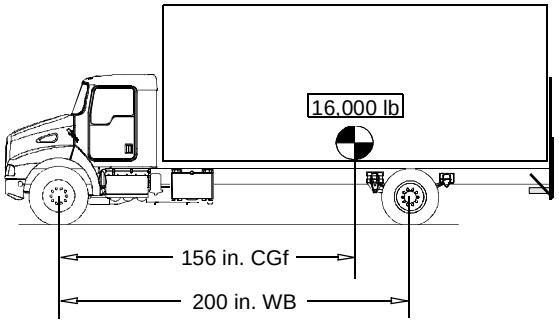

Figure 2–5. Loaded Vehicle Example: CGf 156 in. (3962 mm) from front axle.

Using CGf = 156 in equations 1 and 2:

$$Lr = \frac{CGf}{WB} \times L \quad \Big| \quad \frac{156}{200} \times 16,000 = 12,480 \text{ lb } (5661\text{kg})$$

$$Lf = L - Lr \quad \Big| \quad 16,000 - 12,480 = 3,520 \text{ lb } (1597\text{kg})$$

TABLE B-4. T300 Weight distribution and chassis rating calculation (sample)

ITEM	FRONT AXLE (FA) lb (kg)		REAR AXLE (RA) lb (kg)		TOTAL lb (kg)	
Chassis	6428	2916	3616	1640	10044	4556
Option fuel tank	67	30	58	26	125	57
Tare Weight	6495	2946	3674	1666	10169	4613
Van Body	528	240	1872	849	2400	1089
Liftgate	-230	-104	1230	558	1000	454
Driver	149	68	51	23	200	91
Fuel (50 gal) Std Tank	261	118	89	40	350	159
Fuel (50 gal) Opt Tank	186	84	164	74	350	159
Curb Weight	7389	3352	7080	3211	14469	6563
Payload	3520	1597	12480	5661	16000	7257
Total Ground Load	10908	4948	19560	8872	30469	13821
Chassis Axle Ratings	12000	5443	21000	9525	33000	14969

Weight Distribution Analysis

Step 5. The final step is to total all the front and rear axle weights to ensure that the axles are not overloaded. Table B-4 shows the assembled information in an easy to read format.

a. Compare the calculated axle ground totals against the axle weight ratings to be sure that the truck is properly specified to haul this load.

- From this, it is evident that the chassis is properly equipped for this job.

These calculations illustrate the importance of doing the weight distribution analysis. In some cases the addition of one component (for example, a liftgate) can produce a dramatic difference.

Body Length

Step 6. Your analysis may produce results that indicate an overloaded axle with a total loaded chassis weight less than the GVW. This shows that you need to use a different body length for the truck. Each wheelbase can accommodate several different body lengths. However, for each wheelbase and GVW one particular body length will provide close to optimum weight distribution on both axles.

a. Tables B-5 and B-6 list Recommended Body Lengths for a particular wheelbase and GVW. These body lengths provide the best weight distribution for the listed wheelbase.

NOTE: These charts were generated assuming a plain van body with "water level" loading. Any common additions such as lift gates or refrigeration units may indicate a different wheelbase for a given body length. Also, different body styles may require a different WB for a given size

TABLE B-5. Recommended T300 Body Lengths (Single Rear Axle).

WHEELBASE IN. (MM)	BODY LENGTH (FT)	
	30,000 GVW	33,000 GVW
145 (3683)	8	8
150 (3810)	10	10
160 (4064)	12	12
185 (4699)	14	14
200 (5080)	16	14
215 (5461)	18	16
230 (5842)	20	18
245 (6223)	22	20
260 (6604)	24	22
280 (7112)	26	24

- Remember that water level loading assumes that the load is arranged evenly in the body (as water would be in a tank). If uneven load distribution is part of the vehicle layout, your weight distribution analysis may indicate that a different body length, deviating from the recommended length, will provide the best weight distribution.

NOTE: You should always perform a weight distribution analysis to help ensure the vehicle performs properly and meets your customer's expectations.

TABLE B-6. Recommended T300 Body Lengths (Tandem Rear Axle).

WHEELBASE IN. (MM)	BODY LENGTH (FT)
175 (4445)	14
190 (4826)	16
205 (5207)	18
220 (5588)	20
235 (5969)	22
250 (6350)	24
260 (6604)	26

INDEX

A
abbreviations, dimensions 3-1
auxiliary power 6-4

B
body harness 6-1
body mount, rear 4-5
body mounting 4-1
body mounting with U-bolts 4-4
brackets, mounting 4-2

C
calculations B-2
cautions 2-1
certification label 2-2
chassis maintenance 1-1
Chassis Number A-1
chassis weight B-3
circuits, description 6-4
clearance, air lines and wiring 4-5
critical clearances 4-1
crossmember location 3-8
crossmembers 5-4

D
dimensions 3-1
dimensions, air tanks 3-10
dimensions, battery box 3-10
dimensions, exhaust, horizontal 3-11
dimensions, exhaust, vertical 3-12
dimensions, frame rails 3-10
dimensions, fuel tank 3-11
dimensions, optional fuel tank 3-11
dimensions, overall 3-2

E
Electrical circuits 6-1
electrical circuits 6-1
engine serial number A-2

F
Federal Motor Vehicle Safety Standards 2-1
final stage manufacturer 2-2
fishplate bracket 4-5
FMVSS 2-1
frame, changing length 5-1
frame, drilling 4-4
frame, welding 5-4
front axle serial number A-2
Front View 3-4
fuel tank locations 3-9

G
ground clearance 3-4

I
incomplete vehicle certification 2-2
Incomplete Vehicle Certification Label A-2

L
liftgate 6-5

M
mounting holes, frame 4-3

N
Noise Emission Label A-2
notes 2-1

O
operating information 1-1
options weights B-4

R
rear axle identification A-3
rear suspension, changing 5-3
repair information 1-1

S
safety signals 2-1
scope 1-1
sill spacer 4-3
Step height 3-6

T
third battery option 6-5
Tire And Rim Data Label A-2
transmission identification A-2
turning radius 3-1

V
Vehicle Identification Number A-1

W
warnings 2-1
water level load B-7
weight distribution B-1
weight distribution analysis B-7
wheelbase, changing 5-2
width with doors open 3-8

Kenworth Truck Company
P.O. Box 1000
Kirkland, Washington 98083
A DIVISION OF PACCAR Inc

KW4130 was CAT. NO. 7540 (6/99)