https://truckmanualshub.com/

CLAAS

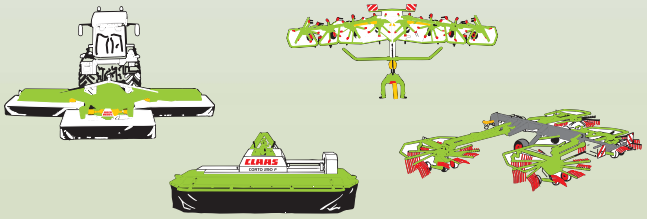

**DISCO 8500C** (Tractor)
**DISCO 8500C-6, -8** (JAGUAR)
(until serial no.: 652 01278)

**DISCO, CORTO, VOLTO, LINER**

# Technical Systems

SERVICE & PARTS

https://truckmanualshub.com/

https://truckmanualshub.com/


**Chapter**

**1 JAGUAR 8500 C,**
**JAGUAR 8500 C- 6,**
**JAGUAR 8500 C- 8**

**2 DISCO 8500 C**

**3 CORTO 8100 F/T**

**4 LINER 3000,**
**LINER 1550 TWIN,**
**LINER 650 TWIN**

**5 VOLTO 1050,**
**VOLTO 870H**

**6 DISCO 3000TC, TRC, AS, FG**
**CORTO 3100, 300, 252, 250**

https://truckmanualshub.com/

https://truckmanualshub.com/


**1.0 Hydraulic System....2**

1.1 JAGUAR 8500C-6, C-8 hydraulic circuit diagram....2
1.2 Function....8

**2.0 Electric system JAGUAR 8500C, CISCO 8500C-6, -8....14**

2.1 Electric circuit diagram....14
2.2 Function....16
2.3 Central terminal compartment....20

**3.0 Installation information....24**

3.1 Timing of drives....24
3.2 Installation of pinion units....25
3.3 Safety module....26
3.4 Tightening torques....27

**4.0 Drive diagram....28**

Attention

The description of the Jaguar 8500C also applies to
- Disco 8500C-6
- Disco 8500C-8

The only exception is: The Reed switch (75) does not exist on the Disco 8599C-6.

https://truckmanualshub.com/


# 1.0 Hydraulic System

## 1.1 JAGUAR 8500C-6, C-8 hydraulic circuit diagram

| | |
|---|---|
| 2 | Lift hydraulics pump, 12 cm³/rev. |
| 5 | Oil filter, lift hydraulics, mesh size 0.06 mm |
| 9 | Pressure relief valve with 4/3 way valve, square tube adjustment |
| 10 | Pressure gauge connection, lift hydraulics |
| 50 | 4/3 way solenoid valve, double-acting, for front attachments (series equ.) |
| 51 | 3/3 way solenoid valve, lift front attachment |
| 70 | 2/2 way solenoid valve, fold out right and left mower unit |
| 71 | 2/2 way solenoid valve, fold in right and left Disco |
| 72 | 2/2 way solenoid valve, raise/lower centre mower unit |
| 73 | 2/2 way solenoid valve, raise/lower left mower unit |
| 74 | 2/2 way solenoid valve, raise/lower right mower unit |
| 75 | Reed switch (mounted on 3/3 way solenoid valve item 51 = only on Jaguar 800 series) |
| 81 | Non-return valve, left mower unit |
| 82 | Hydraulic cylinder, left mower unit, starting protection |
| 83 | Pressure relief valve 180 bar |
| 84 | Non-return valve, right mower unit |
| 85 | Hydraulic cylinder, right mower unit, starting protection |
| 86 | Pressure relief valve 180 bar, right mower unit |
| 87 | Pressure gauge, right mower unit ground pressure |
| 88 | Right mower unit accumulator, charge pressure 35 bar, 0.75 litres |
| 89 | Right mower unit lock-up valve unit (2/2 way solenoid valve, closed when deenergized) |
| 90 | Right mower unit raise/lower hydraulic cylinder |
| 91 | Left mower unit fold in/out hydraulic cylinder |
| 92 | Right mower unit fold in/out hydraulic cylinder |
| 93 | Oil pressure switch 150 bar (normally open contact) |
| 94 | Oil pressure switch 85 bar (normally open contact) |
| 95 | Oil pressure switch 150 bar (normally open contact) |
| 96 | 2 oil pressure switches 140 bar (normally closed contact) |
| 97 | Pressure gauge, left mower unit ground pressure |
| 98 | Left mower unit accumulator, charge pressure 35 bar, 0.75 litres |
| 99 | Left mower unit lock-up valve unit (2/2 way solenoid valve, closed when deenergized) |
| 100 | Hydraulic cylinder, left mower unit |
| 101 | Pressure gauge, centre mower unit ground pressure |
| 102 | Centre mower unit accumulator, charge pressure 35 bar, 0.75 litres |
| 103 | Centre mower unit raise/lower hydraulic cylinder |
| 104 | Pressure relief valve 180 bar (Jaguar 800 series on the left of the front attachments cylinder, Jaguar 600 series on the right of the front attachments cylinder) |
| 106 | Line to the front attachment cylinders |
| 107 | Non-return valve |
| 108 | Orifice plate Ø 1.2 mm |
| 109 | Centre (front) mower unit lock-up valve unit (2/2 way solenoid valve, closed when deenergized) |
| 110 | Double acting front attachment cylinder, for 8500C, 8500C-6, -8 |
| 111 | Shut-off tap |
| 112 | Screwed coupling |

https://truckmanualshub.com/


**JAGUAR 8500 C-6 / C-8 hydraulic circuit diagram**

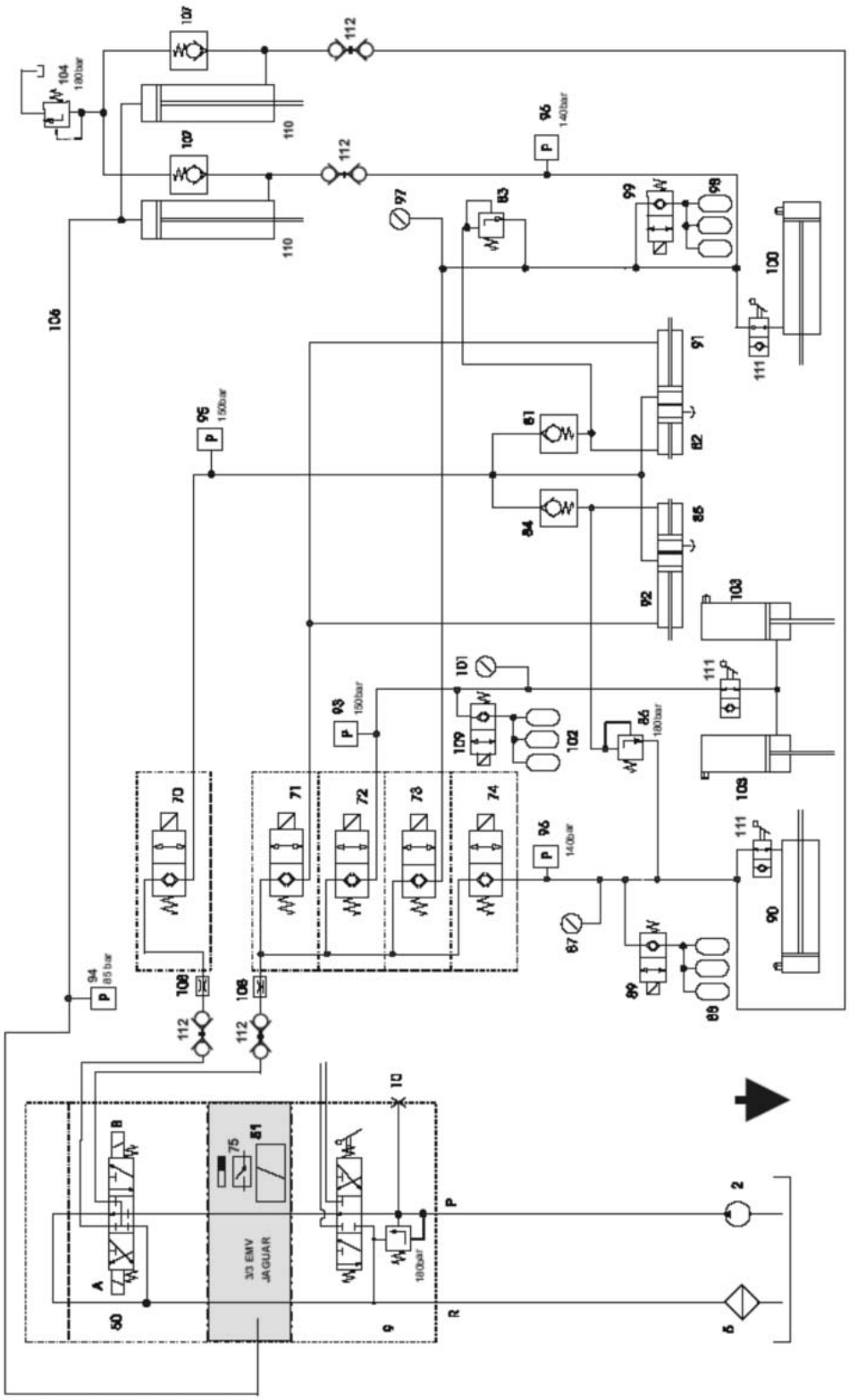


Dcvl 001

https://truckmanualshub.com/


**Directional control valves subassembly**
Jaguar 800 series, left side

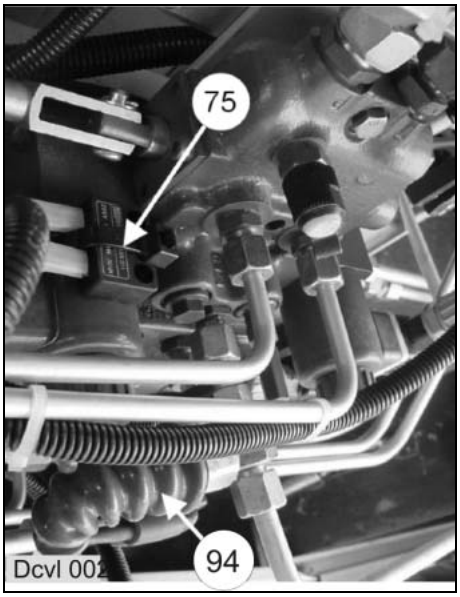


75 Reed switch
94 Oil pressure switch 85 bar

**Attention** The lettering on the Reed switch (75) must face the lift magnet of the 3/3 way solenoid valve = safe switching (the Reed switch in the picture is not properly mounted).

**Directional control valves, oil pressure switches and pressure relief valves**
(under the cover)

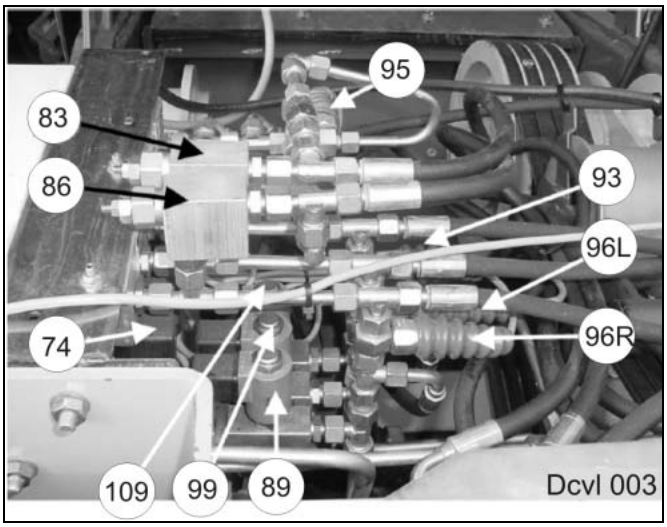


74 2/2 way solenoid valve, raise/lower right mower unit
Next to this: the other Bucher directional control valves 73, 72, 71 and 70.
83 Pressure relief valve 180 bar (left mower unit)
86 Pressure relief valve 180 bar (left mower unit)
89 Right mower unit lock-up valve unit
(2/2 way solenoid valve, closed when deenergized)
93 Oil pressure switch 150 bar (normally open contact), front mower unit
96L Oil pressure switch 140 bar (normally closed contact), left mower unit
96R Oil pressure switch 140 bar (normally closed contact), right mower unit
95 Oil pressure switch 150 bar (normally open contact), fold out mower units
99 Left mower unit lock-up valve unit
(2/2 way solenoid valve, closed when deenergized)
109 Front mower unit lock-up valve unit
(2/2 way solenoid valve, closed when deenergized)

https://truckmanualshub.com/


**Pressure gauge for ground pressure**

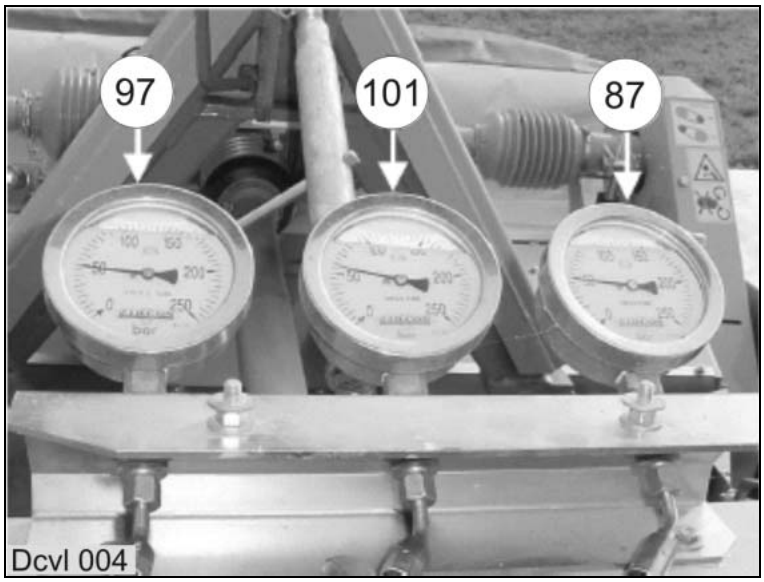


87 Pressure gauge, right mower unit ground pressure
97 Pressure gauge, left mower unit ground pressure
101 Pressure gauge, centre mower unit ground pressure

All pressure gauges show a ground pressure of 50 bar with the mower units lowered (working position).

**Bucher 2/2 way valves**
(under the cover)

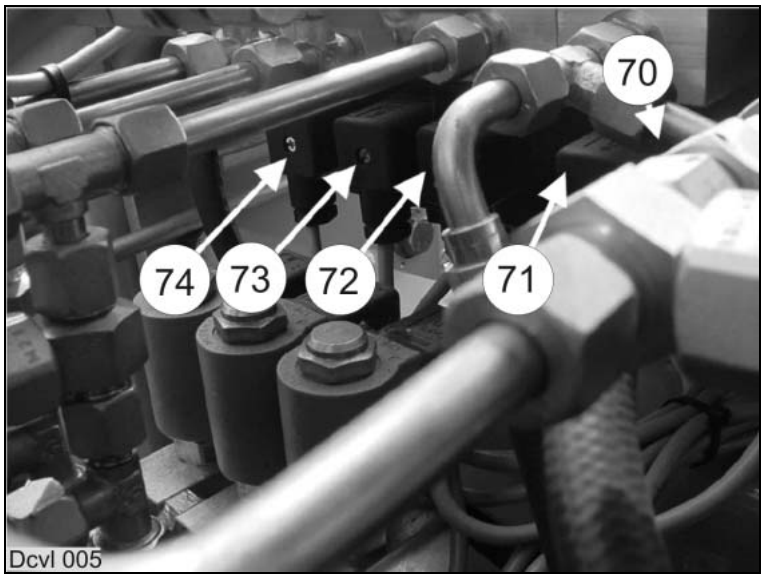


70 2/2 way solenoid valve, fold out right and left mower unit
71 2/2 way solenoid valve, fold in right and left mower unit
72 2/2 way solenoid valve, raise/lower centre mower unit
73 2/2 way solenoid valve, Disco left load relief
74 2/2 way solenoid valve, Disco right load relief

https://truckmanualshub.com/


**Jaguar front attachment cylinder pressure relief valve**

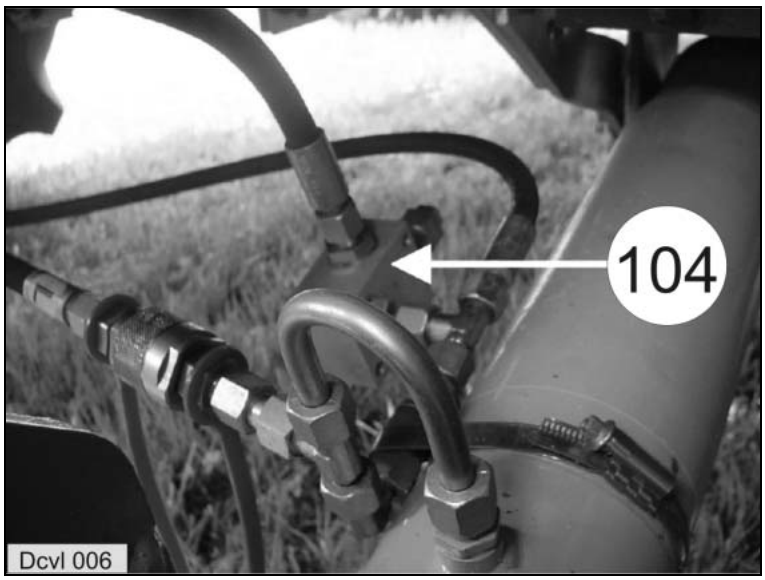


104 Pressure relief valve 180 bar

Jaguar 800 series on the left of the front attachments cylinder,
Jaguar 600 series on the right of the front attachments cylinder

**Accumulator**
behind the right-hand cover

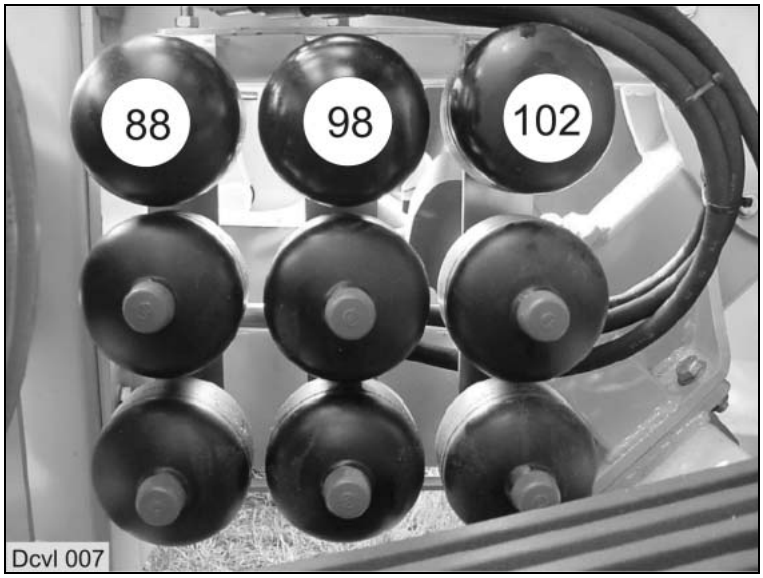


88 3 x right mower unit accumulator, charge pressure 35 bar, 0.75 litres
98 3 x left mower unit accumulator, charge pressure 35 bar, 0.75 litres
102 3 x centre mower unit accumulator, charge pressure 35 bar, 0.75 litres

https://truckmanualshub.com/

https://truckmanualshub.com/


## 1.2 Function

1.2.1 Actuate from transport to working position

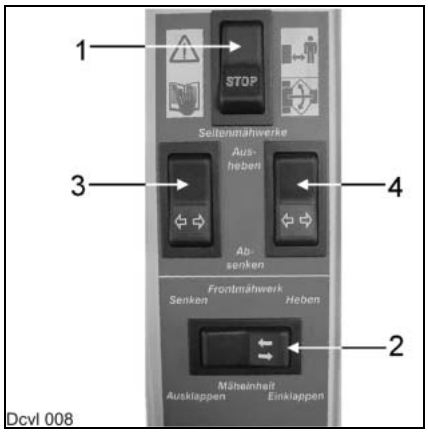


**Caution:** 1 = Main switch ON-OFF. Set to OFF when parking the machine.

| Step | Action | Reaction |
|---|---|---|
| 1 | Switch 2 on the CCT is actuated to the right | Solenoid valve 50 goes to position B.<br>Volume flow goes to the solenoid valves 71, 72, 73 and 74. |
| 2 | Solenoid valve 72 is triggered | The applied volume flow goes to cylinder 103.<br>The front mower unit is raised to its end position = the pressure rises and oil pressure switch 93 switches at 150 bar. |
| 3 | Solenoid valves 70 and 71 are triggered. | Volume flow goes to the rod spaces of cylinder 91 and 92 via the solenoid valve 71. |
| 4 | The displaced volume flow from the ram top space flows to the tank via the energized solenoid valve 70. | The side-mounted mower unit are folded in.<br>The lock can be released. |
| 5 | Switch 2 on the CCT is actuated to the left | Solenoid valve 50 goes to position A.<br>Solenoid valves 70 and 71 are triggered. This makes volume flow flow through solenoid valves 70:<br>into cylinders 82 and 85 (but also the non-return valves 81 and 84).<br>into cylinders 91 and 92. The side-mounted mower units are now folded out and the starting protections are activated. |
| 6 | Cylinders travel against their end stop | Pressure switch 95 switches at a pressure of 150 bar. |
| 7 | Solenoid valve 72 is triggered | Volume flow from cylinders 103 flows through 72 and solenoid valve 50 (position A) into the tank. The front mower unit is lowered. |
| 8 | The lower command for the left mower unit is issued on the control terminal (switch 3). | Solenoid valve 50 goes to position A.<br>Solenoid valve 73 is energized. |
| 9 | Volume flow from cylinder 100 flows into the tank. | The left mower unit is lowered. |
| 10 | The lower command for the right mower unit is issued on the control terminal (switch 4). | Solenoid valve 50 goes to position A.<br>Solenoid valve 74 is energized. |
| 11 | Volume flow from cylinder 90 flows into the tank. | The right mower unit is lowered. |

During work, the working pressures of all cylinders are supported by the accumulators 88, 98 and 102. The lock-up valve units are opened at switch 94 below 80 bar. When the pressure rises to above 85 bar, the lock-up valve units are closed and the mower units remain in their position. The ground pressure of the mower units can be seen on pressure gauges 87, 97 and 101.

https://truckmanualshub.com/


JAGUAR 8500 C-6 / C8 hydraulic circuit diagram

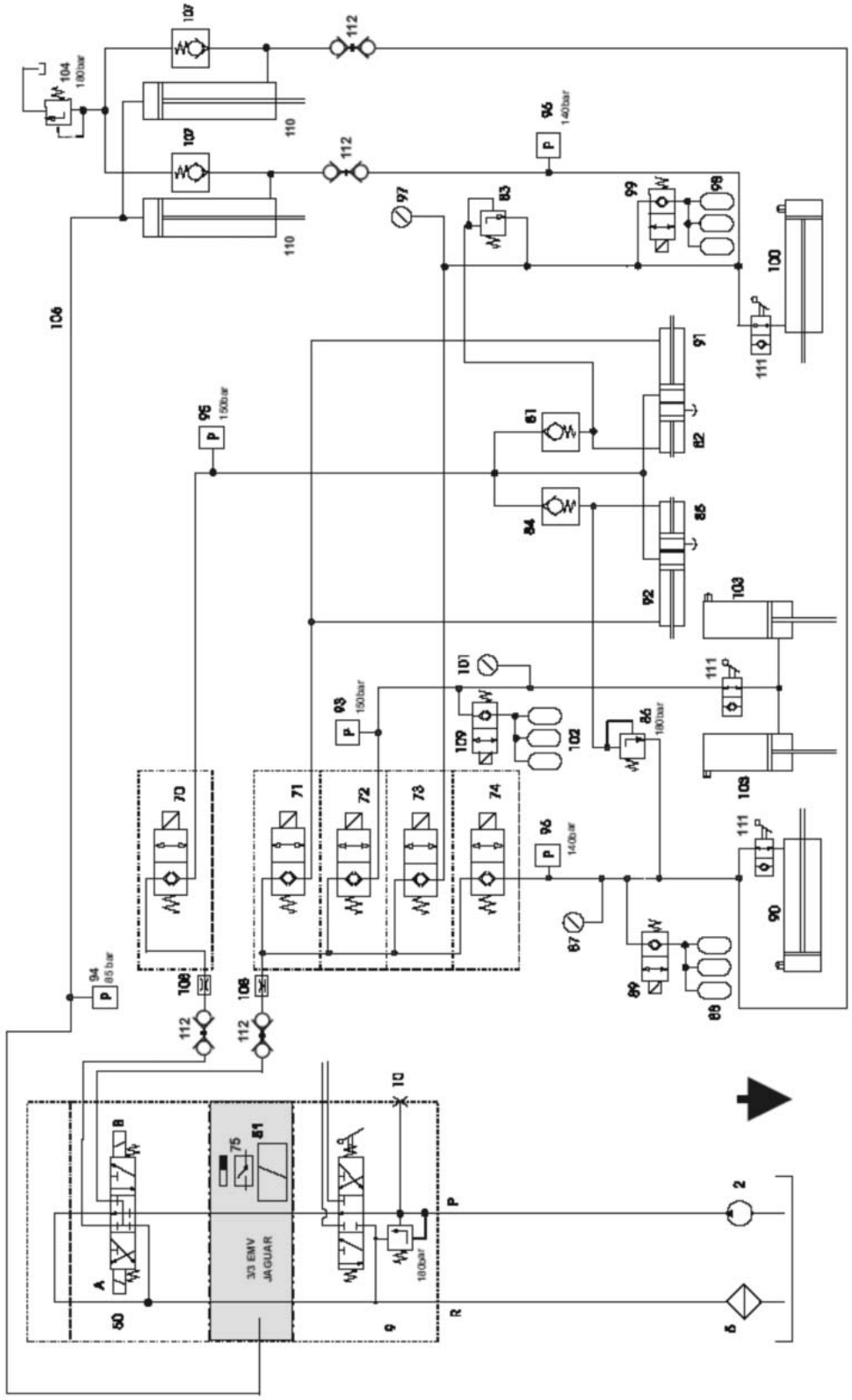


Dcvl 001

https://truckmanualshub.com/


### 1.2.2 Raising the entire mower unit

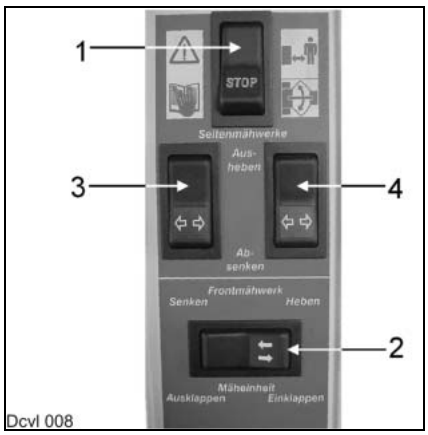


| Step | Action | Reaction |
|---|---|---|
| 1 | The “Raise front attachment” button on the forage harvester is pressed. | Via the 3/3 way solenoid valve of the jaguar (line 106), volume flow goes to the ram rod end of lifting cylinders (110). |
| 2 | The mower unit is raised. | When a pressure of 85 bar is reached while raising, the pressure switch 94 (normally open contact) switches. |
| 3 | The relays 12 and 15 now cut the power supply to the lock-up valve units 89, 99 and 109. | The lock-up valve units are closed. This is required to keep all mower units raised while raising the overall mower unit. (The oil does not flow into the accumulators 88, 98 and 102.) |
| 4 | The volume flow displaced from the rod spaces of the cylinders (on the forage harvester) is fed to the cylinders 90 and 100. | The cylinders 90 and 100 retract and thus raise the left and right mower units. |
| 5 | When the volume capacity of the rod spaces of cylinders 90 and 100 is exhausted, | the pressure rises and the pressure switches 96 switch the lock-up valve units 89 and 99 so that the excess volume flow is displaced into the accumulators 88 and 98. This ensures that no oil will escape from this circuit. |

### 1.2.3 Starting protection

| Step | Action | Reaction |
|---|---|---|
| 1 | If e.g. the right mower unit hits an obstacle. | The pressure in rod space of cylinder 85 rises. |
| 2 | When the pressure reaches 180 bar, | the pressure relief valve 86 opens. |
| 3 | Volume flow is displaced from the rod space of cylinder 85. | This volume flow goes to the rod space of cylinder 90. The right mower unit is raised and folds in. |

https://truckmanualshub.com/


JAGUAR 8500 C-6 / C8 hydraulic circuit diagram

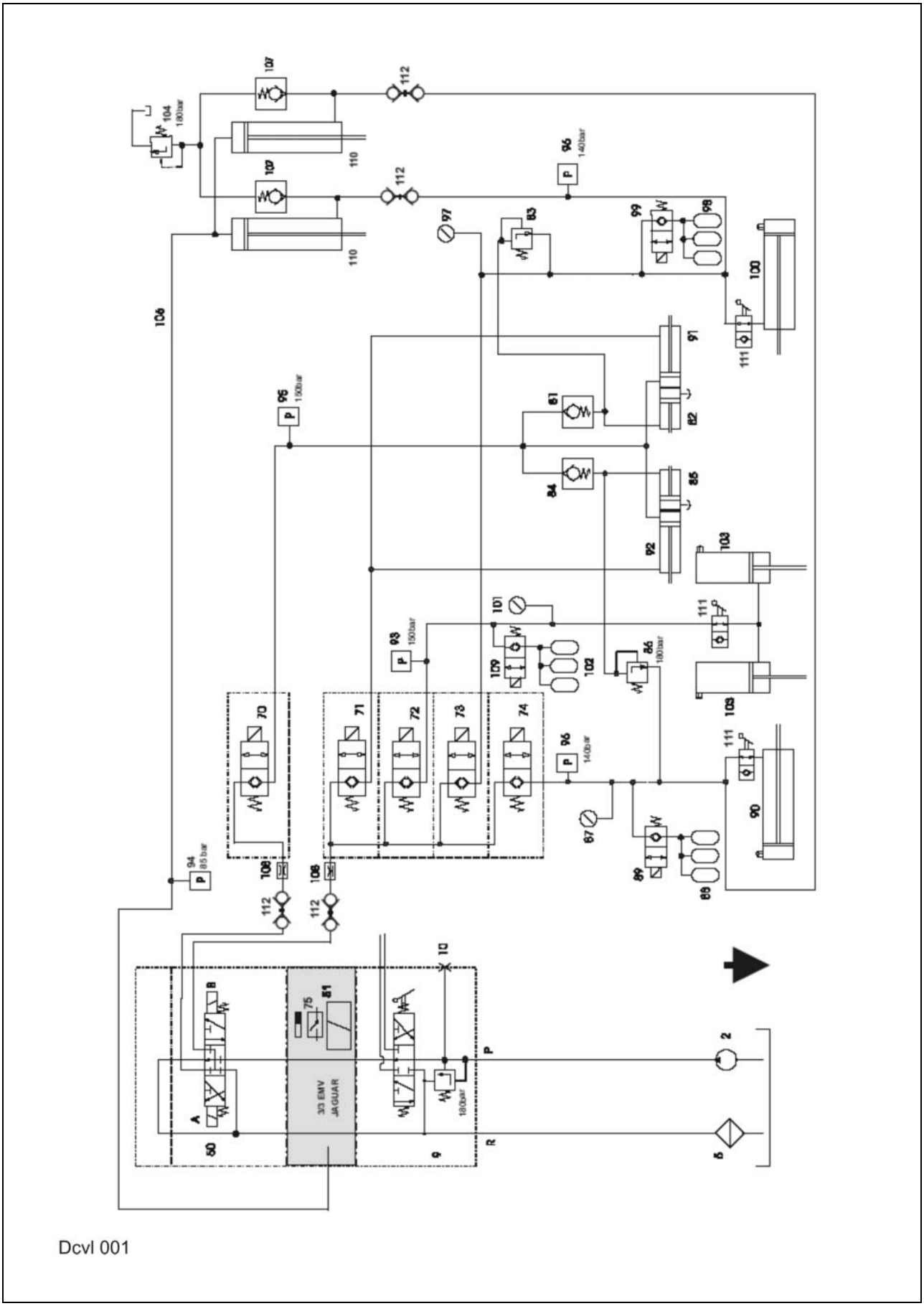

https://truckmanualshub.com/


### 1.2.4 Actuating from working to transport position

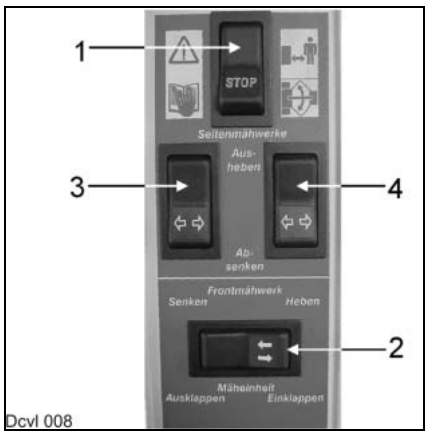


| Step | Action | Reaction |
|---|---|---|
| 1 | Shut down the mower unit. | The mower discs must not rotate any more. |
| 2 | Push the “Raise” key in the ground speed control lever (3/3 way solenoid valve is energized) | until the mower units have no more ground contact. |
| 3 | Push switch 2. | Solenoid valve 72 is energized.<br>Solenoid valve 50 goes to switch position B. |
| 4 | Volume flow goes to hydraulic cylinders 103. | The cylinders 103 raise the centre mower unit. |
| 5 | Cylinders 103 travel to their end stop. | The pressure rises. |
| 6 | When the pressure reaches 150 bar, the oil pressure switch 93 switches | Solenoid valves 70 and 71 are energized. |
| 7 | Volume flow flows through the energized solenoid valve 71 into the rod spaces of cylinders 91 and 92. | The volume flow displaced from the ram top spaces flows into the tank through the energized solenoid valve 70 and on via the 4/3 way solenoid valve 50B.<br>The side-mounted mower units are folded in. |

https://truckmanualshub.com/


JAGUAR 8500 C-6 / C8 hydraulic circuit diagram

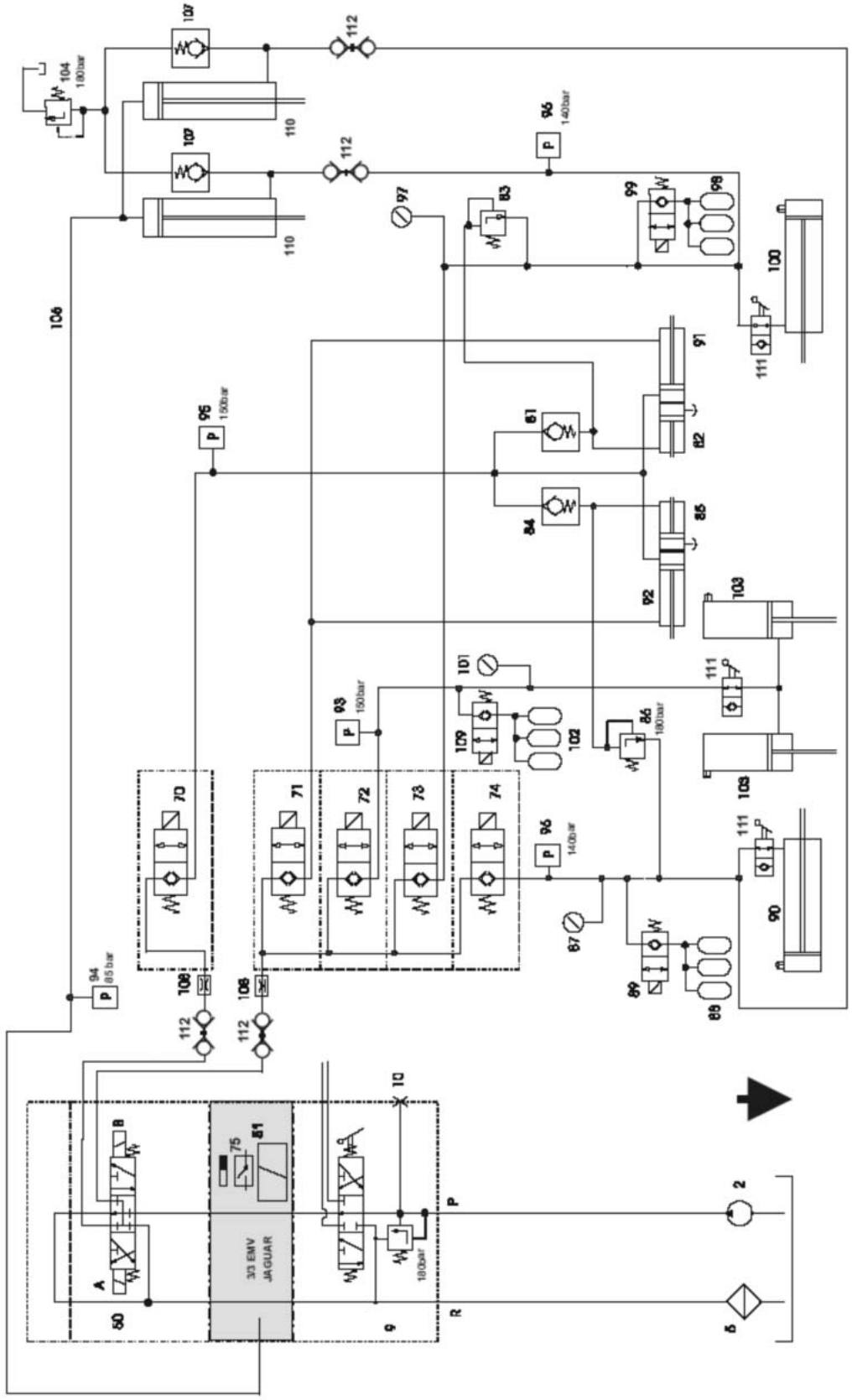


Dcvl 001

https://truckmanualshub.com/


# 2.0 Electric system JAGUAR 8500C, CISCO 8500C-6, -8

## 2.1 Electric circuit diagram

S1 Stop switch
S2 Disco fold in/out switch
S3 Left Disco raise/lower switch
S4 Right Disco raise/lower switch

5 Indicator light, power supply
6 Control box with switches S1, S2, S3 and S4
7 Socket outlet beneath the operator's platform
17 Terminal strip, plus in central terminal compartment (located above the relays)
19 Left terminal strip
19a Right terminal strip

12 Lock-up valve unit 89 and 99 relay
13 Relay for 4/3 way solenoid valve (item 50A)
14 Relay for 4/3 way solenoid valve (item 50B)
15 Relay for lock-up valve unit 109
50 4/3 way solenoid valve for front attachment (series equipment)
50A Solenoid coil (fold out mower units)
50B Solenoid coil (fold in mower unit, raise/lower)
51 Front attachment raise/lower 3/3 way solenoid valve

70 Solenoid coil, fold out right and left Disco
71 Solenoid coil, fold in right and left Disco
72 Solenoid coil, raise/lower centre Disco
73 Left Disco raise/lower solenoid coil
74 Right Disco raise/lower solenoid coil
75 Reed switch (only Jaguar 800 series)
Mounted to solenoid valve 51 (raise).
**Caution:** Observe installation position = lettering must face the magnet

76 **Switches and 3/3 way raise solenoid valve (only on Jaguar 600 series)**

89 Solenoid coil, right lock-up valve unit (closed when deenergized)
93 Oil pressure switch 150 bar (normally open contact), energizes solenoid valve 70
94 Oil pressure switch 85 bar (normally open contact), energizes relay 12
95 Oil pressure switch 150 bar (normally open contact), energizes solenoid valve 72
96 2x oil pressure switch 140 bar (normally closed contact), see chapter 2.2.8.
99 Solenoid coil, left lock-up valve unit (closed when deenergized)
109 Solenoid coil, centre lock-up valve unit (closed when deenergized)

D Diodes
F 10 A fuse
Z Central terminal compartment (the lines in the areas with a grey background are actually conducting paths on the board).

https://truckmanualshub.com/


Electric system Jaguar 8500C, Disco 8500C-6, C-8

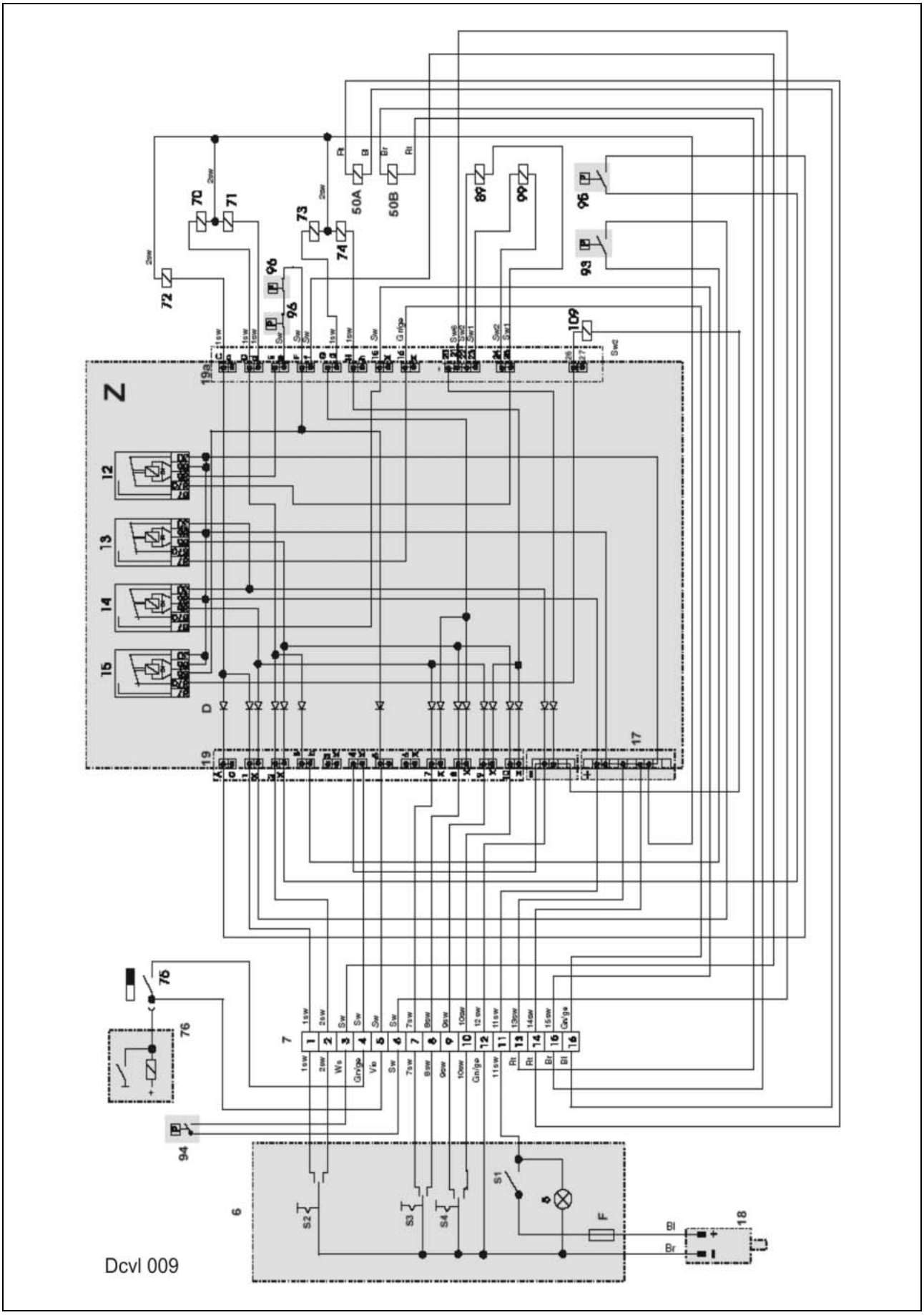

https://truckmanualshub.com/


## 2.2 Function

| | |
|---|---|
| 2.2.1 Putting into operation | Switch on stop switch 1.<br>Current is applied to all relays, terminal 86 and the solenoid valves. |
| 2.2.2 Raise left Disco | Actuate rocker switch 3. Earth is connected to pin 7 in connector 7.<br>Earth is also connected to relay 14 on terminal 85 and to solenoid valve 73. Relay 14 connects earth to the 4/3 way directional control valve 50B. |
| 2.2.3 Lower left Disco | Actuate rocker switch 3. Earth is connected to pin 7 in connector 8.<br>Earth is also connected to relay 13 on terminal 85 and to solenoid valve 73. Relay 13 connects earth to the 4/3 way directional control valve 50A. |
| 2.2.4 Raise right Disco | Actuate rocker switch 4.<br>Earth is connected via pin 9 of connector 7 to relay 14 on terminal 85 and to the solenoid valve 74. Relay 14 connects earth to the solenoid valve 50 which goes to switch position B. |
| 2.2.5 Lower right Disco | Actuate rocker switch 4.<br>Earth is connected via pin 10 of connector 7 to relay 13 on terminal 85 and to the solenoid valve 74. Relay 13 connects earth to the solenoid valve 50 which goes to switch position A. |
| 2.2.6 Moving the Disco to working position | Actuate rocker switch 2.<br>Earth is connected via pin 2 of connector 7 to relay 13 on terminal 85 and to the solenoid valves 70 and 71. Relay 13 connects earth to the solenoid valve 50 which goes to switch position A.<br>The mower unit folds out.<br>Upon reaching the end position and 150 bar, the oil pressure switch 95 connects earth to the solenoid valve 72. The front mower unit is lowered via the energized solenoid valve 72. |
| 2.2.7 Moving the Disco to transport position | Actuate rocker switch 2.<br>Earth is connected via pin 1 of connector 7 to relay 14 on terminal 85 and to the solenoid valve 72.<br>Relay 14 connects earth to the solenoid valve 50 which goes to switch position B.<br>The centre mower unit is raised.<br>Upon reaching the end position and 150 bar, the oil pressure switch 93 connects earth to the solenoid valves 70 and 71. The mower units are folded in. |

https://truckmanualshub.com/



Electric system Jaguar 8500C, Disco 8500C-6, C-8

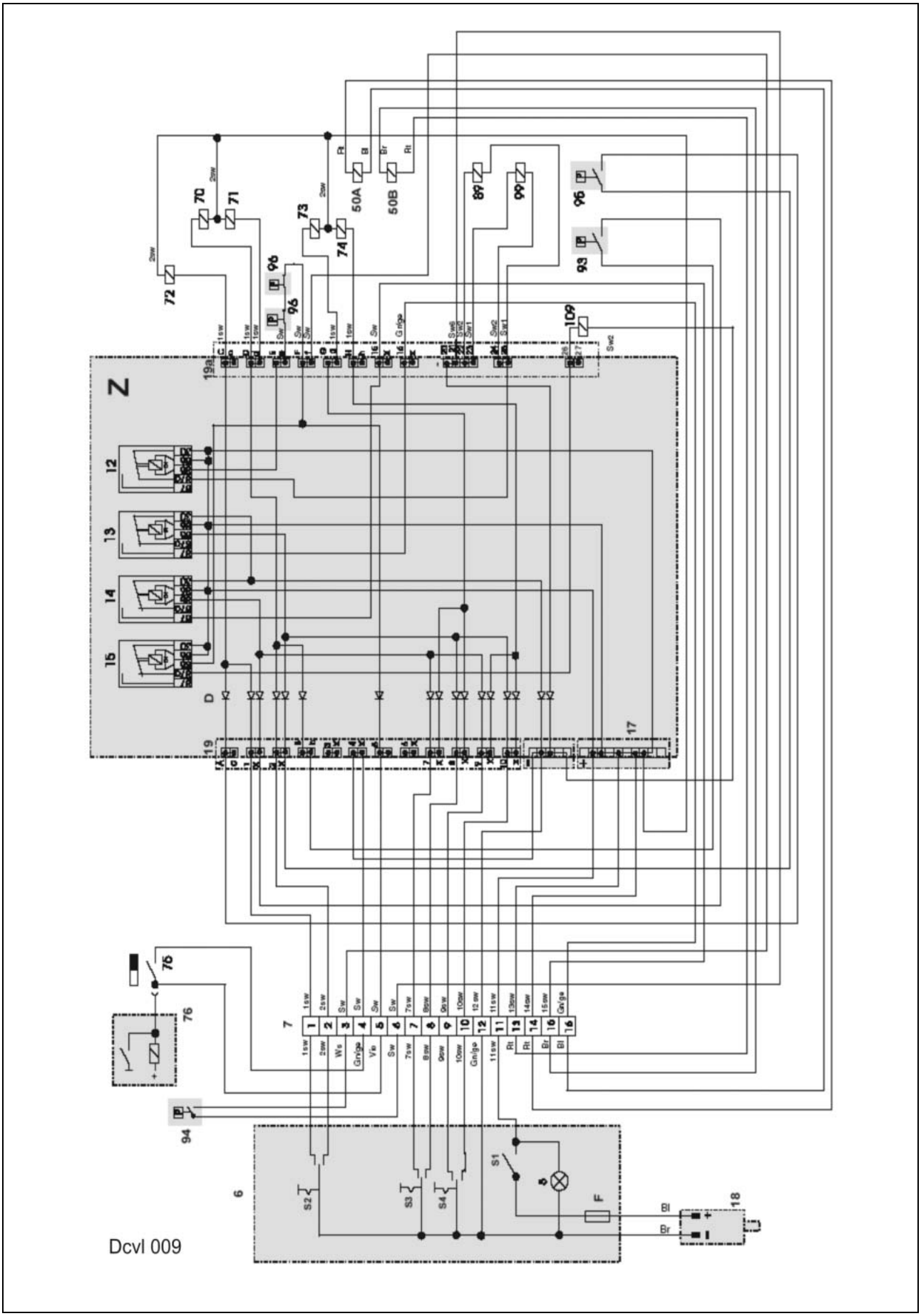

https://truckmanualshub.com/


2.2.8 Blocking the accumulator while raising the entire mower unit. (quick lift)

When the 3/3 way raise front attachment solenoid valve is actuated on the forage harvester, the Reed switch*75 connects earth to relay 15, terminal 85 and relay 12, terminal 85.
Relay 15 cuts the current to the lock-up valve unit 109.
Relay also cuts the current to the lock-up valve units 89 and 99 (the lock-up valve units are closed when deenergized).

When raising is complete, the mower units' weight generates a pressure of > 85 bar in the cylinders of the Jaguar front attachment.
The oil pressure switch 94 connects earth to relay 12, terminal 85 as long as the pressure in the lift cylinders is > 80 bar.
Relay 12 switches and cuts the power supply to the lock-up valve units 89, 99 and 109.
This is necessary to make the mower units remain in their position when lifting is complete on the turning area. When the pressure in cylinders 90 and 100 rises to above 140 bar, the oil pressure switches 96 open briefly.
Earth connected to relay 12, terminal 85 drops out and the relay connects the current supply to the lock-up valve units 89 and 99.
The lock-up valve units open and the accumulators receive oil from the ram rod end (from the front attachment cylinders on the Jaguar) so that there is no oil loss and no oil can flow from the system into the tank (pressure relief valve 104).

* On the Jaguar 800, the Reed switch connects earth.
On the Jaguar 600, earth is supplied directly from the 3/3 way „Raise“ solenoid valve.

https://truckmanualshub.com/


Electric system Jaguar 8500C, Disco 8500C-6, C-8

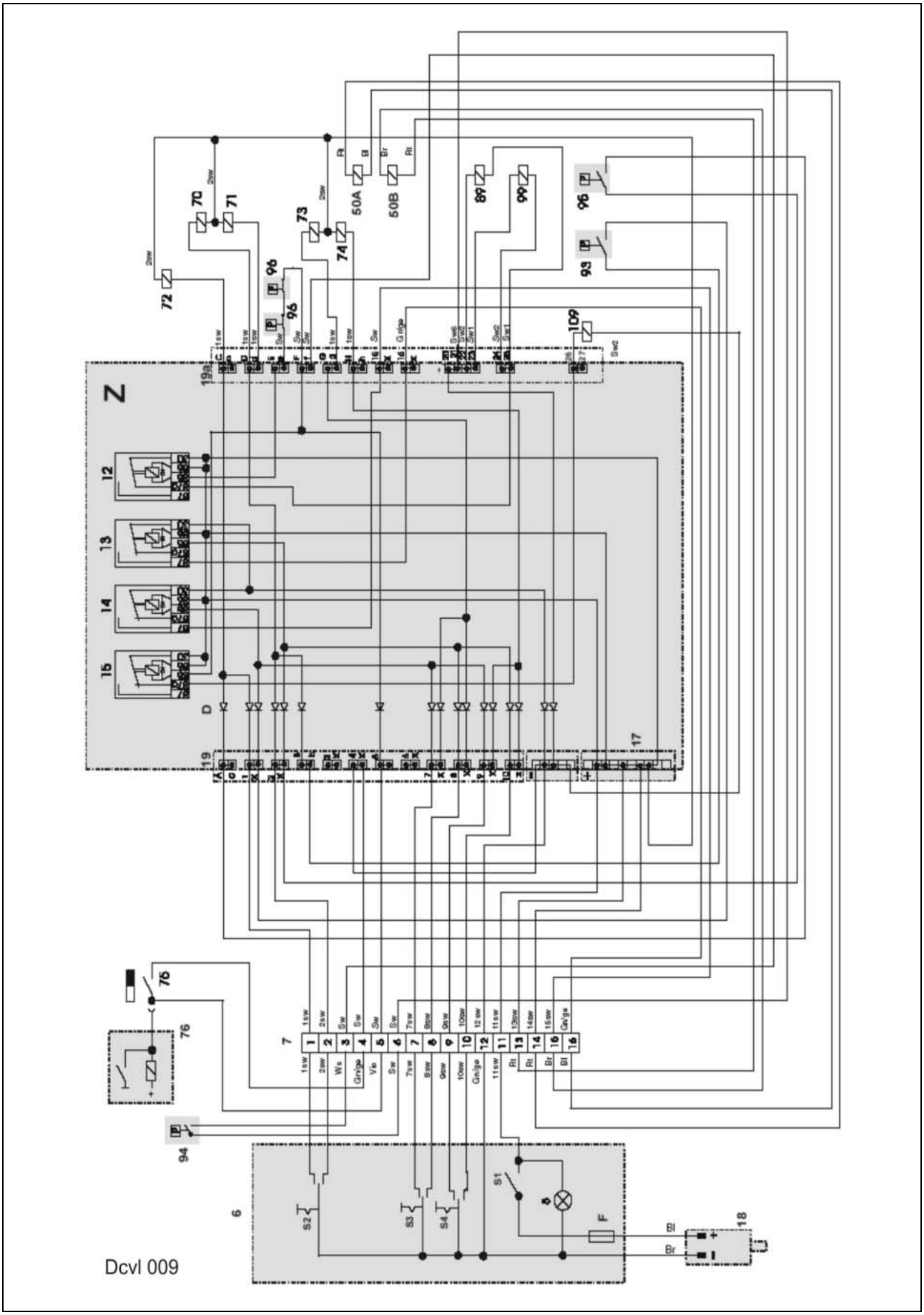

https://truckmanualshub.com/


## 2.3 Central terminal compartment

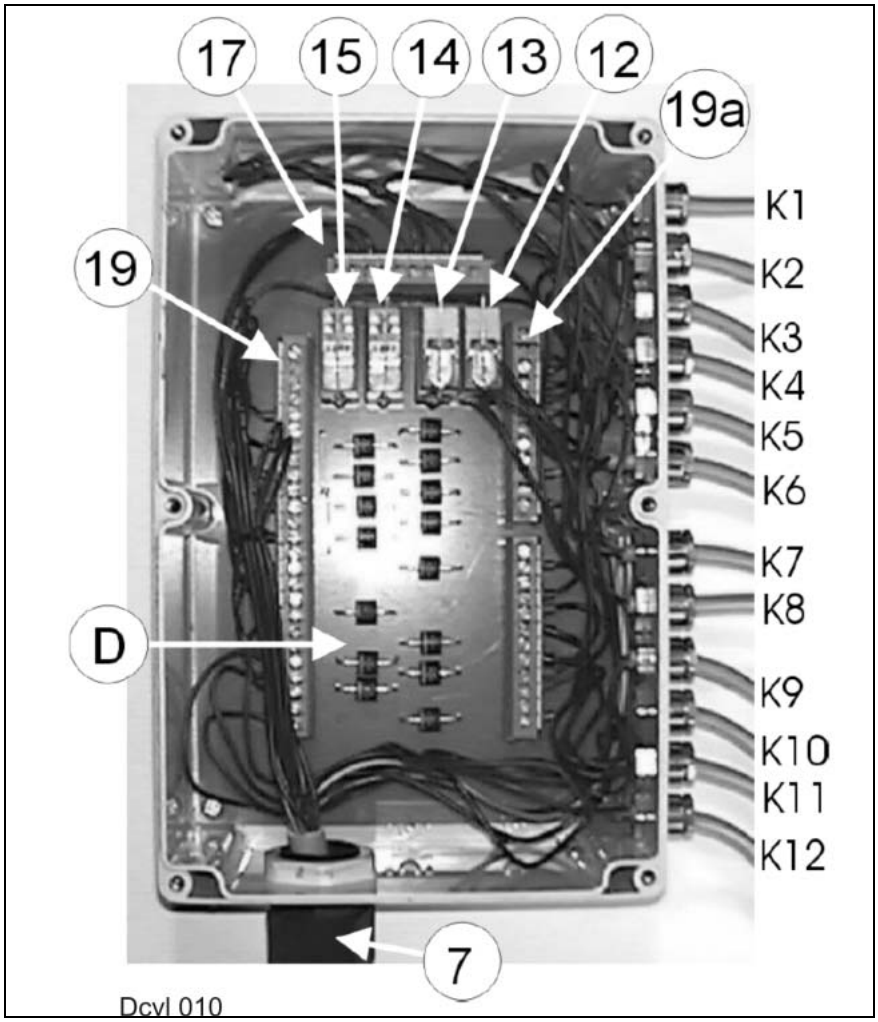


| | |
|---|---|
| 7 | Central terminal compartment connector |
| 12 | Lock-up valve unit 89 and 99 relay |
| 13 | Relay for 4/3 way solenoid valve (item 50A) |
| 14 | Relay for 4/3 way solenoid valve (item 50B) |
| 15 | Relay for lock-up valve unit 109 |
| 17 | Terminal strip, plus in central terminal compartment (located above the relays) |
| 19 | Left terminal strip |
| 19a | Right terminal strip |
| | |
| K1 | Raise/lower right side-mounted mower unit, solenoid valve 74 |
| K2 | Raise/lower left side-mounted mower unit, solenoid valve 73 |
| K3 | Front mower unit, solenoid valve 72 |
| K4 | Right mower unit lock-up valve unit, solenoid valve 89 |
| K5 | Left mower unit lock-up valve unit, solenoid valve 99 |
| K6 | Front mower unit lock-up valve unit, solenoid valve 109 |
| K7 | Fold out side-mounted mower unit, solenoid valve 70 |
| K8 | Fold in side-mounted mower unit, solenoid valve 71 |
| K9 | 140 bar pressure switch, item 96 |
| K10 | 140 bar pressure switch, item 96 |
| K11 | 150 bar pressure switch (fold in side-mounted mower units), item 93 |
| K12 | 150 bar pressure switch (fold out side-mounted mower units), item 95 |
| | |
| D | Diodes |

https://truckmanualshub.com/


**Central terminal compartment, from 2000**

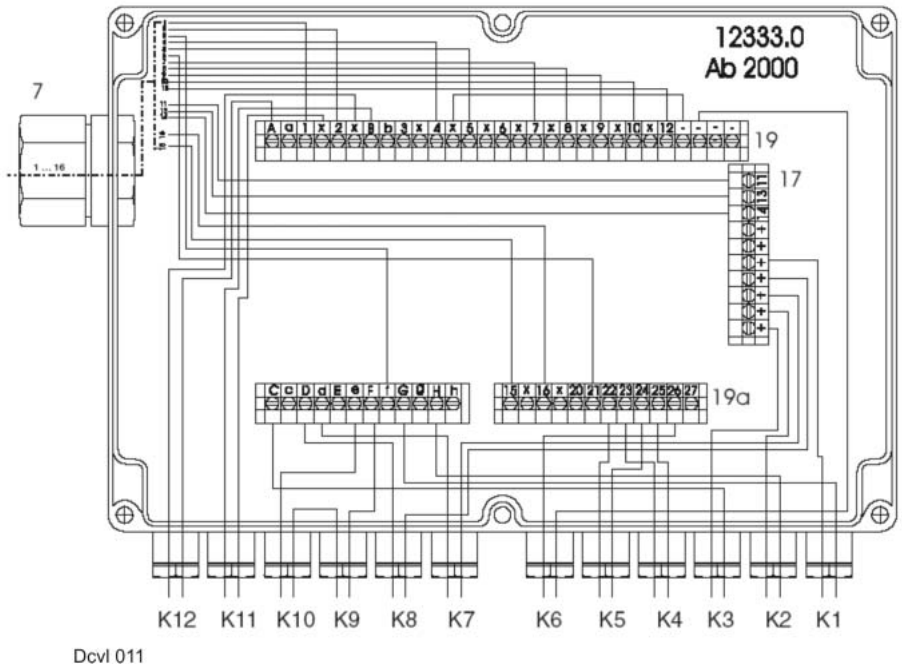


| | |
|---|---|
| 7 | Central terminal compartment connector |
| 12 | Lock-up valve unit 89 and 99 relay |
| 13 | Relay for 4/3 way solenoid valve (item 50A) |
| 14 | Relay for 4/3 way solenoid valve (item 50B) |
| 15 | Relay for lock-up valve unit 109 |
| 17 | Terminal strip, plus in central terminal compartment (located above the relays) |
| 19 | Left terminal strip |
| 19a | Right terminal strip |
| | |
| K1 | Raise/lower right side-mounted mower unit, solenoid valve 74 |
| K2 | Raise/lower left side-mounted mower unit, solenoid valve 73 |
| K3 | Front mower unit, solenoid valve 72 |
| K4 | Right mower unit lock-up valve unit, solenoid valve 89 |
| K5 | Left mower unit lock-up valve unit, solenoid valve 99 |
| K6 | Front mower unit lock-up valve unit, solenoid valve 109 |
| K7 | Fold out side-mounted mower unit, solenoid valve 70 |
| K8 | Fold in side-mounted mower unit, solenoid valve 71 |
| K9 | 140 bar pressure switch, item 96 |
| K10 | 140 bar pressure switch, item 96 |
| K11 | 150 bar pressure switch (fold in side-mounted mower units), item 93 |
| K12 | 150 bar pressure switch (fold out side-mounted mower units), item 95 |

https://truckmanualshub.com/


**Central terminal compartment, up to 2000**

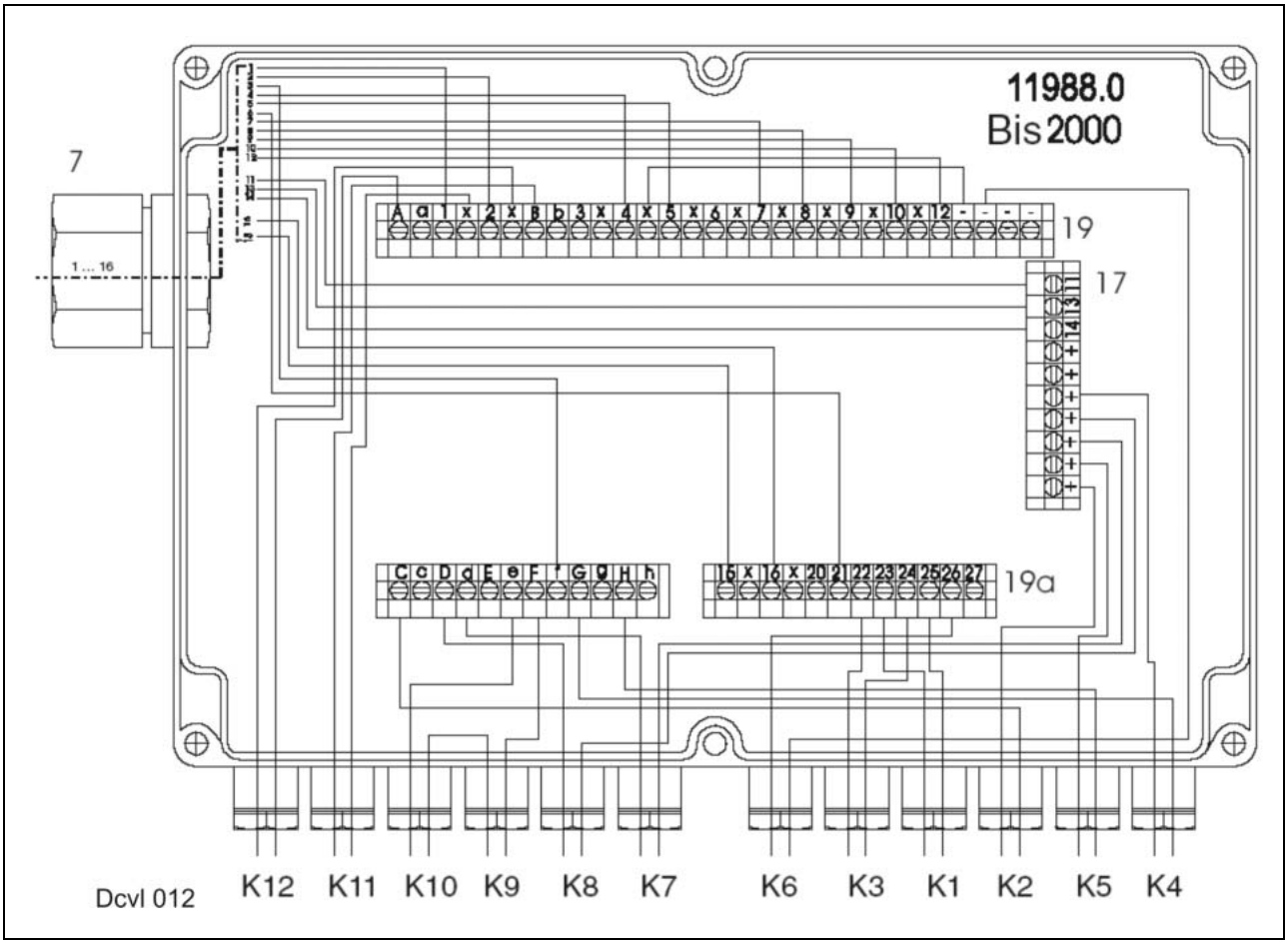


**Differences as compared with central terminal compartment "from 2000":**
The assignment of inputs 1 to K5 is different.
The connecting terminals on the board have not been changed.

| | |
|---|---|
| 7 | Central terminal compartment connector |
| 12 | Lock-up valve unit 89 and 99 relay |
| 13 | Relay for 4/3 way solenoid valve (item 50A) |
| 14 | Relay for 4/3 way solenoid valve (item 50B) |
| 15 | Relay for lock-up valve unit 109 |
| 17 | Terminal strip, plus in central terminal compartment (located above the relays) |
| 19 | Left terminal strip |
| 19a | Right terminal strip |
| K1 | Raise/lower right side-mounted mower unit, solenoid valve 74 |
| K2 | Raise/lower left side-mounted mower unit, solenoid valve 73 |
| K3 | Front mower unit, solenoid valve 72 |
| K4 | Right mower unit lock-up valve unit, solenoid valve 89 |
| K5 | Left mower unit lock-up valve unit, solenoid valve 99 |
| K6 | Front mower unit lock-up valve unit, solenoid valve 109 |
| K7 | Fold out side-mounted mower unit, solenoid valve 70 |
| K8 | Fold in side-mounted mower unit, solenoid valve 71 |
| K9 | 140 bar pressure switch, item 96 |
| K10 | 140 bar pressure switch, item 96 |
| K11 | 150 bar pressure switch (fold in side-mounted mower units), item 93 |
| K12 | 150 bar pressure switch (fold out side-mounted mower units), item 95 |

https://truckmanualshub.com/


Pin assignment of switches in the CCT (as seen from the rear)

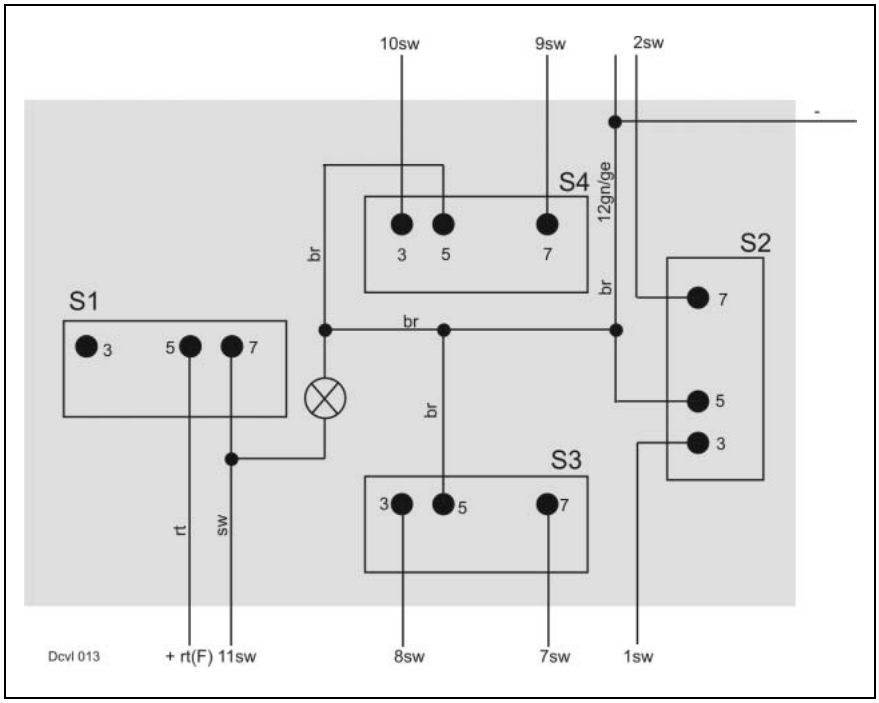


S1 Stop switch
S2 Disco fold in/out switch
S3 Left Disco raise/lower switch
S4 Right Disco raise/lower switch

https://truckmanualshub.com/


# 3.0 Installation information

## 3.1 Timing of drives

Arrangement of pinion units A and B and of drive input module E

In addition to the drive input module E, 6 rows of pinions are provided in the mower head.
These are sub-divided into four 4 versions and two B versions. The B versions are marked with red paint at the bottom.

**Left mower unit**

A Pinion unit A
B Pinion unit B
E Drive input module

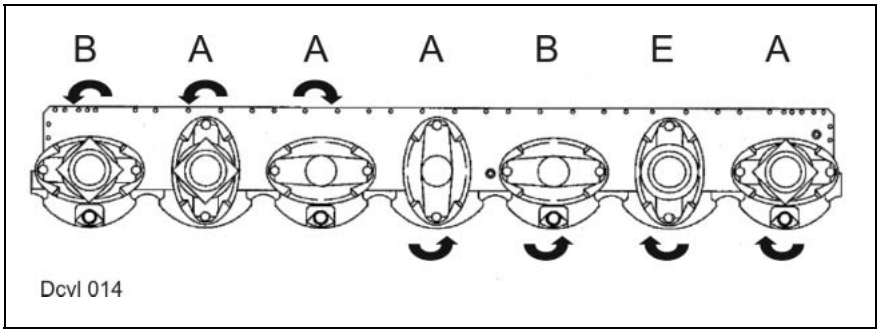


**Right mower unit**

A Pinion unit A
B Pinion unit B
E Drive input module

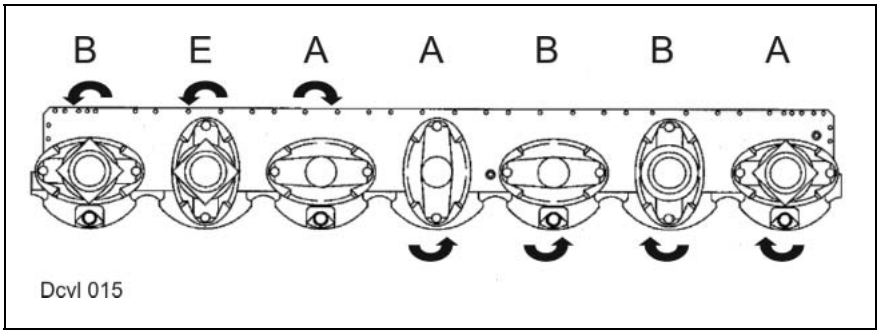


**Centre mower unit**

A Pinion unit A
B Pinion unit B
E Drive input module

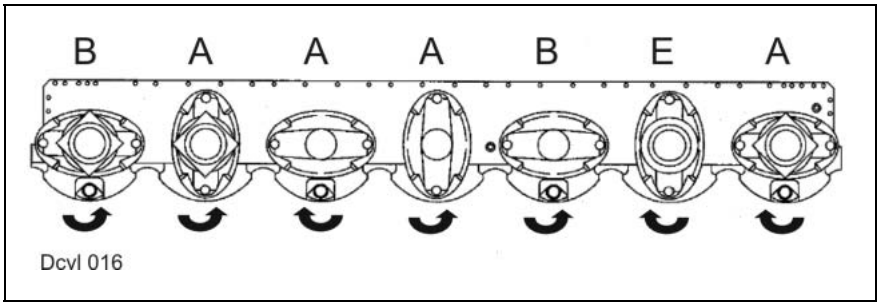

https://truckmanualshub.com/


### 3.2 Installation of pinion units

7 Flange
13 Pinion shaft

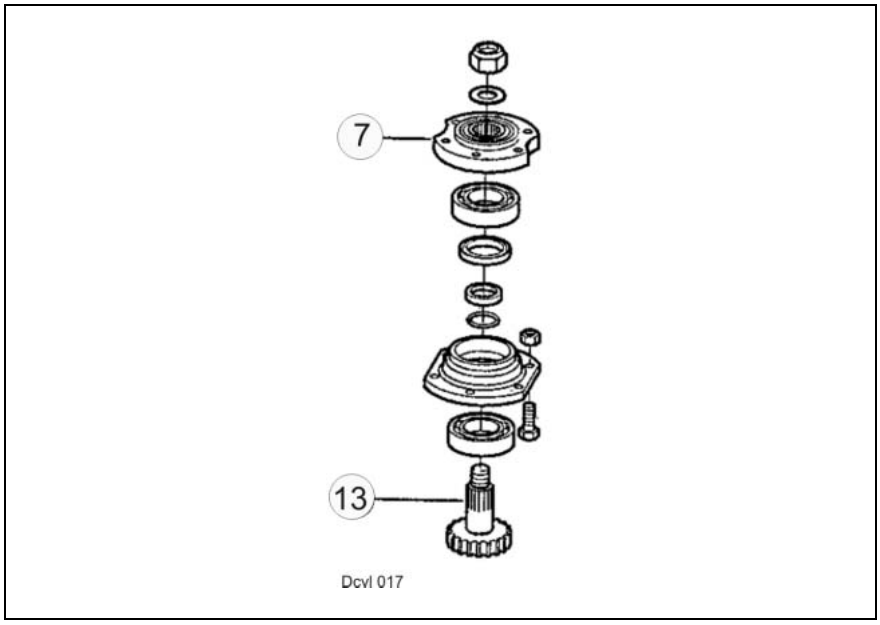


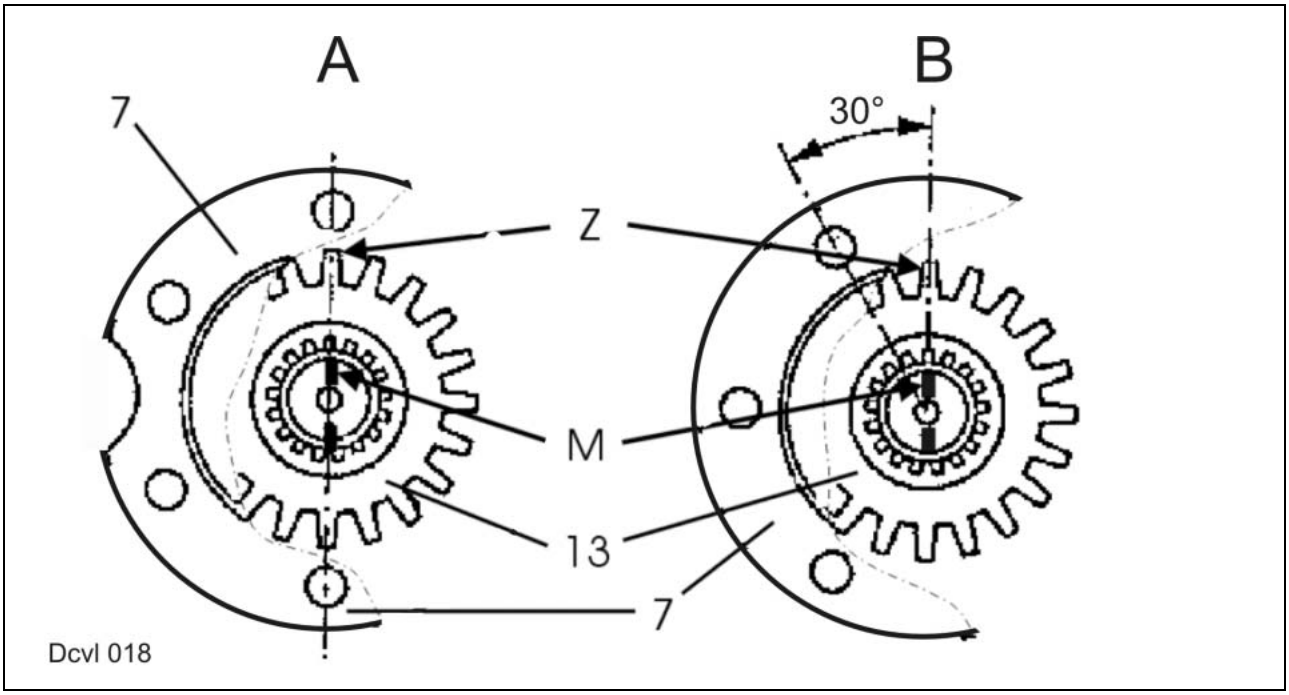


| | |
|---|---|
| Pinion unit A | The marking M on the pinion shaft (13), the tooth centre Z and the centre of the flange bore must be aligned. |
| Pinion unit B | The marking M on the shaft, the tooth centre Z and the centre between two flange bores must be aligned. |

https://truckmanualshub.com/


### 3.3 Safety module

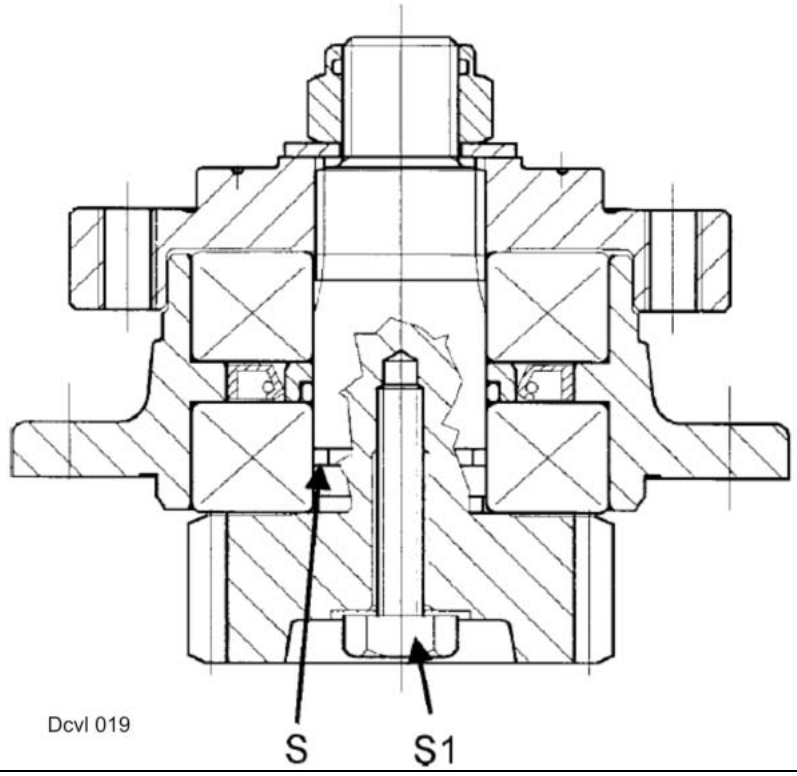


S Breaking point for cases of sudden load

S1 Safety screw (when sudden loads occur and the pinion has been sheared off the shaft, this screw holds both parts together and thus avoids major damage in the mower head).

https://truckmanualshub.com/


### 3.4 Tightening torques

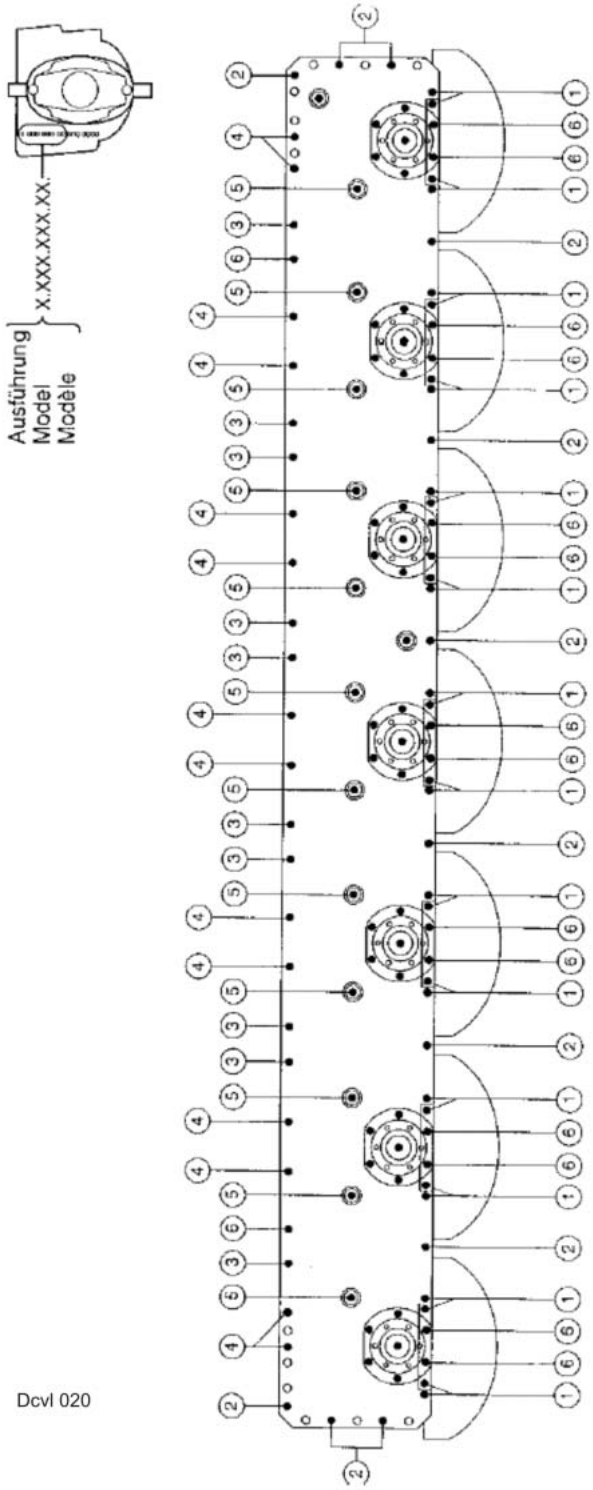


| Item | Remark | Tightening torque |
|---|---|---|
| 1 | M 10x30 bolt | 85 Nm |
| 2 | M 10x20 countersunk head bolt | 70 Nm |
| 3 | M 10x19 bolt | 85 Nm |
| 4 | M 10x55x45 countersunk head bolt | 70 Nm |
| 5 | M 20x30 cheese-head screw | 650 Nm |
| 6 | M 10x40 bolt | 85 Nm |

https://truckmanualshub.com/


## 4.0 Drive diagram

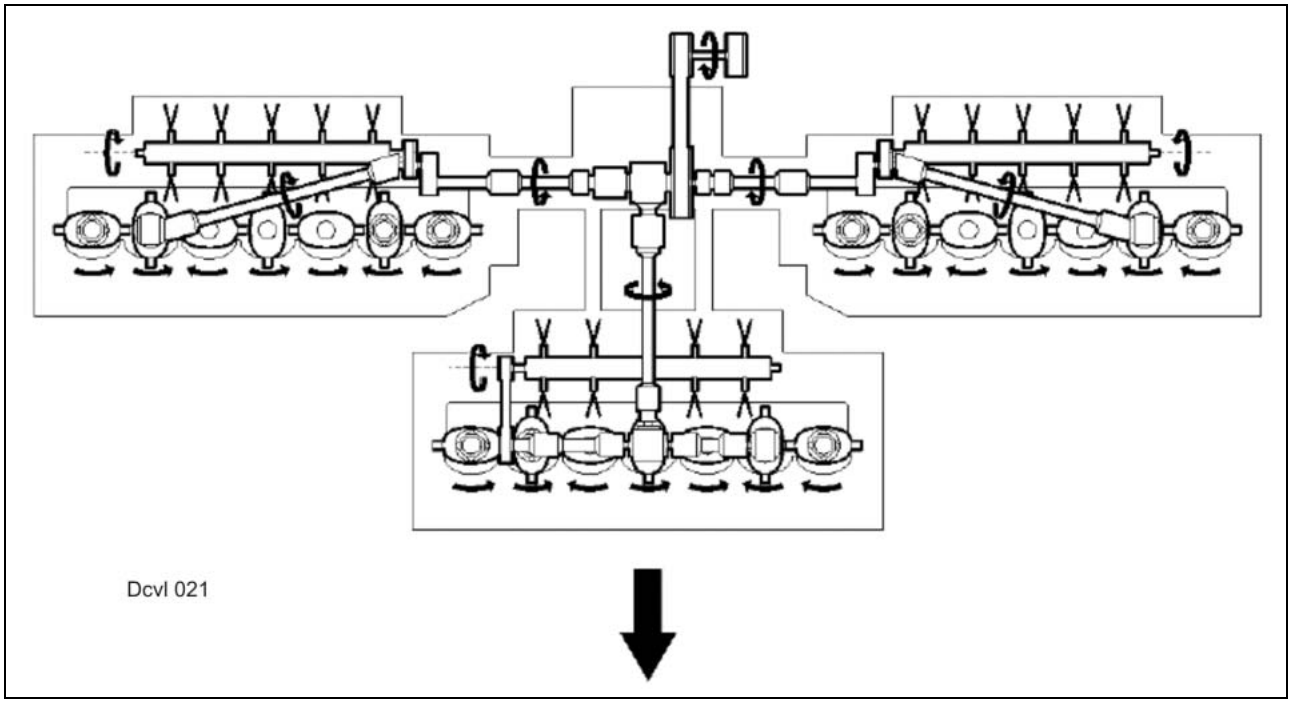

https://truckmanualshub.com/


**1.0 Hydraulic System....2**

1.1 Hydraulic circuit diagram....2

**2.0 Electric System....4**

2.1 Electric circuit diagram....4

**3.0 Installation information....6**

3.1 Timing of drives....6
3.2 Installation of pinion units....7
3.3 Safety module....8
3.4 Tightening torques....9

**4.0 Drive diagram....10**

https://truckmanualshub.com/


# 1.0 Hydraulic System

## 1.1 Hydraulic circuit diagram

1 Coupling, single-acting
2 Cylinder for front mower units
3 Cylinder for front mower units
4 Oil pressure switch, set to 190 bar
5 Flow divider
6 Cylinder with 3/2 way directional control valve – Raise/lower side-mounted mower units
7 Cylinder with 3/2 way directional control valve – Raise/lower side-mounted mower units

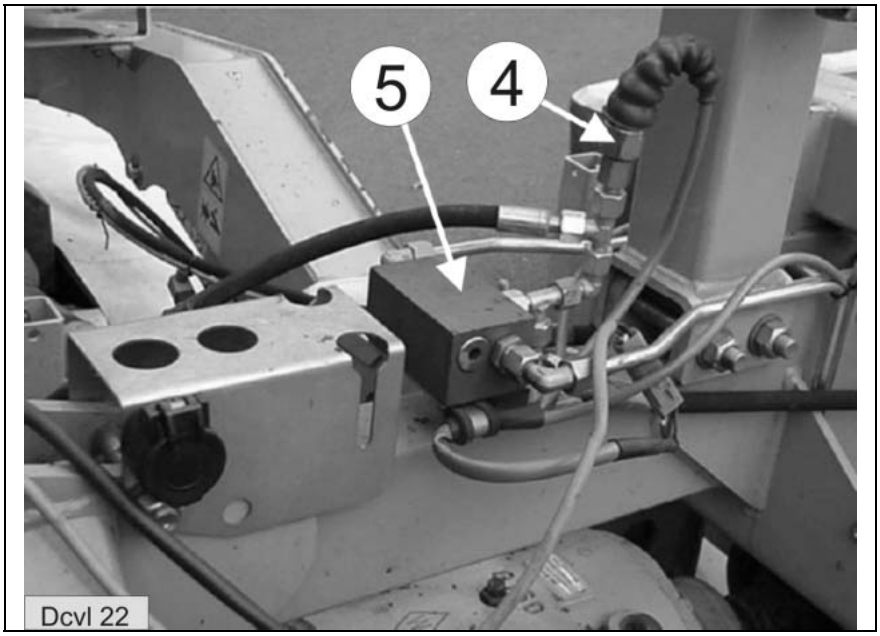


4 Oil pressure switch, set to 190 bar
5 Flow divider

https://truckmanualshub.com/


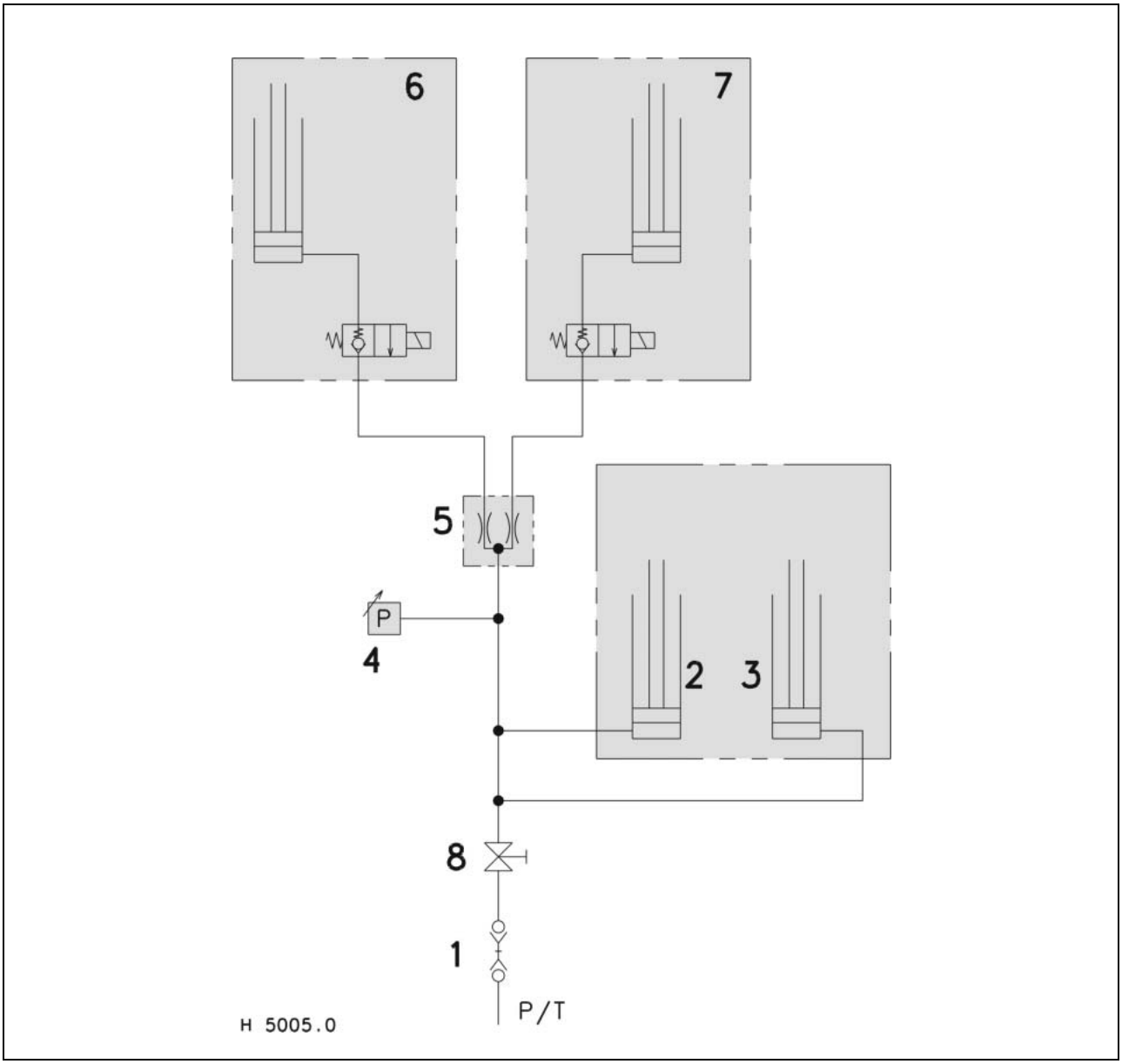

https://truckmanualshub.com/


# 2.0 Electric System

## 2.1 Electric circuit diagram

1 Connector – tractor connection
2 Control terminal
3 Cable connections
4 4-pin connector for control terminal – basic machine
5 Oil pressure switch
6 Solenoid valve on cylinder, left
7 Solenoid valve on cylinder, right

Activating / deactivating the transport stop

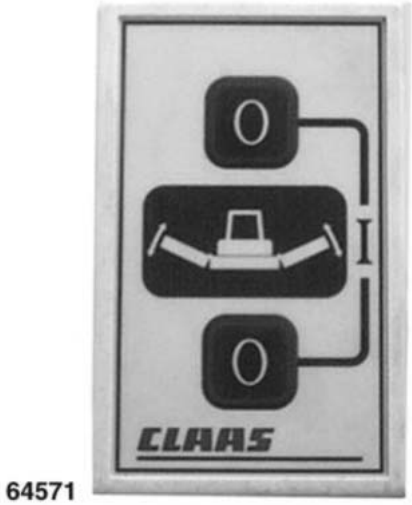


Deactivating the transport stop

Press both “0” keys simultaneously. Both LEDs (L) light up; the two 2/2 way solenoid valves (6 and 7) on the cylinder are energized and are open.

Activating the transport stop

Raise all mower units. This makes the system pressure rise; at 190 bar, the oil pressure switch (4) activates the transport stop automatically. Both LEDs have gone out.

or

The transport stop is active whenever **one** of the two "0" keys is pressed. Both LEDs have gone out.

https://truckmanualshub.com/


DISCO 8500 C (tractor) electric circuit diagram

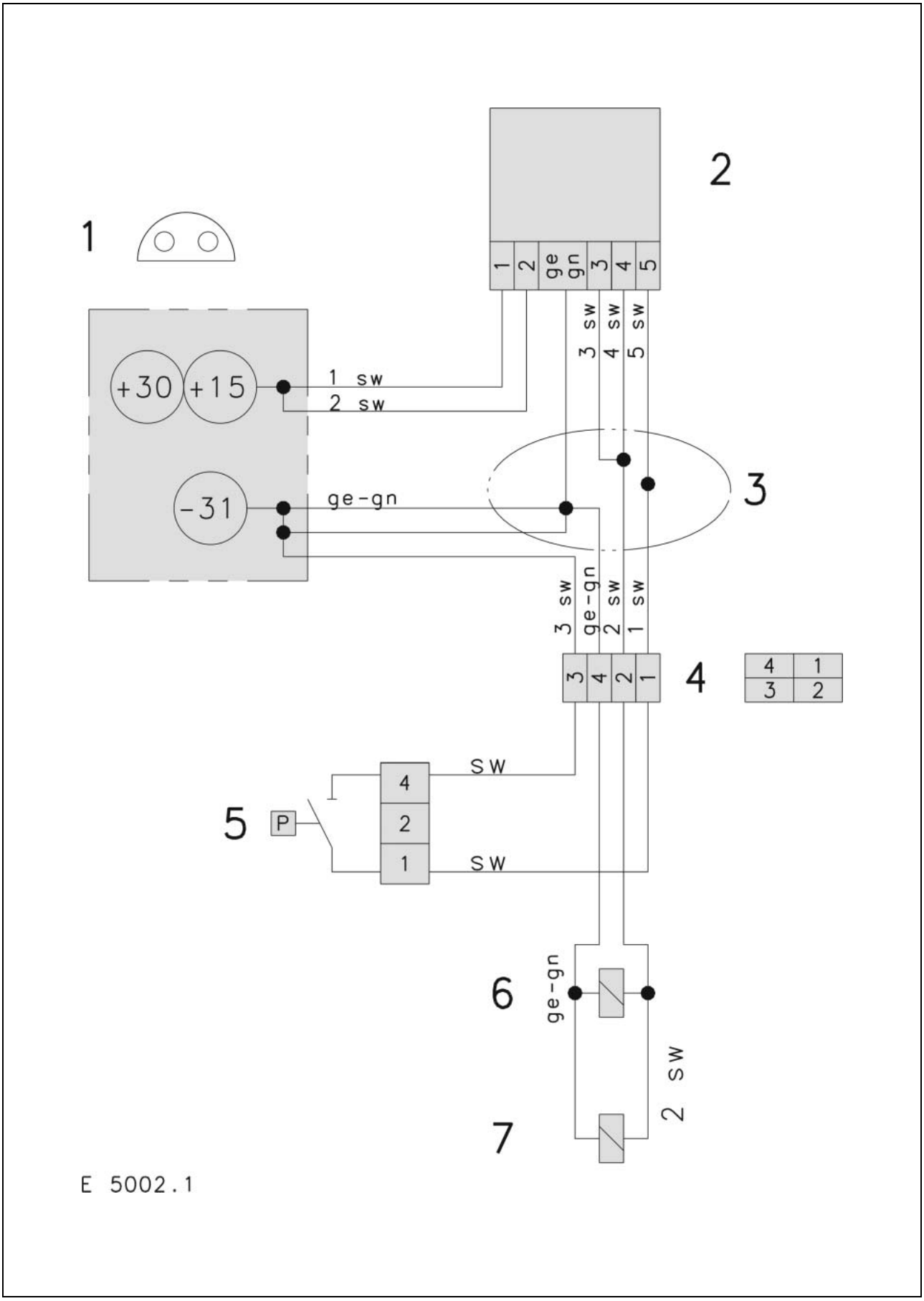

https://truckmanualshub.com/


# 3.0 Installation information

## 3.1 Timing of drives

Arrangement of pinion units A and B and of drive input module E

In addition to the drive input module E, 6 rows of pinions are provided in the mower head.
These are sub-divided into four 4 versions and two B versions. The B versions are marked with red paint at the bottom.

**Left mower unit**

A Pinion unit A
E Drive input module

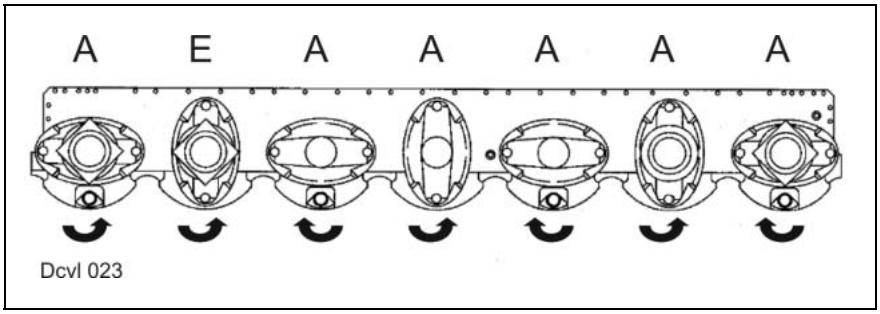


**Right mower unit**

A Pinion unit A
E Drive input module

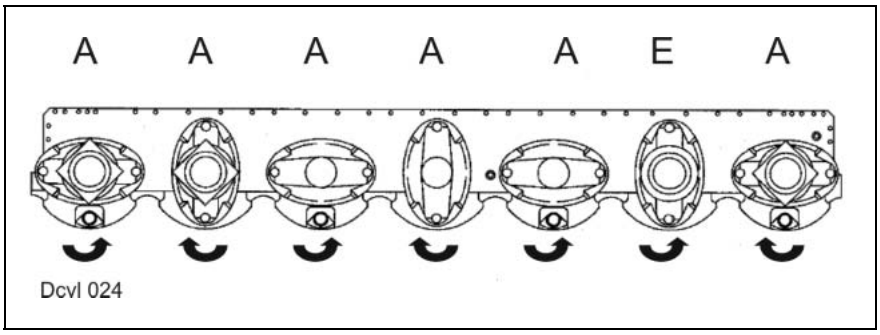


**Centre mower unit**

A Pinion unit A
B Pinion unit B
E Drive input module

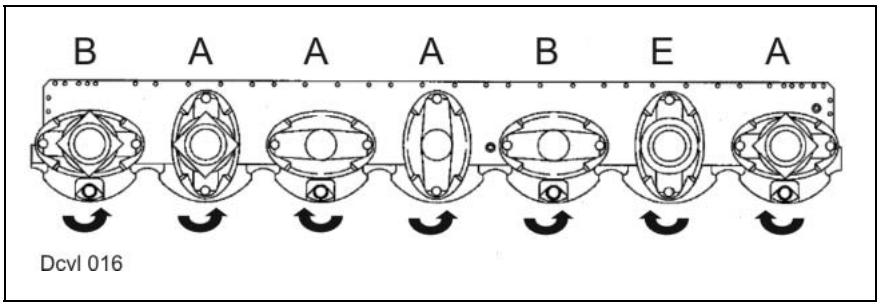

https://truckmanualshub.com/


### 3.2 Installation of pinion units

7 Flange
13 Pinion shaft

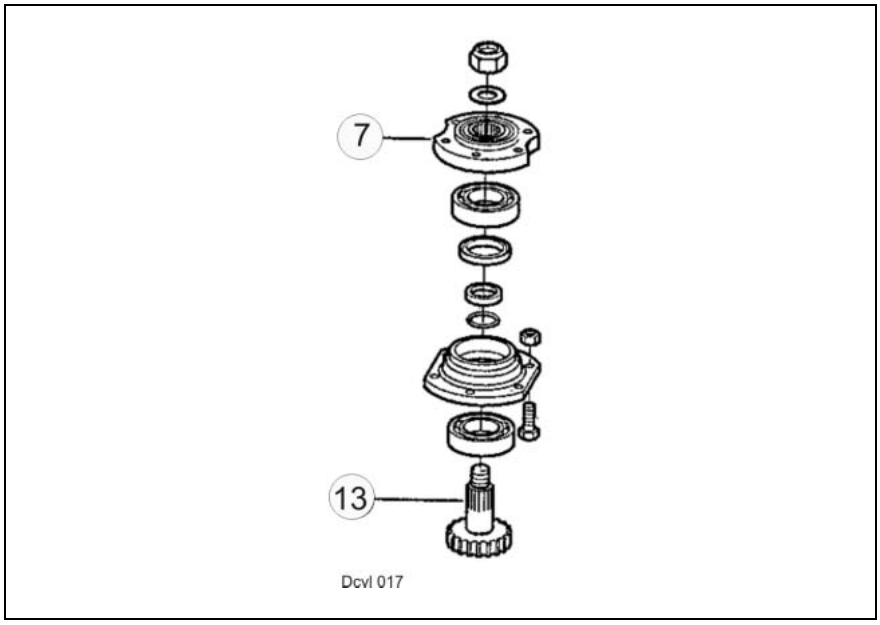


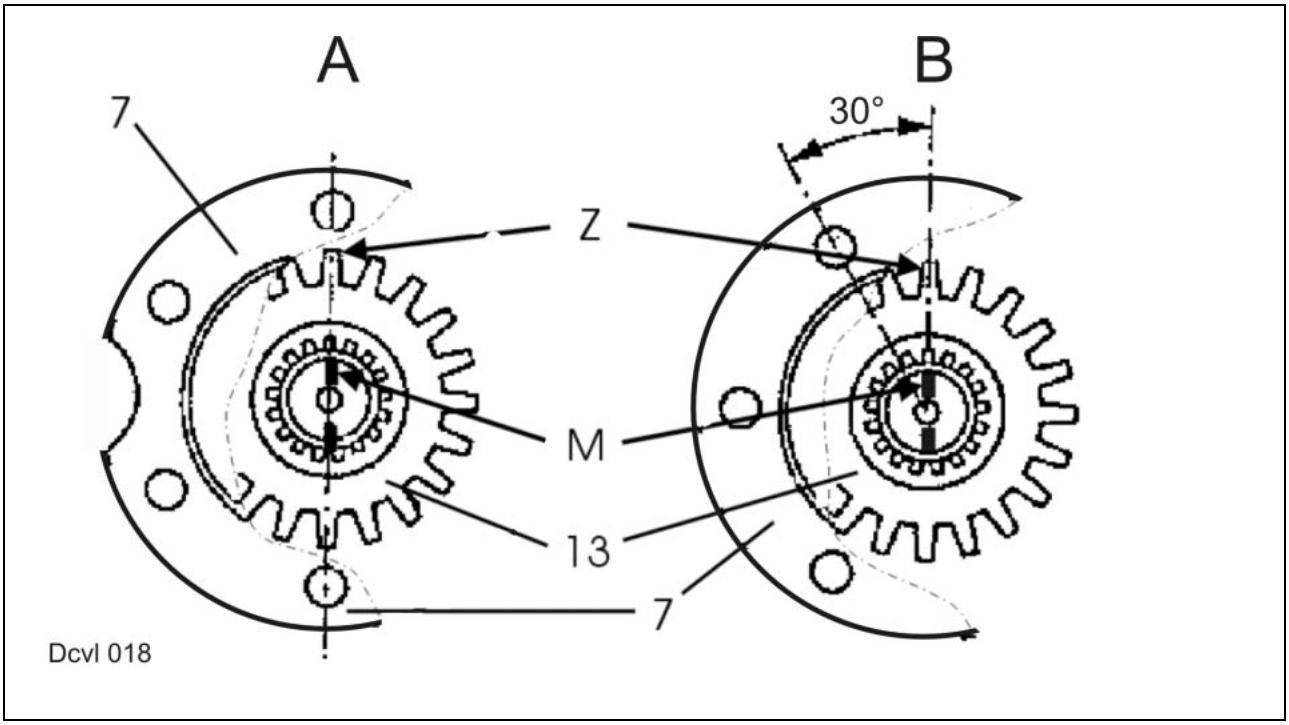


| | |
|---|---|
| Pinion unit A | The marking M on the pinion shaft (13), the tooth centre Z and the centre of the flange bore must be aligned. |
| Pinion unit B | The marking M on the shaft, the tooth centre Z and the centre between two flange bores must be aligned. |

https://truckmanualshub.com/


### 3.3 Safety module

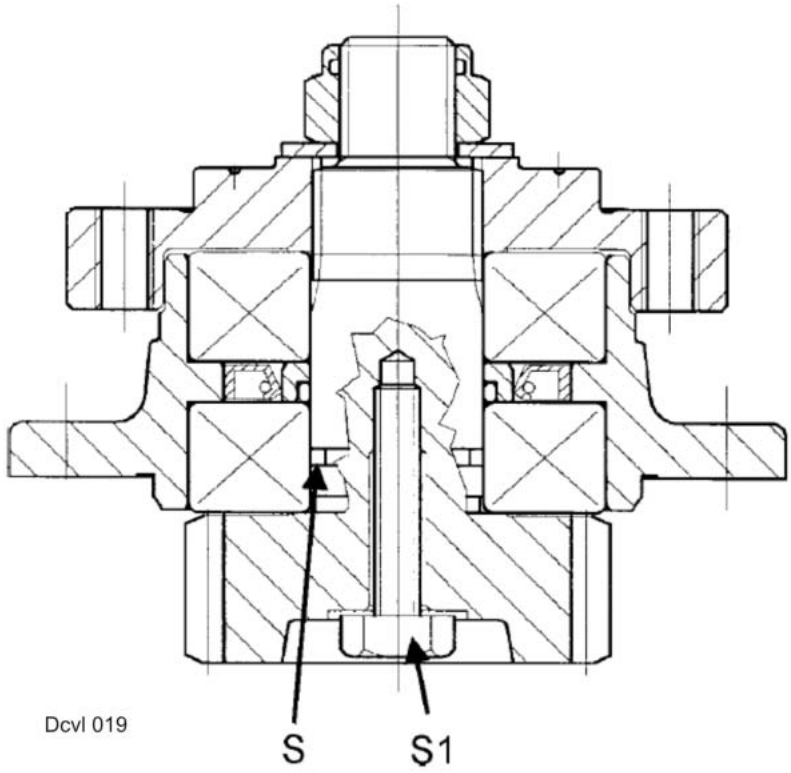


S Breaking point for cases of sudden load

S1 Safety screw (when sudden loads occur and the pinion has been sheared off the shaft, this screw holds both parts together and thus avoids major damage in the mower head).

https://truckmanualshub.com/


### 3.4 Tightening torques

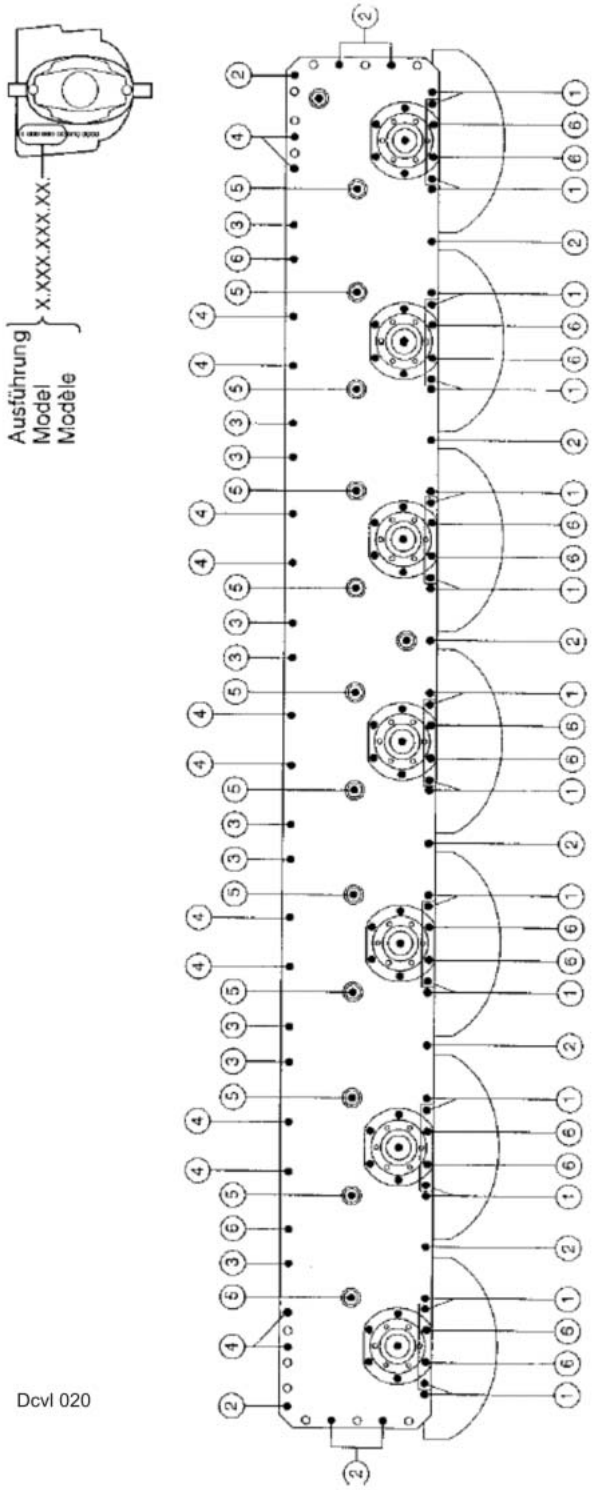


| Item | Remark | Tightening torque |
|---|---|---|
| 1 | M 10x30 bolt | 85 Nm |
| 2 | M 10x20 countersunk head bolt | 70 Nm |
| 3 | M 10x19 bolt | 85 Nm |
| 4 | M 10x55x45 countersunk head bolt | 70 Nm |
| 5 | M 20x30 cheese-head screw | 650 Nm |
| 6 | M 10x40 bolt | 85 Nm |

https://truckmanualshub.com/


## 4.0 Drive diagram

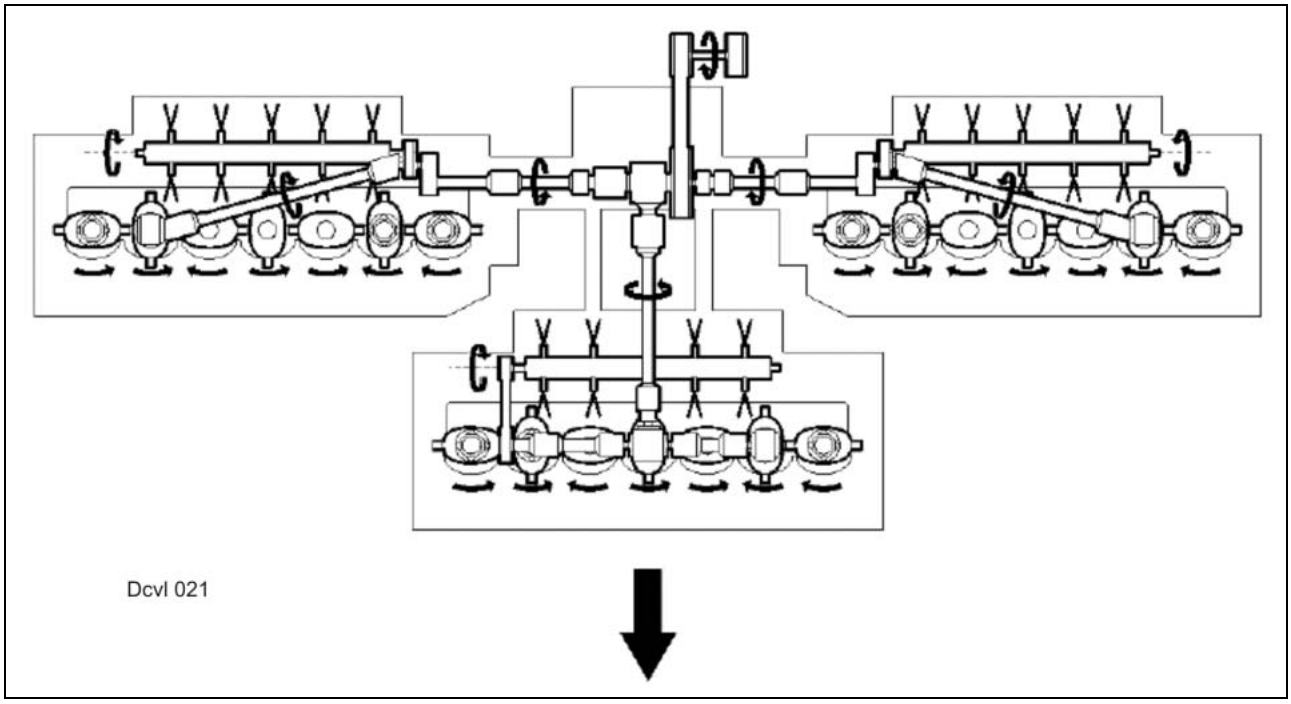

https://truckmanualshub.com/


Figure:
Push-type combination

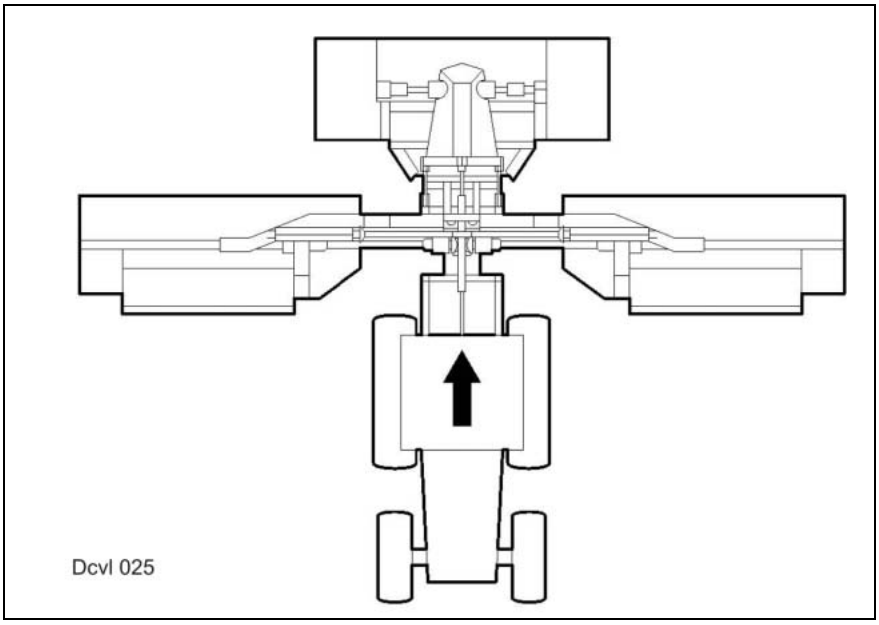


Front mower unit: Standard Disco 3000FC
Side-mounted mower units: Identical with Disco 300C except for the frame, the drive and the feed drum.

Figure:
Push-type/pull-type combination

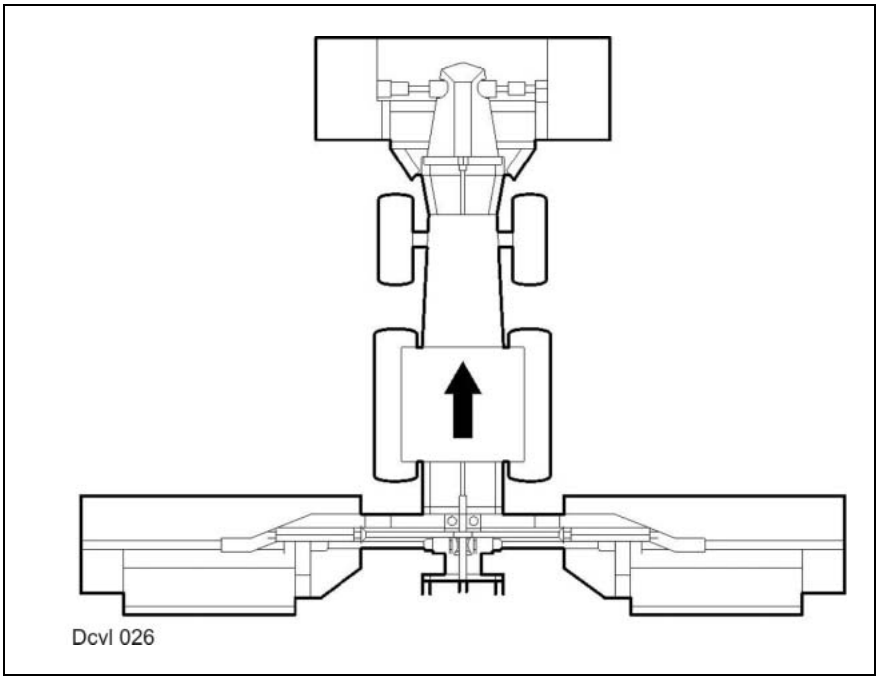


Front mower unit: Standard Disco 3000FC
Side-mounted mower units: Identical with Disco 300C except for the frame, the drive and the feed drum.

https://truckmanualshub.com/

https://truckmanualshub.com/


**1.0 CORTO 8100F ..... 2**

1.1 CORTO 8100F hydraulic system ..... 2
1.1.1 Key to diagram ..... 2
1.1.2 Function CORTO 8100 F ..... 4

1.2 CORTO 8100 F electric system ..... 6
1.2.1 Putting into operation ..... 6
1.2.2 Switching on the right-hand drive ..... 6
1.2.3 Shutting down the right-hand drive ..... 6
1.2.4 Switching on the left-hand drive ..... 6
1.2.5 Shutting down the left-hand drive ..... 6
1.2.6 Raising the left CORTO ..... 6
1.2.7 Lowering the left CORTO ..... 8
1.2.8 Raising the right CORTO ..... 8
1.2.9 Lowering the right CORTO ..... 8
1.2.10 Folding CORTO to working position ..... 8
1.2.11 Folding CORTO to transport position ..... 8
1.2.12 Accumulator is blocked when raising the entire mower unit ..... 8

**2.0 CORTO 8100 T ..... 10**

2.1 Hydraulic System CORTO 8100 T ..... 10
2.1.1 Key to diagram ..... 10
2.1.2 Function ..... 12

2.2 Electric System CORTO 8100 T ..... 14
2.2.1 Key to diagram ..... 14
2.2.1 Function ..... 14

https://truckmanualshub.com/


# 1.0 CORTO 8100F

## 1.1 CORTO 8100F hydraulic system

### 1.1.1 Key to diagram

| | |
|---|---|
| 2 | Hydraulic pump (Jaguar) |
| 5 | Return line oil filter (Jaguar) |
| 50 | 4/3 way valve, double-acting (for front attachments = series equipment) |
| 70 | 2/2 way valve, right-hand drive On/Off |
| 71 | 2/2 way valve, left-hand drive On/Off |
| 72 | 2/2 way valve, fold CORTO in/out |
| 73 | 2/2 way valve, fold CORTO in/out |
| 74 | 2/2 way valve, raise/lower centre mower unit |
| 75 | 2/2 way valve, raise/lower left mower unit |
| 76 | 2/2 way valve, raise/lower right mower unit |
| 77 | CORTO right hydraulic cylinder, drive On/Off |
| 78 | CORTO left hydraulic cylinder, drive On/Off |
| 79 | 80 bar oil pressure switch |
| 80 | 100 bar pressure relief valve, double-acting |
| 81 | Non-return valve, left |
| 82 | Hydraulic cylinder, left CORTO, starting protection |
| 83 | Pressure relief valve 180 bar |
| 84 | Non-return valve, right |
| 85 | Hydraulic cylinder, right CORTO, starting protection |
| 86 | Pressure relief valve 180 bar |
| 87 | Pressure gauge, CORTO right-hand load relief |
| 88 | Accumulator, right-hand, pre-loaded to 210 bar |
| 89 | Lock-up valve unit on right side, electro-magnetic control (open when deenergized) |
| 90 | Hydraulic cylinder, raise and/or load relief of right CORTO |
| 91 | Hydraulic cylinder, fold left CORTO in and out |
| 92 | Hydraulic cylinder, fold right CORTO in and out |
| 93 | 160 bar oil pressure switch |
| 94 | 30 bar oil pressure switch |
| 95 | Centre mower unit raise/lower hydraulic cylinder |
| 97 | Pressure gauge, CORTO left-hand load relief |
| 98 | Accumulator, left-hand, pre-loaded to 210 bar |
| 99 | Lock-up valve unit on left side, electro-magnetic control (open when deenergized) |
| 100 | Hydraulic cylinder, raise and/or load relief of left CORTO |

https://truckmanualshub.com/


CORTO 8100 F

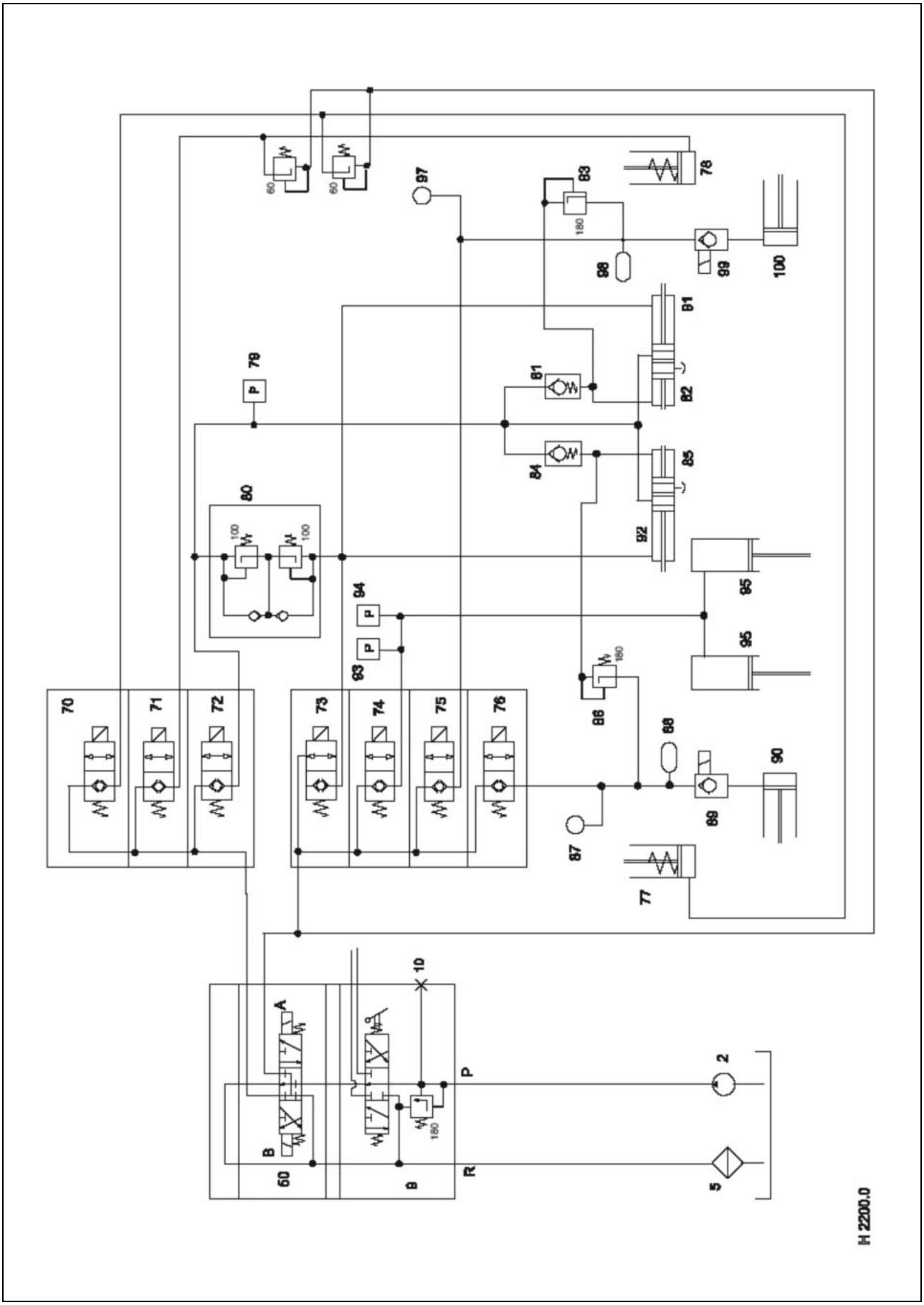

https://truckmanualshub.com/


**1.1.2 Function CORTO 8100 F**

Moving the mower units to transport position

1 Shut down the side-mounted mower units using switches (2) and (3). Shut down the main drive The mower drums must stand still. (Solenoid valves 70 and 71 switch).

2 Raise front attachment completely until the mower units are clear of the ground.

3 Slightly raise the side-mounted mower units using switches (5) and (6). (Solenoid valves 50A, 75 and 76 switch).

4 Actuate the fold-in switch (4). The solenoid valves (50A) and (74) switch. Oil flows to the hydraulic cylinders (95). The centre mower unit is raised. Oil pressure switch (94) closes at 30 bar. The lock-up valve units (89 and 99) are closed by electro-magnetic means. The oil in the hydraulic cylinders (90 and 100) is thus locked.
At a pressure of 160 bar, the oil pressure switch (93) actuates the solenoid valves (72 and 73). Oil flows to the hydraulic cylinders (91 and 92). The hydraulic cylinders retract.
Consequently the side-mounted mower units are folded to the front, i.e. to transport position. The displaced oil flows back to the tank via the solenoid valves (72 and 50B).

5 Fit the transport lock (lighting bracket) and connect the lighting system.

6 Fully raise the side-mounted mower units using switches (5) and (6). The solenoid valves 50 A, 75 and 76 switch.
Oil flows to the hydraulic cylinders (82 and 85). At 80 bar, the oil pressure switch (79) and the solenoid valve (74) switch.
The oil in the hydraulic cylinders (95) flows back to the tank.
The centre mower unit is lowered onto the folded-in side-mounted mower units.

Remark: The double-acting pressure relief valve (80) serves for accident prevention.
When folding in, the mower units can be stopped manually.
The pressure relief valve (80) opens at 100 bar. Personal injury is thus avoided. The oil displaced by pressure relief valve (80) flows back to the tank.

https://truckmanualshub.com/


CORTO 8100 F

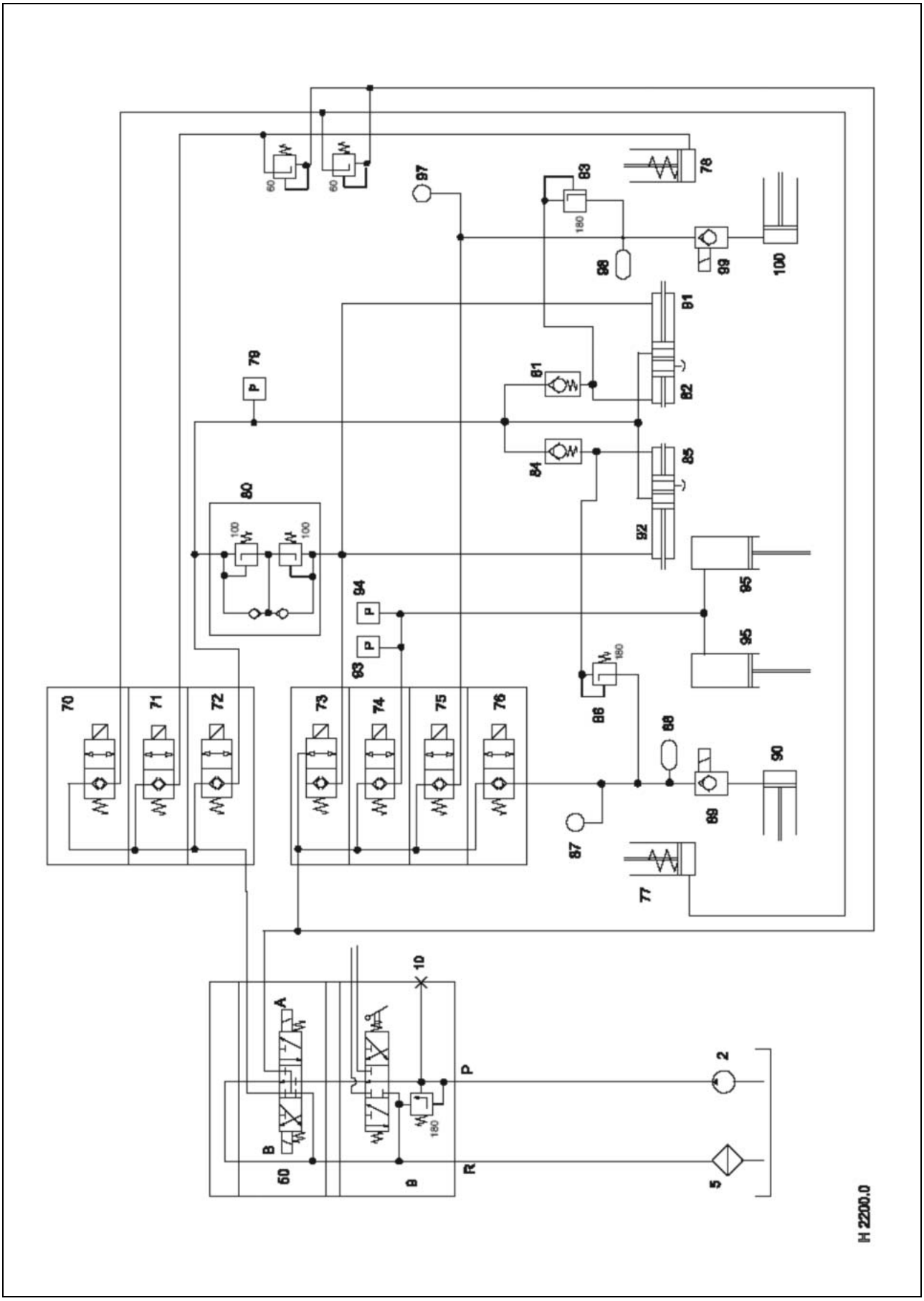

https://truckmanualshub.com/


## 1.2 CORTO 8100 F electric system

### 1.2.1 Putting into operation

Switch on stop switch 1. Current is applied to the relays, terminal 86 and the solenoid valves.

### 1.2.2 Switching on the right-hand drive

Actuate rocker switch 3.
Earth is connected to relay 17 on terminal 85 and to solenoid valve 70.
Relay 17 connects earth to relay 15 and to the 4/3 way solenoid valve 50B.
Relay 15 cuts the current supply to the lock-up valve units 89 and 99.
Via the 2/2 way solenoid valve and the 4/3 way solenoid valve, oil flows into hydraulic cylinder 77. The right-hand drive is now switched on.

### 1.2.3 Shutting down the right-hand drive

Actuate rocker switch 3.
Earth is connected to relay 16 on terminal 85 and to solenoid valve 70.
Relay 16 connects earth to relay 15 and to the 4/3 way solenoid valve 50A.
Relay 15 cuts the current supply to the lock-up valve units 89 and 99.
Via the 2/2 way solenoid valve and the 4/3 way solenoid valve, oil flows out of hydraulic cylinder 77 – the drive has been shut down.

### 1.2.4 Switching on the left-hand drive

Actuate rocker switch 2.
Earth is connected to relay 17 on terminal 85 and to solenoid valve 71.
Relay 17 connects earth to relay 15 and to the 4/3 way solenoid valve 50B.
Relay 15 cuts the current supply to the lock-up valve units 89 and 99. Via the 2/2 way solenoid valve and the 4/3 way solenoid valve, oil flows into the hydraulic cylinders 78 – the drive is now switched on.

### 1.2.5 Shutting down the left-hand drive

Actuate rocker switch 2.
Earth is also connected to relay 16 on terminal 85 and to solenoid valve 71.
Relay 16 connects earth to relay 15 and to the 4/3 way solenoid valve 50A.
Relay 15 cuts the current supply to the lock-up valve units 89 and 99. Via the 2/2 way solenoid valve and the 4/3 way solenoid valve, oil flows out of hydraulic cylinder 78 – the drive is shut down.

### 1.2.6 Raising the left CORTO

Actuate rocker switch 5.
Earth is connected to relay 17 on terminal 85 and to solenoid valve 75.
Relay 17 connects earth to relay 15 and to the 4/3 way solenoid valve 50B.
Relay 15 cuts the current supply to the lock-up valve units 89 and 99. Via the 2/2 way solenoid valve and the 4/3 way solenoid valve, oil flows into hydraulic cylinder 100 – the left mower unit is raised.

https://truckmanualshub.com/


CORTO 8100 F

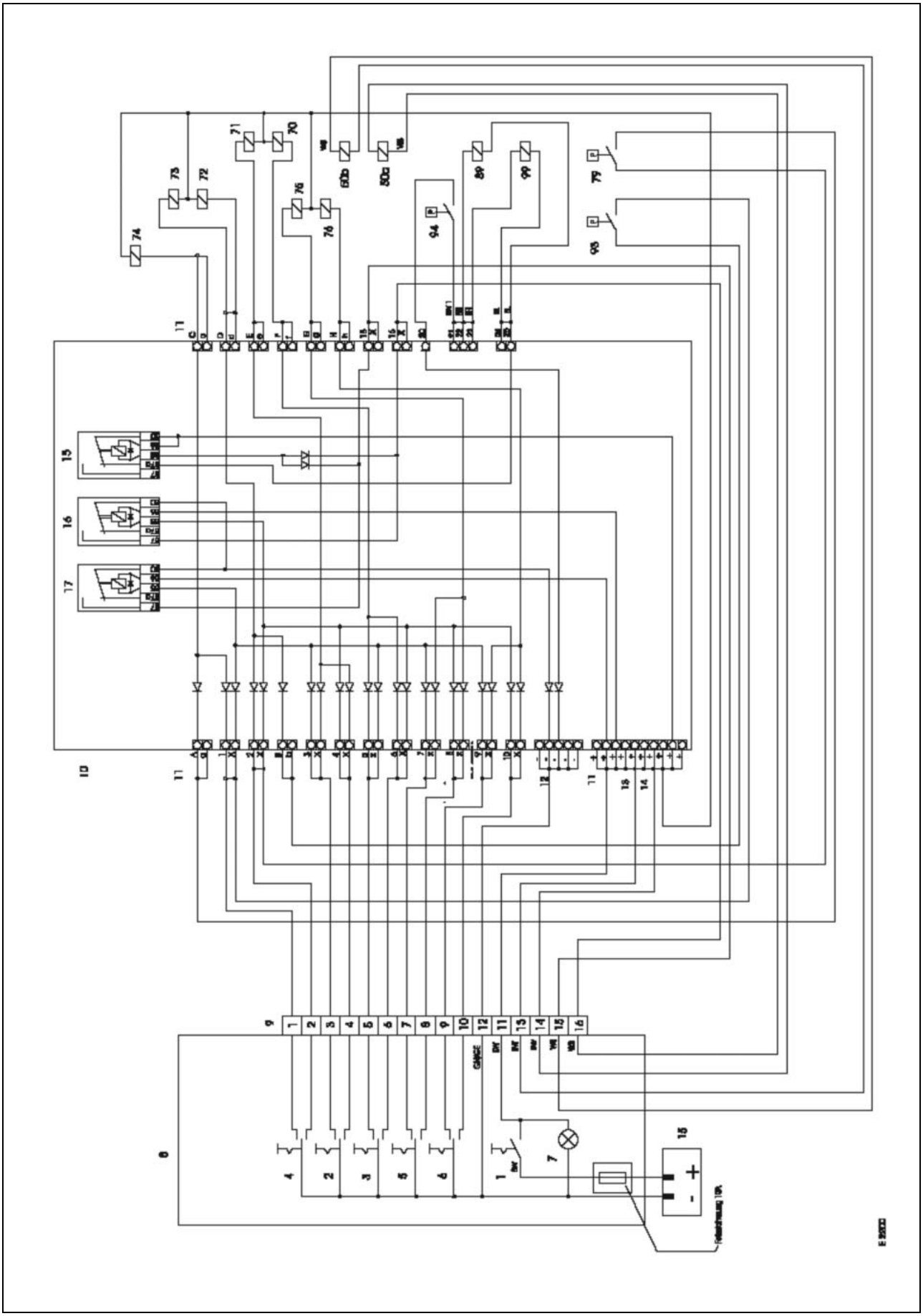

https://truckmanualshub.com/


**1.2.7 Lowering the left CORTO**

Actuate rocker switch 5.
Earth is connected to relay 16 on terminal 85 and to solenoid valve 75.
Relay 16 connects earth to relay 15 and to the 4/3 way solenoid valve 50A.
Relay 15 cuts the current supply to the lock-up valve units 89 and 99. Via the 2/2 way solenoid valve and the 4/3 way solenoid valve, oil flows out of hydraulic cylinder 100 – the left mower unit is lowered.

**1.2.8 Raising the right CORTO**

Actuate rocker switch 6.
Earth is also connected to relay 17 on terminal 85 and to solenoid valve 76.
Relay 17 connects earth to relay 15 and to the 4/3 way solenoid valve 50B.
Relay 15 cuts the current supply to the lock-up valve units 89 and 99.
Via the 2/2 way solenoid valve and the 4/3 way solenoid valve, oil flows into hydraulic cylinder 90 – the right mower unit is raised.

**1.2.9 Lowering the right CORTO**

Actuate rocker switch 6.
Earth is connected to relay 16 on terminal 85 and to solenoid valve 76.
Relay 16 connects earth to relay 15 and to the 4/3 way solenoid valve 50A.
Relay 15 cuts the current supply to the lock-up valve units 89 and 99.
Via the 2/2 way solenoid valve and the 4/3 way solenoid valve, oil flows out of hydraulic cylinder 90 – the right mower unit is lowered.

**1.2.10 Folding CORTO to working position**

Actuate rocker switch 4.
Earth is connected to relay 16 on terminal 85 and to solenoid valves 72 and 73.
Relay 16 connects earth to relay 15 and to the 4/3 way solenoid valve 50A.
Relay 15 cuts the current supply to the lock-up valve units 89 and 99. Via the 2/2 way solenoid valve and the 4/3 way solenoid valve, oil flows into the hydraulic cylinders 82, 85, 91 und 92 – the side-mounted mower units are folded out.
Upon reaching the end position or 80 bar, the oil pressure switch 79 connects earth to the solenoid valve 74. Via the 2/2 way solenoid valve and the 4/3 way solenoid valve, oil flows into hydraulic cylinders 95.
The centre mower unit is lowered.

**1.2.11 Folding CORTO to transport position**

Actuate rocker switch 4.
Earth is also connected to relay 17 on terminal 85 and to solenoid valve 74.
Relay 17 connects earth to relay 15 and to the 4/3 way solenoid valve 50B.
Relay 15 cuts the current supply to the lock-up valve units 89 and 99. Via the 2/2 way solenoid valve and the 4/3 way solenoid valve, oil flows into hydraulic cylinders 95 – the centre mower unit is raised.

Upon reaching the end position or 160 bar, the oil pressure switch 93 connects earth to the solenoid valves 72 and 73. The 2/2 way solenoid valves make the side-mounted mower units fold in.

**1.2.12 Accumulator is blocked when raising the entire mower unit**

When raising the complete mower unit, the load from the centre mower unit on hydraulic cylinder 95 connects earth from oil pressure switch 94 to the lock-up valve units 89 and 99.

https://truckmanualshub.com/


CORTO 8100 F

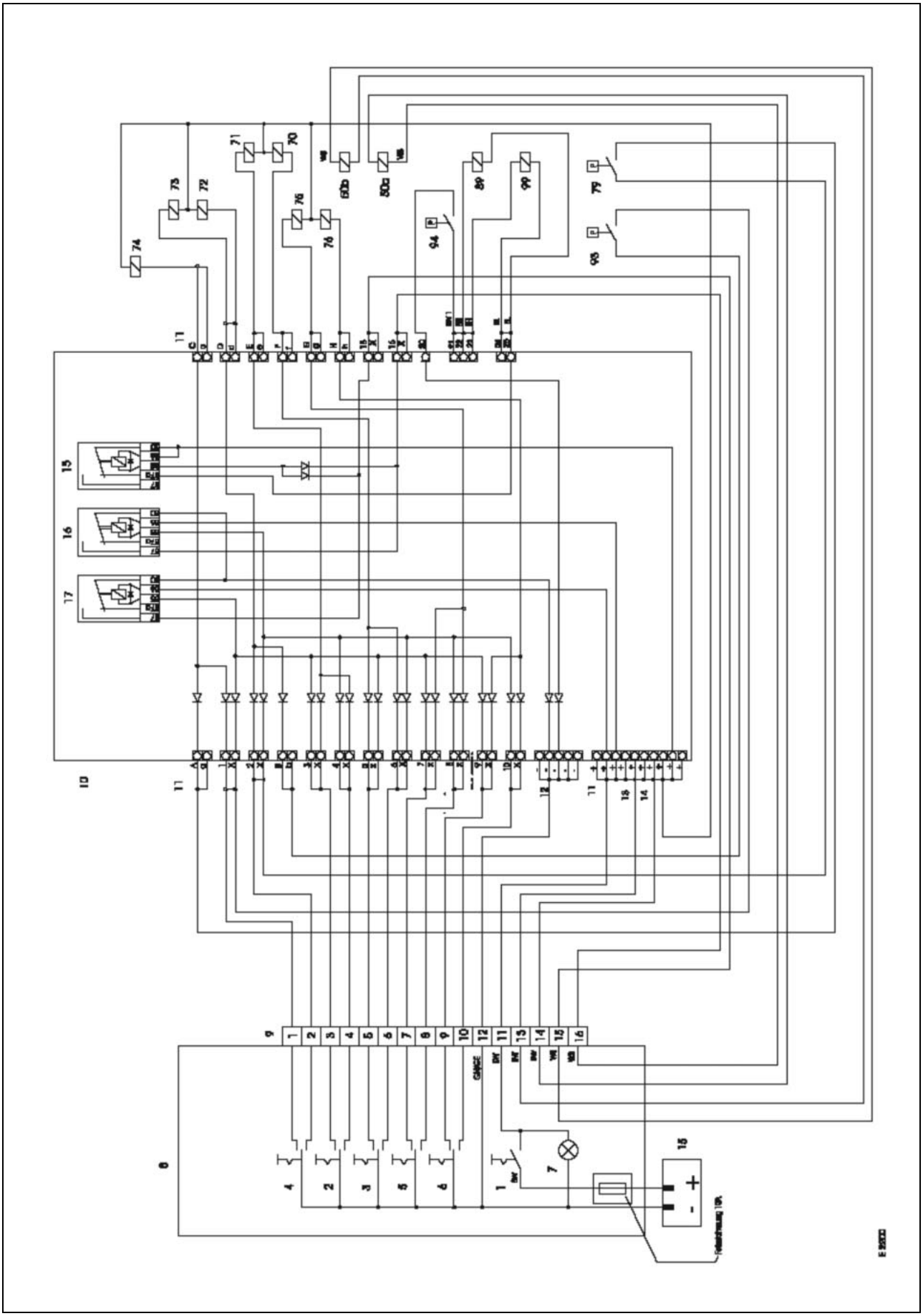

https://truckmanualshub.com/


# 2.0 CORTO 8100 T

## 2.1 Hydraulic System CORTO 8100 T

### 2.1.1 Key to diagram

| | |
|---|---|
| 2 | Tractor hydraulic system pump |
| 5 | Tractor return line oil filter |
| 50 | 4/3 way valve, double-acting tractor control unit |
| 70 | 3/3 way valve, single-acting tractor control unit |
| 72 | Pressure relief valve 60 bar, left CORTO drive On/Off |
| 73 | Pressure relief valve 60 bar, right CORTO drive On/Off |
| 74 | Oil accumulator for Contour device |
| 77 | Right CORTO hydraulic cylinder, drive On/Off |
| 78 | Left CORTO hydraulic cylinder, drive On/Off |
| 79 | 80 bar oil pressure switch |
| 80 | 100 bar pressure relief valve, double-acting |
| 81 | Non-return valve, left |
| 82 | Hydraulic cylinder, left CORTO, starting protection |
| 83 | Pressure relief valve 180 bar |
| 84 | Non-return valve, right |
| 85 | Hydraulic cylinder, right CORTO, starting protection |
| 86 | Pressure relief valve 180 bar |
| 87 | Pressure gauge, CORTO right-hand load relief |
| 88 | Accumulator, right-hand, pre-loaded to 210 bar |
| 89 | Lock-up valve unit on right side, electro-magnetic control (open when deenergized) |
| 90 | Hydraulic cylinder, raise and/or load relief of right CORTO |
| 91 | Hydraulic cylinder, fold left CORTO in and out |
| 92 | Hydraulic cylinder, fold right CORTO in and out |
| 93 | 160 bar oil pressure switch |
| 94 | 30 bar oil pressure switch |
| 95 | Centre mower unit raise/lower hydraulic cylinder |
| 96 | Lock-up valve unit on left side, electro-magnetic control (open when deenergized) |
| 97 | Pressure gauge, CORTO left-hand load relief |
| 98 | Accumulator, left-hand, pre-loaded to 210 bar |
| 99 | Lock-up valve unit, oil flow from B to A is possible when deenergized. |
| 100 | Hydraulic cylinder, raise and/or load relief of left CORTO |
| 101 | Lock-up valve unit, oil flow from B to A is possible when deenergized. |
| 102 | Right lock-up valve unit, drive On/Off |
| 103 | Left lock-up valve unit, drive On/Off |

https://truckmanualshub.com/


CORTO 8100 T

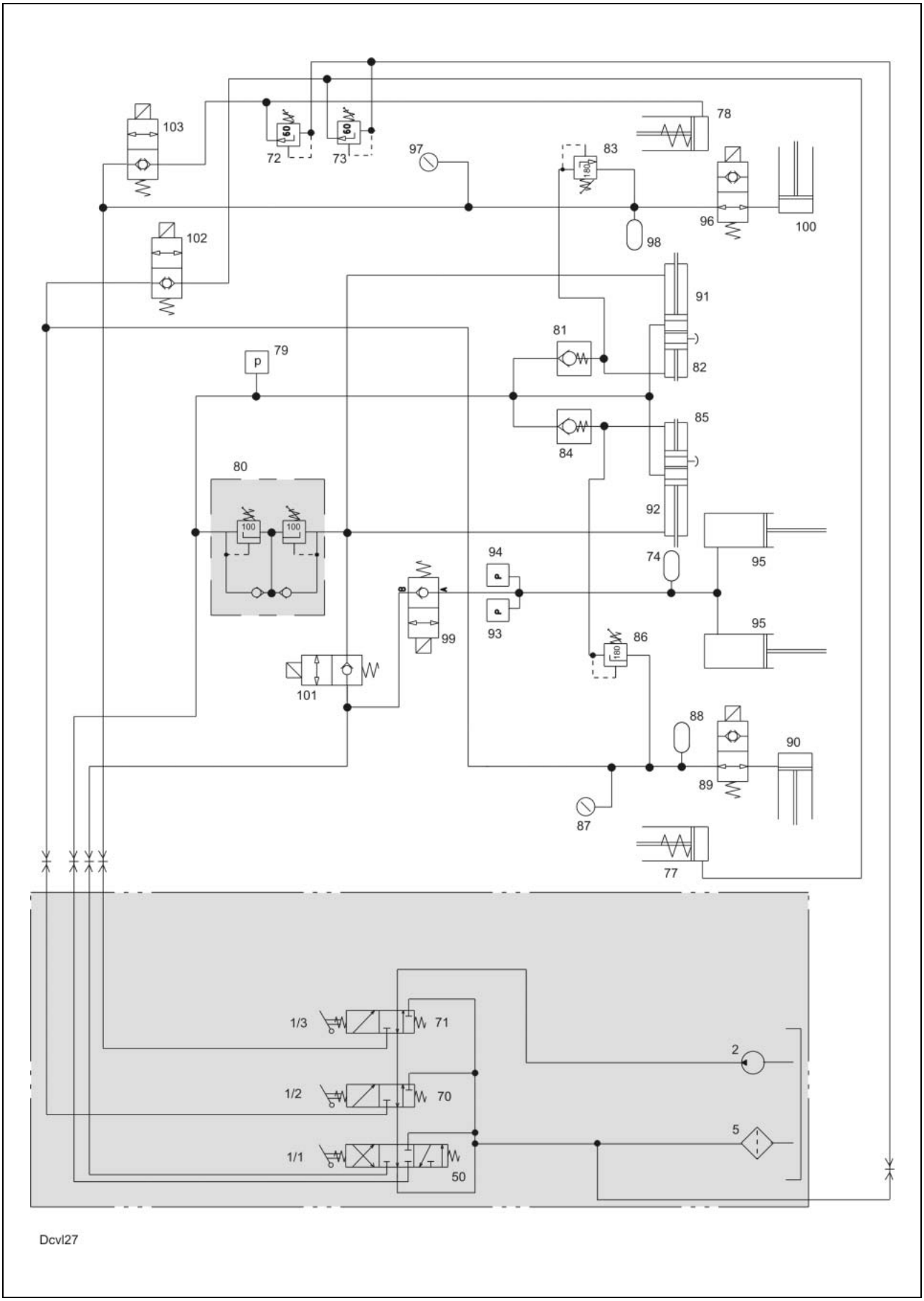

https://truckmanualshub.com/


### 2.1.2 Function

| | |
|---|---|
| Putting into operation | Switch on stop switch 1. Current is applied to relays 5, 6, and 7, terminals 30 and 86. |
| Switching on/Shutting down the right-hand drive | Actuate rocker switch 3. Solenoid valve 102 is energized.<br>Lock-up valve unit 102 is opened and oil can flow into cylinder 77 upon actuation of the tractor hydraulics and switch on the drive.<br>The adjustable pressure relief valve 72 opens at 60 bar. |
| Switching on/Shutting down the left-hand drive | Actuate rocker switch 2. Solenoid valve 103 is energized.<br>Lock-up valve unit 103 is opened and oil can flow into cylinder 78 upon actuation of the tractor hydraulics and switch on the drive.<br>The adjustable pressure relief valve 72 opens at 60 bar. |
| Folding the machine to working position | Actuate the double-acting additional control unit on the tractor.<br>Oil flows into hydraulic cylinders 82, 85, 91 and 92.<br>Upon reaching the end position or 80 bar, the oil pressure switch 79 connects earth to relay 6.<br>Relay 6 connects the current supply to coil 99. Lock-up valve unit 99 is opened and the front mower unit is lowered. |
| Folding the machine to transport position | Actuate the double-acting additional control unit on the tractor.<br>Oil flows to hydraulic cylinders 95.<br>Upon reaching the end position or 160 bar, the oil pressure switch 93 connects earth to relay 7.<br>Relay 7 connects the current supply to coil 101.<br>Lock-up valve unit 101 is opened and oil flows into the hydraulic cylinders 91 and 92. The side-mounted mower unit are folded in. |
| The oil accumulator is shut off while the three-point hitch is raised | By raising the entire mower unit, using the tractor hydraulics, the oil pressure switch (94) is actuated due to the load by the front mower unit on the Hydraulic cylinders.<br>Relay (5) connects the current supply to coil (89) and (96). This blocks the oil flow to the oil pressure reservoir (88) and (89.) |

https://truckmanualshub.com/


CORTO 8100 T

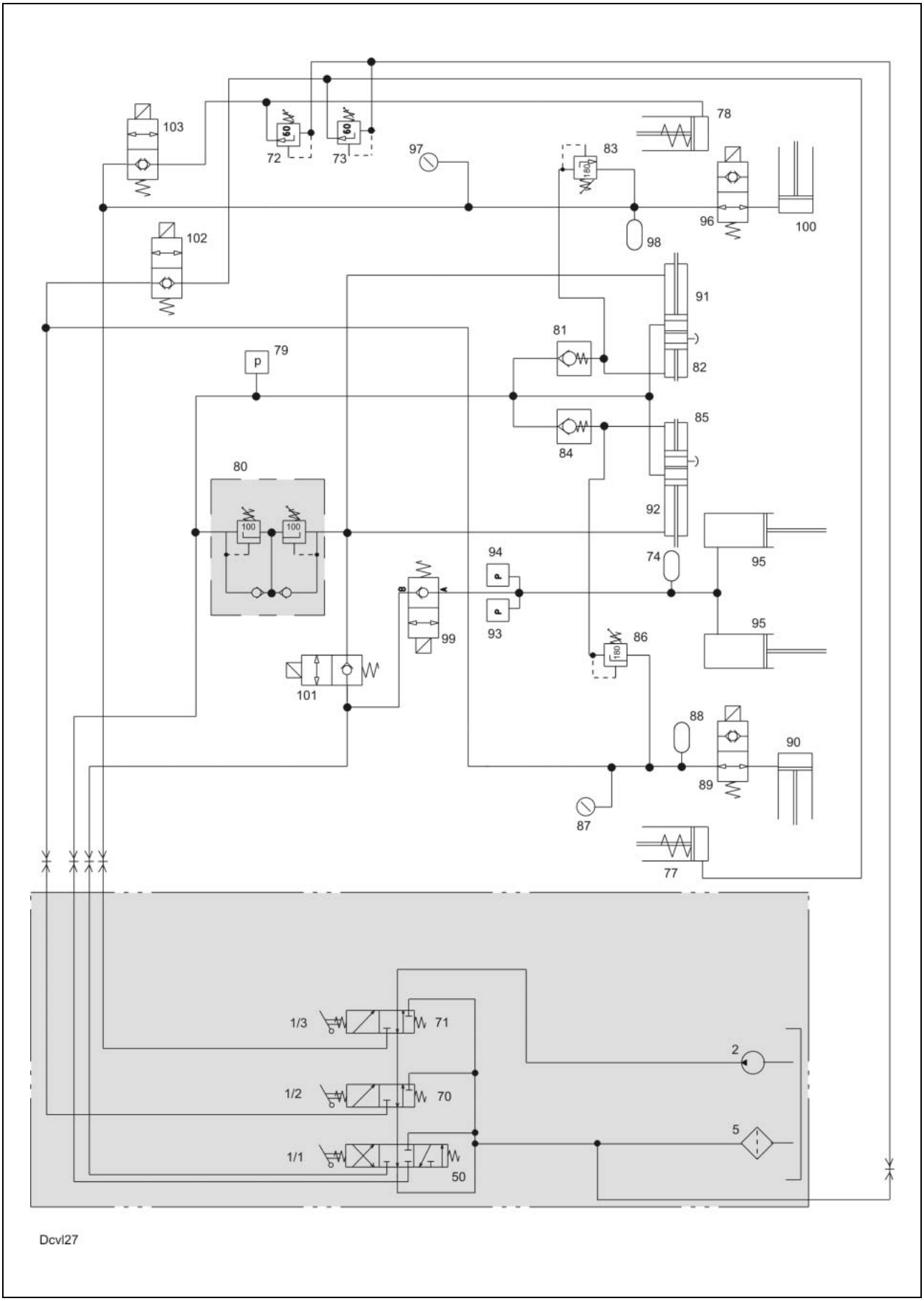

https://truckmanualshub.com/


## 2.2 Electric System CORTO 8100 T

### 2.2.1 Key to diagram

| | |
|---|---|
| 1 | Stop switch in control terminal |
| 2 | Left CORTO push switch, drive On/Off |
| 3 | Right CORTO push switch, drive On/Off |
| 4 | Indicator light in stop switch |
| 5 | Relay (switches coils 89 and 96) |
| 6 | Relay (switches coil 99) |
| 7 | Relay (switches coil 101) |
| 8 | Earth point |
| 79 | Oil pressure switch 80 bar (switches relay 6) |
| 89 | Coil - lock-up valve unit – right side-mounted mower unit |
| 93 | Oil pressure switch 160 bar (switches relay 7) |
| 94 | Oil pressure switch 30 bar (switches relay 5) |
| 96 | Coil - lock-up valve unit – left side-mounted mower unit |
| 99 | Coil – lower centre mower unit |
| 101 | Coil - side-mounted mower units to transport position |
| 102 | Coil – right-hand drive On/Off |
| 103 | Coil – left-hand drive On/Off |

### 2.2.1 Function

| | |
|---|---|
| Putting into operation | Switch on stop switch 1.<br>Current is applied to relays 5, 6, and 7, terminals 30 and 86. |
| Switching on/Shutting down the right-hand drive | Actuate rocker switch 3. Solenoid valve 102 is energized.<br>Lock-up valve unit 102 is opened and oil can flow into cylinder 77 upon actuation of the tractor hydraulics and switch on the drive.<br>The adjustable pressure relief valve 72 opens at 60 bar. |
| Switching on/Shutting down the left-hand drive | Actuate rocker switch 2. Solenoid valve 103 is energized.<br>Lock-up valve unit 103 is opened and oil can flow into cylinder 78 upon actuation of the tractor hydraulics and switch on the drive.<br>The adjustable pressure relief valve 72 opens at 60 bar. |
| Folding the machine to working position | Actuate the double-acting additional control unit on the tractor.<br>Oil flows into hydraulic cylinders 82, 85, 91 and 92.<br>Upon reaching the end position or 80 bar, the oil pressure switch 79 connects earth to relay 6.<br>Relay 6 connects the current supply to coil 99. Lock-up valve unit 99 is opened and the front mower unit is lowered. |
| Folding the machine to transport position | Actuate the double-acting additional control unit on the tractor.<br>Oil flows to hydraulic cylinders 95.<br>Upon reaching the end position or 160 bar, the oil pressure switch 93 connects earth to relay 7.<br>Relay 7 connects the current supply to coil 101.<br>Lock-up valve unit 101 is opened and oil flows into the hydraulic cylinders 91 and 92. The side-mounted mower unit are folded in. |
| The oil accumulator is shut off while the three-point hitch is raised | By raising the entire mower unit, using the tractor hydraulics, the oil pressure switch (94) is actuated due to the load by the front mower unit on the Hydraulic cylinders.<br>Relay (5) connects the current supply to coil (89) and (96). This blocks the oil flow to the oil pressure reservoir (88) and (89.) |

https://truckmanualshub.com/


CORTO 8100 T

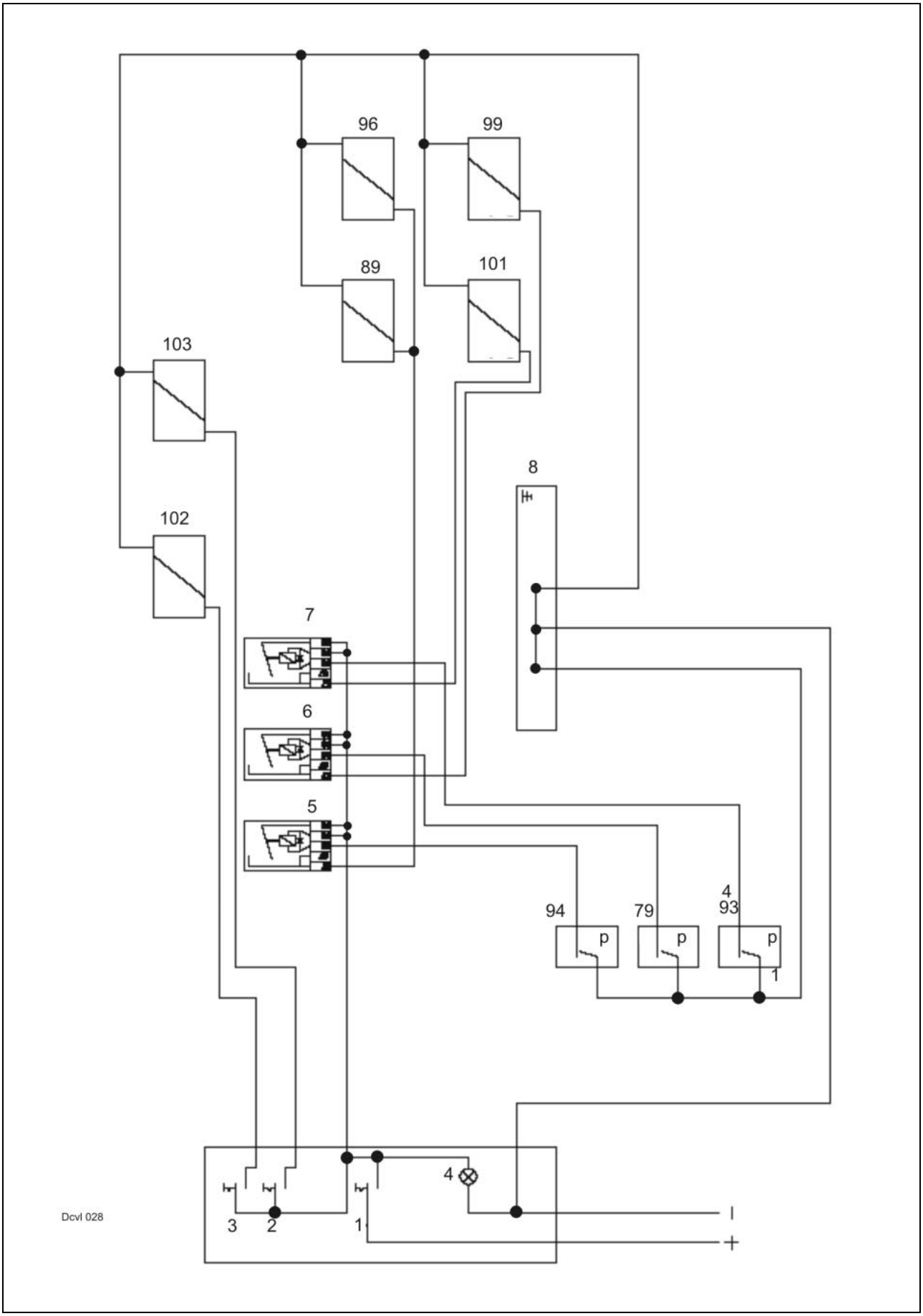

https://truckmanualshub.com/

https://truckmanualshub.com/


**1.0 LINER 3000 ..... 2**

1.1 Hydraulic System ..... 2
1.1.1 Hydraulic circuit diagram ..... 2
1.1.2 Function - valve assignment ..... 2
1.1.3 Valve block 21 ..... 4
1.1.4 Valve block 22 ..... 6
1.1.5 Location of components ..... 8

1.2 Electric System LINER 3000 ..... 10
1.2.1 Electric circuit diagram ..... 10

1.3 CCT LINER 3000 ..... 12
1.3.1 Manual control ..... 14
1.3.2 Emergency program ..... 16
1.3.3 Setting the rotor raise height ..... 18
1.3.4 Working with the rear rotors only ..... 20
1.3.5 Raising the front rotors separately ..... 20
1.3.6 Setting the sequential control on the turning area ..... 22

1.4 Learning the limit stops (setting of basic values) ..... 24
1.4.1 Execution ..... 24

1.5 Checking in case of malfunctions ..... 26

1.6 Installing the angle transmitters ..... 27
1.6.1 Front angle transmitter ..... 27
1.6.2 Rear angle transmitter ..... 27
1.6.3 Adjustment of angle transmitters ..... 28
1.6.4 Checking the signal voltages ..... 28
1.6.5 Diagnosis of angle transmitter ..... 29

1.7 Compressed-air brake system ..... 30

**2.0 LINER 1550 Twin Profile ..... 32**

2.1 Hydraulic System ..... 32

**3.0 LINER 650 Twin, LINER 880 ..... 34**

3.1 LINER 650 Twin ..... 34
3.1.1 Hydraulic System ..... 34

3.2 LINER 880 Twin ..... 35
3.2.1 Hydraulic System ..... 35

**4.0 Flow divider for slopes ..... 36**

4.2 LINER 1500/1550 ..... 38

https://truckmanualshub.com/


# 1.0 LINER 3000

## 1.1 Hydraulic System

### 1.1.1 Hydraulic circuit diagram

M 1 Circulation blocking solenoid valve (master valve)
M 2 Lower chassis solenoid valve
M 3 Raise chassis solenoid valve
M 4 Lower front rotors solenoid valve
M 5 Raise front rotors solenoid valve
M 6 Front rotors wider solenoid valve
M 7 Front rotors narrower solenoid valve
M 8 Raise rear rotors solenoid valve
M 9 Lower rear rotors solenoid valve
M 10 Lower rear rotors solenoid valve

11 Two-way flow divider
12 Raise/lower chassis hydraulic cylinder
13 Raise/lower front rotors hydraulic cylinder
14 Swath width front narrower/wider hydraulic cylinder
15 Raise/lower rear rotors hydraulic cylinder
16 Quick release coupling on tractor P (pressure)
17 Quick release coupling on tractor T (pressureless return line)
19 Lock-up valve unit
20 One-way restrictor valve (drop rate restrictor)
21 Valve block, complete
22 Valve block, complete
23 Shut-off tap
24 High-pressure filter

X John Deere screw (constant-pressure hydraulic system) via screw on the solenoid.

### 1.1.2 Function - valve assignment

| Function | Valve |
|---|---|
| Raise front rotors | 1 + 5 |
| Lower front rotors | 1 + 4 |
| Raise rear rotors | 1+ 8 |
| Lower rear rotors | 1+ 9 + 10 |
| Raise chassis | 1 + 3 |
| Lower chassis | 1 + 2 |
| Increase working width | 1 + 6 |
| Decrease working width | 1 + 7 |

https://truckmanualshub.com/



LINER 3000

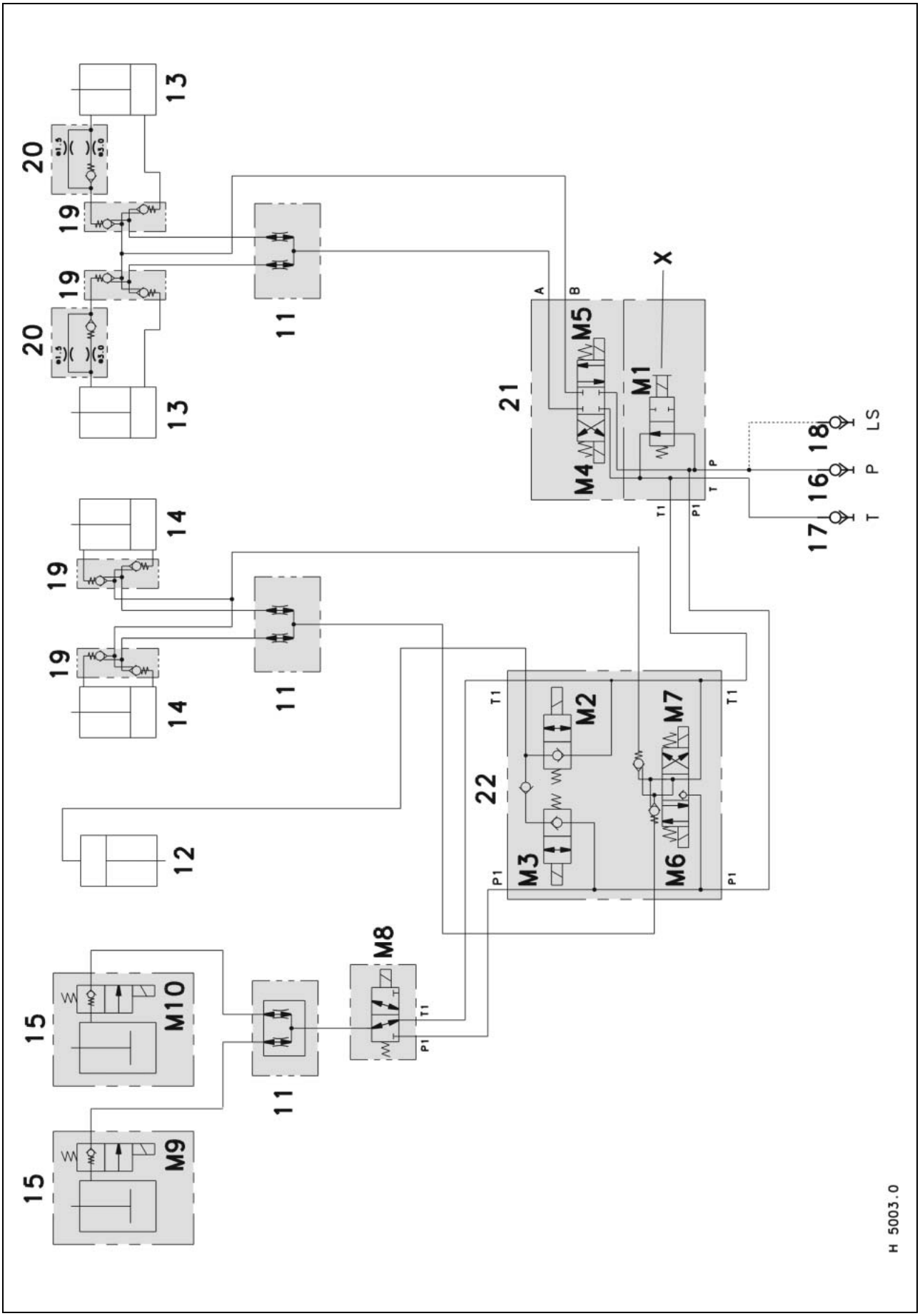

https://truckmanualshub.com/


### 1.1.3 Valve block 21

| | | |
|---|---|---|
| Key to diagram | M1 | Circulation blocking solenoid valve (master valve) |
| | M4 | Lower front rotors solenoid valve |
| | M5 | Raise front rotors solenoid valve |
| | X | John Deere screw (constant-pressure hydraulic system) |

https://truckmanualshub.com/


Valve block 21: master valve, raise/lower front rotors

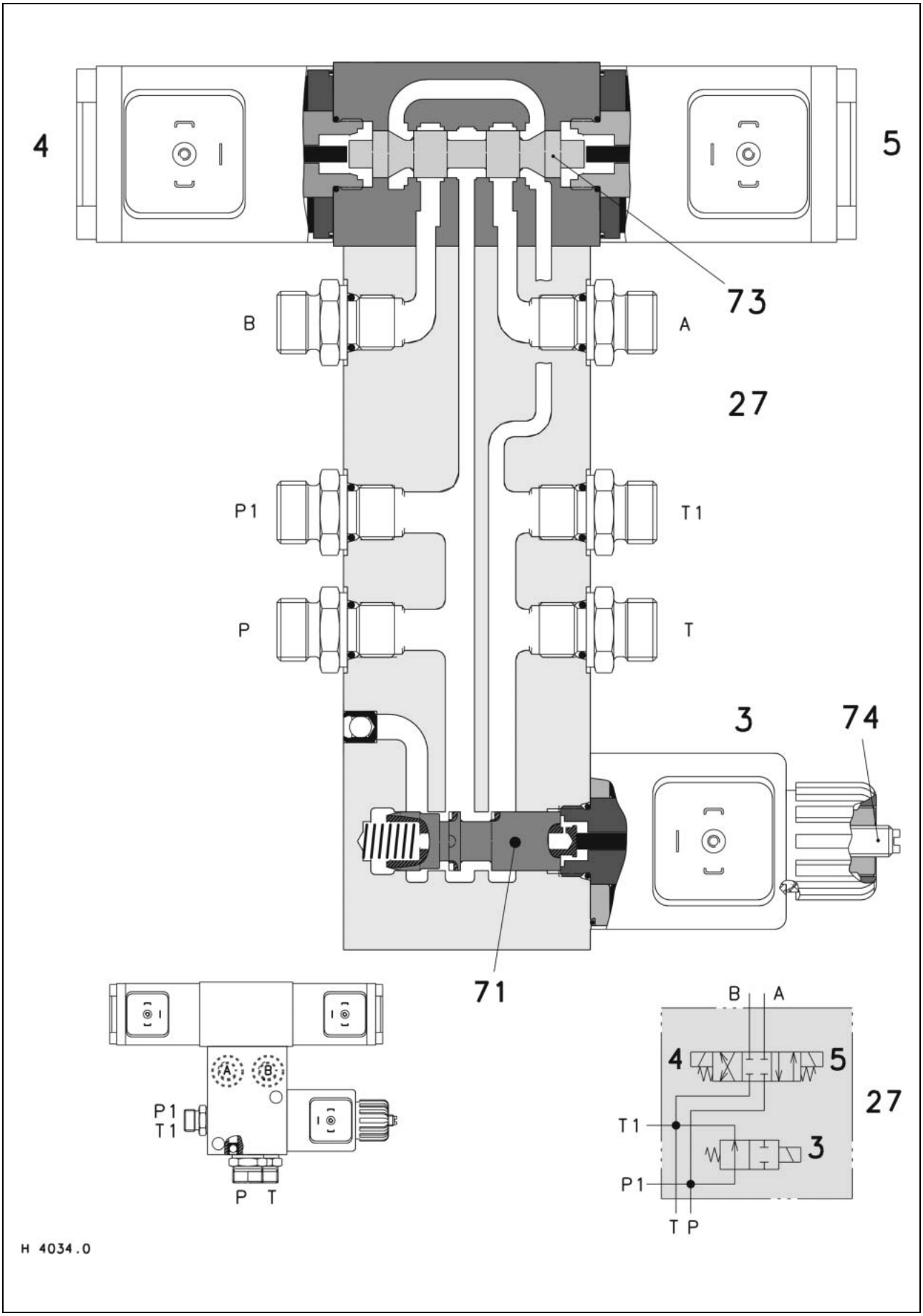

https://truckmanualshub.com/


### 1.1.4 Valve block 22

| | | |
|---|---|---|
| Key to diagram | M2 | Lower chassis solenoid valve |
| | M3 | Raise chassis solenoid valve |
| | M6 | Front rotors wider solenoid valve |
| | M7 | Front rotors narrower solenoid valve |

https://truckmanualshub.com/


Valve block 22

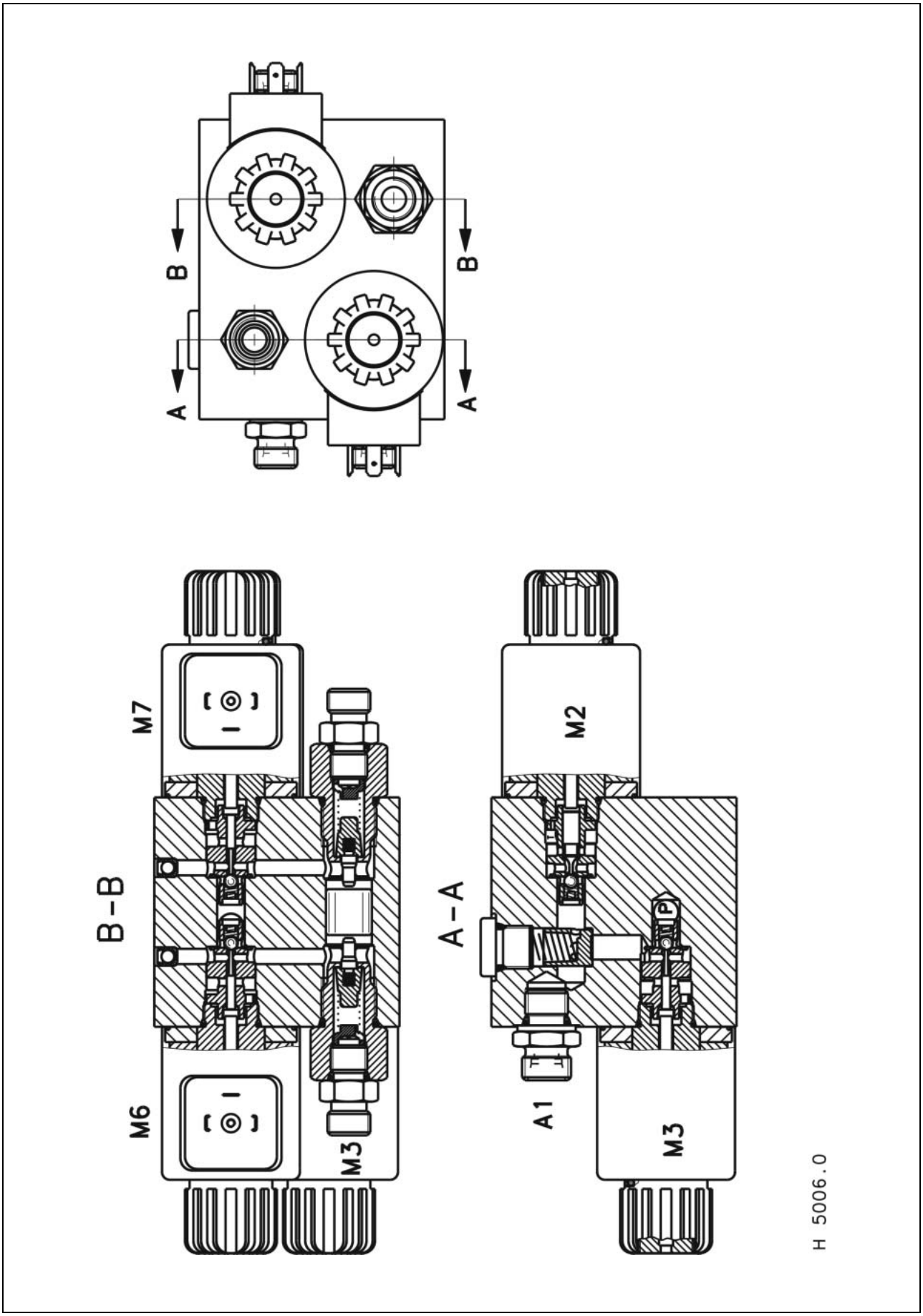

https://truckmanualshub.com/


### 1.1.5 Location of components

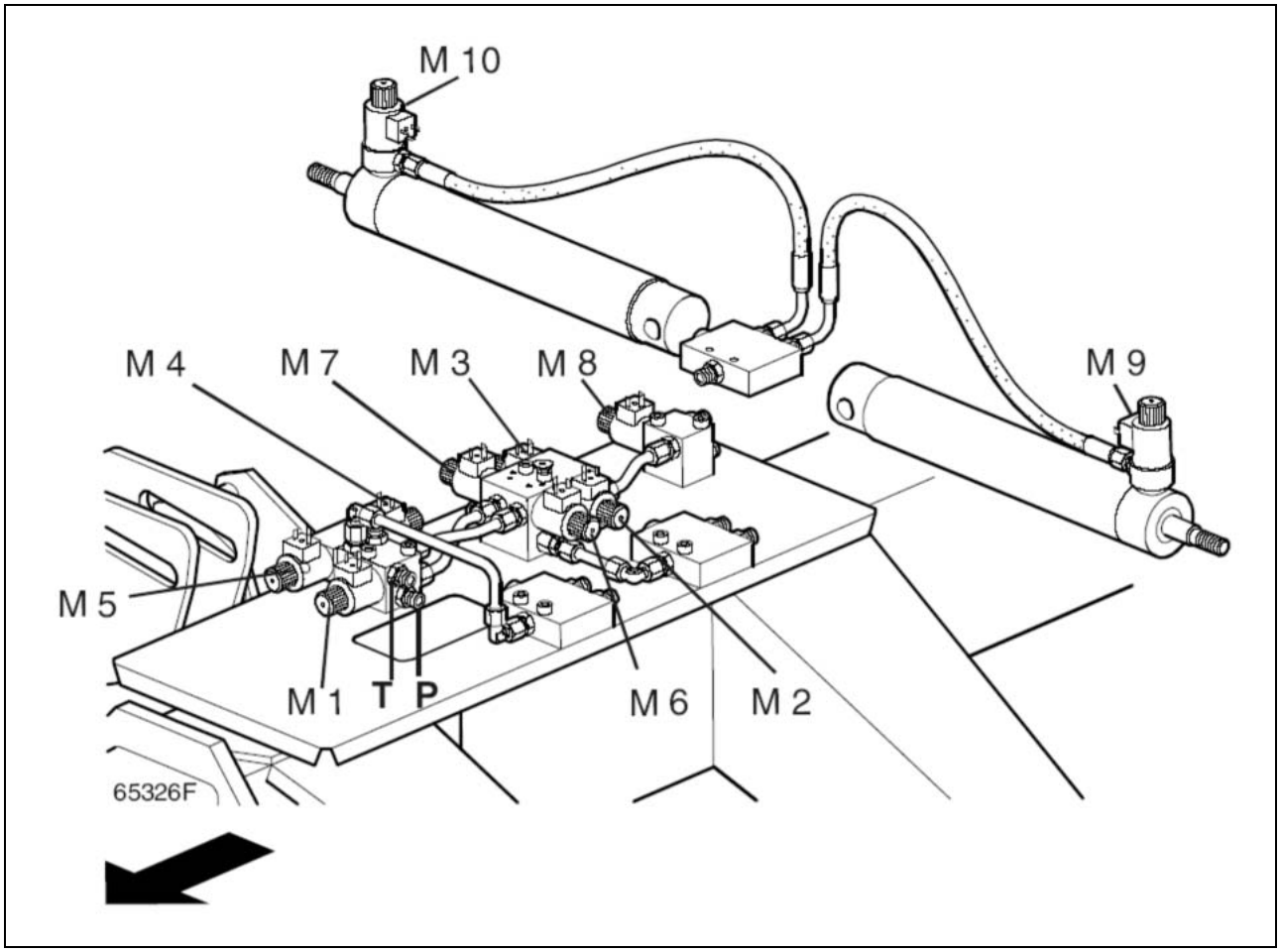


Key to diagram

| | |
|---|---|
| M1 | Circulation blocking solenoid valve (master valve) |
| M2 | Lower chassis solenoid valve |
| M3 | Raise chassis solenoid valve |
| M4 | Lower front rotors solenoid valve |
| M5 | Raise front rotors solenoid valve |
| M6 | Front rotors wider solenoid valve |
| M7 | Front rotors narrower solenoid valve |
| M8 | Raise rear rotors solenoid valve |
| M9 | Lower rear rotors solenoid valve |
| M10 | Lower rear rotors solenoid valve |
| P | Pump inlet |
| T | Tank line |

Function/valve assignment

| Function | Valve |
|---|---|
| Raise front rotors | 1 + 5 |
| Lower front rotors | 1 + 4 |
| Raise rear rotors | 1+ 8 |
| Lower rear rotors | 1+ 9 + 10 |
| Raise chassis | 1 + 3 |
| Lower chassis | 1 + 2 |
| Increase working width | 1 + 6 |
| Decrease working width | 1 + 7 |

https://truckmanualshub.com/


Valve inserts

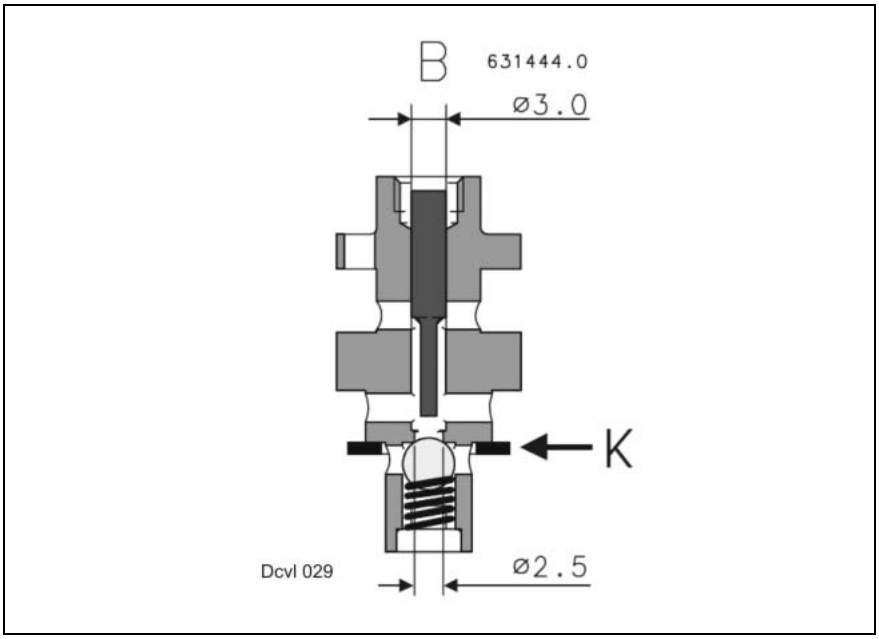


The valve insert part no. 631 444.0 is built into the solenoid valves M3, M6, M7 and M10.

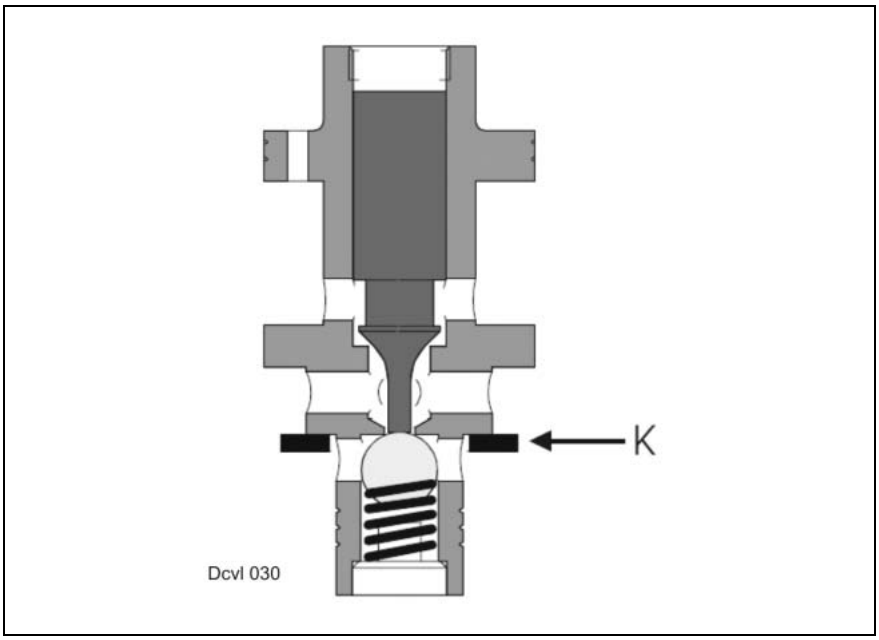


The valve insert part no. 631 520.0 is built into solenoid valve M2.

**Attention** When disassembling or replacing the valve insert, the copper ring 094 001.0 must be replaced.

https://truckmanualshub.com/


## 1.2 Electric System LINER 3000

### 1.2.1 Electric circuit diagram

| | | |
|---|---|---|
| Key to diagram - Inputs | F | 6 A fuse |
| | J 0 | 2-pin connector – on-board power supply from tractor pin 15/30 = +, pin 31 = - |
| | J 1 | 12-pin round connector – on-board power supply |
| | J 2 | 3-pin connector for angular sensor of front rotor |
| | J 3 | 3-pin connector for angular sensor of rear rotor |
| | J 4 | Not used |
| | J 5 | 3-pin connector Reed contact (drive) |
| | J 6 | 15-pin connector CCT - CCU |
| | J10 | 3-pin connector Reed contact (chassis) |
| | DS 1 | Speed sensor (Reed contact) of front drive shaft |
| | FS 1 | Chassis top position sensor (Reed contact) from serial no. |
| | RS 1 | Not used |
| | WS 1 | Front rotor angular sensor |
| | WS 2 | Rear rotor angular sensor |
| Key to diagram - Control terminal | ST | CCT = CLAAS Control Terminal |
| | 1 | Switch - On/Off |
| | 2 | Stop switch |
| | 3 | Working position switch |
| | 4 | Transport position switch |
| | 5 | Swath width front + switch |
| | 6 | Swath width front - switch |
| | 7 | Raise front rotors switch |
| | 8 | Lower front rotors switch |
| | 9 | Turning area switch |
| | 10 | LED (light-emitting diode) |
| Key to diagram - Outputs | M 1 | Circulation blocking solenoid valve (master valve) |
| | M2 | Lower chassis solenoid valve |
| | M3 | Raise chassis solenoid valve |
| | M4 | Lower front rotors solenoid valve |
| | M5 | Raise front rotors solenoid valve |
| | M6 | Swath width front + solenoid valve |
| | M7 | Swath width front - solenoid valve |
| | M8 | Raise rear rotors solenoid valve |
| | M9 | Lower rear rotors solenoid valve |
| | M10 | Lower rear rotors solenoid valve |
| Key to diagram - Software download | J 7 Jxx | 25-pin connector(download)<br>RS 232 cable for PC or CDS (CLAAS Diagnosis System) |
| Key to diagram - Diagnosis | J 8 | 7-pin<br>Diagnosis connector |
| Key to diagram - Electronic control system | CCU J 9 | Claas Control Unit (control module)<br>55-pin connected on CCU |

https://truckmanualshub.com/



LINER 3000 electric system

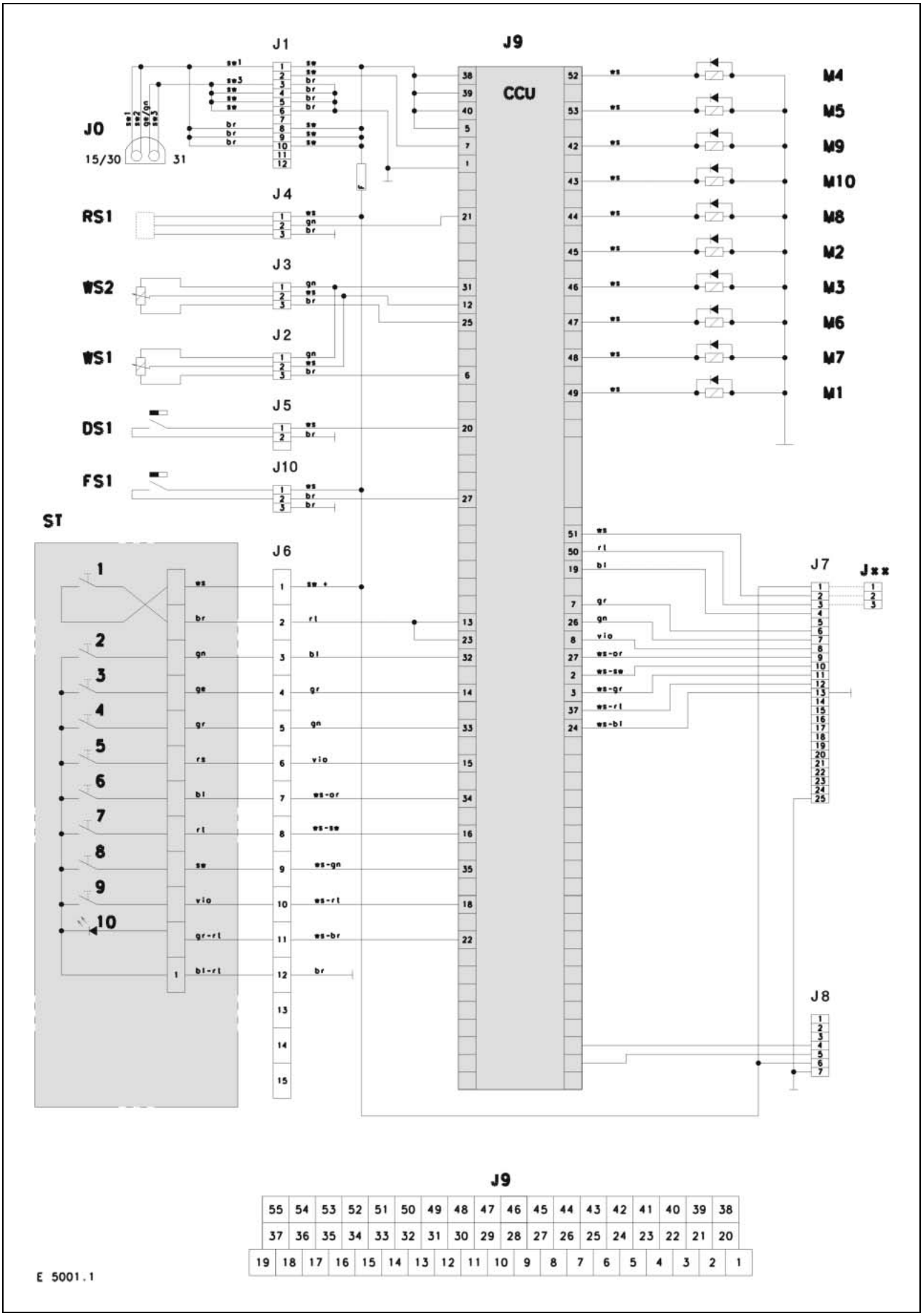

https://truckmanualshub.com/


## 1.3 CCT LINER 3000

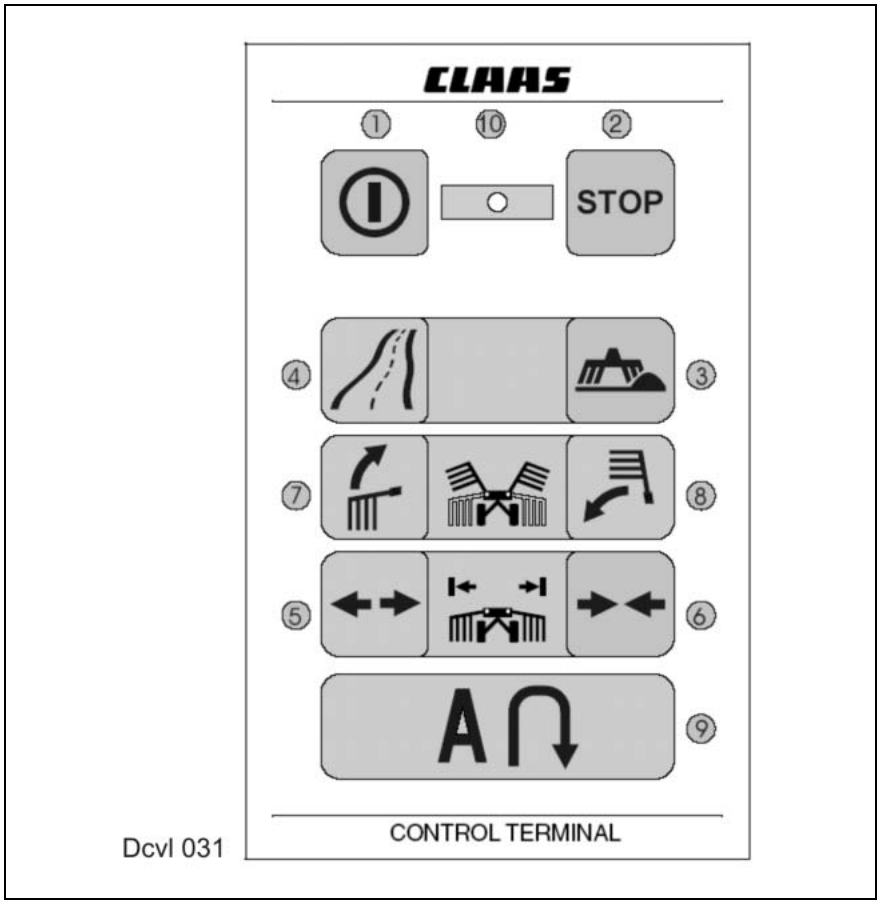


Key to diagram

1 On/Off switch
(press for approx. 3 seconds until LED lights up or goes out)
2 Stop switch (program interruption)
3 Working position switch
4 Transport position switch
5 Swath width front wider switch
6 Swath width front narrower switch
7 Raise front rotors switch
8 Lower front rotors switch
9 Turning area switch
10 LED (light-emitting diode)

After switching on the control terminal, the angle transmitters are automatically tested:

- LED 10 lights up: no fault
- LED 10 flashing once: front angle transmitter defective.
- LED 10 flashing twice: rear angle transmitter defective.
- LED 10 flashing three times: both angle transmitters defective.

https://truckmanualshub.com/


Control sequence

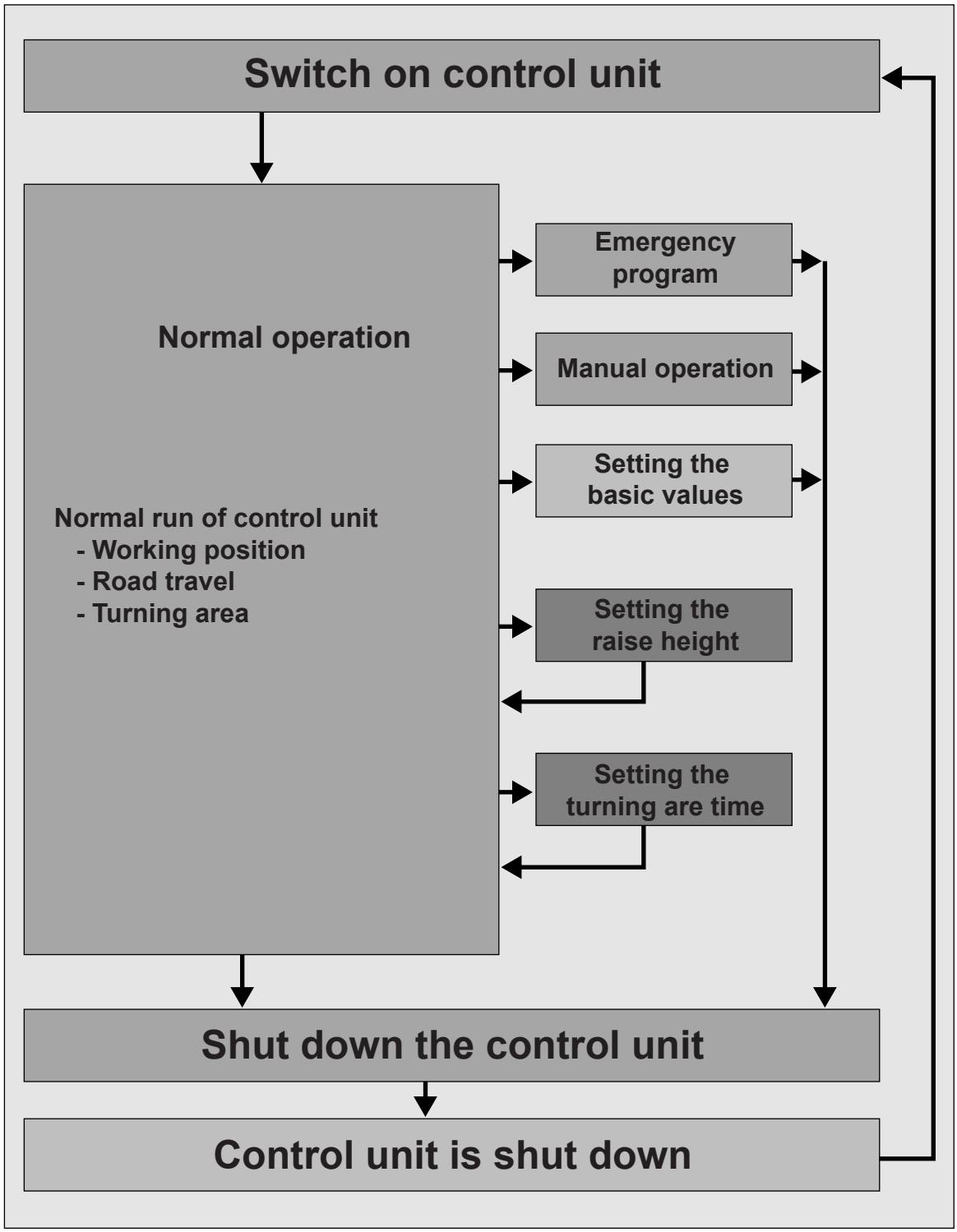


Dcvl 032 en

https://truckmanualshub.com/


### 1.3.1 Manual control

Manual control is used for diagnosis purposes.
Individual functions (valves) are checked.

Switching on manual control:

Press key 3 (working position) and key 6 (front swath width) simultaneously for approx. 7 seconds.
The flashing mode of LED 10 changes.

**Key functions when manual control is active**

| | |
|---|---|
| Folding up the rear rotors | Press key 4 (transport position). |
| Lowering the rear rotors | Press key 3 (working position). |
| Folding up the front rotors | Press key 7 (fold up front rotors). |
| Lowering the front rotors | Press key 8 (lower front rotors). |
| Increasing the front swath width | Press key 5 (increase working width) |
| Decreasing the front swath width | Press key 6 (decrease working width) |
| Raising/lowering the chassis | Press key 9 (turning area) and hold it (chassis is raised or lowered). |

**Notes:**

- All functions only work as long as the corresponding key is pressed.
- When the control unit is in this mode, all safety circuits are shut down. When the swather is in working position, do not lower the chassis!
- After shutting down the control unit, it will resume normal operation when switching it on the next time.

https://truckmanualshub.com/


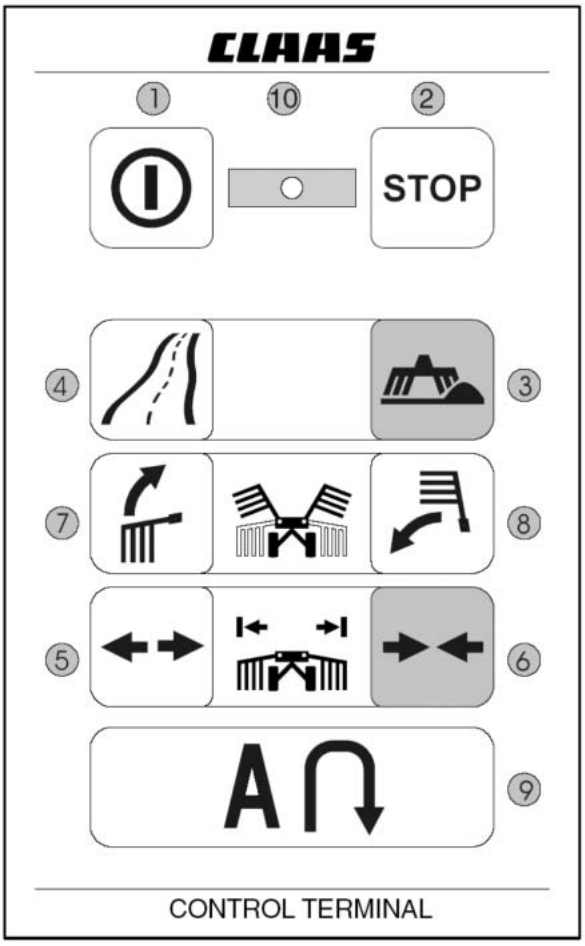


Dcvl 033

https://truckmanualshub.com/


### 1.3.2 Emergency program

The emergency program could be used when one angle transmitter fails.

Switching on:

Press key 3 (working position) and key 5 (increase front swath width) simultaneously for 7 seconds.

**Notes:**

- The emergency program goes through the different functions during the period previously stored. This cannot be changed.
  (Basic setting, rotor height adjustment and time adjustment on the turning are not possible).
- Switching back and forth between the “Raise front rotors” and “Lower front rotors” functions is not possible.
- The functions “Fold rotors to working position” and “Fold rotors to transport position” must always be completed. When one process is stopped by the STOP key, it must be repeated in order to reach the desired position.
- After shutting down the control unit, it will resume normal operation when switching it on the next time. The emergency program must now be re-started.

https://truckmanualshub.com/


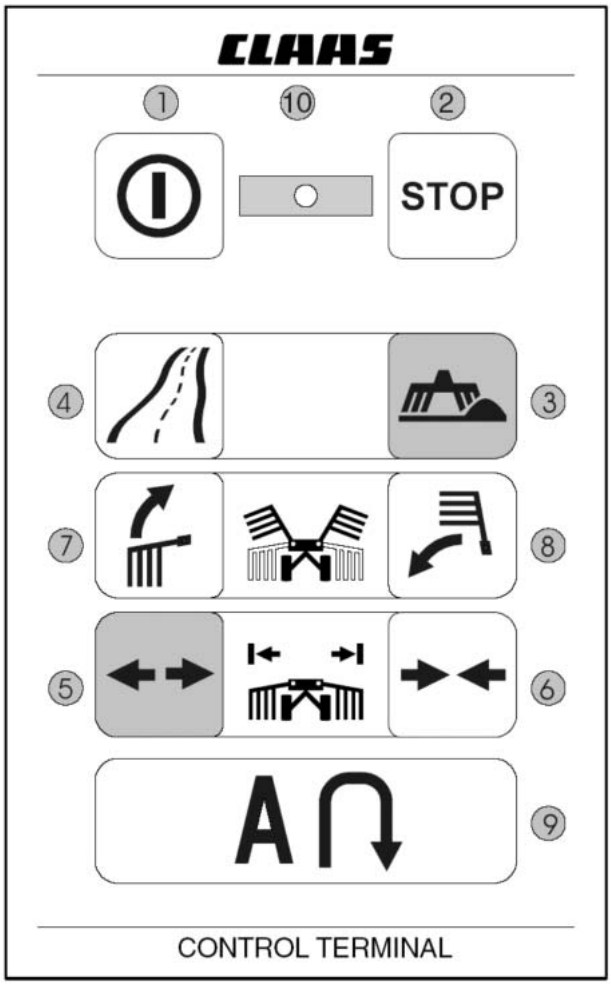


Dcvl 034

https://truckmanualshub.com/


### 1.3.3 Setting the rotor raise height

| | |
|---|---|
| Activating the setting mode: | Press key 3 and key 7 simultaneously for approx. 3 seconds.<br>The flashing mode of LED 10 changes. |
| Go to the desired rotor positions using keys 5 – 8: | Key 5: Raising the rear rotors.<br>Key 6: Lowering the rear rotors.<br>Key 7: Raising the front rotors<br>Key 8: Lowering the front rotors |
| Saving the settings | When the desired setting has been reached, save this setting by pressing key 9. |

https://truckmanualshub.com/


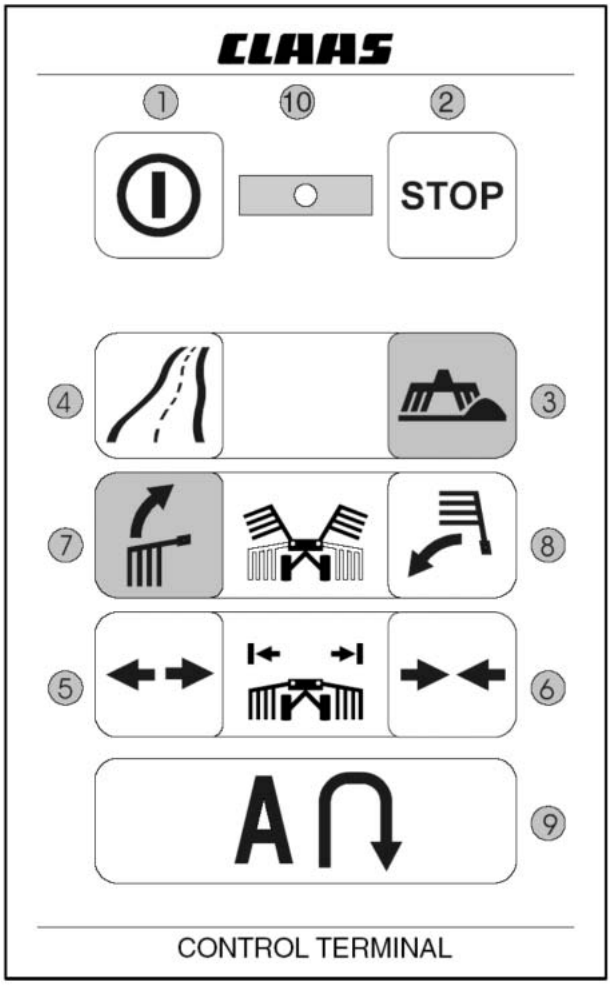


Dcvl 035

https://truckmanualshub.com/


### 1.3.4 Working with the rear rotors only

Application:

- for work on narrow plots of land
- for depositing lighter swaths

Operation:

First press key 9.

Now press key 7.
The front rotors remain raised, the rear rotors are lowered to their working position.

Now either press key 9 = all rotors are raised,
or
press key 8 = all rotors are lowered to their working position.

### 1.3.5 Raising the front rotors separately

Separately raising the front rotors is only possible when using additional equipment:
2x 812 987.1 Hose (6 m x 8 NN; 2 union nuts)
1x 904 268.0 Shut-off tap
2x 812 989.0 Coupling plug

The tractor must be equipped with a double-acting additional control unit for each rotor.

The rear rotors cannot be raised separately.

https://truckmanualshub.com/


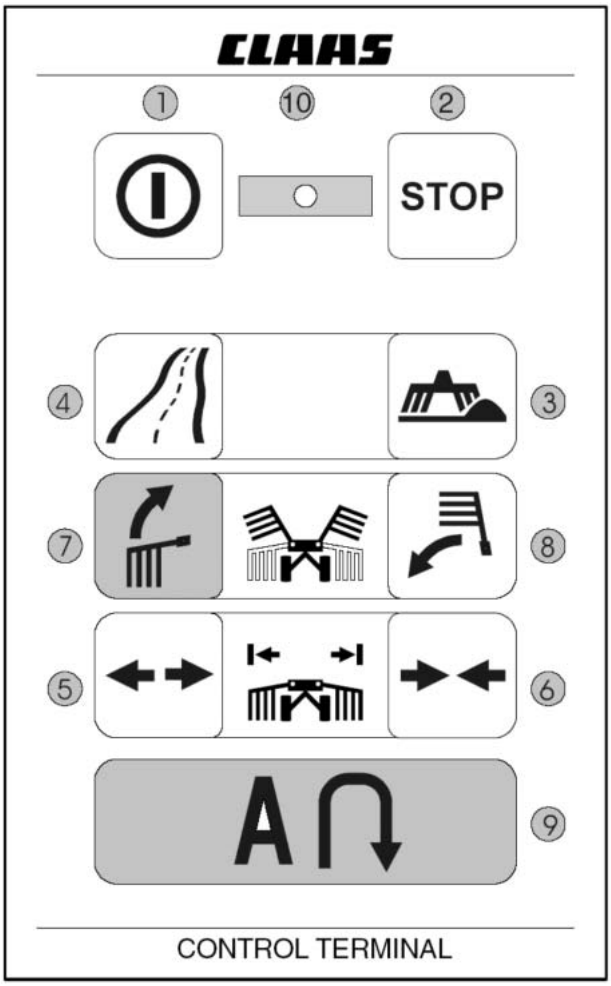


Dcvl 036

https://truckmanualshub.com/


### 1.3.6 Setting the sequential control on the turning area

The sequential control defines the time delay by which the rear rotors are lowered or raised as compared with the front rotors.
Before the first use, the control unit can be adapted to the individual ground speed.

Lowering the rotors:

Briefly press key 9 when driving on the turning area.
After this (within 3 seconds), press and hold key 6.
The rear rotors will fold down only after this key is released.
The time between lowering the front rotors and lowering the rear rotors has now been stored.

Raising the rotors:

Briefly press key 9 when driving out of the turning area.
After this (within 3 seconds), press and hold key 6.
The rear rotors will fold up only after this key is released.
The time between raising the front rotors and raising the rear rotors has now been stored.

The basic ex-works setting can be programmed at any time as an alternative to the individual setting:

Basic setting
(3 seconds = ex-works programming)

Press key 9.
After this (within 3 seconds), press key 5.
The time delay between lowering/raising of the front rotors and lowering/raising of the rear rotors is set to 3 seconds.

https://truckmanualshub.com/


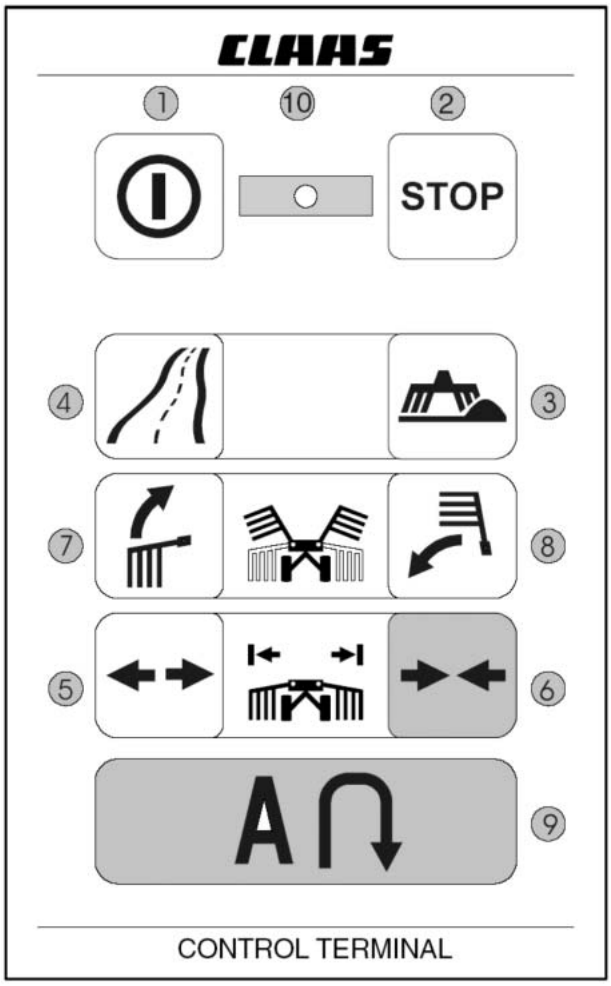


Dcvl 037

https://truckmanualshub.com/


### 1.4 Learning the limit stops (setting of basic values)

This process includes:
- reading in of the individual angle transmitter values,
- setting the sequential control of the rear rotors relating to the front rotors to the ex-works values (3 seconds).

This process must be carried out when
- electronic components (module, angle transmitter) have been replaced,
- trouble in the program run occurs.

#### 1.4.1 Execution

Setting the basic values from the transport position

The machine is in transport position and on a level surface.
(The arms must be able to fold out completely.)
Switch on the tractor hydraulics.
Adjusting the engine speed and possibly the volume flow controller of the tractor hydraulics:
Approx. 35 – 60 l/min. are required for the oil supply.
The setting process is automatic and can only be interrupted with the STOP key.

1. Switch on the control unit.

Keep key 1 pressed for 3 seconds until LED lights up.

2. Activating the basic value setting process

Press key 3 (working position) and key 4 (road travel) simultaneously until the Liner hydraulics is active (hydraulic noise).
During the setting process, first the chassis is raised to working position.
To make the program continue, the Reed switch (on the left axle arm) must be activated = magnet in front of the Reed switch (from serial no.).

**Liner machines without Reed switch (up to serial no.)**

To allow the setting process to be carried out on machines without Reed switch, press key 9 after raising the chassis to working position.

3. Program sequence

After raising the chassis, all rotors are lowered to working position and, after a certain time, raised again automatically.
Wait until the Liner 3000 hydraulics is shut down.
Switch off the control unit (press key 1 for more than 3 seconds).

4. Checking

Switch on the machine.
Press key 3 (working position).
When all rotors have lowered to their working position, the control unit is OK.

**Setting the basic values from the working position**

Press keys 3 and 4 simultaneously for 10 seconds.
The hydraulic pressure rises and this can be heard. After a short time, all rotors fold up to transport position, the main chassis remains extended in working position. The signal lamp constantly lights up after this process is complete.

https://truckmanualshub.com/


**Caution:** Never activate the emergency program directly after setting the basic values.

When activating the emergency program directly following this setting process, a malfunction will occur:

When pressing key 9 at the end of the field, all rotors are raised up to the programmed height; when pressing key 9 (lower rotors to working position) one more time, the front rotors will not be lowered, but raised up to their transport position.

**Remedy:**
Raise and lower the rotors 20 times (using key 9) in normal operating mode.

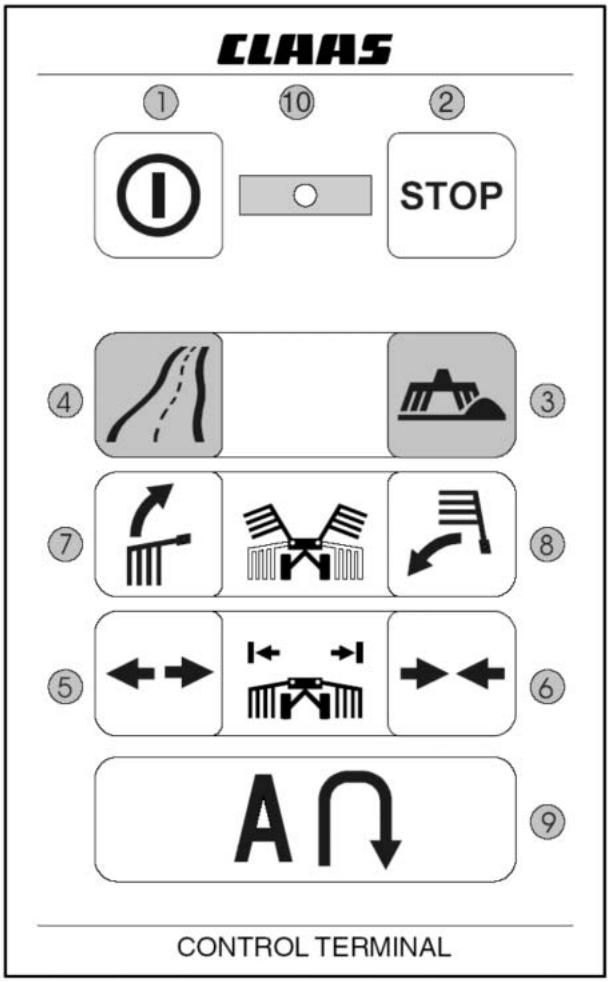

Dcvl 038

https://truckmanualshub.com/


## 1.5 Checking in case of malfunctions

| | |
|---|---|
| 1. On-board voltage | The on-board voltage should be between 10 and 16 volt under load. |
| 2. Oil supply | The oil supply from the tractor should be 35-60 litres/minute. |
| 3. Reed switch on chassis from serial no. | Check Reed switch in the end position of chassis |
| 4. Checking the angle transmitter | After switching on the control terminal, the angle transmitters are automatically tested:<br>LED 10 lights up: no fault<br>LED 10 flashing once: front angle transmitter defective<br>LED 10 flashing twice: rear angle transmitter defective.<br>LED 10 flashing three times: both angle transmitters defective.<br><br>The flashing mode is repeated every 15 seconds.<br><br>The signal voltage of the angle transmitters should be between 0.5 and 4.5 volt.<br>Measuring range of angle transmitters: 120°<br>Signal voltage at 0° = 0.5 volt<br>Signal voltage at 120° = 4.5 Volt<br><br>The signal voltage requires that:<br>the supply voltage be correct,<br>the angular sensor be correctly adjusted.<br><br>If the signal voltage is not in the target range between 0.5 and 4.5 volt, the fault is indicated by the flashing code. |
| 5. Manual operation | Activate manual operation and perform the individual functions.<br>If the functions are performed flawlessly, check the angle transmitters one more time. |
| 6. Re-initialisation | If the angle transmitters are OK, the machine should not be set to the basic values one more time. |
| 7. Switching on automatic functions | Switch on automatic functions if not OK, load program one more time (DOWNLOAD).<br>The program is loaded using the CDS (**C**LAAS **D**iagnosis **S**ystem), this requires:<br>• a download cable: part no. 935 890.0<br>• the instructions: part no. 959 049.0<br><br>When no remedy to the fault can be identified, replace the CCU. |

https://truckmanualshub.com/


## 1.6 Installing the angle transmitters

### 1.6.1 Front angle transmitter

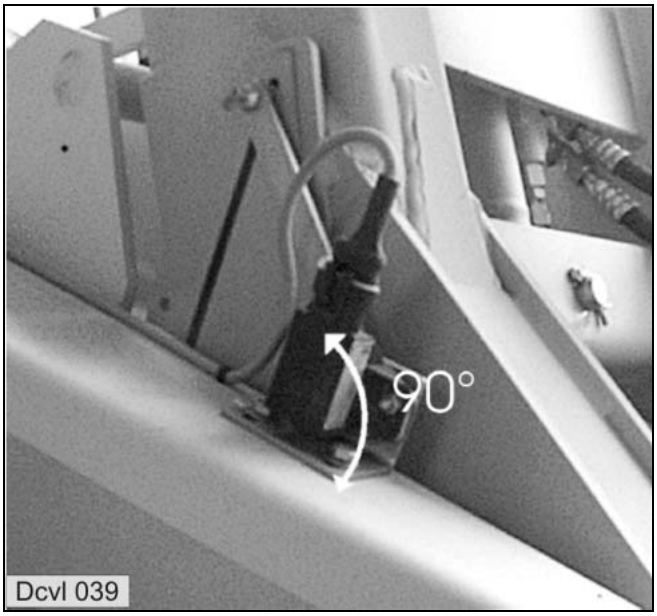

Dcvl 039

### 1.6.2 Rear angle transmitter

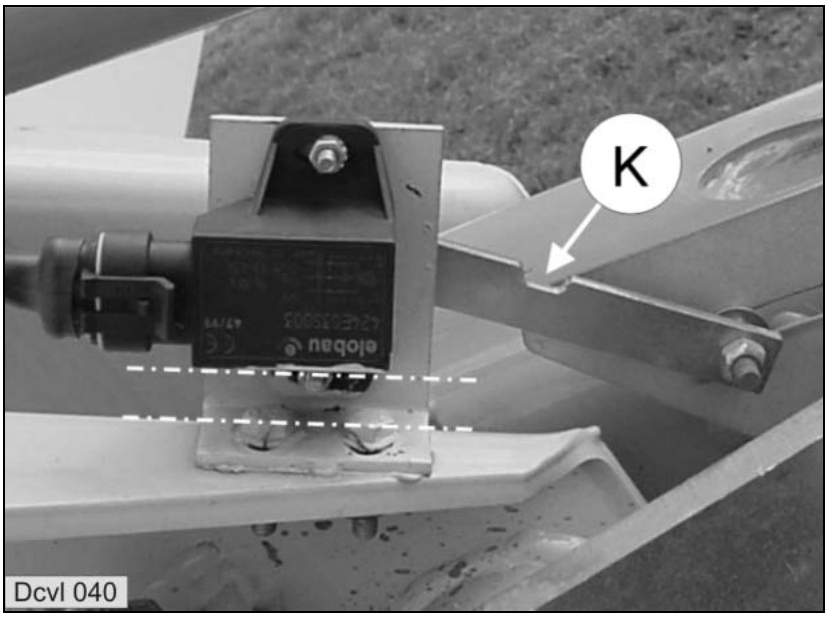

Dcvl 040

https://truckmanualshub.com/


### 1.6.3 Adjustment of angle transmitters

Front angle transmitter

The front angle transmitter must be installed at right angles (approx. 90°) to the frame (see picture).

Rear angle transmitter

The rear angle transmitter must be installed parallel to the frame. The position of the notch (K) in the actuation lever must point towards the frame or upwards when the rotors are lowered. (see picture).

### 1.6.4 Checking the signal voltages

This applies to both angle transmitters:

Supply voltage: 12 volt

Rotors raised (transport position): Signal voltage above 0.5 volt

Rotors lowered: Signal voltage below 4.5 volt.

**Measuring cable**

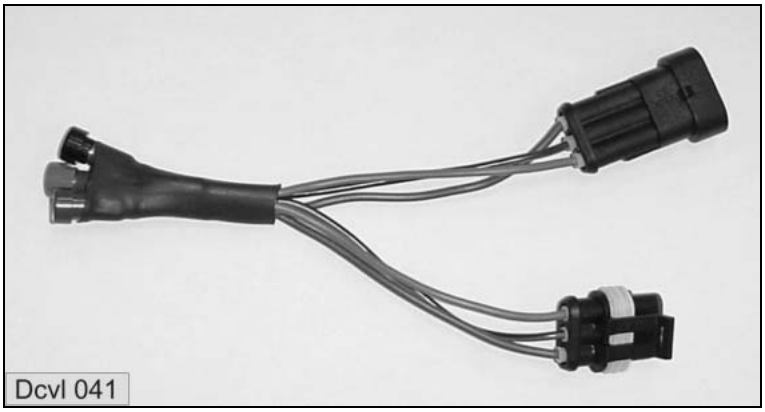


part no. 174 689.0

https://truckmanualshub.com/


### 1.6.5 Diagnosis of angle transmitter

After switching on the control terminal, the angle transmitters are automatically tested:
LED 10 lights up: no fault
LED 10 flashing once: front angle transmitter defective
LED 10 flashing twice: rear angle transmitter defective.
LED 10 flashing three times: both angle transmitters defective.

The flashing mode is repeated every 15 seconds.

Chassis Reed contact switch
(from serial no.)

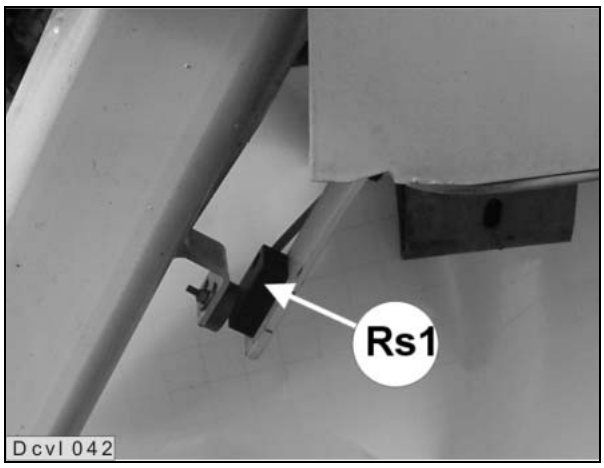

https://truckmanualshub.com/


## 1.7 Compressed-air brake system

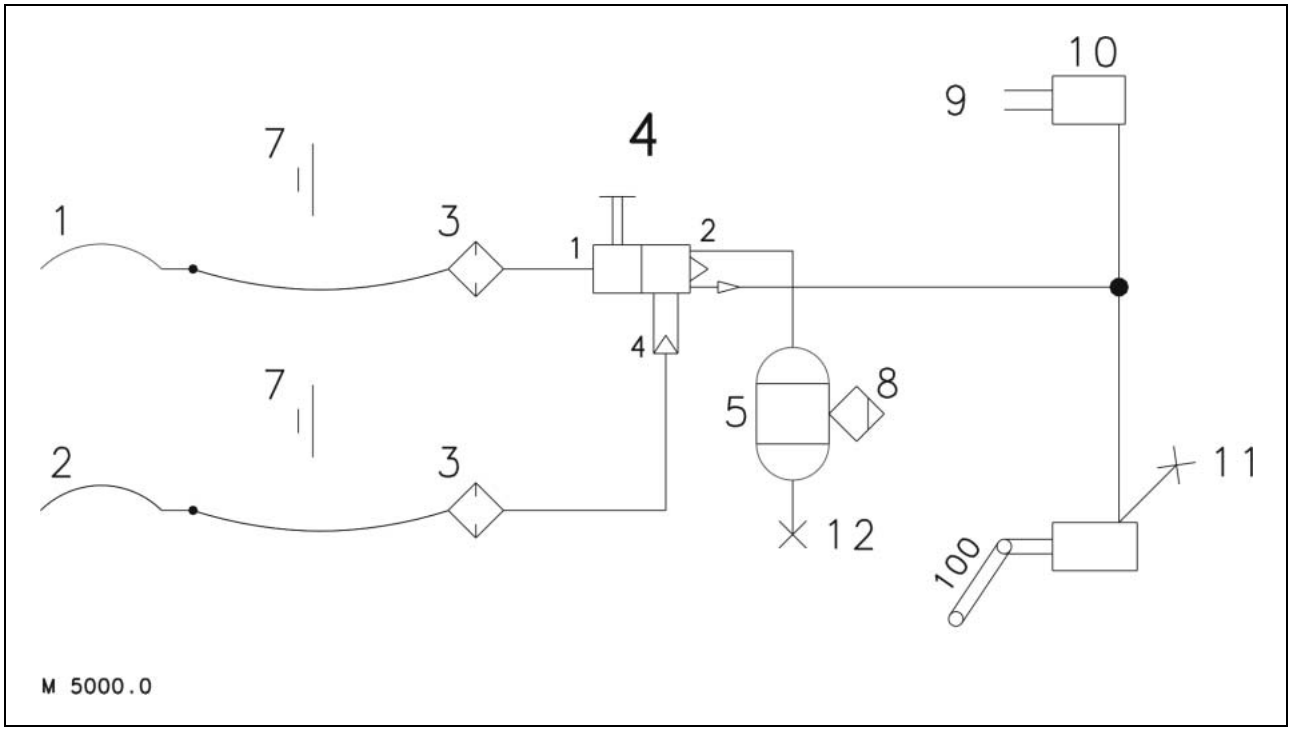


1 Red service line hose coupler (accumulator)
2 Yellow service line hose coupler (brake)
3 Filter
4 Trailer brake valve with release valve and pre-set pressure
5 Compressed air accumulator (20 litres)
6 Dewatering valve, manual
7 Empty coupling
8 Eye joint link (elongated hole)
9 Eye joint link (elongated hole)
10 Membrane cylinder, type 12
11 Test port M16x1.5
12 Test port M22x1.5

https://truckmanualshub.com/

https://truckmanualshub.com/


# 2.0 LINER 1550 Twin Profile

## 2.1 Hydraulic System

| | | |
|---|---|---|
| Key to diagram | 1 | Tractor port, double-acting and single-acting |
| | 2 | 2/2 way valve, 10 bar (adjustable 3 - 40 bar). Rear lowering velocity |
| | 3 | Pressure sequence valve 100 bar (adjustable 70 - 210 bar). Adapt ground speed. |
| | 4 | Lock-up valve unit |
| | 5 | Steered wheels |
| | 6 | Rear rotors = II |
| | 7 | Front rotors = I |
| | 8 | Swathing rubber May be folded hydraulically up to serial no. |
| Switching sequence of rotors: | | Raising: First I, then II<br>Lowering First I, then II |

https://truckmanualshub.com/


LINER 1550 Twin Profile

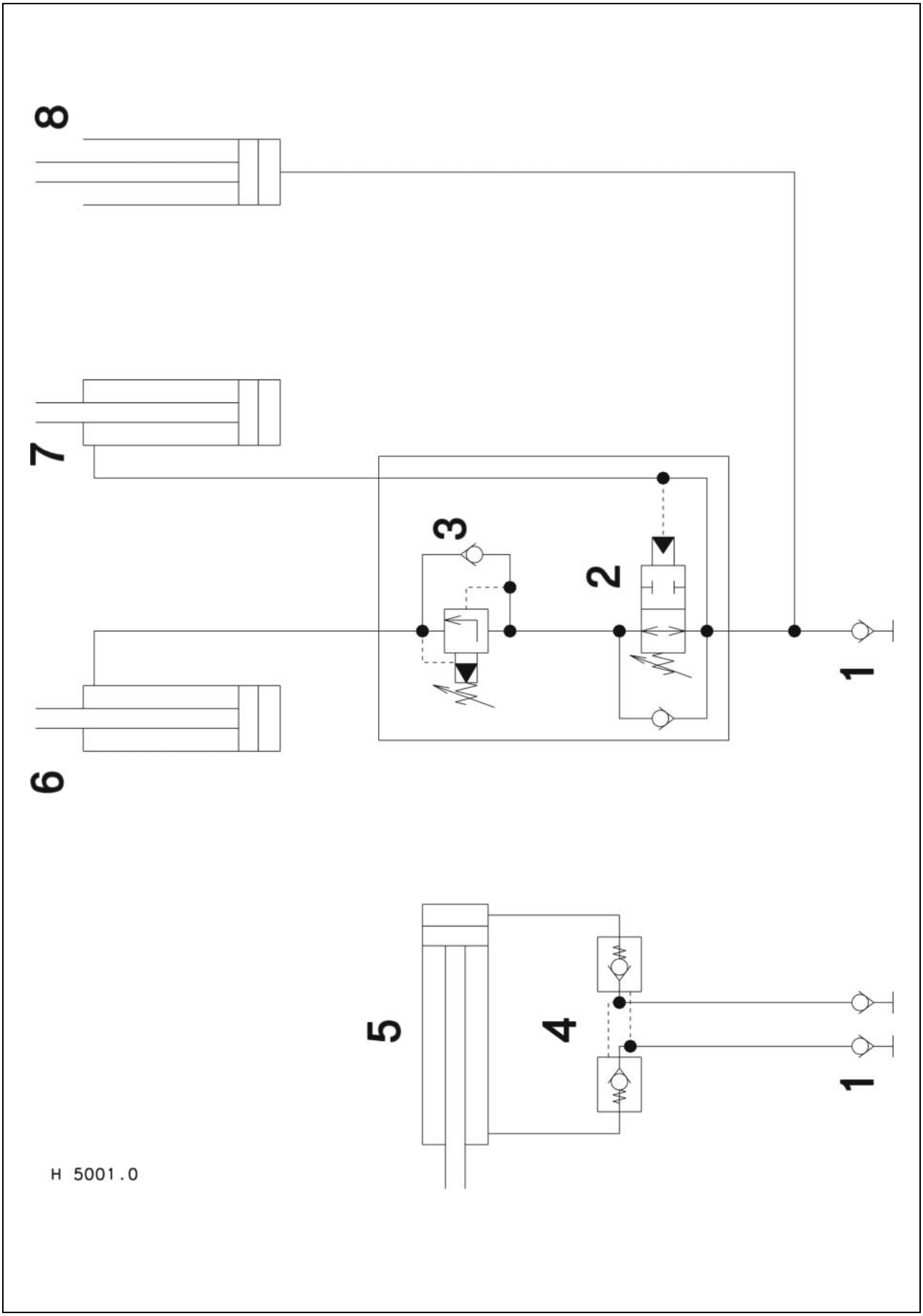

https://truckmanualshub.com/


# 3.0 LINER 650 Twin, LINER 880

## 3.1 LINER 650 Twin

### 3.1.1 Hydraulic System

1 Connection with a double-acting control unit on the tractor
2 Connection with a single-acting control unit on the tractor
3 Hydraulic cylinder: Fold rear rotor (left or right)
4 Hydraulic cylinder: Raise front rotors
5 Hydraulic cylinder: Raise rear rotors
6 Hydraulic cylinder: Raise drawbar
7 Hydraulic cylinder (compensating cylinder): Frame and rear rotor

EW Single-acting control unit
DW Double-acting control unit

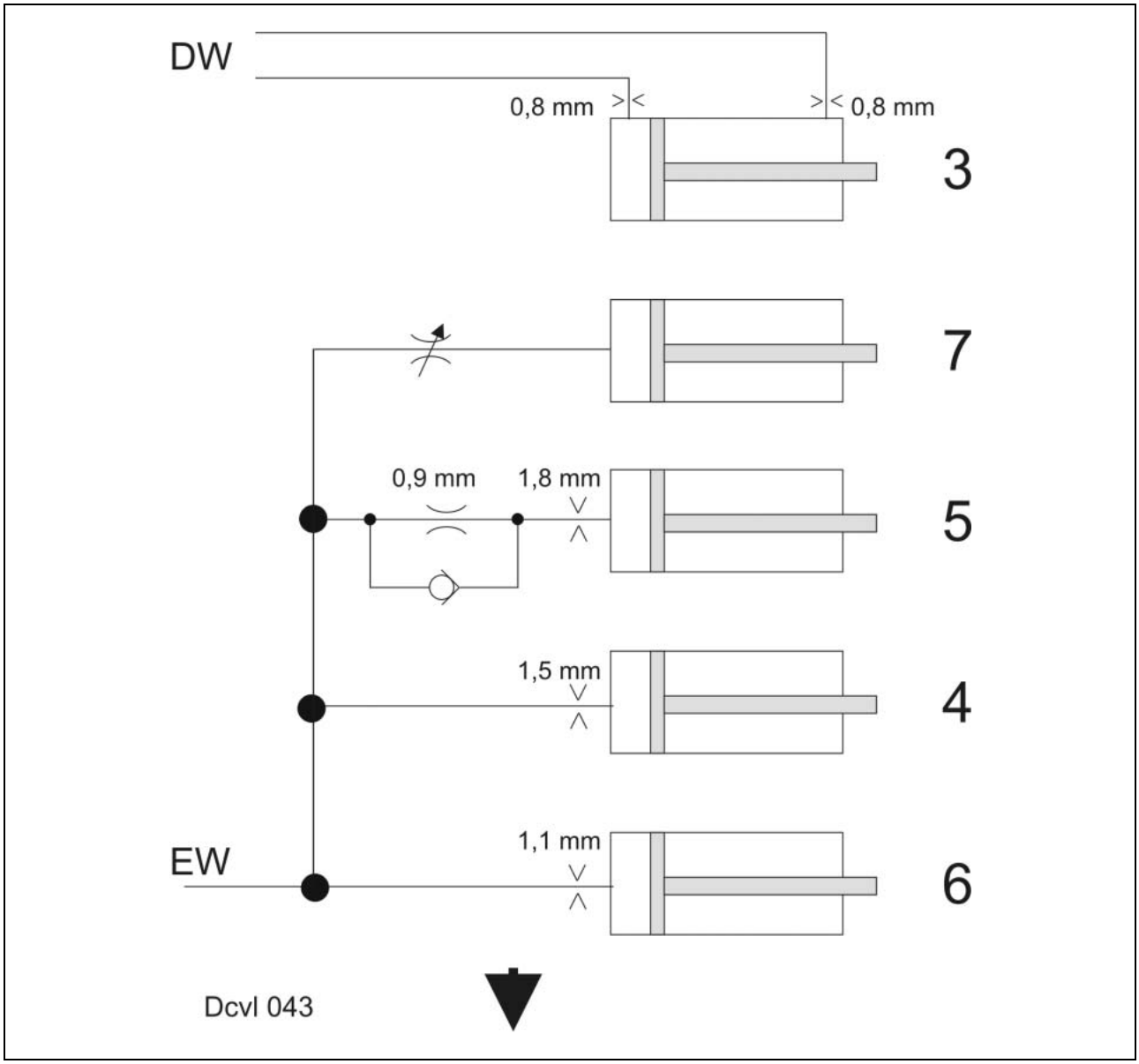

https://truckmanualshub.com/


## 3.2 LINER 880 Twin

### 3.2.1 Hydraulic System

1 Shut-off tap
2 3/3-way valve
3 Orifice plate ∅ 1.8 mm
4 Orifice plate ∅ 1.8 mm
5 Hydraulic cylinder (on left side in direction of forward travel)
6 Hydraulic cylinder (on right side in direction of forward travel)

EW Single-acting control unit

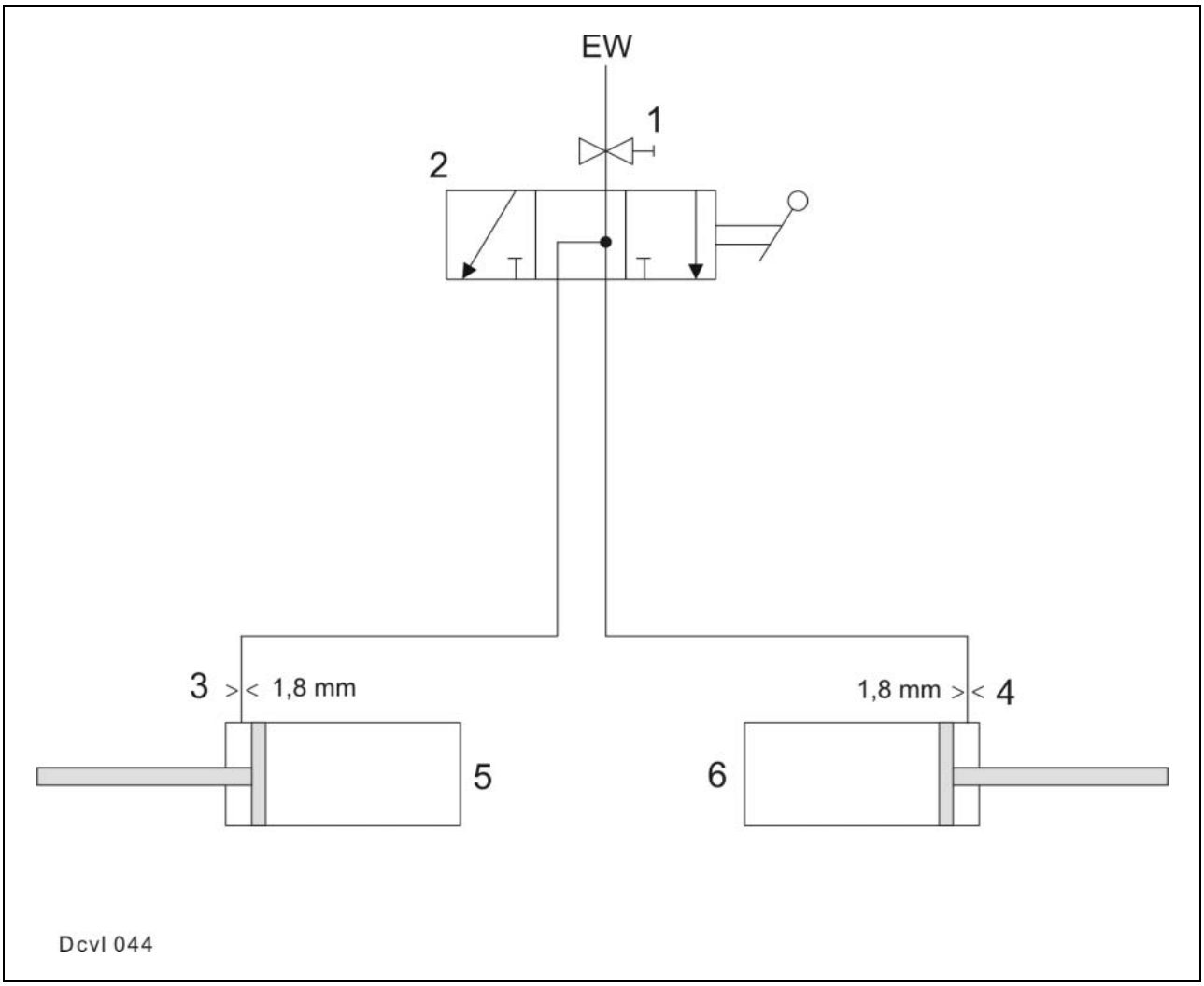

https://truckmanualshub.com/


# 4.0 Flow divider for slopes

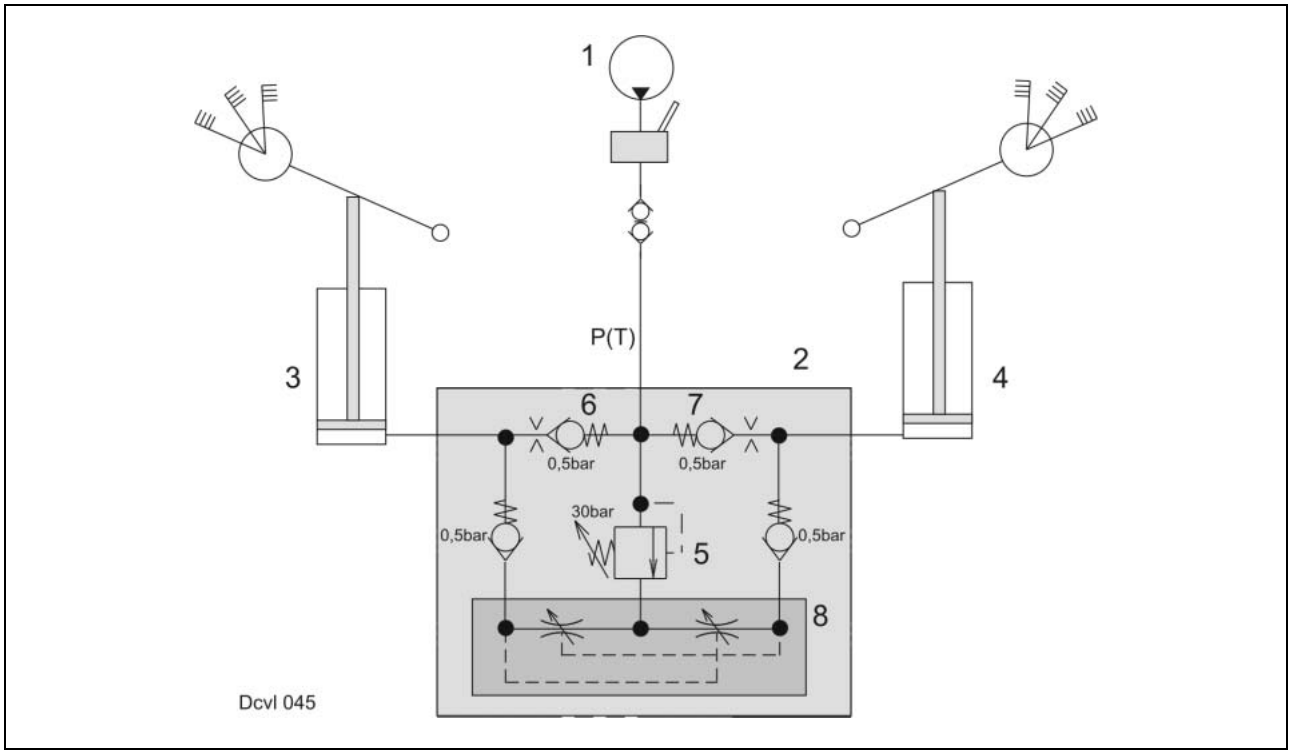


Function

The volume flow of pump (1) is directed into the flow divider (2) via an additional control unit of the tractor and port P(T).
This flow divider splits up the incoming volume flow into two equal volume flows that flow to the hydraulic cylinders (3) and (4) via ports (A) and (B). These volume flows are kept constant by a pressure balance (8) in flow divider (2).
This control action also occurs when different loads occur on the hydraulic cylinders (3) and (4), e.g. when working on slopes.

When working or turning on a slope, there are different pressures in the hydraulic cylinders (3) and (4), depending on the position of the implement. The pressure relief valve (5) and two non-return valves prevent a cross-flow from (A) to (B) and vice versa.
The extended hydraulic cylinders (3) and (4) thus remain in their positions. When the hydraulic cylinders (3) and (4) are retracted, oil flows through the non-return valves (6) and (7).

The pressure relief valve (5) is pre-set to 30 bar. To determine the max. possible working pressure and consequently the lifting force, the pressure of the pressure relief valve must be subtracted from the pump pressure (tractor).

Example:

180 bar pump pressure (tractor)
- 30 bar pressure relief valve (5)
150 bar Pressure difference = working pressure = lifting force

https://truckmanualshub.com/


The higher the pressure relief valve (5) is set, the smaller the pressure difference and consequently the lifting force of hydraulic cylinders (3) and (4).

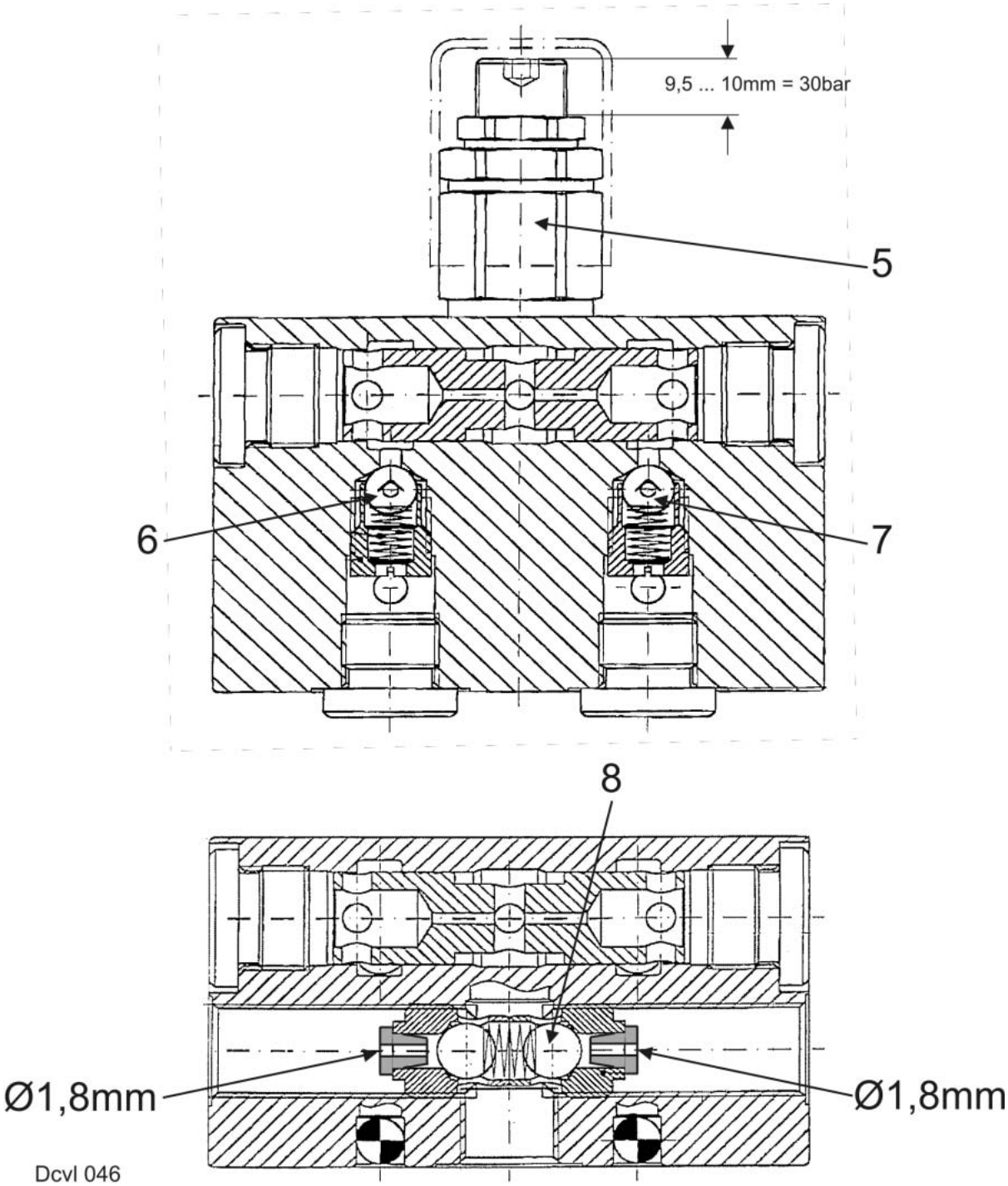

https://truckmanualshub.com/


## 4.1 LINER 1500/1550

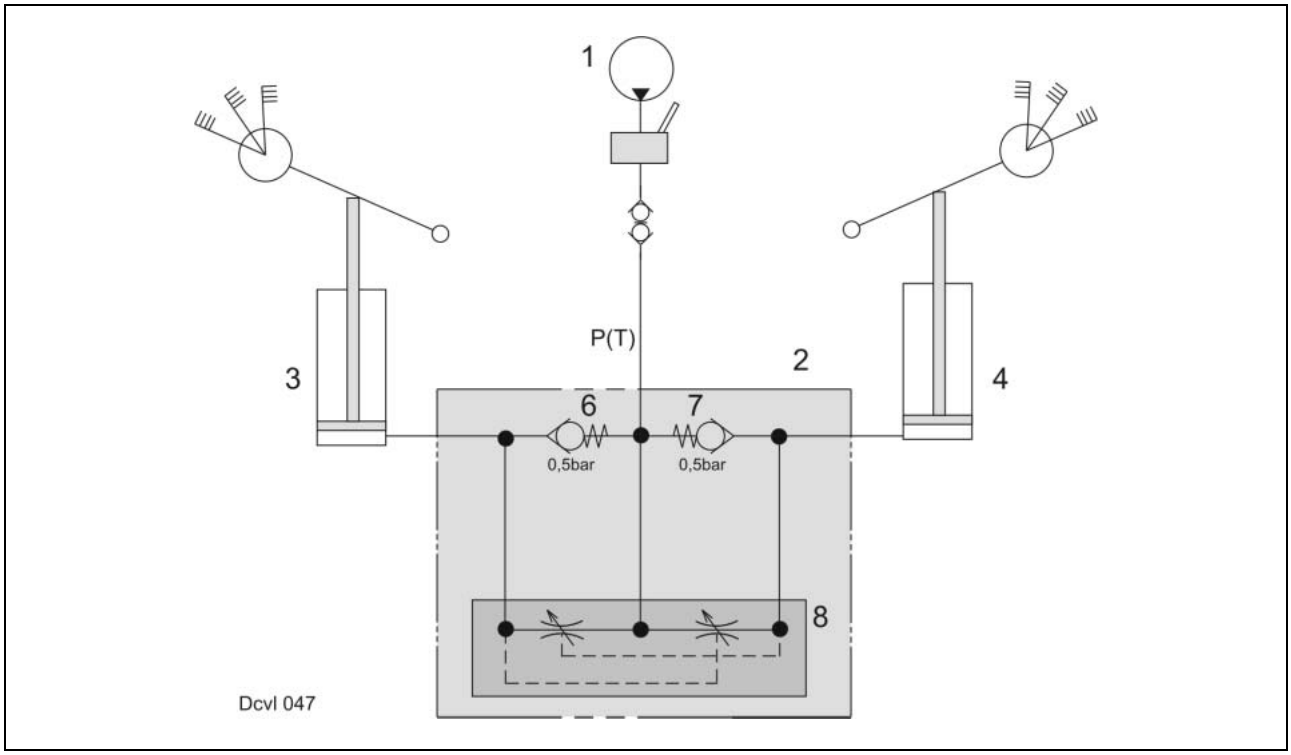


Function

The volume flow of pump (1) is directed into the flow divider (2) via an additional control unit of the tractor and port P(T).
This flow divider splits up the incoming volume flow into two equal volume flows that flow to the hydraulic cylinders (3) and (4) via ports (A) and (B).
These volume flows are kept constant by a pressure balance (8) in flow divider (2).
This control action also occurs when different loads occur on the hydraulic cylinders (3) and (4), e.g. when working on slopes.

The higher the pressure relief valve (5) is set, the smaller the pressure difference and consequently the lifting force of hydraulic cylinders (3) and (4).

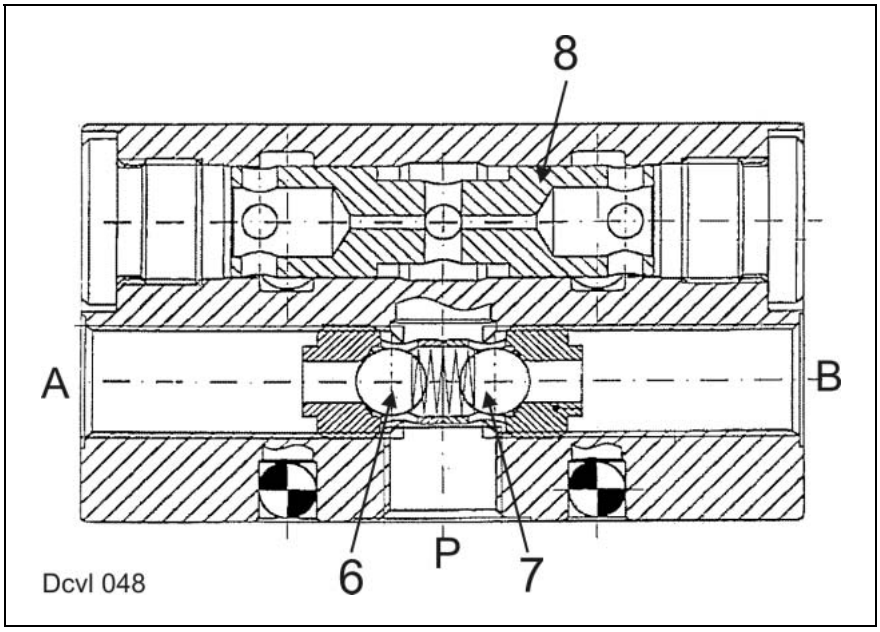

https://truckmanualshub.com/


**1.0 VOLTO 1050 H hydraulic system circuit diagram ..... 2**

**2.0 VOLTO 1050 operating instructions ..... 4**

2.1 Moving from transport to working position ..... 4
2.2 Moving from working to transport position ..... 6

**3.0 VOLTO 870 H hydraulic system circuit diagram ..... 9**

**4.0 VOLTO 1050 T hydraulic system ..... 10**

**5.0 VOLTO 770 T hydraulic system ..... 16**

**6.0 VOLTO 670 hydraulic system ..... 18**

6.1 Flow divider ..... 20

**7.0 VOLTO 770, 770 H hydraulic system ..... 22**

7.1 Flow divider ..... 24

**8.0 VOLTO 870 T hydraulic system ..... 25**

https://truckmanualshub.com/


# 1.0 VOLTO 1050 H hydraulic system circuit diagram

Key to diagram

| | |
|---|---|
| 1 | Coupler |
| 2 | Shut-off tap |
| 3 | Fold side arm shut-off tap (white rope) |
| 4 | Shut-off tap – transport/working position |
| 5 | Orifice plate ∅ 1.5 mm |
| 6 | Flow divider |
| 7 | Longitudinal beam hydraulic cylinder |
| 8 | Longitudinal beam hydraulic cylinder |
| 9 | Right outside arm hydraulic cylinder |
| 10 | Left-hand outside arm hydraulic cylinder |
| 11 | Right-hand outside arm hydraulic cylinder |
| 12 | Left-hand side arm hydraulic cylinder |
| 13 | Chassis hydraulic cylinder |
| 14 | Chassis hydraulic cylinder |
| 15 | Raise/lower chassis shut-off tap (red rope) |
| S | Rope |

https://truckmanualshub.com/


VOLTO 1050 H

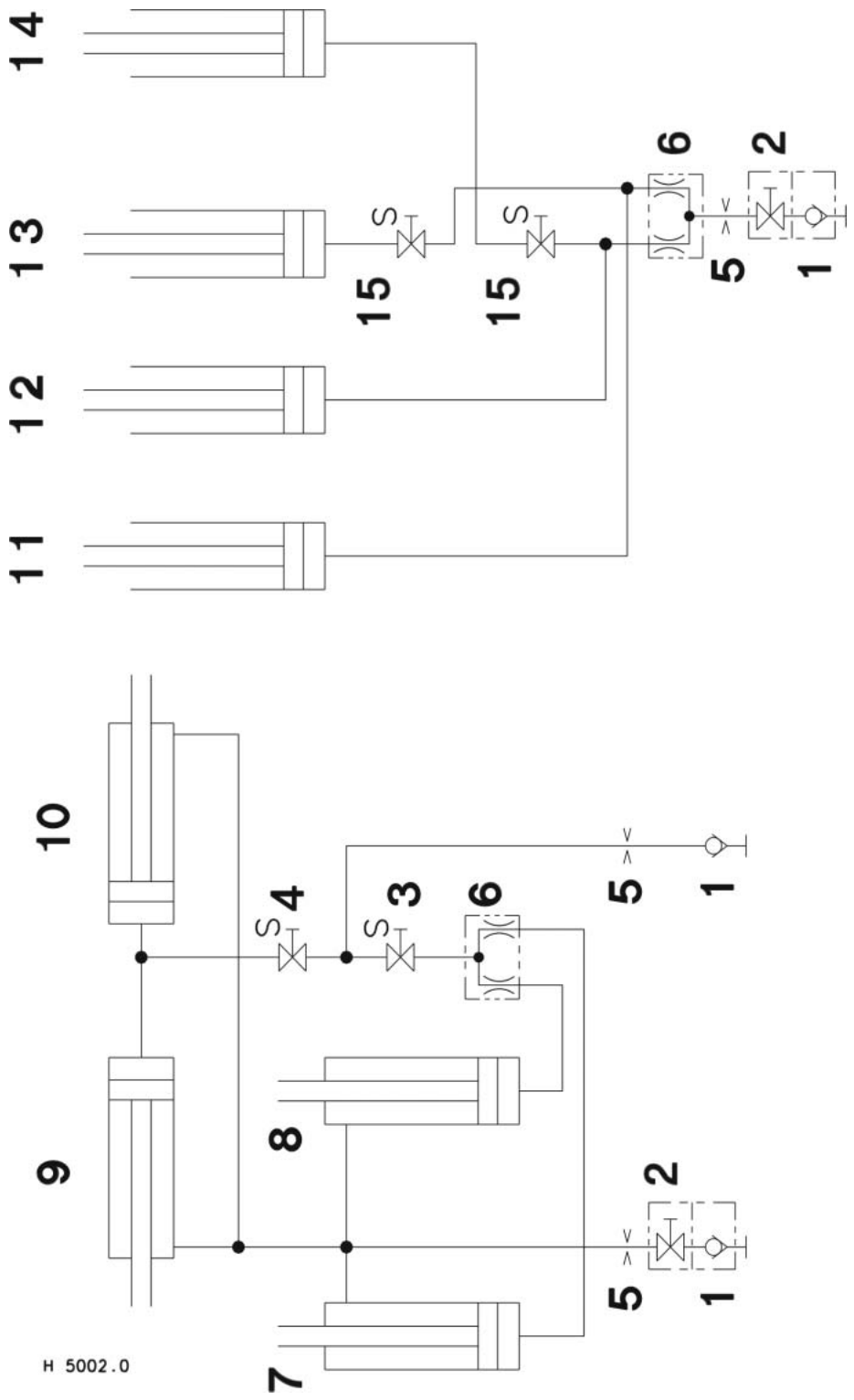

https://truckmanualshub.com/


# 2.0 VOLTO 1050 operating instructions

## 2.1 Moving from transport to working position

Lower the sensing wheel to the ground using the three-point hitch and set the three-point hitch to the float position. If the tractor has no float position, remove the sensing wheel.

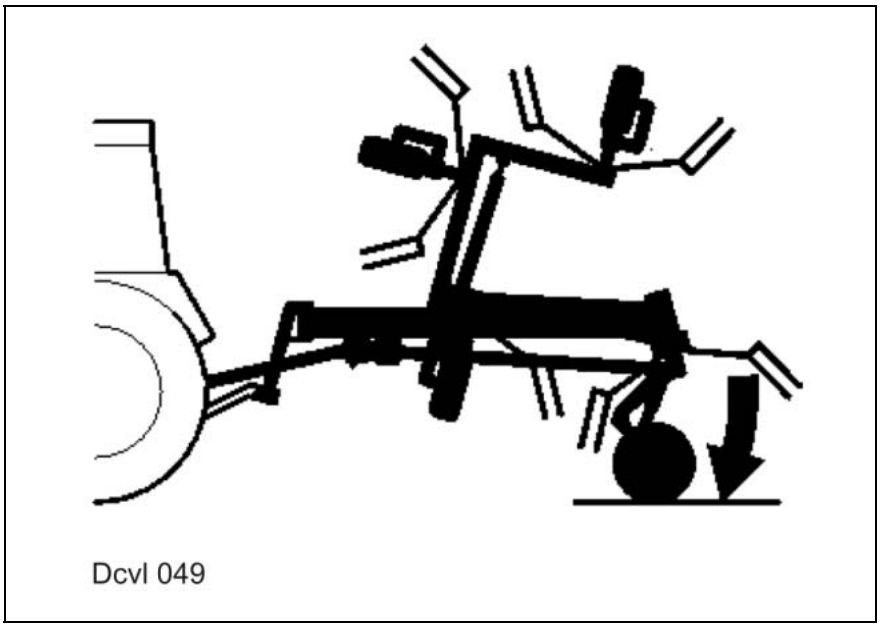


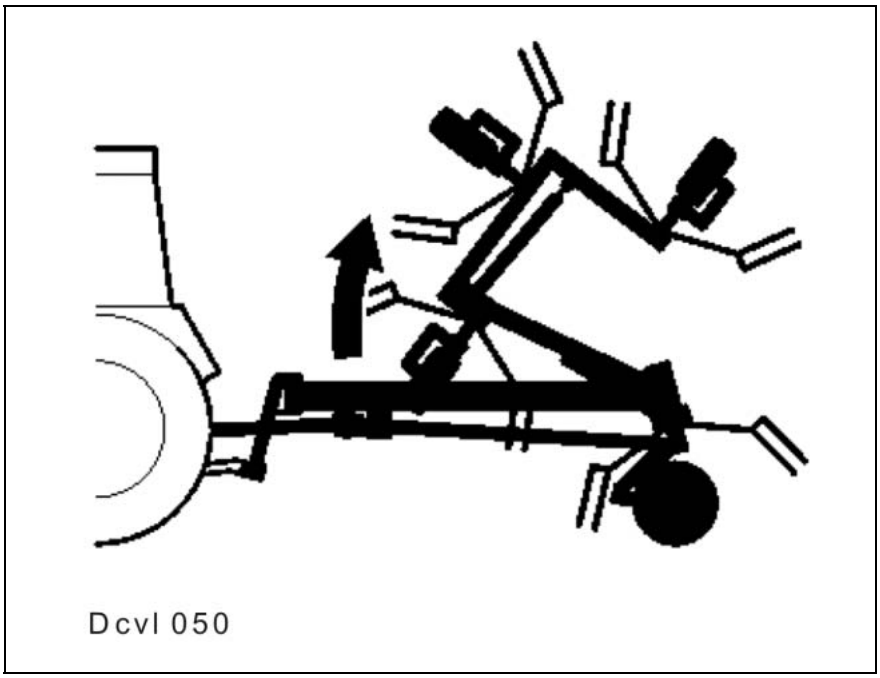


Release the red pull rope and raise the side arms up to the stop using the single-acting control unit.

https://truckmanualshub.com/


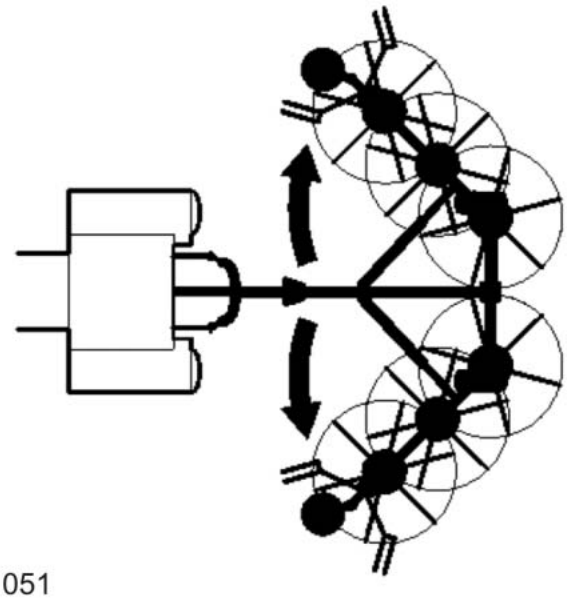

Dcvl 051

Pull the white rope and fold the side arms fully to the outside using the double-acting control unit.

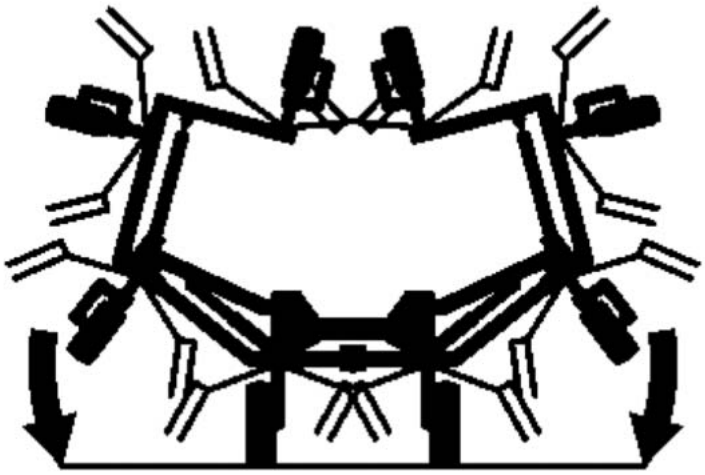

Dcvl 052

Lower the inner side rotors to the ground using the single-acting control unit.

https://truckmanualshub.com/


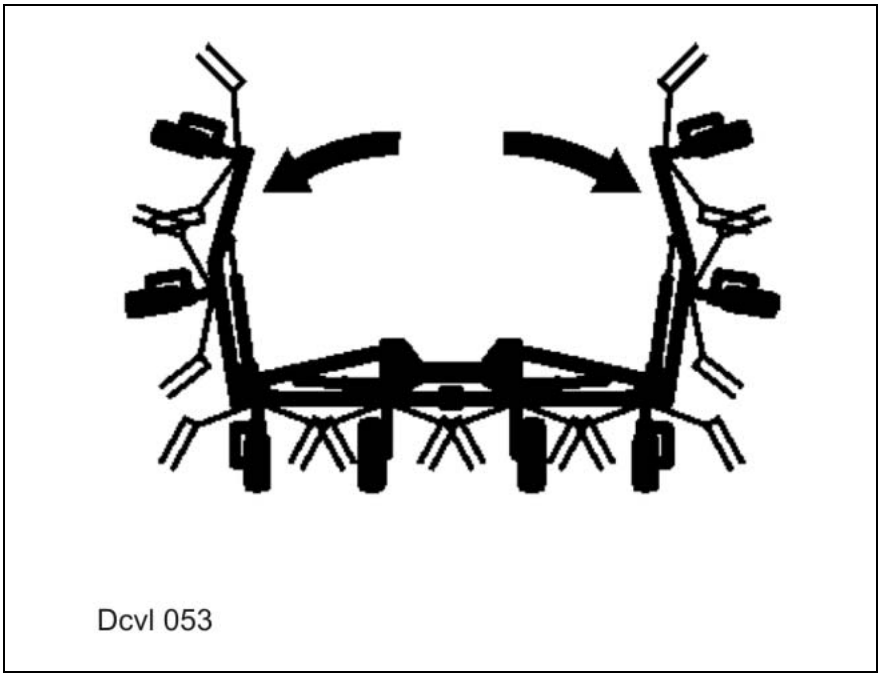


Fully lower the outer rotors using the double-acting control unit.

Important! During work, the single-acting control unit must be in float position. However, the double-acting control unit must be in neutral position (i.e. not in float position!).

## 2.2 Moving from working to transport position

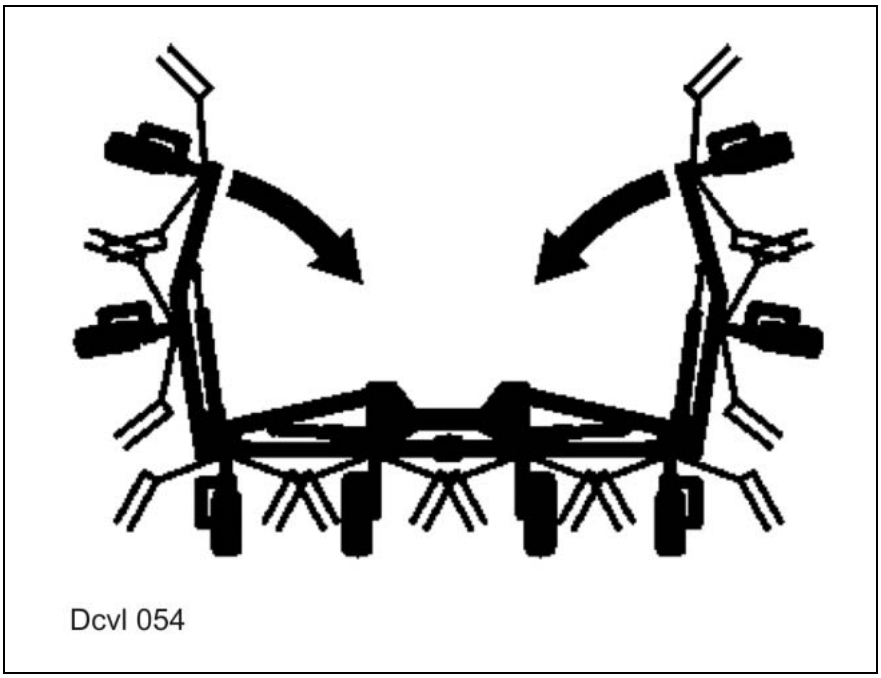


- Pull the red rope and fully lower the chassis at the rear, using the single-acting control unit.
- Fully fold in the outer rotors using the double-acting control unit.

https://truckmanualshub.com/


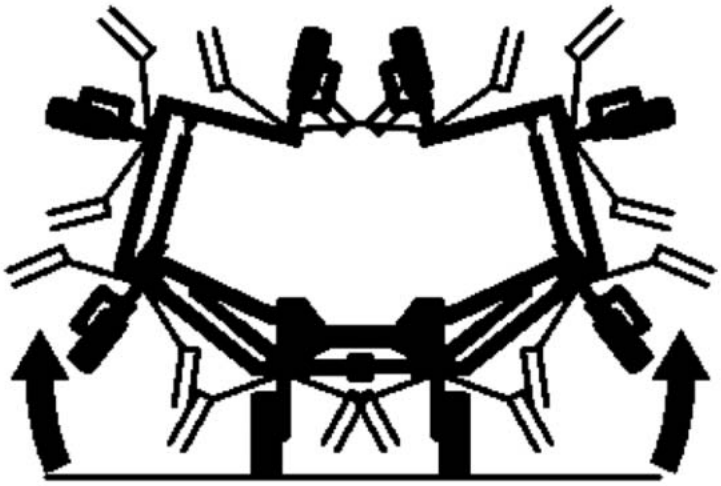

Dcvl 055

Important! Using the single-acting control unit, raise the side arms up to the stop. To avoid damage when folding in the side arms, always raise the rotors up to the stop.

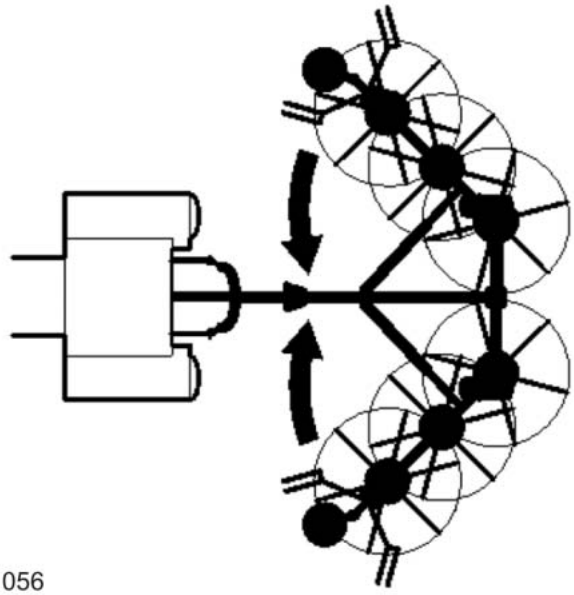

Dcvl 056

Pull the white rope and fold in the side arms fully using the double-acting control unit.

https://truckmanualshub.com/


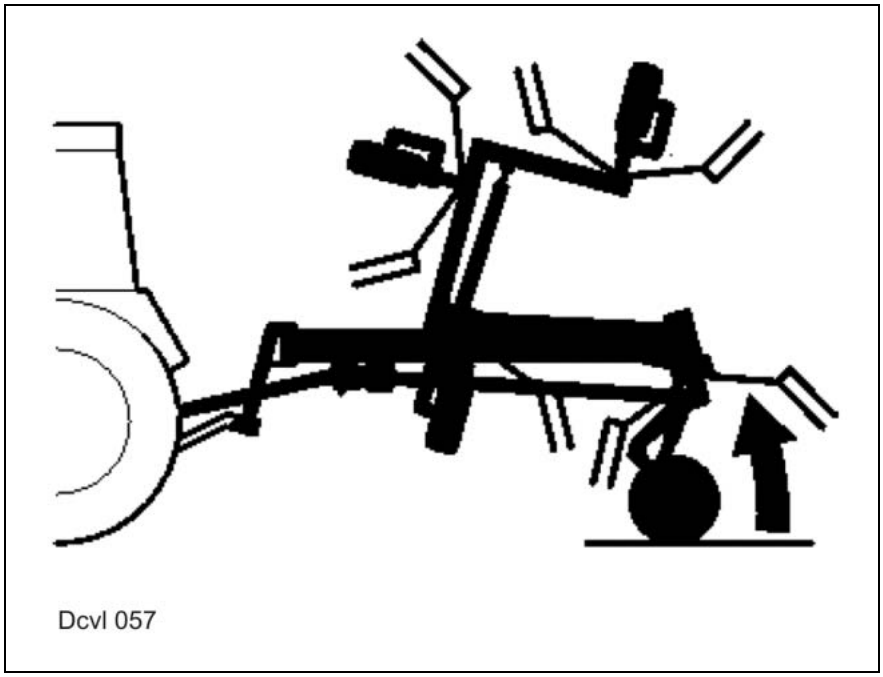
Dcvl 057

Pull the red rope and fully raise the chassis using the single-acting control unit.

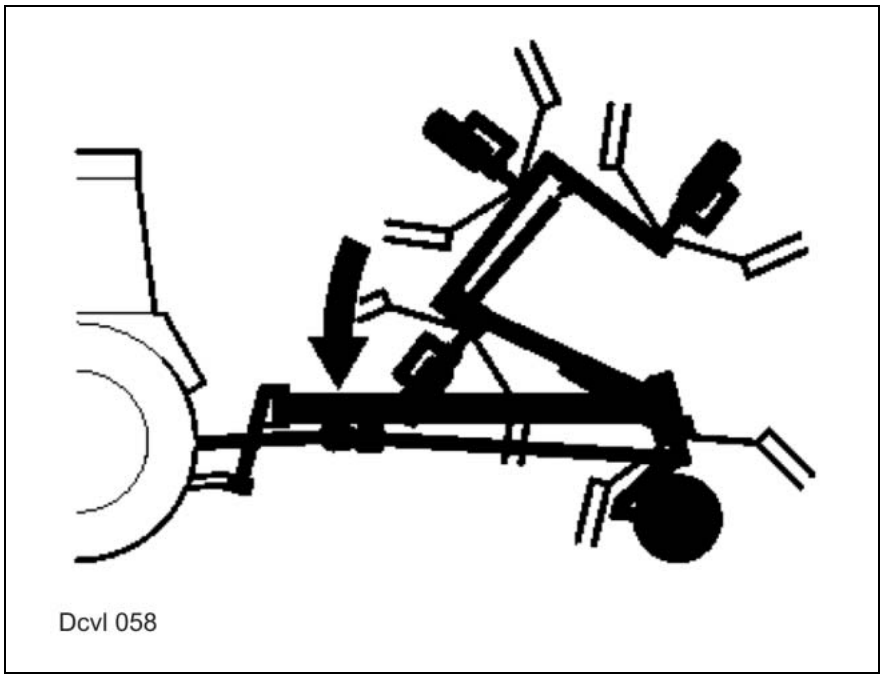
Dcvl 058

- Release the rope and let the side arms rest on the support using the single-acting control unit.
- Raise the machine fully at the front using the three-point hitch.

Important: Never engage the p.t.o. shaft when in transport position.

https://truckmanualshub.com/


## 3.0 VOLTO 870 H hydraulic system circuit diagram

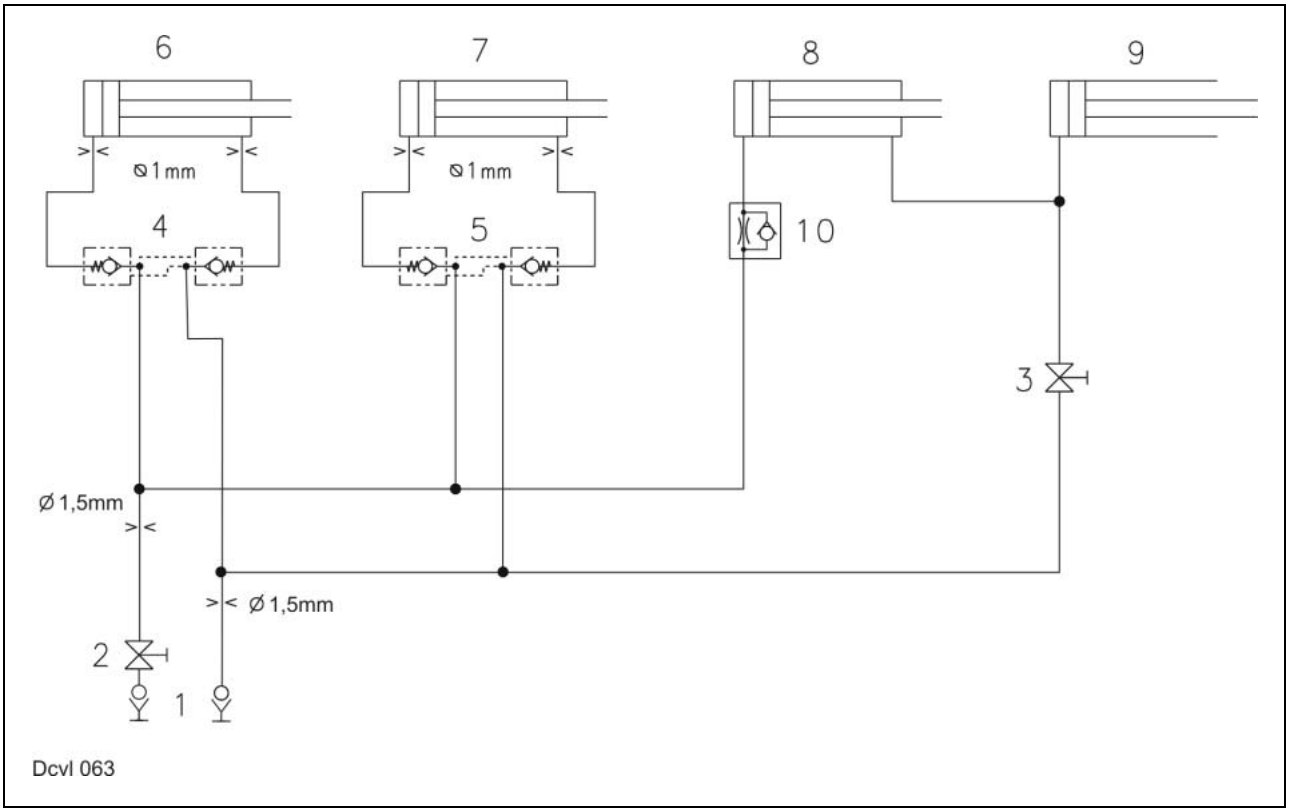


Key to diagram

| | |
|---|---|
| 1 | Quick release coupling, double-acting |
| 2 | Shut-off tap |
| 3 | Shut-off tap – left arm pivot point – (controlled by linkage) |
| 4 | Lock-up valve unit |
| 5 | Lock-up valve unit |
| 6 | Arm hydraulic cylinder |
| 7 | Arm hydraulic cylinder |
| 8 | Hydraulic cylinder (field edge limit rubber blanket) |
| 9 | Hydraulic cylinder – raise left arm pivot point |
| 10 | One-way restrictor valve |

https://truckmanualshub.com/


# 4.0 VOLTO 1050 T hydraulic system

| Item | Designation | Remark |
|---|---|---|
| 1 | Hydraulic cylinders | Actuate the outer arms |
| 2a | Hydraulic cylinder | On the right-hand side arm |
| 2b | Hydraulic cylinder | On the left-hand side arm |
| 3 | Hydraulic cylinders | On the longitudinal beam |
| 4 | Hydraulic cylinders | Chassis |
| 5 | Stroke limiting valve | Is actuated mechanically by the outer arms. Closed in working position and open in transport position. |
| 6 | Pressure sequence valve | After the end of the stroke of hydraulic cylinders (2) and a pressure rise to 130 bar, the hydraulic cylinders (3) are retracted via the pressure sequence valve. |
| 7 | Block-type ball valve | Is actuated by a rope. Open in working position, closed in transport position. |
| 8 | Stroke limiting valve | is closed after hydraulic cylinders (3) have started retracting. |
| 9 | Block-type ball valve | Closed in working position, open in transport position. |
| 10 | Block-type ball valve | Closed in working position, open in transport position. |
| 11 | Flow divider | Distributes the volume flow evenly to the hydraulic cylinders (2a) and (2b) |
| 12 | Flow divider | |
| 13 | Lock-up valve unit | |
| 14 | Port | Double-acting control unit on the tractor (pressure port) |
| 15 | Port | Double-acting control unit on the tractor (tank port) |
| 16 | Port | Single-acting control unit on the tractor |
| | | |
| DW | | double-acting |
| EW | | single-acting |

Working position (single-acting)

When in working position, the hydraulic cylinders (2) are directly controlled by the single-acting additional control unit (EW) on the tractor.
The volume flow here enters at port (16).

Raising/lowering the chassis (single-acting and rope)

- Open the block-type ball valves (9 and 10) using the red rope.
- Actuate the single-acting additional control unit of the tractor so that the volume flow flows via port (16).
- The volume flow flows into the hydraulic cylinders (4) via flow divider (11) and the block-type ball valves (10 and 9) - the chassis is raised.
- To lower the chassis, the single-acting additional control unit of the tractor must be set to the other switching position.

https://truckmanualshub.com/


VOLTO 1050 T

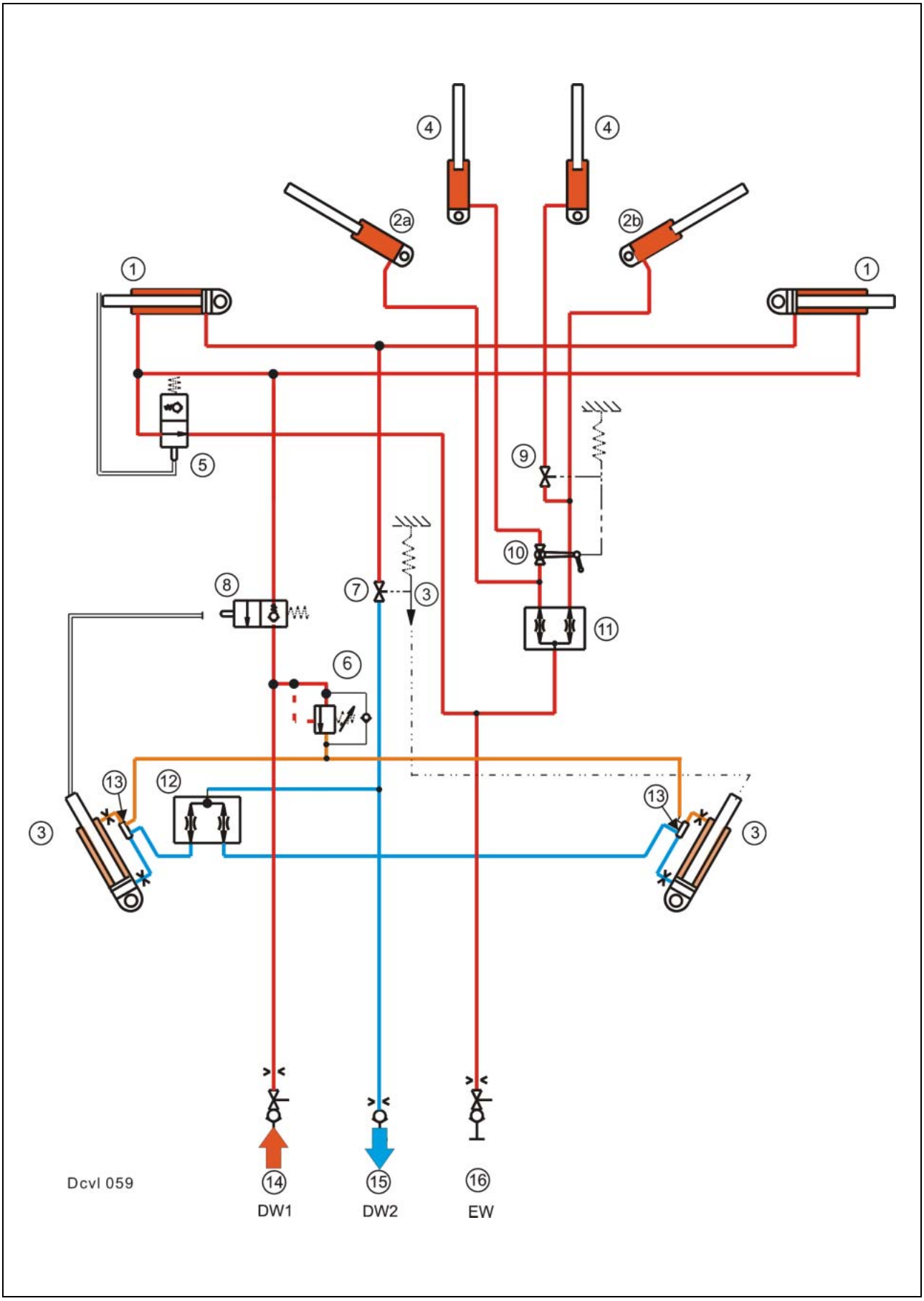

https://truckmanualshub.com/


**Function**

Transport position (DW1)

The following graphics shows the VOLTO 1050T in its complete transport position.

- Actuate the double-acting additional control unit (DW1) of the tractor so that the volume flow flows via port (14).
- The outer arms are retracted by means of hydraulic cylinders (1). When the end position has been reached, the stroke limiting valve (5) opens.
- Volume flow flows into the hydraulic cylinders (2) via the open stroke limiting valve (5) and the flow divider (11).
- While the hydraulic cylinders (2) are extended, the block-type ball valve (7) is closed.
- After the end of the stroke of hydraulic cylinders (2), followed by a pressure rise to 130 bar, the hydraulic cylinders (3) are retracted via the pressure sequence valve.
- When retracting of the hydraulic cylinders (3) has been started, the stroke limiting valve is closed.
- At the end of the raise process of the hydraulic cylinders (3), the side arms come to rest on the supports on the longitudinal beam.
- In this transport position, the side arms are safeguarded by the lock-up valve units (13).

https://truckmanualshub.com/


VOLTO 1050 T

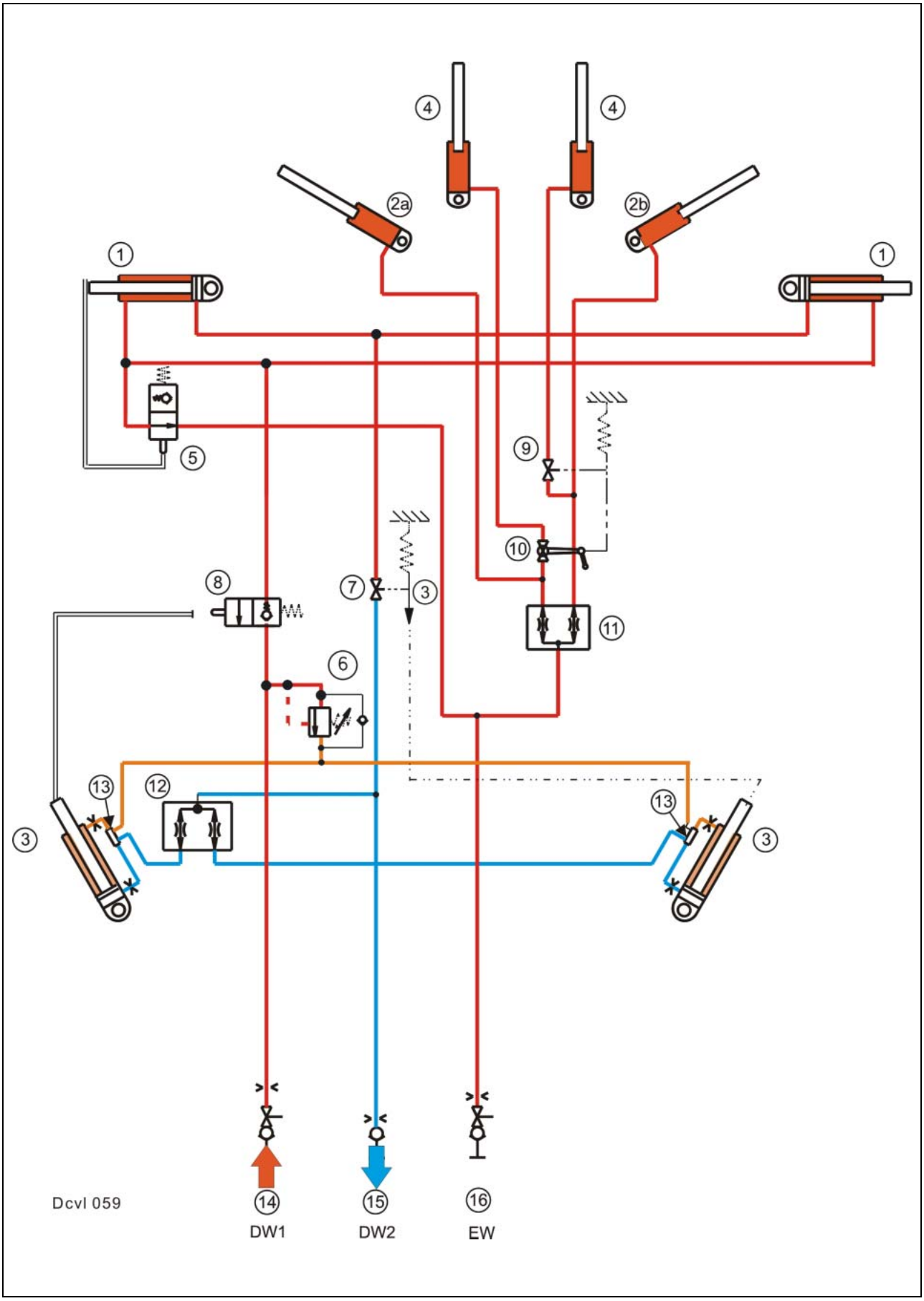

https://truckmanualshub.com/


**Function**

Working position (DW2)

The following graphics shows the VOLTO 1050T in its complete working position.

- Actuate the double-acting additional control unit (DW2) of the tractor so that the volume flow flows via port (15).
- Volume flow goes to hydraulic cylinders (3). This raises the side arms of the longitudinal beams.
- While the hydraulic cylinders (3) extend, the hydraulic cylinders (2) are lowered. The load acting on hydraulic cylinder (2) directs the volume flow via the open stroke limiting valve (5) and port (DW1) into the tank.
- Volume flow goes to the hydraulic cylinders (1) of the outer arms via the open block-type ball valve (7). The outer arms extend.
- While the hydraulic cylinders (1) extend, the block-type ball valve (5) is released and therefore closed.
- The block-type ball valves (9) and (19) are now opened using the rope. This directs volume flow from the hydraulic cylinders (4) into the tank via the stroke limiting valve (5) and port (DW1). The chassis is lowered.

The chassis and the hydraulic cylinders (2) of the side arms can be controlled with the single-acting control unit (port EW) at any time.

https://truckmanualshub.com/


VOLTO 1050 T

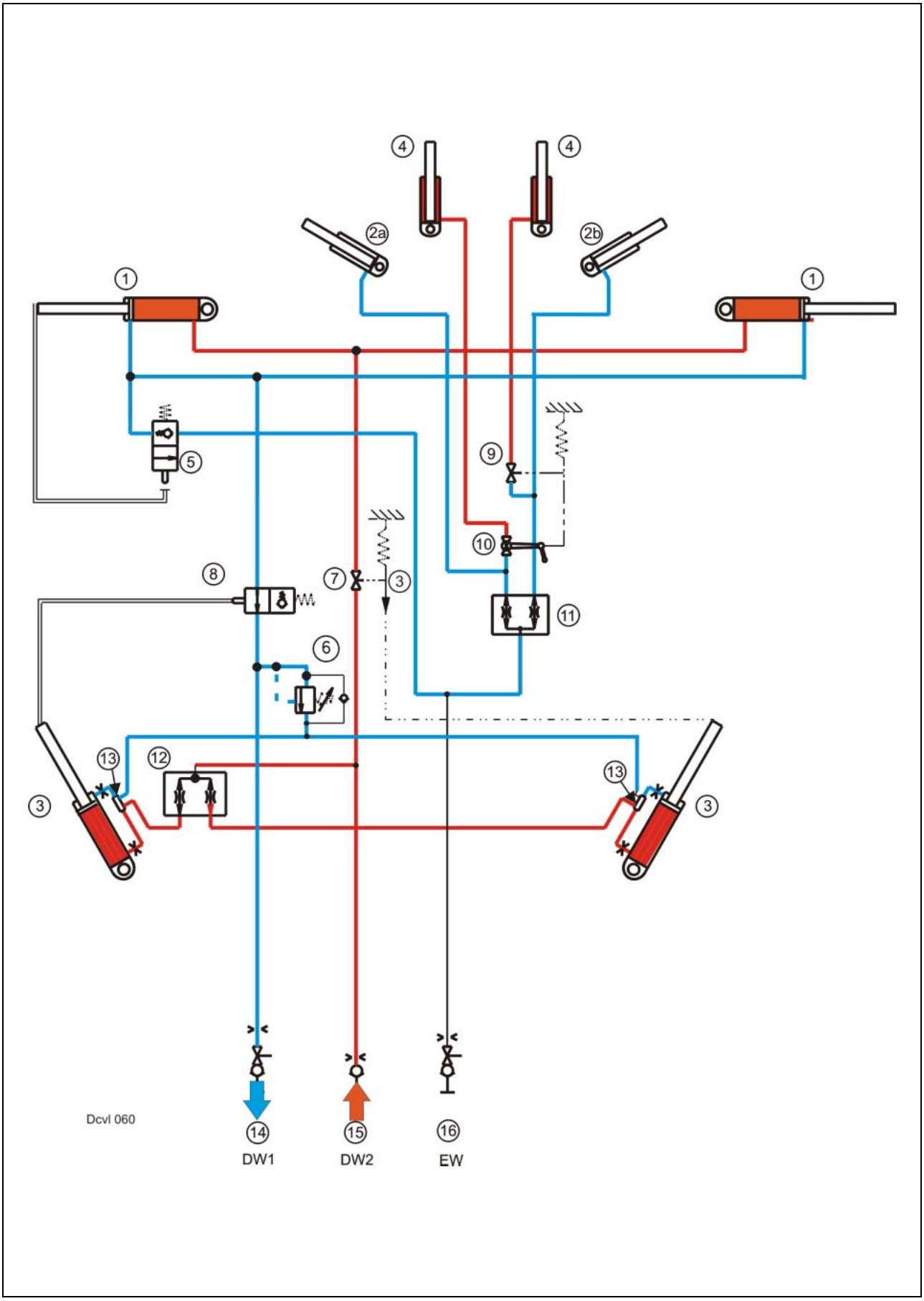

https://truckmanualshub.com/


# 5.0 VOLTO 770 T hydraulic system

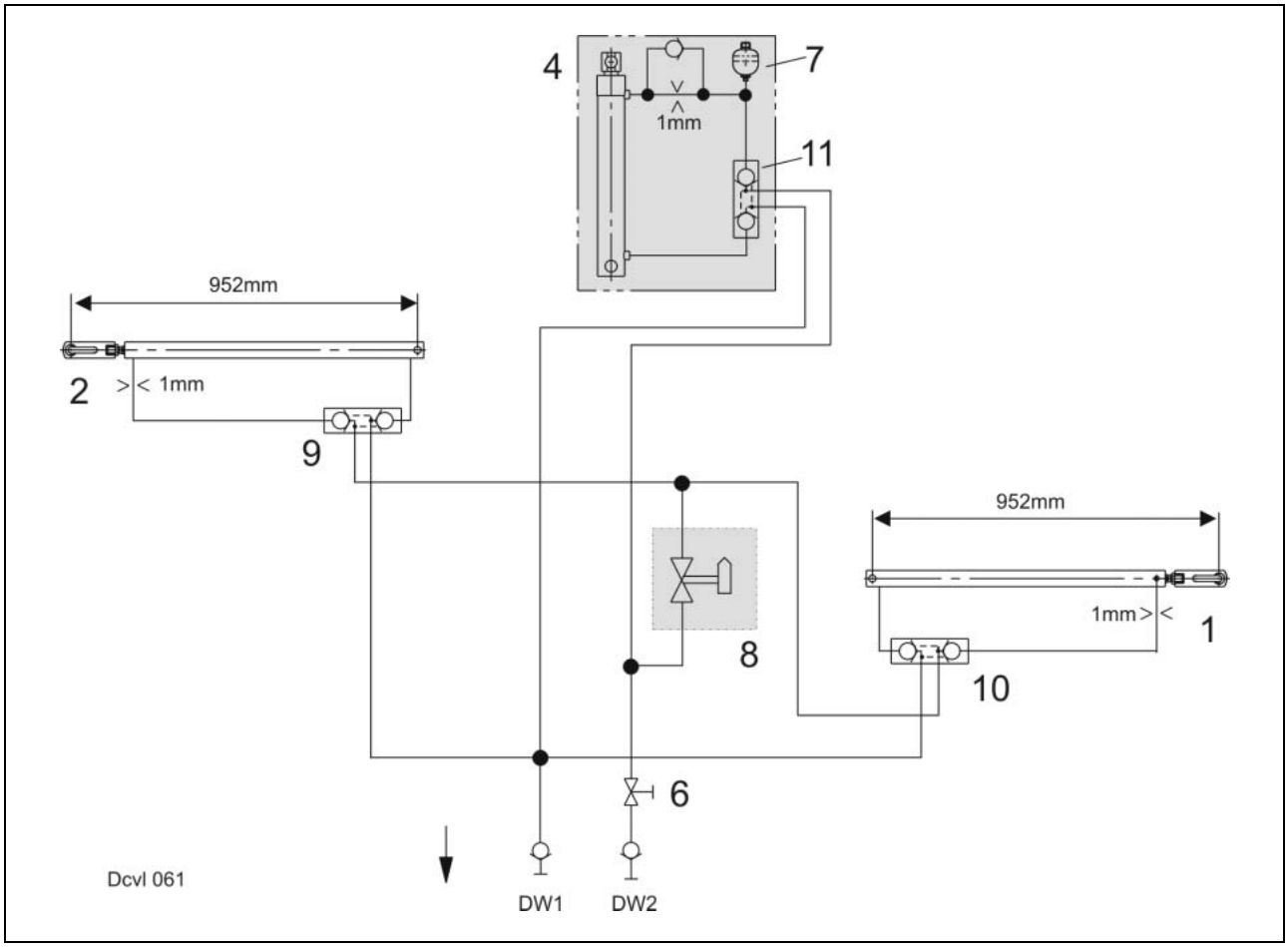


| Item | Designation | Remark |
|---|---|---|
| 1 | Hydraulic cylinders | Actuate the left outer arms |
| 2 | Hydraulic cylinders | Actuate the right outer arms |
| 4 | Hydraulic cylinder | Raises and lowers the chassis |
| 6 | Block-type ball valve | Open while machine is in use. Close for transport. |
| 7 | Accumulator | Pre-stress: 40bar. Volume: 0.16 litres |
| 8 | Block-type ball valve | Must be open when in working position.<br>Closed only during dispatch and repair. |
| 9 | Lock-up valve unit | Prevents uncontrolled movements of hydraulic cylinder under load. |
| 10 | Lock-up valve unit | Prevents uncontrolled movements of hydraulic cylinder under load. |
| 11 | Lock-up valve unit | Prevents uncontrolled movements of hydraulic cylinder under load. |
| | | |
| DW | | of double-acting control unit |
| EW | | of single-acting control unit |

https://truckmanualshub.com/

https://truckmanualshub.com/


# 6.0 VOLTO 670 hydraulic system

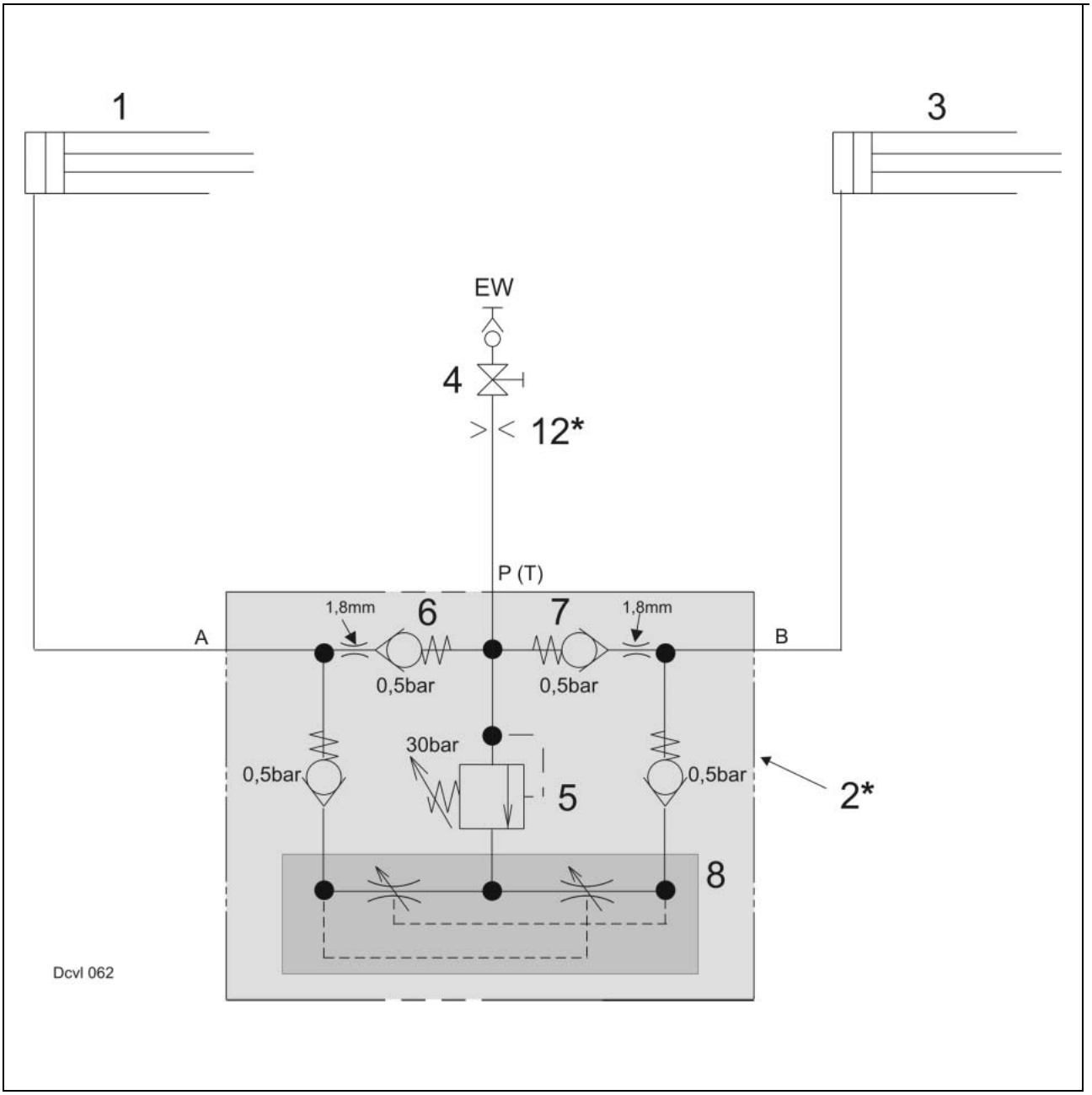


| Item | Designation | Remark |
|---|---|---|
| 1 | Hydraulic cylinder | |
| 2* | Flow divider | Supplied by PISTER. Only on VOLTO with synchronous raising. |
| 3 | Hydraulic cylinder | |
| 4 | Shut-off tap | Open while machine is in use. Close for transport. |
| 5 | Pressure relief valve | Adjusting range 0.. 50 bar, ex-works setting: 30 bar |
| 6 | Non-return valve | |
| 7 | Non-return valve | |
| 8 | Pressure balance | |
| 12* | Orifice plate | Is built into VOLTO 660 without synchronous raising = flow divider (2*) is not provided |
| | | |
| EW | Port | of single-acting control unit |

https://truckmanualshub.com/


Function

The volume flow of pump is directed into the flow divider (2) via an additional control unit of the tractor and port P(T).
This flow divider splits up the incoming volume flow into two equal volume flows that flow to the hydraulic cylinders (1) and (3) via ports (A) and (B). These volume flows are kept constant by a pressure balance (8) in flow divider (2).
This control action also occurs when different loads occur on the hydraulic cylinders (1) and (3), e.g. when working on slopes.
When working or turning on a slope, there are different pressures in the hydraulic cylinders (1) and (3), depending on the position of the implement. The pressure relief valve (5) and two non-return valves prevent a cross-flow from (A) to (B) and vice versa. The extended hydraulic cylinders (1) and (3) thus remain in their positions.
When the hydraulic cylinders (1) and (3) are retracted, oil flows through the non-return valves (6) and (7).
The pressure relief valve (5) is pre-set to 30 bar. To determine the max. possible working pressure and consequently the lifting force, the pressure of the pressure relief valve must be subtracted from the pump pressure (tractor).

Example:

180 bar pump pressure (tractor)
- 30 bar pressure relief valve (5)
150 bar Pressure difference = working pressure = lifting force

https://truckmanualshub.com/


**6.1 Flow divider**

The higher the pressure relief valve (5) is set, the smaller the pressure difference and consequently the lifting force of hydraulic cylinders (3) and (4).

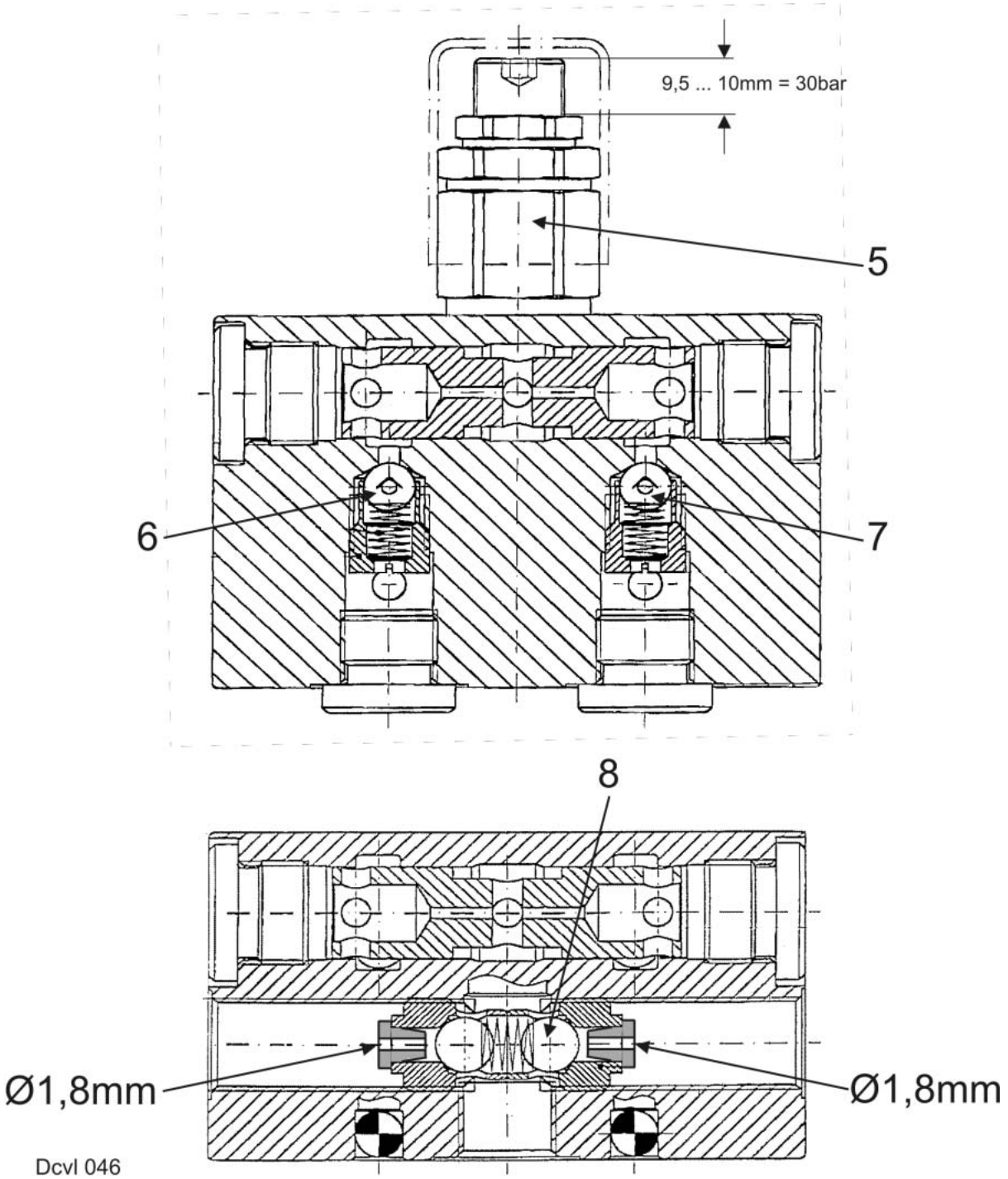

https://truckmanualshub.com/

https://truckmanualshub.com/


# 7.0 VOLTO 770, 770 H hydraulic system

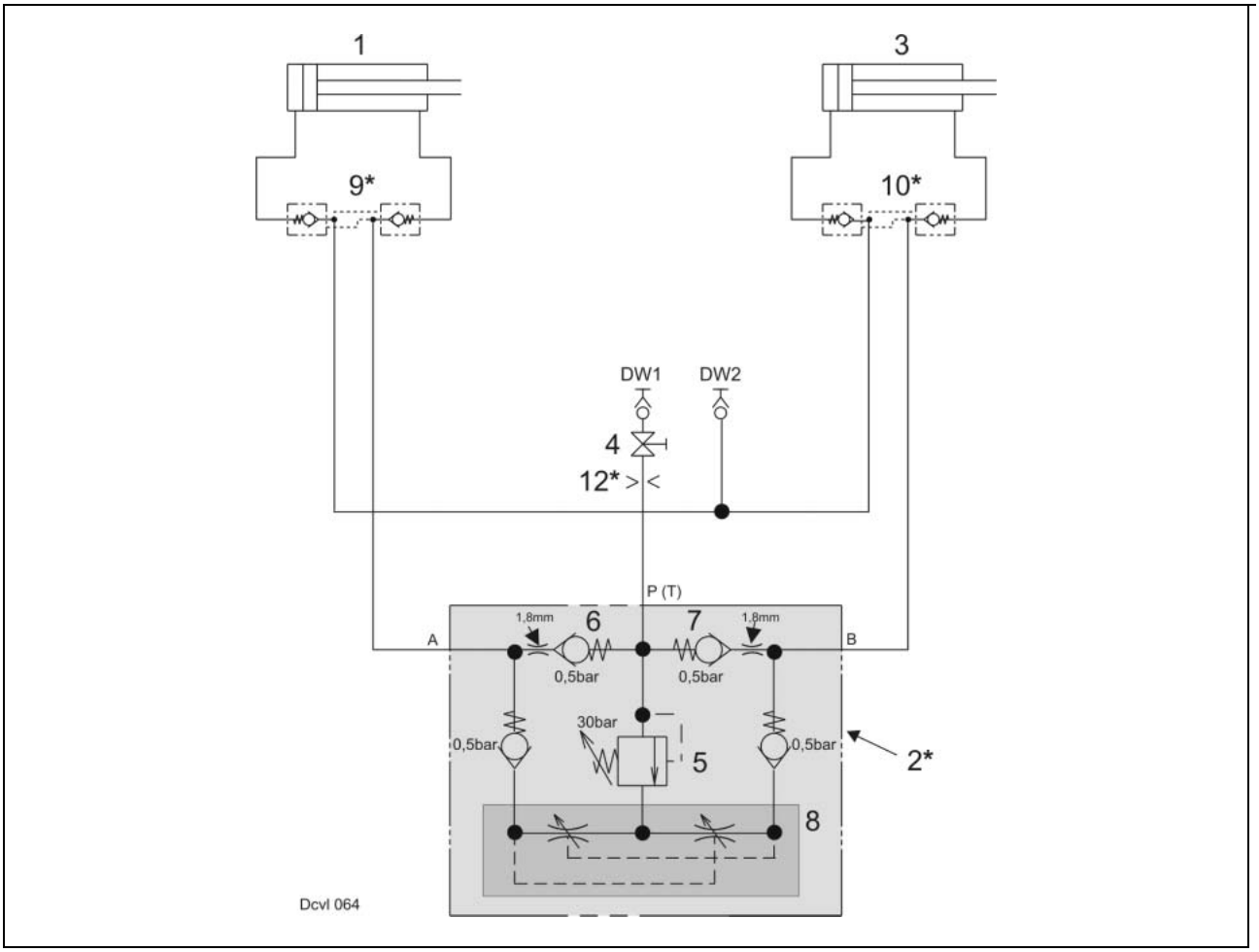


| Item | Designation | Remark |
|---|---|---|
| 1 | Hydraulic cylinder | |
| 2* | Flow divider | Supplied by PISTER. Only on VOLTO with synchronous raising. |
| 3 | Hydraulic cylinder | |
| 4 | Shut-off tap | Open while machine is in use. Close for transport. |
| 5 | Pressure relief valve | Adjusting range 0.. 50 bar, ex-works setting: 30 bar |
| 6 | Non-return valve | |
| 7 | Non-return valve | |
| 8 | Pressure balance | |
| 9* | Lock-up valve unit | From 2004 model |
| 10* | Lock-up valve unit | From 2004 model |
| 12* | Orifice plate | Is built into VOLTO 660 without synchronous raising = flow divider (2*) is not provided |
| | | |
| DW1 | Port | of double-acting control unit |
| DW2 | Port | of double-acting control unit |

https://truckmanualshub.com/


Function

The volume flow of pump is directed into the flow divider (2) via an additional control unit of the tractor and port P(T).
This flow divider splits up the incoming volume flow into two equal volume flows that flow to the hydraulic cylinders (1) and (3) via ports (A) and (B). These volume flows are kept constant by a pressure balance (8) in flow divider (2).
This control action also occurs when different loads occur on the hydraulic cylinders (1) and (3), e.g. when working on slopes.

When working or turning on a slope, there are different pressures in the hydraulic cylinders (1) and (3), depending on the position of the implement. The pressure relief valve (5) and two non-return valves prevent a cross-flow from (A) to (B) and vice versa. The extended hydraulic cylinders (1) and (3) thus remain in their positions.
When the hydraulic cylinders (1) and (3) are retracted, oil flows through the non-return valves (6) and (7).

The pressure relief valve (5) is pre-set to 30 bar. To determine the max. possible working pressure and consequently the lifting force, the pressure of the pressure relief valve must be subtracted from the pump pressure (tractor).

Example:

180 bar pump pressure (tractor)
- 30 bar pressure relief valve (5)
150 bar Pressure difference = working pressure = lifting force

https://truckmanualshub.com/


**7.1 Flow divider**

The higher the pressure relief valve (5) is set, the smaller the pressure difference and consequently the lifting force of hydraulic cylinders (3) and (4).

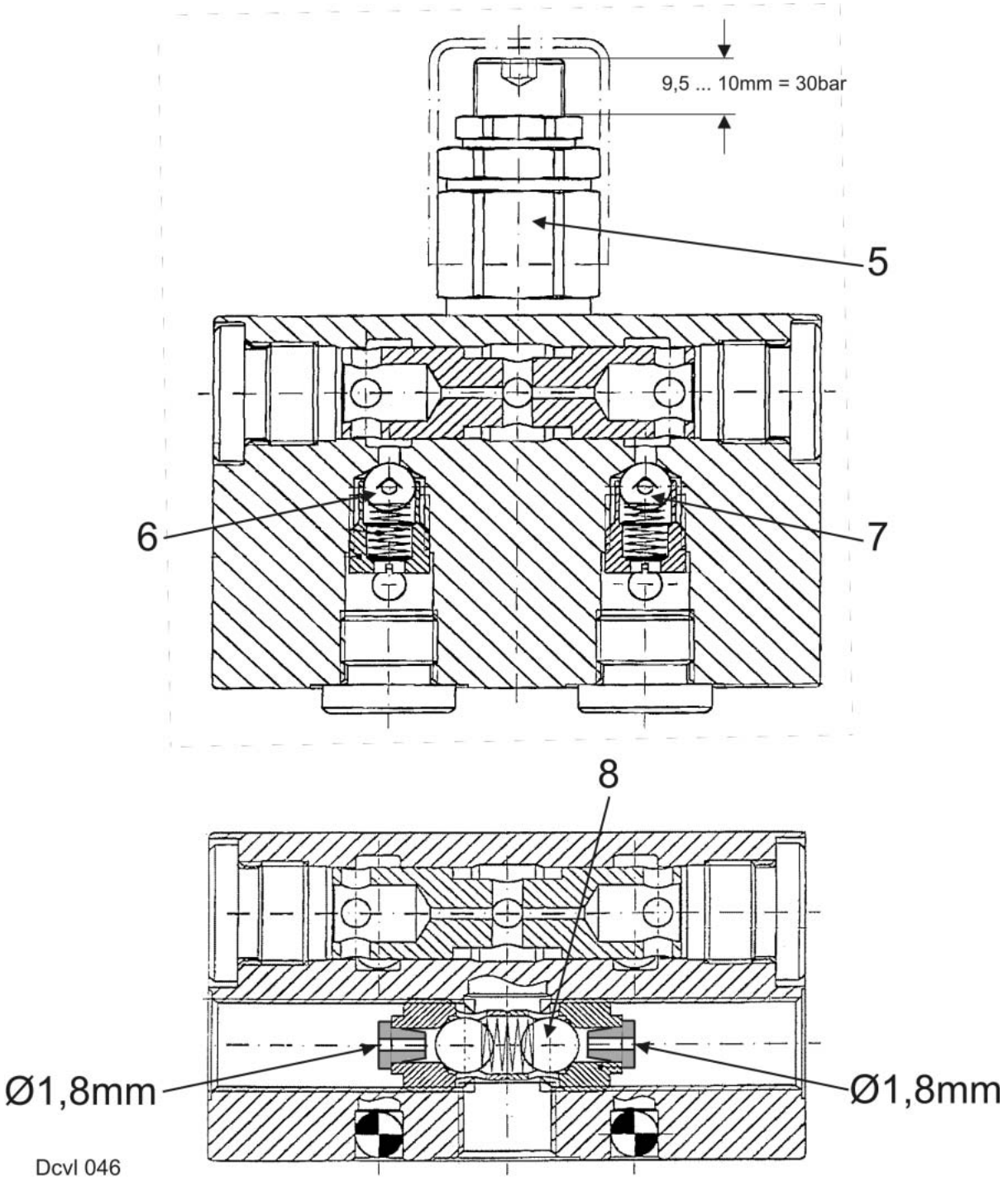

https://truckmanualshub.com/


# 8.0 VOLTO 870 T hydraulic system

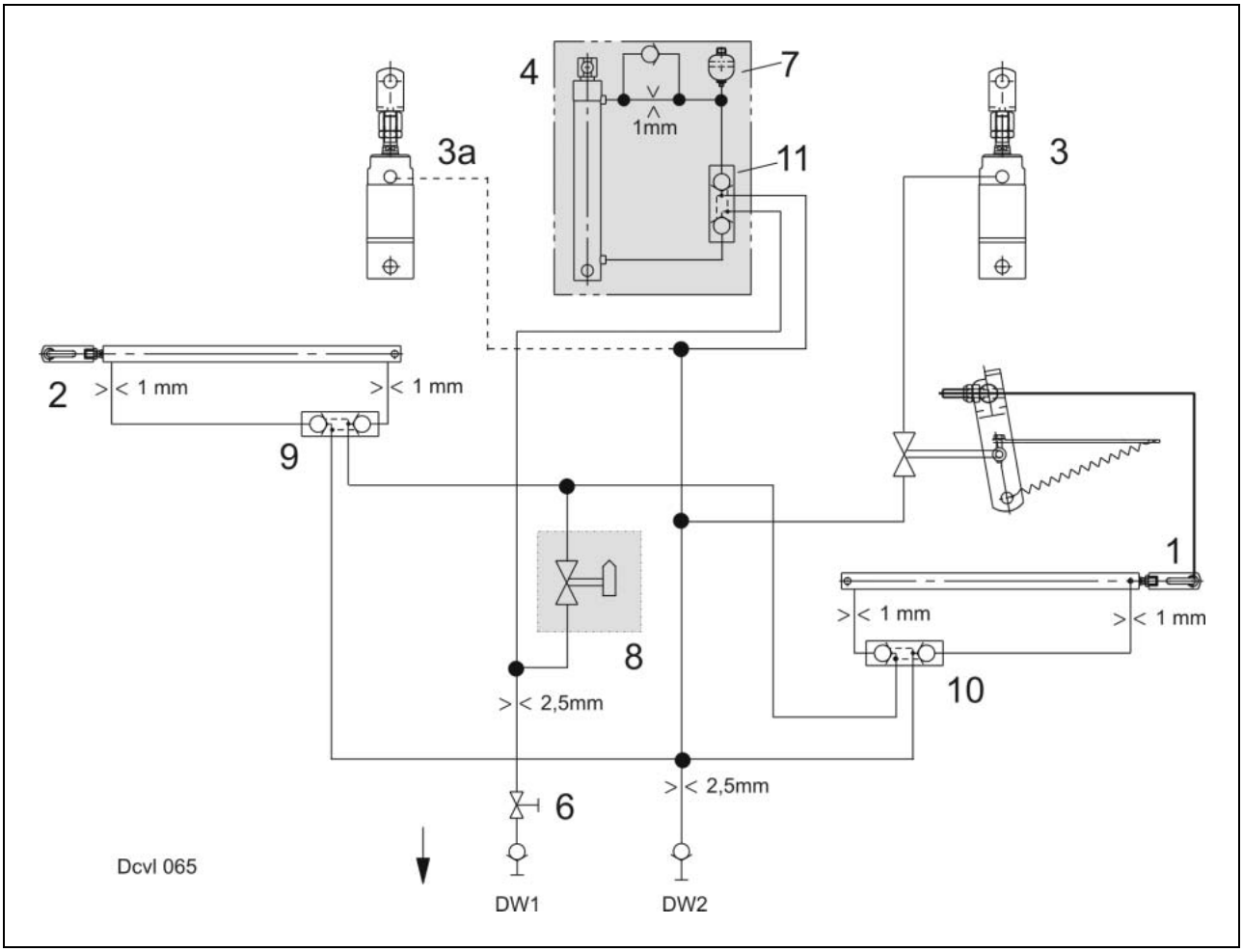


| Item | Designation | Remark |
|---|---|---|
| 1 | Hydraulic cylinder | Actuates the left outer arms |
| 2 | Hydraulic cylinder | Actuates the right outer arms |
| 3 | Hydraulic cylinder | When folding in, it raises the left outer arm off the ground first, thus preventing bent tines |
| 3a | Hydraulic cylinder (option) | Ensures that both outer arms can be raised in parallel (turning area). |
| 4 | Hydraulic cylinder | Raises and lowers the chassis |
| 5 | Block-type ball valve | Is actuated mechanically by the left outer arm. Is open in working position and closed in transport position. |
| 6 | Block-type ball valve | Open while machine is in use. Close for transport. |
| 7 | Accumulator | Pre-stress: 40 bar. Volume: 0.16 litres |
| 8 | Block-type ball valve | Must be open when in working position. Closed only during dispatch and repair. |
| 9 | Lock-up valve unit | Prevents uncontrolled movements of hydraulic cylinder under load. |
| 10 | Lock-up valve unit | Prevents uncontrolled movements of hydraulic cylinder under load. |
| 11 | Lock-up valve unit | Prevents uncontrolled movements of hydraulic cylinder under load. |
| | | |
| DW1 | Port | of double-acting control unit |
| DW2 | Port | of double-acting control unit |

https://truckmanualshub.com/

https://truckmanualshub.com/


**1.0 Hydraulic system circuit diagram for tractor-pulled mower units: DISCO 3000 TC, TRC, AS, FG CORTO 3100, 300, 252, 250.....2**

https://truckmanualshub.com/


# 1.0 Hydraulic system circuit diagram for tractor-pulled mower units:

DISCO 3000 TC, TRC, AS, FG
CORTO 3100, 300, 252, 250

Key to diagram

| | |
|---|---|
| 1 | Chassis cylinder |
| 2 | Chassis cylinder |
| 3 | Drawbar - Swing cylinder |
| 4 | Shut-off tap |
| 5 | Lock-up valve unit |
| 6 | Belt lift cylinder |
| 7 | Belt drive hydraulic pump |
| 8 | Belt drive hydraulic motor |
| 9 | Belt flow control valve |
| 10 | 3/2 way belt shut-down valve |
| 11 | Flap grouper cylinder |
| 12 | TRC lubricating pump |
| 13 | Lubricating pump tank |
| 14 | Lock for flap grouper |

https://truckmanualshub.com/


Tractor-pulled mower units: DISCO 3000 TC, TRC, AS, FG / CORTO 3100, 300, 252, 250

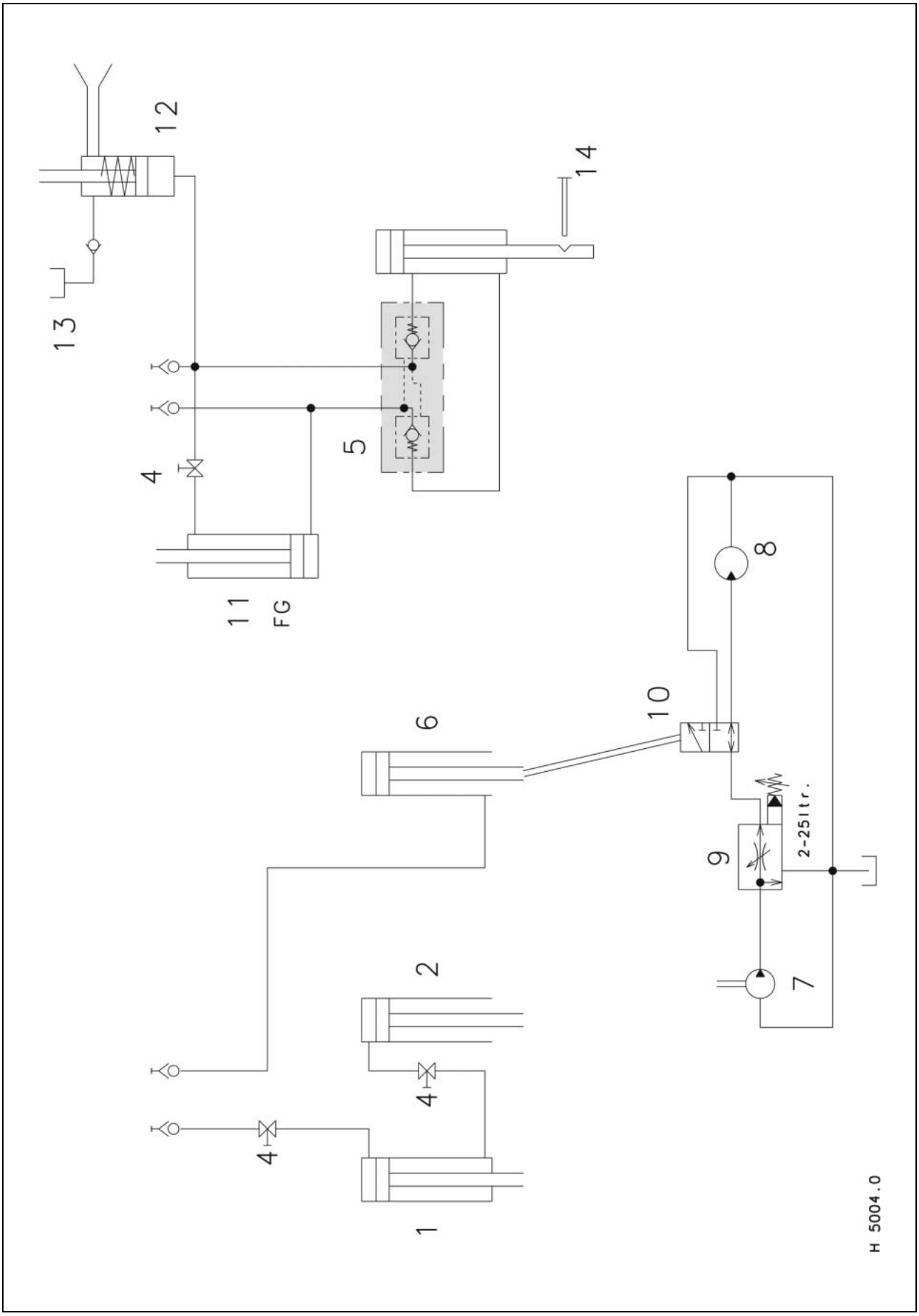

https://truckmanualshub.com/

https://truckmanualshub.com/

At CLAAS KGaA mbH we are constantly improving our products to reflect the latest technological developments. For this reason, we may from time to time need to make changes to diagrams and descriptions in this documentation which do not reflect products which have already been delivered and which will not be implemented on these machines.

Technical data, dimensions and weights are given as an indication only. Responsibility for errors or omissions not accepted.

Reproduction or translation of this publication, in whole or part, is not permitted without the written consent of the CLAAS KGaA mbH.

All rights under the provision of the Copyright Act are reserved.

CLAAS KGaA mbH
33426 Harsewinkel
Germany

Our contribution to the environment:
CLAAS have printed this manual
on 100 % chlorine free paper.

https://truckmanualshub.com/

**CLAAS KGaA mbH**
**Postfach 1163**
**33426 Harsewinkel**
**Tel. +49 (0)5247 12-0**
**www.claas.com**

**0298 211.3**
SYS-DISCO, CORTO, VOLTO,
LINER 8700/8550
EN - 05.05 - NF
Printed in Germany