https://truckmanualshub.com/

S925TX

Mini Skid Steer

Operator's Manual

S925TX_o1_00
Serial No. 101 -
Order No. 105400EM9
Cabled Assembly Order No. 163743991

Vermeer®

EQUIPPED TO DO MORE.®

https://truckmanualshub.com/

Introduction

This manual explains the proper operation of your machine. Study and understand these instructions thoroughly before operating or maintaining the machine. Failure to do so could result in personal injury or equipment damage. Consult your Vermeer dealer if you do not understand the instructions in this manual, or need additional information.

The instructions, illustrations, and specifications in this manual are based on the latest information available at time of publication. Your machine may have product improvements and features not yet contained in this manual.

Vermeer Corporation reserves the right to make changes at any time without notice or obligation.

Operation instructions are included in the two Operator's Manuals provided with the machine. The tethered (cabled) manual must remain attached to the machine for ready reference. Store it in the manual storage box when not in use.

Lubrication and maintenance procedures are in the Maintenance Manual provided with the machine. Refer to it for all lubrication and maintenance procedures.

Additional copies of the manuals, and Operations and Safety video, are available from your dealer. Reorder numbers are listed on the front covers of the manuals and on the video.

Copies of this manual, and the Operations and Safety video, are available in Spanish from your dealer. Other languages may be available.

Su distribuidor dispone de ejemplares en español de este manual y del vídeo de Operaciones y Seguridad.

Notice to Owner

Replacement manuals are free of charge by registering your **used** Vermeer machine. Your machine's Operator's, Maintenance and Parts Manuals may be available online at www.myvermeer.com. For questions about online or printed manuals, or to register a used machine, contact the Customer Data Department by telephone: 800-829-0051 or 641-628-3141; email: customerdata@vermeer.com; internet: www.vermeer.com or www.myvermeer.com; or, letter: Customer Data Dept., Vermeer Corporation, PO Box 200, Pella IA 50219 USA.

https://truckmanualshub.com/

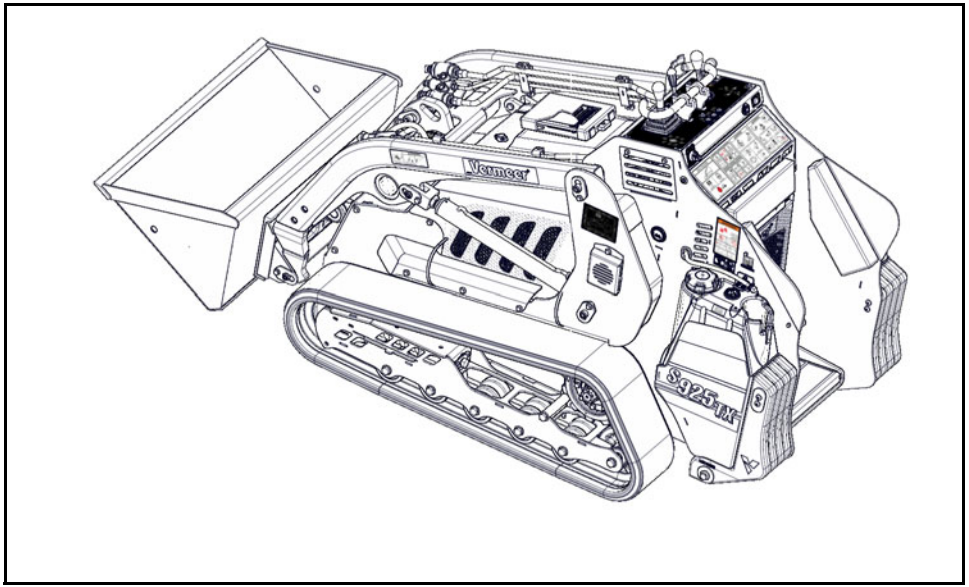

Orientation: Right and left sides of the machine are determined by standing on the operator platform and facing forward.

TRADEMARKS

VERMEER, VERMEER Logo, and EQUIPPED TO DO MORE are trademarks of Vermeer Manufacturing Company.
KUBOTA is a trademark of Kubota Co.
Chevron and Delo are trademarks of Chevron Intellectual property LLC.
Mobil and Delvac are trademarks of Exxon Mobil Corporation.
Shell and Rotella are trademarks of Shell Trademark Management B.V.

https://truckmanualshub.com/

VERMEER NEW INDUSTRIAL EQUIPMENT LIMITED WARRANTY

(EFFECTIVE AUGUST 1, 2013) **WARRANTY PERIOD: 12 Months / 1000 Hours**

Vermeer Corporation (hereinafter "Vermeer") warrants each new Industrial product of Vermeer's manufacture to be free from defects in material and workmanship, under normal use and service for one (1) full year after initial purchase/retail sale or 1000 operating hours, whichever occurs first. This Limited Warranty shall apply only to complete machines of Vermeer's manufacture, parts are covered by a separate Limited Warranty. **EQUIPMENT AND ACCESSORIES NOT OF VERMEER'S MANUFACTURE ARE WARRANTED ONLY TO THE EXTENT OF THE ORIGINAL MANUFACTURER'S WARRANTY AND SUBJECT TO THEIR ALLOWANCE TO VERMEER ONLY IF FOUND DEFECTIVE BY SUCH MANUFACTURER.**

EXTENDED WARRANTY OPTIONS ARE AVAILABLE FOR PURCHASE WARRANTY TERMS During the Limited Warranty period specified above, any defect in material or workmanship in any warranted item of Vermeer Industrial Equipment not excluded below shall be repaired or replaced at Vermeer's option without charge by any authorized independent Vermeer dealer. The warranty repair or replacement must be made by a Vermeer independent authorized dealer at the dealer's location. Vermeer will pay for replacement parts and such authorized dealer's labor in accordance with Vermeer's labor reimbursement policy. Vermeer reserves the right to supply remanufactured replacement parts as it deems appropriate.

RETAIL PURCHASER RESPONSIBILITY: This Limited Warranty requires proper maintenance and periodic inspections of the Industrial Equipment as indicated in the Operator's/Maintenance Manual furnished with each new Industrial Equipment. The cost of routine or required maintenance and services is the responsibility of the retail purchaser. The retail purchaser is required to keep documented evidence that these services were performed. This Vermeer New Industrial Equipment Limited Warranty may be subject to cancellation if the above requirements are not performed. Vermeer Industrial Equipment with known failed or defective parts must be immediately removed from service.

https://truckmanualshub.com/

EXCLUSIONS AND LIMITATIONS

The warranties contained herein shall **NOT APPLY TO:**

(1) Any defect which was caused (in Vermeer's sole judgment) by other than normal use and service of the Industrial Equipment, or by any of the following; (i) accident (ii) misuse or negligence (iii) overloading (iv) lack of reasonable and proper maintenance (v) improper repair or installation (vi) unsuitable storage (vii) non-Vermeer approved alteration or modification (viii) natural calamities (ix) vandalism (x) parts or accessories installed on Industrial Equipment which were not manufactured or installed by Vermeer authorized dealers (xi) the elements (xii) collision or other accident.

(2) Any Industrial Equipment whose identification numbers or marks have been altered or removed or whose hour meter has been altered or tampered with.

(3) Any Industrial Equipment which any of the required or recommended periodic inspection or services have been performed using parts not manufactured or supplied by Vermeer or meeting Vermeer Specifications including, but without limitation, engine tune-up parts, engine oil filters, air filters, hydraulic oil filters, and fuel filters.

(4) New Industrial Equipment delivered to the retail purchaser in which the equipment/warranty registration has not been completed and returned to Vermeer within ten (10) days from the date of purchase.

(5) Any defect which was caused (in Vermeer's sole judgment) by operation of the Industrial Equipment not abiding by standard operating procedures outlined in the Operator's Manual.

(6) Engine, battery, and tire Limited Warranties and support are the responsibility of the respective product's manufacturer.

(7) Transportation costs, if any, of transporting to the Vermeer dealer. Freight costs, if any, of transporting replacement parts to the Vermeer dealer.

(8) The travel time of the Vermeer dealer's service personnel to make a repair on the retail purchaser's site or other location

(9) In no event shall Vermeer's liability exceed the purchase price of the product,

(10) Vermeer shall not be liable to any person under any circumstances for any incidental or consequential damages (including but not limited to, loss of profits, out of service time) occurring for any reason at any time.

(11) Diagnostic and overtime labor premiums are not covered under this Limited Warranty Policy. Oils and fluids are not covered under this Limited Warranty.

https://truckmanualshub.com/

(12) Depreciation damage caused by normal wear, lack of reasonable and proper maintenance, failure to follow operating instructions, misuse, lack of proper protection during storage.
(13) Accessory systems and electronics not of Vermeer's manufacture are warranted only to the extent of such manufacturer's respective Limited Warranty if any.
(14) Down hole toolage is not covered under this warranty.
(15) Wear items which are listed by product group below:

ENVIRONMENTAL: Bearing Seals, Bearings, Belts, Brake Pads, Bolts/Torqued Parts, Chain, Clutches, Clutch Components, Curtains, Cutter Wheels, Discharge Conveyor Belts, Fuel Filters, Hammers, Hoses, Infeed Conveyor Belts, Infeed Conveyor Chains, Knives, Oil Filters, Pockets, Rods, Rollers, Rotor Plates, Screens, Service Items, Shear Bar/Bedknife, Sprockets, Teeth, Wear Blocks, Wear Strips, Tips, Tip Mounts, Track Chain, Track Rollers, Rubber Tracks, Rubber Grouser Bars, Rubber Track Bands, Track Sprockets, Track Pads, Winch Cable, Windshield Wiper Parts, Lights, Antenna.

TRACK: Base Plates, Boom Wear Items, Buckets, Cable Fingers, Conveyor Belts, Clutches, Cups, Digging Chain, Digging Rims, Drums, End Idler, Flashings, Pins and Bushings, Pivot Rings, Plastic Wear Strips, Rooter Bands, Scraper Knives, Sprockets, Teeth, Track Chain, Track Rollers, Trench Cleaner (Crumber), Trip Cleaners, Truck Rollers, Wear Plates.

TRENCHLESS: Brushes, Clamping Vise Parts, Dies, Drive Chuck, Earth Stakes, Fan Belts, Jaws, Leaf Chain, Lights On Light Kits, Packing Assemblies, Rod, Rod Loader Parts, Rollers, Tooling, Track Chain, Track Guides, Track Idlers, Track Pads, Track Sprockets, Valve Seats, Wear Bars, Wear Blocks, Water Hoses, Water Swivels, Wear Bars.

UTILITY PRODUCTS: Augers, Belts, Bearings, Booms, Brake Pads, Bucket, Bushings, Chains, Clutches, Conveyor Belts, End Rollers, Flashings, Pins, Pivot Rings, Plow Blades, Rubber Shielding, Sprockets, Teeth, Tires, Track Chain, Track Idlers, Track Sprockets, Trench Cleaner (Crumber).

PARTS WARRANTY:

Parts replaced in the warranty period will receive the balance of the first year New Industrial Equipment Limited Warranty, during the first (12) months or 1000 hours, whichever comes first. Replacement parts after the original machine warranty, are warranted to be free from defects of material for ninety (90) days or the part will be repaired or replaced, without labor coverage for removal and reinstallation.

https://truckmanualshub.com/

EXCLUSIONS OF WARRANTIES: EXCEPT FOR THE WARRANTIES EXPRESSLY AND SPECIFICALLY MADE HEREIN, VERMEER MAKES NO OTHER WARRANTIES, AND ANY POSSIBLE LIABILITY OF VERMEER HEREINUNDER IS IN LIEU OF ALL OTHER WARRANTIES, EXPRESS, IMPLIED, OR STATUTORY, INCLUDING, BUT NOT LIMITED TO, ANY WARRANTIES OF MERCHANTABILITY OR FITNESS FOR A PARTICULAR PURPOSE. VERMEER RESERVES THE RIGHT TO MODIFY, ALTER AND IMPROVE ANY PRODUCT WITHOUT INCURRING ANY OBLIGATION TO REPLACE ANY PRODUCT PREVIOUSLY SOLD WITH SUCH MODIFICATION. NO PERSON IS AUTHORIZED TO GIVE ANY OTHER WARRANTY, OR TO ASSUME ANY ADDITIONAL OBLIGATION ON VERMEER'S BEHALF.

NO DEALER WARRANTY. The selling dealer makes no warranty of its own and the dealer has no authority to make any representation or promise on behalf of Vermeer or to modify the terms or limitations of this warranty in any way.

ELECTRONIC SIGNATURES. Each of the parties hereto expressly agrees to conduct transactions by electronic means. Accordingly, the parties agree and intend that all electronic transmissions including, without limitation, electronic signatures, shall be considered equivalent to an original writing as provided under Iowa law, as it may be amended from time to time.

MANUFACTURED BY:
VERMEER CORPORATION
Pella, Iowa 50219 USA

https://truckmanualshub.com/

This page intentionally left blank.

https://truckmanualshub.com/

Receiving and Delivery Report

Dealer Prep

Check or perform the following:

___ Check that all optional and loose items are included with the machine.
___ Check that Operator's Manual is cabled to machine.
___ Check air cleaner condition.
___ Check engine oil level.
___ Check engine operation.
___ Check machine lubrication.
___ Check bolts for tightness.
___ Check shield installation and condition.
___ Check that auxiliary attachment drive neutral start interlock functions.
___ Check that *Ground Drive Joystick* and *Attachment Joystick* spring-return to NEUTRAL.
___ Check that Operator Presence system functions.
___ Check that machine does not move when controls are in NEUTRAL and the engine is running at full throttle (operator standing on foot platform).
___ Check that attachment does not tilt with key in OFF position and tilt lever pushed.
___ Check that loader arms do not lower with key in OFF position and lift lever pushed.
___ Check forward and reverse ground drive operation.
___ Check that park brake functions.
___ Check track tension.

https://truckmanualshub.com/

___ Check condition of all safety signs and decals.

___ Check all phases of operation.

Hydraulics

___ Check hydraulic fluid level.

___ Check hydraulic components for leaks or damage.

___ Check hydraulic controls for proper function.

Attachments

___ Check that Operator's Manuals supplied by the attachment manufacturer are in the S925TX manual storage box or in storage box located on the attachment. Bucket attachment instructions are contained in this S925TX Operator's Manual. Contact your authorized Vermeer dealer, or visit www.vermeer.com for information on attachments authorized for use by Vermeer Corporation.

DELIVERY

Check and perform the following with the customer:

___ Review all sections of the Operator's Manual.

___ Grease or oil all lubrication points.

Review and demonstrate with the customer the various aspects of machine operation:

___ overall explanation of how the machine works

___ machine safety

___ preparing the machine for operation

___ operating the machine

https://truckmanualshub.com/

DEALER/OWNER INFORMATION

dealer	owner
address	address
city	city
state / province	state / province
zip / postal code	zip / postal code
country	country
phone number	phone number
email address	email address

https://truckmanualshub.com/

IDENTIFICATION NUMBERS - RECORD

Machine Model Number _____

Machine Serial Number _____

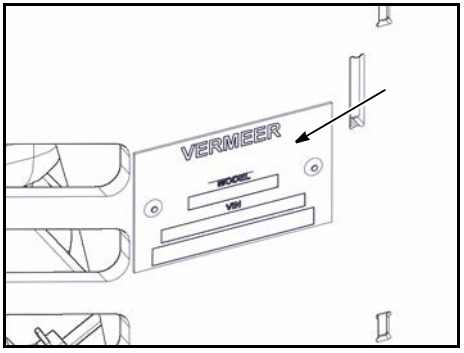

Diesel Engine Model Number _____

Diesel Engine Serial Number _____

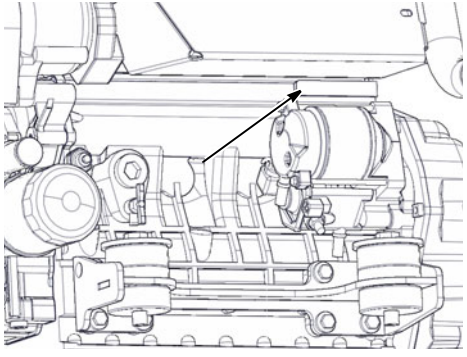

https://truckmanualshub.com/

Gas Engine Model Number _____

Gas Engine Serial Number _____

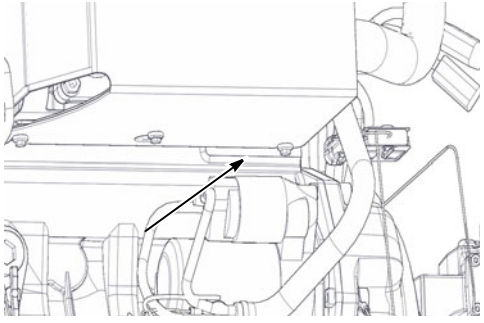

MACHINE IDENTIFICATION DECAL

This decal provides easy identification of the model and 17-digit identification number. The barcode contains the machine's VIN number and can be scanned with any barcode reading device.

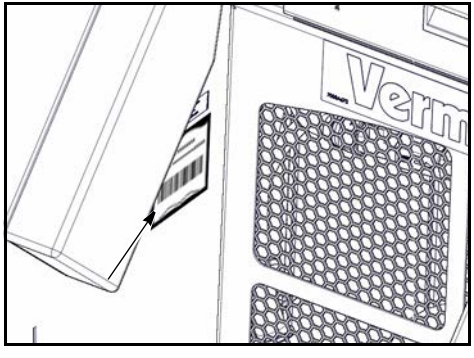

https://truckmanualshub.com/

This page intentionally left blank.

https://truckmanualshub.com/

Table of Contents

Receiving and Delivery Report i
Dealer Prep i
Hydraulics ii
Attachments ii
Delivery ii
Dealer/Owner Information iii
Identification Numbers - Record iv
Machine Identification Decal v

Safety Messages 10-1
Safety Symbol Explanation 10-1
Crystalline Silica 10-5

Welding Precautions 11-1
Welding Alert - Electronic Components 11-1

Fuel Tank Fill 12-1
Diesel Fuel Engines - Sulfur Content 12-1
Gas Engine 12-3

Intended Use 15-1

Emissions Quick Reference Guide 18-1

Controls 20-1
Engine Controls 20-1
Indicator Lights 20-3
Control Station 20-5
Operator Presence System 20-9
Park Brake 20-9
Boom Lift/Attachment Tilt Lockout Override 20-9
Fuses and Relays 20-10
Diesel 20-10
Gas 20-11

Starting Procedure 22-1
Starting the Engine 22-1
Cold Weather Starting 22-2
Engine 22-2
Hydraulic Fluid 22-2
Jump-Starting 22-3
Battery Explosion - Avoid 22-3
Battery Burns - Avoid 22-3
Jump-Starting Procedure 22-5

Shutdown Procedure 23-1

Transporting the Machine 30-1
Loading/Unloading the Machine 30-1
Loading/Unloading 30-2
Driving onto Trailer 30-3
Driving off Trailer 30-5
Loading with Crane 30-6

https://truckmanualshub.com/

Towing the Machine 30-6
Clean Machine 30-9

Preparation. 40-1
Operator Qualifications. 40-1
Operator Presence Switch. 40-1
Personal Protection 40-2
Sound Levels 40-3
Vibration Levels 40-3
Prepare the Area 40-3
Locate Buried Utilities 40-4
Call Your One-Call System First. 40-4
Look for Evidence of Underground Placement. 40-5
Striking a Utility 40-5
Electricity 40-5
Gas 40-6
Fiber Optic 40-6
Jobsite Assessment. 40-6
Prepare the Machine 40-8
Attachments 40-8
Install/Remove. 40-9
Attachment - Install 40-9
Attachment - Remove 40-11
Hydraulics - Attach/Detach 40-12
Hydraulics - Attach 40-13
Hydraulics - Detach 40-13
Auxiliary Low Flow/Tank Port 40-14

Operating the Machine 50-1
Load Capacities 50-1
Driving Safety. 50-1
Before Driving 50-1
While Driving. 50-2
Safe Operating on Slopes. 50-4
Operating the Mini Skid Steer 50-6
Bucket Operation 50-7
Bucket - Install/Remove 50-7
Safety Precautions 50-7
Moving Machine with Load 50-8
Filling the Bucket. 50-8
Digging with the Bucket. 50-9
Emptying the Bucket 50-10
Backdragging with the Bucket. 50-10
Backfilling with the Bucket. 50-11
Operating with Other Vermeer-Authorized Attachments . . .50-11

Maintenance Intervals. 60-1
Safety Sign Maintenance - 100 Hours/Monthly 60-1
Lift Arm Support Bar - Install/Remove 60-2
Maintenance Manual 60-3
Greasing the Machine 60-3
Hourmeter - Check for Maintenance Interval 60-3
Maintenance Interval Schedule 60-4
Attachment Maintenance 60-6

Engine Fault Codes. 62-1
Engine Fault Codes (Gasoline Engine Only) 62-1

Index . . . . . .

https://truckmanualshub.com/

Section 10: Safety Messages

General safety messages appear in this Safety Messages section. Specific safety messages are located in appropriate sections of the manual where a potential hazard may occur if the instructions or procedures are not followed. Messages that are specific to an attachment will be found in the attachment manual.

A signal word "**DANGER**", "**WARNING**", or "**CAUTION**" is used with the safety alert symbol.

Safety signs with signal word "**DANGER**", "**WARNING**", or "**CAUTION**" are located near specific hazards.

DANGER	Indicates a hazardous situation that, if not avoided, will result in death or serious injury.
WARNING	Indicates a hazardous situation that, if not avoided, could result in death or serious injury.
CAUTION	Indicates a hazardous situation that, if not avoided, could result in minor or moderate injury.
NOTICE	Indicates information considered important, but not hazard-related.

Safety Symbol Explanation

This is the safety alert symbol. This symbol is used in combination with an exclamation mark or other symbols to alert you to the potential for death or serious injury.

This symbol indicates that at least one part of the machine is not operating correctly. Shutting down the machine may not be necessary, but some maintenance may be required.

https://truckmanualshub.com/

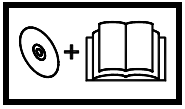

WARNING: Read Operator's Manual and safety signs, and watch the operations and safety video, before operating machine.

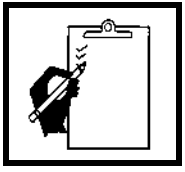

WARNING: Check machine before operating. Machine must be in good operating condition and all safety equipment installed and functioning properly.

WARNING: Wear personal protection equipment. Wear close-fitting clothing and confine long hair. Refer to "Personal Protection," *page 40-2* for additional personal protection requirements.

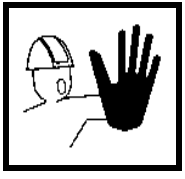

WARNING: Keep spectators away.

WARNING: Engine exhaust can asphyxiate or poison resulting in death or serious injury. Operate machine outdoors. If it is necessary to operate engine in an enclosed area, properly vent exhaust gases.

https://truckmanualshub.com/

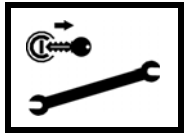

WARNING: Use Shutdown Procedure before servicing, cleaning, repairing, or transporting machine. Follow *Shutdown Procedure*, page *23-1.*

WARNING: Pressurized fluid can penetrate body tissue and result in death or serious injury. Leaks can be invisible. Keep away from any suspected leak. Relieve pressure in the hydraulic system before searching for leaks, disconnecting hoses, or performing any work on the system. If you must pressurize the system to find a suspected leak, use an object such as a piece of wood or cardboard rather than your hands. When loosening a fitting where some residual pressure may exist, slowly loosen the fitting until oil begins to leak. Wait for leaking to stop before disconnecting the fitting. Fluid injected under the skin must be removed immediately by a surgeon familiar with this type of injury.

https://truckmanualshub.com/

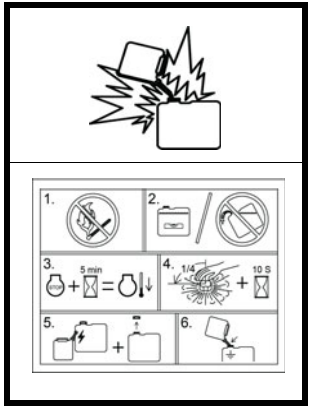

WARNING: Fuel and fumes can explode and burn.

No flame. No smoking. Fill with machine level, do not overfill. Stop engine and let cool for 5 minutes. Turn fuel cap 1/4 turn, wait 10 seconds. Touch spout to tank to discharge static, then remove cap. Keep spout in contact with tank while filling.

WARNING: Moving parts can crush. Keep hands, feet, and clothing away from power-driven parts. Keep shields in place and properly secured.

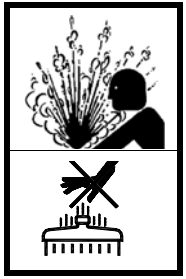

WARNING: Hot fluid under pressure can scald.

Allow engine to cool before opening radiator cap.

https://truckmanualshub.com/

CRYSTALLINE SILICA

WARNING: Silica dust can cause illness.

Breathing crystalline silica dust over time can cause silicosis, a disabling, nonreversible and sometimes fatal disease of the lungs. United States Federal O.S.H.A. has established exposure limits for the jobsite. Avoid exposure to dust containing crystalline silica particles in excess of these limits.

Because crystalline silica is a basic component of sand and granite, many activities at construction sites such as trenching, sawing, and boring of material, produce dust containing crystalline silica. When working in soils containing sand or granite, air monitoring may be necessary to determine whether jobsite conditions expose workers to excessive levels of crystalline silica dust. Depending upon air monitoring results, the following measures may be necessary to avoid exposure to excessive levels of crystalline silica dust:

- Be aware of and follow the guidelines of United States O.S.H.A. 29CFR1926.55, or other applicable regulatory guidelines.
- Reduce dust concentration using water spray or other methods.
- Use a respirator approved for protection from crystalline silica dust.
- If possible, change into disposable or washable work clothes on the jobsite. Shower and change into clean clothing before leaving the jobsite.
- Do not eat, drink, use tobacco products, or apply cosmetics in areas where there is dust containing crystalline silica dust. Wash hands before eating, drinking, or using these products.
- Store food, drink, and personal belongings away from the work area.

https://truckmanualshub.com/

WARNING: Make no modifications to this equipment unless specifically recommended by Vermeer Corporation.

WARNING: Be sure that all safety devices, including shields, are installed and functioning properly after servicing the machine.

WARNING: Failure to follow any of the preceding safety instructions or those that follow within this manual, could result in death or serious injury. This machine is to be used only for those purposes for which it was intended as explained in this Operator's Manual.

https://truckmanualshub.com/

Section 11: Welding Precautions

WELDING ALERT - ELECTRONIC COMPONENTS

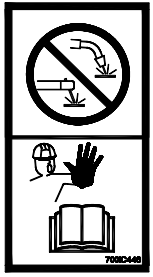

NOTICE: Electronic modules and controllers will be damaged from stray voltages and currents generated during welding if not unplugged **before welding**.

To prevent extensive and costly damage to electrical components:

Step 1: Follow *Shutdown Procedure*, page *23-1.*

Step 2: Disconnect battery cables.

Step 3: Disconnect wire harness (**1**) from engine ECU (gas option only).

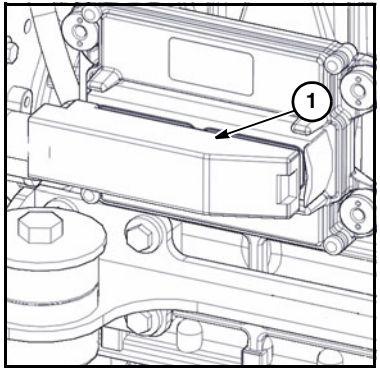

NOTICE: Disconnecting the battery cables will not prevent damage to electronic components during welding. Each of the controllers must have the electrical connector unplugged from the module.

- Clamp welding ground as close to welding location as possible. Do not allow welding current to pass through a bearing or other joints of moving components.
- Do not connect welding ground to any electrical component or controller.
- Protect wiring and wire harness from weld spatter and debris.
- Use proper welding procedures.

NOTICE: Before welding, clean all grease, dirt, oil, moisture, or any other foreign material. Sand paint from the area to be welded.

https://truckmanualshub.com/

This page intentionally left blank.

https://truckmanualshub.com/

Section 12: Fuel Tank Fill

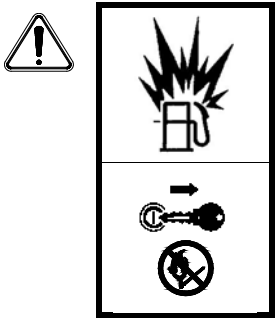

WARNING: Fuel and fumes can explode and burn.

Shut off engine before refueling. No flame. No smoking.

Diesel Fuel Engines - Sulfur Content

Requires Ultra Low Sulfur Diesel (ULSD) fuel, with sulfur content less than 15 ppm (15 mg/kg). Use of fuels other than what is specified in the engine manual will impact engine performance, damage engine emissions systems and may result in engine and exhaust system warranty being voided.

(1) Fuel Cap

(2) Fuel Gauge

NOTICE: Use Ultra Low Sulfur Diesel with sulfur content of less then 15 ppm.

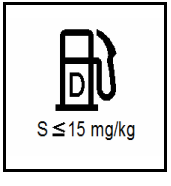

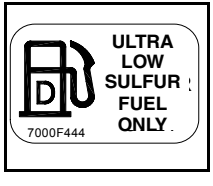

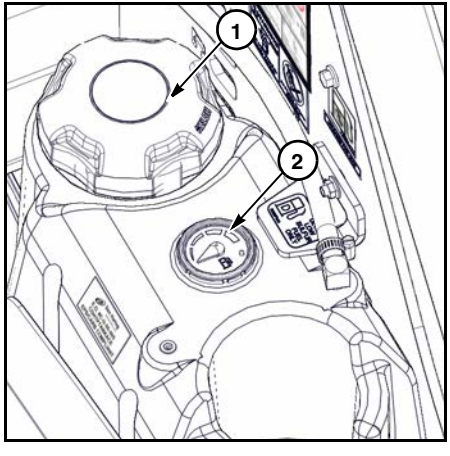

https://truckmanualshub.com/

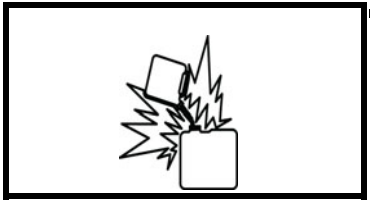

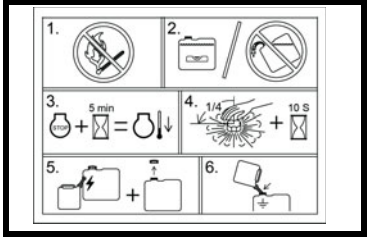

WARNING: Fuel and fumes can explode and burn.

No flame. No smoking. Fill with machine level, do not overfill. Stop engine and let cool for 5 minutes. Turn fuel cap 1/4 turn, wait 10 seconds. Touch spout to tank to discharge static, then remove cap. Keep spout in contact with tank while filling.

Safe Fueling Practices:

- Do not smoke while fueling. Keep all flames and other ignition sources away.
- Fuel the machine on a level surface. Do not overfill. Stop fueling when the fuel level is below the fuel neck. Do not spill fuel onto the exhaust system or engine while fueling. The spilled fuel could create a large amount of vapors that could potentially ignite.
- Shut off engine and wait 5 minutes to allow machine to cool before removing the fuel cap and fueling. The exhaust system and hot engine parts can ignite spilled fuel or vapor.
- Before removing the fuel cap, (A) loosen the cap only 1/4 turn and wait 10 seconds for potential pressurized vapor to release slowly. (B) To prevent a static electric spark from igniting fuel or vapors, touch the fuel nozzle or spout to the machine. (C) Remove the fuel cap. (D) Keep the fuel nozzle or spout in contact with the tank neck while fueling to help prevent static electric buildup.
- Use only approved portable containers with a built-in fuel spout or fill with a grounded fuel nozzle

https://truckmanualshub.com/

- Keep the engine and exhaust system free of debris.
- Use only high quality unleaded gasoline. E10 fuel may be used.

https://truckmanualshub.com/

This page intentionally left blank.

https://truckmanualshub.com/

Section 15: Intended Use

The S925TX Mini Skid Steer can be equipped with a variety of attachments for light and medium duty work. Contact your Vermeer dealer, or visit www.vermeer.com, for information on the list of authorized attachments. The S925TX must not be used with attachments which have not been evaluated by Vermeer Corporation and authorized for use.

WARNING: Using attachments authorized by Vermeer Corporation is important for your safety. Using unauthorized attachments may cause difficulties with steering, stopping, stability and other undesirable performance or handling characteristics. Never use unauthorized attachments.

Always use this machine in accordance with the instructions contained in this manual and the attachment manuals supplied with the attachments; safety signs on the machine and attachments, and other materials provided by Vermeer Corporation and the attachment manufacturers.

Proper maintenance and repair is essential for safety, and efficient machine operation. Do not use the machine if it is not in suitable operating condition.

In addition, ensure new operator is familiar with all the safety signs and control operations.

https://truckmanualshub.com/

This page intentionally left blank.

https://truckmanualshub.com/

Section 18: Emissions Quick Reference Guide

Kubota V1505 25HP and 35HP Diesel Engine	
Engine Oil:	• Low ash oil only: API Classification of CF or Higher, SAE 10W30
Fuel:	• Ultra Low Sulfur Diesel (ULSD) only (S ≤ 15mg\kg)
Aftertreatment:	• Dual DOC only.
Starting:	• Refer to Starting Procedure portion of the manual. • DO NOT use any other cold start aids.
Engine Warm-up:	• Below 32°F (0°C), run engine at low idle speed and allow engine to warm up. • Slow down engine if the hydraulic pump emits noise due to insufficient oil.
Operation:	• To avoid permanent damage, fix all active faults as they occur.
Shutdown:	• Except during an emergency, run at low idle for 2 to 3 minutes before shutting off engine.

ISO Symbol	What it Means	What You Should Know, Do or Not Do
	High Coolant Temperature	Machine will shut down and light illuminates. Check radiator fins, air inlet and screens for obstructions. Check fan belt and coolant level.
	Oil Pressure Low	Stop engine and resolve active faults immediately.

- Refer to machine and Engine Operator's Manual for more information.
- Failure to follow instructions may void engine warranty.

https://truckmanualshub.com/

Display View

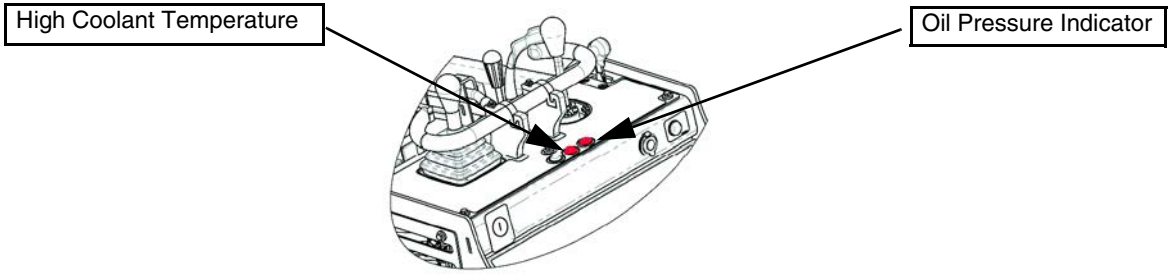

Part Number 163762066 Rev A

https://truckmanualshub.com/

Kubota WG1605 40HP Gas Engine

Engine Oil:	• Low ash oil only: API Classification of CF or Higher, SAE 10W30
Fuel:	• High quality unleaded gasoline. E10 may be used.
Starting:	• Refer to Starting Procedure portion of the manual.
Engine Warm-up:	• Run engine at medium speed for 3 to 5 minutes and allow engine to warm up. • Slow down engine if the hydraulic pump emits noise due to insufficient oil.
Operation:	• To avoid permanent damage, fix all active faults as they occur.
Shutdown:	• Except during an emergency, run at low idle for 2 to 3 minutes before shutting off engine.

ISO Symbol	What it Means	What You Should Know, Do or Not Do
	Engine Indicator Lamp	Immediately stop engine and refer to Engine Operators Manual or contact your Vermeer dealer.
	Malfunction Indicator Lamp	A fault is active and needs to be resolved. Refer to Engine Operator's Manual or contact your Vermeer dealer.

- Refer to machine and Engine Operator's Manual for more information.
- Failure to follow instructions may void engine warranty.

https://truckmanualshub.com/

Display View

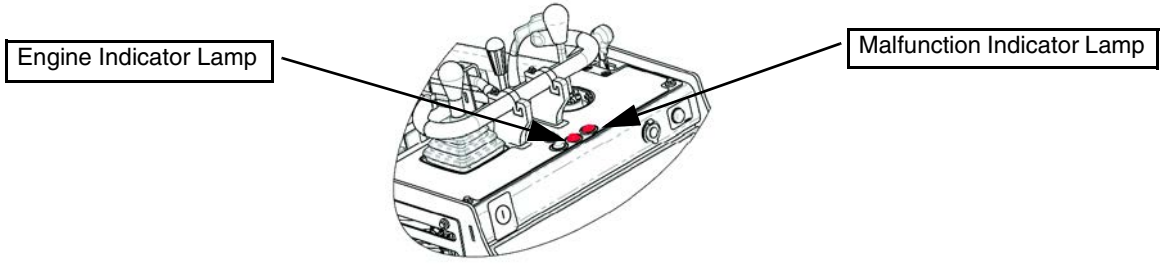

Part Number 163762069 Rev A

https://truckmanualshub.com/

Section 20: Controls

Engine Controls

(1) Ignition Switch

Fully counterclockwise . . . . . STOP; shuts off engine and electrical system

Middle position clockwise . . . . . RUN; turns on electrical system

Fully clockwise. . . . . START; starts engine; Returns to RUN when released

(2) Throttle

Push forward . . . . . increase engine speed

Pull back. . . . . decrease engine speed

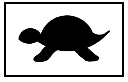

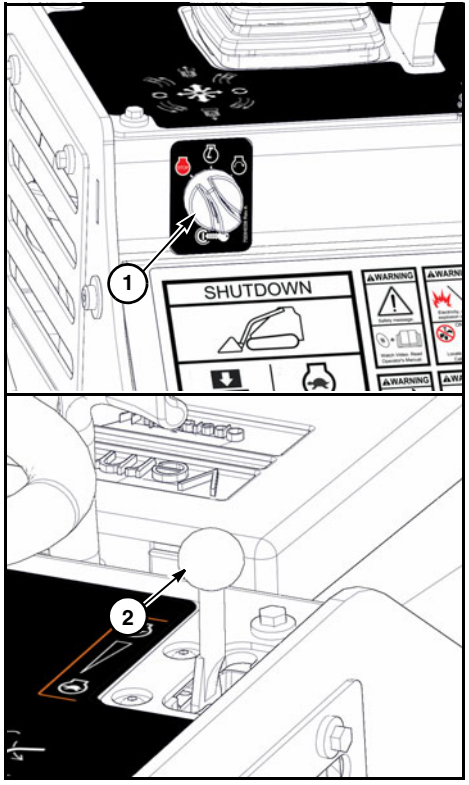

https://truckmanualshub.com/

(3) Glow Plug Button (Diesel Only)
For ambient temperatures below 50°F (10°C) as a starting aid.

(4) 12V DC Auxiliary Electrical Outlet
12V 10 amp available in Key RUN position.

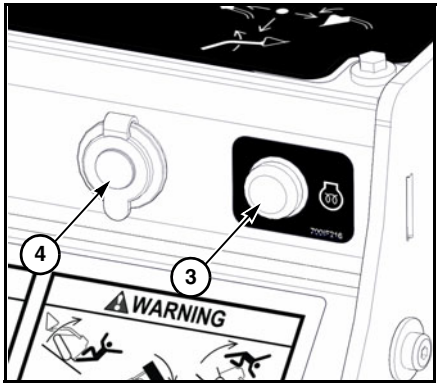

https://truckmanualshub.com/

INDICATOR LIGHTS

X: Indicates symbol not applicable for this machine.

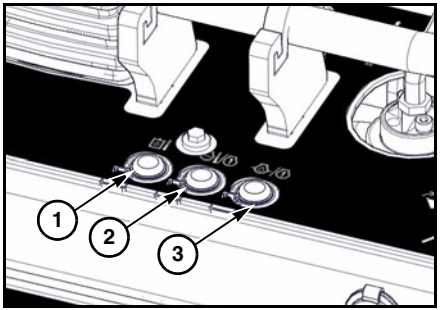

(1) High Hydraulic Oil Temperature Indicator Light
Red light turns on when hydraulic oil becomes too hot. If light turns on during operation, shut off engine and correct the problem.

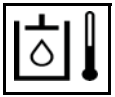

(2) High Engine Temperature (Diesel Engines)
Red light turns on when engine temperature is too high. Shuts down engine.

Machine will not restart until engine cools.

(2) Engine Indicator Light (Gas Engine)
When ignition switch is ON and engine fault is detected, red indicator light will illuminate.

(3) Oil Pressure Indicator Light (Diesel Engines)
Red light monitors engine oil pressure and comes on when the ignition switch is initially turned ON. If the light does not shut off within 30 seconds after starting the engine or comes on during normal operation, shut off the engine and correct the problem

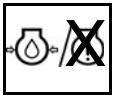

Machine will not restart until engine cools.

https://truckmanualshub.com/

(3) Malfunction Indicator Light (Gas Engine Only)

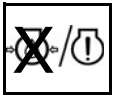

Amber light will flash if malfunction occurs.

1. open side access panel **(4)**.
2. There is a digital display available from your Vermeer servicing dealer.
3. Locate the harness connector behind panel cutout **(4)** shown.

Plug the display into harness connector. Display will read out code numbers. Refer to “Engine Fault Codes,” *page 62-1.*

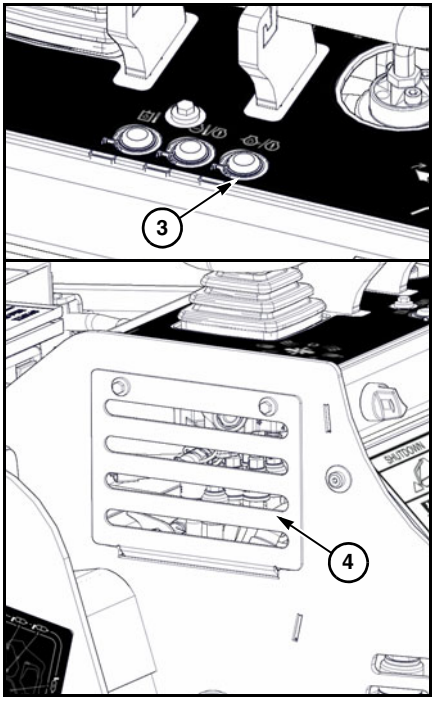

https://truckmanualshub.com/

CONTROL STATION

Handgrip bar **(1)** enables the operator to keep both hands on the bar for stability when using machine. The handgrip bar also provides a steady rest for smooth control of joysticks.

(2) Left Joystick - Ground Drive Controls

Forward . . . . . variable speed forward

Back . . . . . .variable speed reverse

Left. . . . . counter-rotate left

Right. . . . . .counter-rotate right

Forward left . . . . . steers left when moving forward

Forward right. . . . . steers right when moving forward

Back left. . . . . front turns left when moving in reverse

Back right . . . . . front turns right when moving in reverse

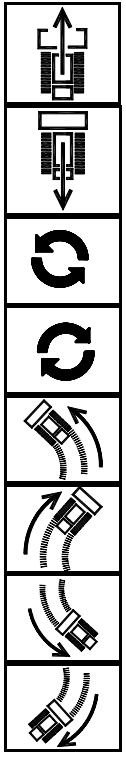

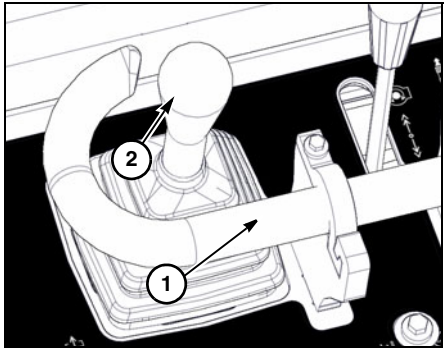

Steering Operation:
Front of machine moves sideways in same direction as control lever is moved when traveling both FORWARD and REVERSE.

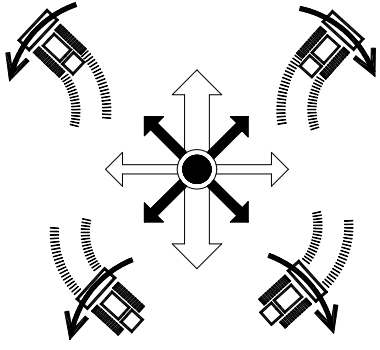

https://truckmanualshub.com/

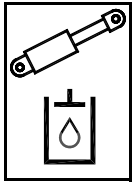

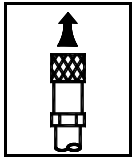

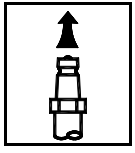

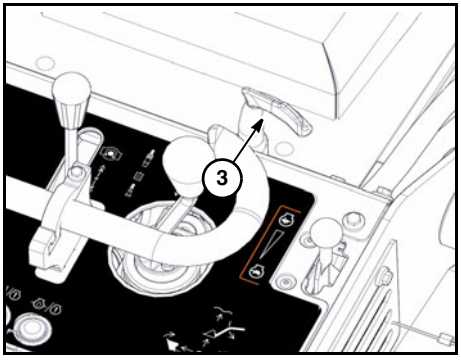

(3) Auxiliary Low Flow Lever

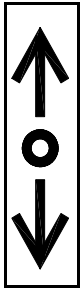

Forward. . . . . .oil flows through female coupler

Center . . . . . .OFF

Back . . . . . oil flows through male coupler

- Lever spring-returns and is intended to be used with attachments requiring closed center valve type functions (such as a cylinder).
- (35 hp and 40 hp machines) Maximum hydraulic flow through this valve is 8.1 gpm (31 L/min) at 3045 psi (21 MPa) (210 bar).
- (25 hp machines) Maximum hydraulic flow through this valve is 6.8 gpm (25.7 L/min) at 3045 psi (21 MPa) (210 bar).

https://truckmanualshub.com/

(4) Auxiliary Attachment Drive Lever

- Lever is detented in full-forward and full-reverse positions. Lever must return to NEUTRAL after starting before operating attachment.
- (35 hp and 40 hp machines) Maximum hydraulic flow through this valve is 15.5 gpm (58.7 L/min) at 3045 psi (21 MPa) (210 bar).
- (25 hp machines) Maximum hydraulic flow through this valve is 12 gpm (45.4 L/min) at 3045 psi (21 MPa) 210 bar).

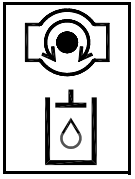

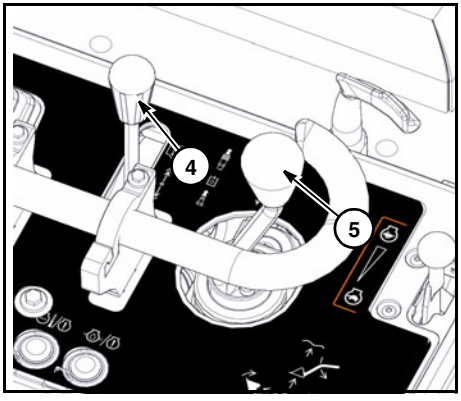

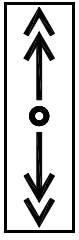

Forward . . . . . oil flows through female coupler

Center. . . . . .NEUTRAL

Back . . . . . .oil flows through male coupler

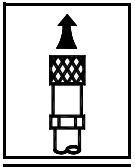

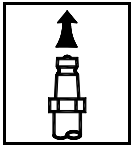

https://truckmanualshub.com/

(5) Right Joystick - Lift/Tilt Controls

Fully forward . . . . . lower boom

Forward to detent. . . . . .boom FLOAT

Back . . . . . .raise boom

Right . . . . . tilt attachment forward

Left . . . . . .tilt attachment back

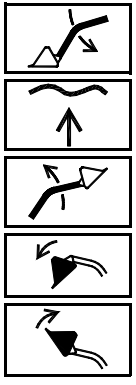

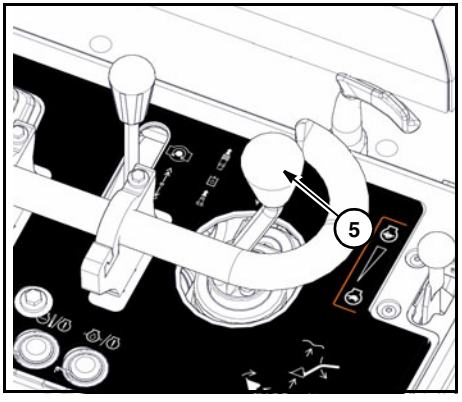

https://truckmanualshub.com/

Operator Presence System

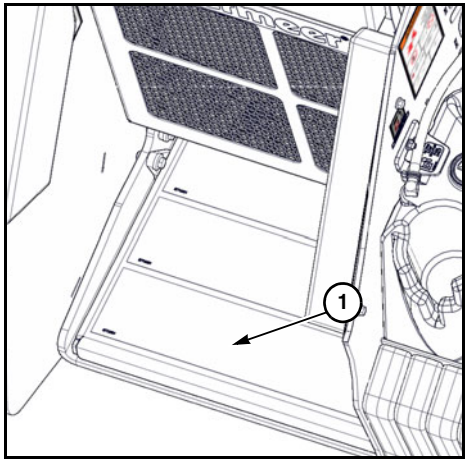

The Operator Presence system uses a switch in the operator platform to detect the presence of an operator. The operator must be standing on the operator presence foot plate **(1)** for the ground drive, lift/tilt functions, or auxiliary attachment drive to be engaged.

If the operator leaves the platform while the ground drive, lift/tilt functions, and/or attachment drive are engaged, these functions will stop. If *Lift / Tilt Joystick* is in FLOAT, it will continue to lower/float. The *Auxiliary Attachment Drive Lever* must be returned to NEUTRAL before the attachment drive can be re-engaged.

The Operator Presence system is intended for your safety and must be maintained in good functional condition. Contact your Vermeer dealer if it does not function correctly.

Park Brake

A spring-applied, hydraulic-released park brake engages the left track when the engine is OFF or the operator leaves the platform with the engine on. Machine can travel up to 4" (10 cm) before the brake will engage.

Boom Lift/Attachment Tilt Lockout Override

On a non-functioning machine, lower boom and tilt attachment by standing on operator platform, turning the ignition key to the RUN position and then moving the *Lift / Tilt Joystick*. In case of a discharged battery, connect jumper battery to the discharged battery posts. Refer to “Jump-Starting Procedure,” *page 22-5.*

https://truckmanualshub.com/

Fuses and Relays

Fuses and relays protect electrical circuits and are located in the engine compartment. Replace fuses with the correct rating to prevent damaging electrical system.

Diesel

Item	Fuse Location	Function
1	**(F1)** 10A	Ignition Switch
2	**(F2)** 20A	Switch Power
3	**(F3)** 20A	Starter Solenoid
4	**(F4)** 30A	Glow Plug
5	**(F5)** 10A	12V Aux

Relay Location	Function
(A) K1	Starter Relay
(B) K2	Main Power Relay
(C) K3	Neutral Start Lock Relay
(D) K4	Latch Relay
(E) K5	Glow Plug relay
(F) K6	High Temp Relay

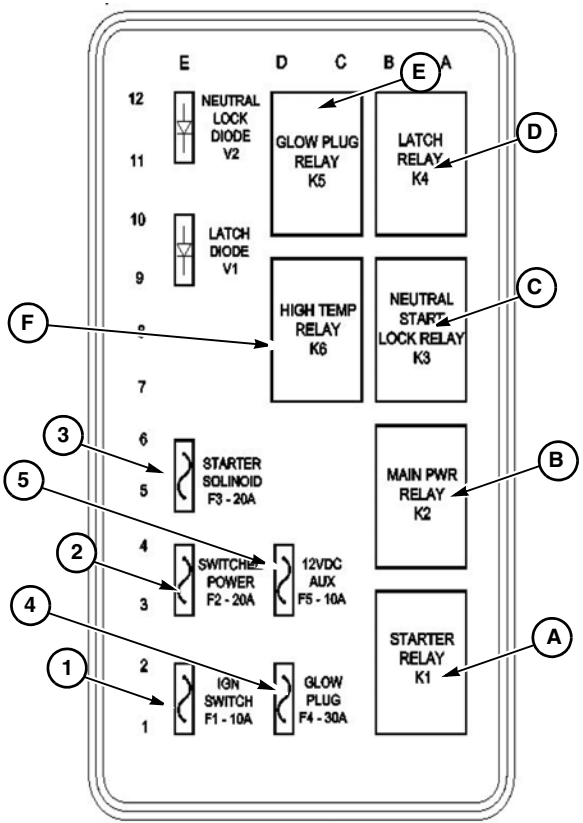

https://truckmanualshub.com/

Gas

Item	Fuse Location	Function
1	**(F1)** 10A	Ignition Switch
2	**(F2)** 20A	Switch Power
3	**(F9)** 5A	Starter Solenoid
4	**(F5)** 10A	12V Aux

Relay Location	Function
(A) K1	Starter Relay
(B) K2	Main Power Relay
(C) K3	Neutral Start Lock Relay
(D) K4	Latch Relay

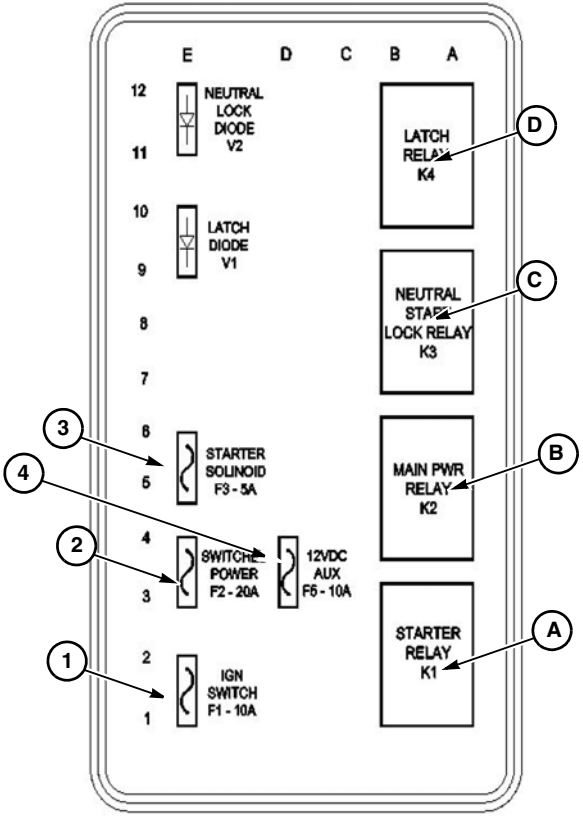

https://truckmanualshub.com/

This page intentionally left blank.

https://truckmanualshub.com/

Section 22: Starting Procedure

Starting the Engine

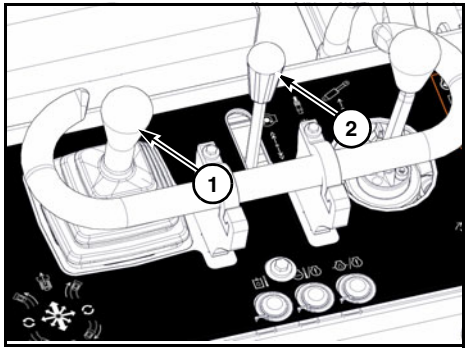

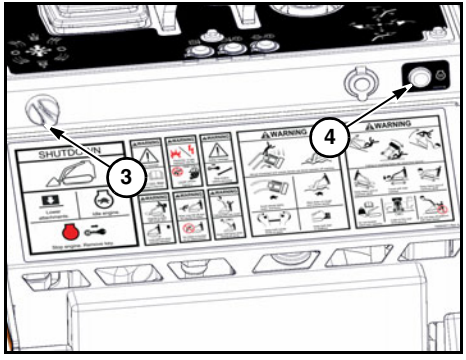

Step 1: Stand with both feet on operator platform.

Step 2: Ensure *Ground Drive Joystick* **(1)** is in NEUTRAL.

Step 3: Move *Auxiliary Attachment Drive Lever* **(2)** to NEUTRAL.

Step 4: Move ignition switch to RUN position.

Step 5: (Diesel engine machines) If ambient temperature is below 50°F (10°C), press and hold *Glow Plug Button* (**4**) for 10–15 seconds before starting the machine. Continue to hold the Glow Plug Button until engine starts.

Step 6: Turn ignition switch **(3)** to START position; release when engine starts.

NOTICE: If engine does not start within 10 seconds, turn key OFF, wait 30 seconds, then begin engine starting sequence over again. Do not allow the starter motor to run continuously for more than 10 seconds.

If oil indicator light does not shut off after engine starts, shut off engine and correct problem.

Step 7: Do not operate the engine under load until engine has warmed up.

Refer to the Engine Operation Manual for detailed information.

https://truckmanualshub.com/

Cold Weather Starting

Engine

CAUTION: Handheld aerosol starting aid use can cause explosion. Personal injury is possible from flying debris and fire. Do not use handheld aerosol starting aids such as ether.

NOTICE: Handheld aerosol starting aid can cause explosion. Engine damage is possible. Do not use handheld aerosol starting aids such as ether.

Refer to Steps 5–7, page 22-1, for cold-weather starting (Diesel). Whenever temperature drops below 5°F (-15°C), remove battery from machine and store indoors until next machine use.

- An electric block heater is available from your Vermeer Dealer.
- Refer to the Engine Operation Manual for recommendations and procedures for use of cold weather starting aids.

Hydraulic Fluid

Allow adequate time for hydraulic oil to warm up, especially in cold weather. Refer to the *Specifications* section of the *Maintenance Manual* for recommended hydraulic fluids.

NOTICE: Reduce engine speed if hydraulic pump squeals, indicating lack of oil which can damage the pump.

https://truckmanualshub.com/

JUMP-STARTING

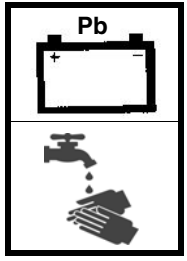

WARNING: Battery post, terminals, and related accessories contain lead and lead compounds, chemicals known to the state of California to cause cancer and reproductive harm.

Wash hands after handling.

Battery Explosion - Avoid

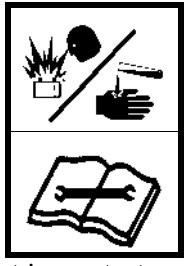

WARNING: Battery fumes are flammable and can explode. Keep all burning materials away from battery. Battery explosion can blind. Acid can blind and burn. Tools and cable clamps can make sparks.

Do not smoke. Shield eyes and face. Read instructions.

Do not jump-start or charge a battery that is frozen or low on electrolyte.

Do not allow vehicle used to jump-start to be in contact with the disabled machine. Vehicles in contact have a ground connection which allows a spark to occur at the battery when the positive jumper cable is connected or removed. If equipped with battery caps, they must be in place and tight to reduce risk of battery explosion.

NOTICE: Use only a 12-volt system for jump-starting.

Battery Burns - Avoid

Battery contains sulfuric acid which can cause severe burns. Avoid contact with eyes, skin, and clothing.

https://truckmanualshub.com/

In case of acid contact:

External: Flush with plenty of water. If eyes have been exposed flush with water for 15 minutes and get prompt medical attention.

Internal: Drink large quantities of water or milk, follow with milk of magnesia, beaten egg, or vegetable oil. Call a physician immediately.

https://truckmanualshub.com/

Jump-Starting Procedure

Step 1: Turn ignition switch to OFF.

Step 2: Open engine access door **(1)**.

Step 3: Connect jumper cables in the following order:

a. Red to discharged battery POSITIVE (+) terminal **(2)**.

b. Red to boost battery POSITIVE (+) terminal **(3)**.

c. Black to boost battery NEGATIVE (-) terminal **(4)**.

d. Black to frame **(5)** of machine with the discharged battery. Make connection away from battery, hydraulic lines, and moving parts.

NOTICE: To avoid sparks, disconnect black cable at point **(5)** before adjusting red cable at point **(2)**.

Step 4: Start engine.

Step 5: Remove cables in REVERSE order and install covers over cable clamps. Close and latch engine access door.

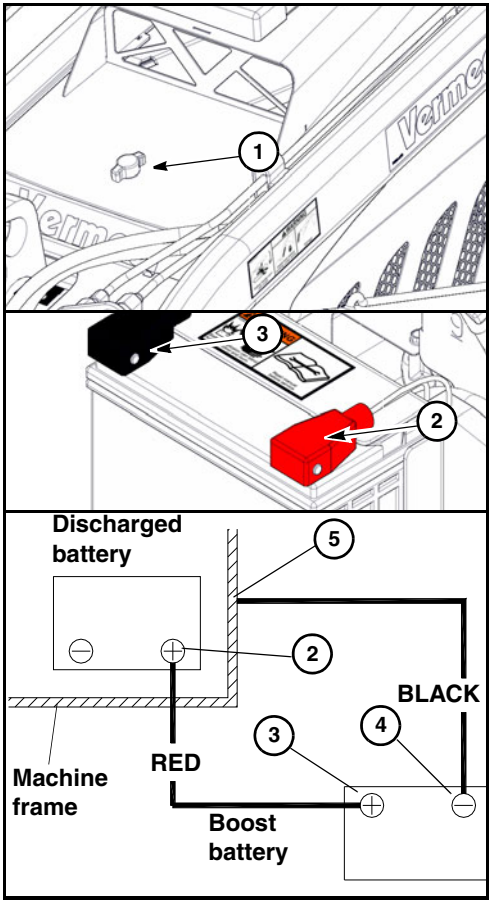

https://truckmanualshub.com/

This page intentionally left blank.

https://truckmanualshub.com/

Section 23: Shutdown Procedure

- For your safety and the safety of others, use the shutdown procedure before working on the machine for any reason, including servicing, cleaning, or inspecting the machine.

Step 1: Park machine on a level surface.

Step 2: Move *Ground Drive Joystick* to NEUTRAL.

Step 3: Move *Auxiliary Attachment Drive Lever* to NEUTRAL.

Step 4: Fully lower attachment onto the ground.

Step 5: Move *Throttle* to low position and allow engine to idle for 1 to 5 minutes before shutting down.

Please consult machine's engine manual for shutdown details.

Step 6: Shut off engine and remove key.

A variation of the above procedure may be used if so instructed within this manual or if an emergency requires it.

Park brake will engage when operator steps off platform or engine is shut off and spring-applied park brake pin is aligned between sprocket teeth.

https://truckmanualshub.com/

This page intentionally left blank.

https://truckmanualshub.com/

Section 30: Transporting the Machine

LOADING/UNLOADING THE MACHINE

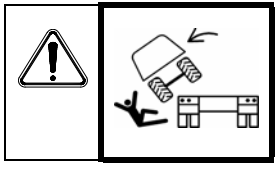

WARNING: Unintended machine movement may occur when loading or unloading on slippery, dirty or uneven trailer surfaces. Death or serious injury can result if struck or crushed by machine. Ensure trailer is level and all loading surfaces are clean and free of debris. Do not attempt to load onto slippery trailer surfaces. Use smooth and controlled steering movements.

- Read the towing vehicle and trailer manuals for safety precautions and information.
- Ensure gross weight of the machine with attachments is within the weight limits of the trailer and towing vehicle.
- Properly attach trailer to towing vehicle and chock wheels or set park brake of towing vehicle.
- Ensure you are qualified to operate the machine. Refer to “Operator Qualifications,” *page 40-1.*
- Keep attachment(s) as low as practical while loading and unloading.
- Slowly drive machine on and off trailer squarely to minimize steering.
- Do not attempt to steer machine when balanced at trailer/ramp transition.
- Position machine at location for tie-downs and weight distribution as recommended by trailer manufacturer.

See “Machine Specifications” in the *Maintenance Manual* for tractor weights.

https://truckmanualshub.com/

Loading/Unloading

- Back up the ramp while loading, and drive forward down the ramp while unloading when there is a light attachment on the front weighing less than 200 lb (90 kg), such as a standard bucket or forks, or when the attachment has been removed. Driving with operator downhill may result in machine tipping backward.
- Drive forward up the ramp while loading, and back down the ramp while unloading when there is a heavier attachment on the front. Driving with the heavy attachment downhill may result in machine tipping forward.
- Always travel on ramp with attachment as low as practical.
- Never stop or start suddenly while on ramp. Sudden stopping or starting may result in tipping forward or backward. Drive slowly and smoothly while on ramp.
- Avoid steering on ramps. Steering may cause machine to turn suddenly and fall off ramp, or cause ramp to move and fall.
- Position machine and attachments to provide the trailer tongue load recommended by the trailer manufacturer.
- Securely attach loose attachments and machine to trailer.

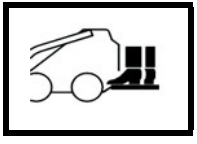

WARNING: Operator's leg can be crushed if machine is moved rearward while standing on the ground. Operator Presence foot plate must function properly. Never move machine with one or both feet on the ground. Keep both feet on the foot plate.

WARNING: Machine travel stops if foot platform lifts up during machine travel. Sudden stops from higher travel speeds could throw you from machine, or the machine could tip over. To help avoid sudden stops, keep both feet fully on the platform and stand as far to the rear as practical. Slow down when traveling over uneven ground.

https://truckmanualshub.com/

Driving onto Trailer

NOTICE: Machine is not intended to be driven on public roads.

Step 1: *Refer to "Starting Procedure," page 22-1.*

Step 2: Prepare machine to drive onto the trailer. Load and unload machine and attachments in a sequence that does not require you to back off the trailer without an attachment on the machine. Backing down a ramp without an attachment, or with a light attachment, may cause the machine to tip rearward.

Step 3: Align machine with trailer ramps, with the heavy end on the uphill side.

Step 4: Position loader arms to avoid having to move the attachment while driving on the ramps:

- Before backing onto the ramps, the attachment should be raised so the attachment will not contact the ground as the tracks start up the ramps.
- Before driving forward onto the ramps, the attachment should be raised just enough to prevent the attachment from contacting the ramps.

Step 5: Slowly move the machine up the trailer ramps. Minimize steering while on the ramps. Steering while on the ramps may result in the machine driving off the side of the ramps or cause ramps to move and drop off the trailer deck.

Step 6: Once the machine is off the ramps and onto the trailer deck, lower the attachment as low as possible.

Step 7: Stop machine when tie-down position is reached. Tie-down position distributes machine weight on the trailer as recommended by the trailer manufacturer.

Step 8: Lower lift arms and adjust tilt until attachment is firmly on trailer deck.

Step 9: Shut off engine and remove key.

https://truckmanualshub.com/

Step 10: Fasten machine to trailer using front **(1)** and rear **(2)** tie-down points on the machine. Attachments that are detached from the loader need to be properly secured for transport.

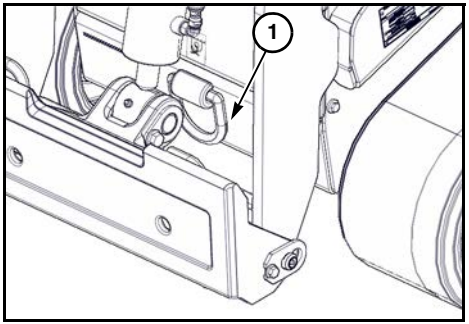

WARNING: Attachments could slip off the trailer after being disconnected from the machine, resulting in a crushing injury. When disconnecting and backing the machine away from the side of a trailer, take precautions to assure the attachments are properly secured to the trailer.

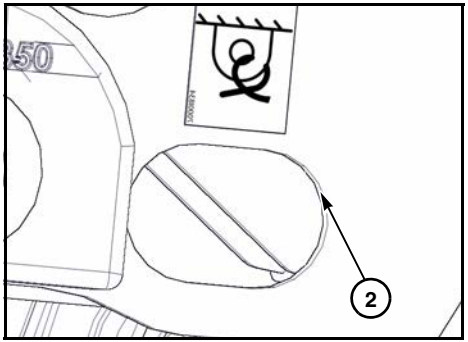

https://truckmanualshub.com/

Driving off Trailer

Step 1: Remove tie-down straps or chains.

Step 2: *Refer to "Starting Procedure," page 22-1.*

Step 3: Prepare machine to be unloaded.

Step 4: Align machine with the trailer ramps, with the heavy end on the uphill side.

Step 5: Position loader arms to avoid having to move the attachment while driving down the ramps:

- Before backing down the ramp, the attachment should be raised just enough so the attachment will not contact the ramps as the tracks leave the ramp.
- Before driving forward down the ramp, the attachment should be raised just enough to prevent the attachment from contacting the ground as the machine reaches the end of the ramps.

Step 6: Slowly move machine down the ramp to the ground. Minimize steering while on the ramps. Steering while on the ramps may result in the machine driving off the ramps or cause the ramps to move and drop off the trailer deck.

https://truckmanualshub.com/

Loading with Crane

A lift eye **(1)** is provided to hoist the machine onto the transport vehicle with a crane. Fully raise lift arms and install lift arm support bar before lifting for proper balance of the machine.

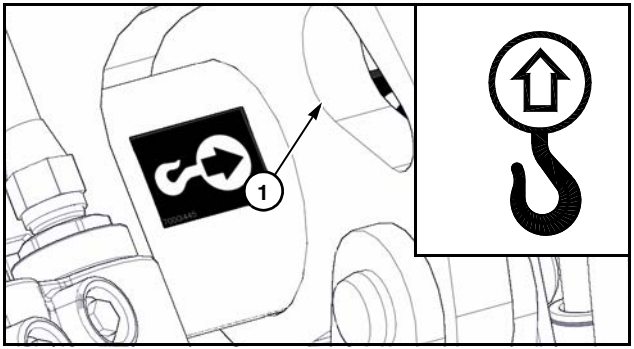

Towing the Machine

- Towing requires bypassing the ground drive pump and releasing the park brake.

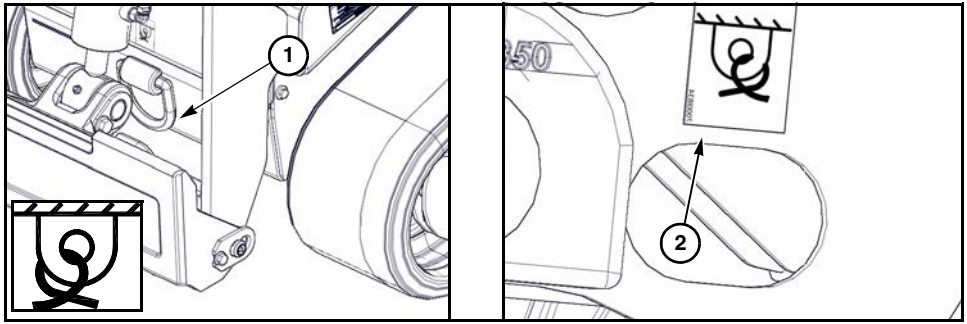

Step 1: Apply park brake. Refer to "Park Brake," *page 20-9.*

Step 2: Attach a suitable towing chain to front tie-down point **(1)** or rear tie-down points **(2)** to retrieve the machine if the machine becomes mired or disabled.

Step 3: Raise loader arms and install lift arm support bar. Refer to "Lift Arm Support Bar - Install/Remove," *page 60-2.*

Step 4: Follow *Shutdown Procedure*, page *23-1.* Leave loader arms raised. Refer to "Right Joystick - Lift/Tilt Controls," *page 20-8.*

https://truckmanualshub.com/

Step 5: Place chocks in front and back of right track.

Step 6: Access to tow valves is under front pump cover **(3)**.

NOTICE: Towing requires bypassing the ground drive pump.

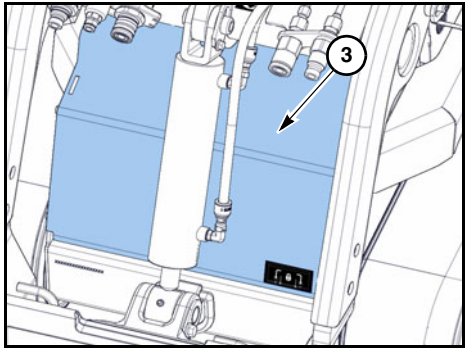

Step 7: Open engine shield and remove front pump cover **(3)**. Unscrew the bypass valves **(4)** located on side of ground drive pumps a maximum of two turns. These valves allow the motors to turn.

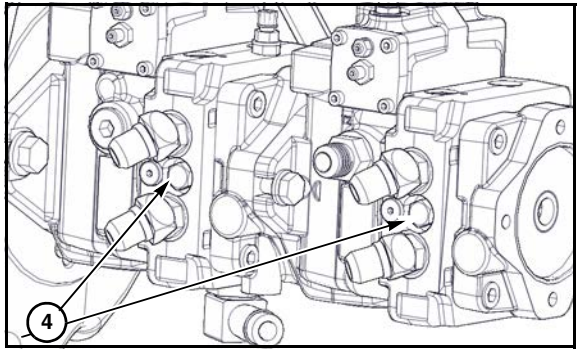

https://truckmanualshub.com/

Step 8: Release park brake. To release park brake, loosen jam nut (**5**), then loosen setscrew (**6**). Push in pin (**7**) enough to clear sprocket teeth. Tighten setscrew and jam nut to hold pin in released position. Grease fitting may have to be removed.

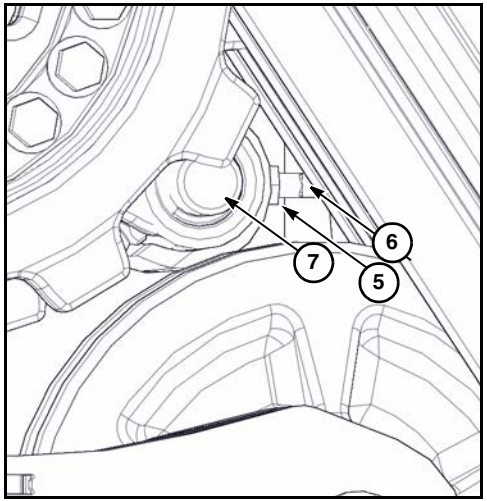

NOTICE: Machine could roll downhill after park brake is released and chocks are removed. If possible, ensure machine is on a stable and reasonably level surface prior to attempting to retrieve. Proper chocking of tracks is critical to keep machine stationary until ready to tow.

Step 9: Move towing vehicle in direction of intended travel to take up slack in towing chain. Carefully remove wheel chocks.

Step 10: Tow disabled skid steer to a firm and level surface.

NOTICE: While towing, the ground speed of the machine must not exceed 1–2 mph (2–3 km/h). Higher speeds will cause heat buildup which will damage the pumps and motors.

Do not tow more than 100 ft (30 m).

Step 11: Re-engage park brake, loosen jam nut (**5**), then loosen setscrew (**6**) to free pin.

Step 12: Tighten jam nut (**5**) to secure setscrew (**6**).

- Ensure pin operates freely after jam nut (**5**) is tightened.
- Pin must align between sprocket teeth to engage park brake. Pin has to engage sprocket teeth by at least 5/8" (16 mm).

Step 13: Tighten bypass valves prior to returning machine to service. These valves must be fully closed after towing for normal tractor operation. Torque bypass valves to 15–18 ft-lb (20–24.5 Nm).

NOTICE: Do not attempt to push-start the machine. Damage to ground drive pumps or motors will result if towing instructions are not followed correctly.

https://truckmanualshub.com/

CLEAN MACHINE

NOTICE: Machine controls and electrical/electronic devices are not rated to withstand high pressure water and temperature power washers. Water intrusion will likely cause malfunction or damage to any devices hit directly by the water spray. Keep pressure washer stream away from machine controls and electrical/electronic devices. Compressed air can also push moisture through some connector and component seals. Do not point air nozzle directly at seal areas.

https://truckmanualshub.com/

This page intentionally left blank.

https://truckmanualshub.com/

Section 40: Preparation

OPERATOR QUALIFICATIONS

WARNING: Read Operator's Manual and safety signs, and watch the operations and safety video, before operating machine.

Allow only responsible, properly instructed individuals to operate machine.

Become familiar with the controls, operation and use of the machine under the supervision of a trained and experienced operator.

The operator must be familiar with the workplace's safety rules and regulations, and must be mentally and physically capable of operating the machine safely.

Operator Presence Switch

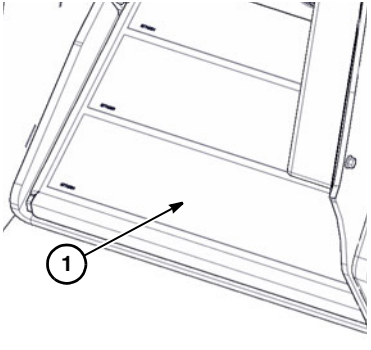

The Operator Presence system uses a switch in the operator platform to detect the presence of an operator. The operator must be standing on the operator presence foot plate (**1**) for the ground drive, lift/tilt functions, or auxiliary attachment drive to be engaged.

If the operator leaves the platform while the ground drive, lift/tilt functions, and/or attachment drive are engaged, these functions will stop. If Lift/Tilt Joystick is in FLOAT, it will continue to lower/float. The Auxiliary Attachment Drive Lever must be returned to OFF before ground drive and attachment drive can be re-engaged.

The Operator Presence system is intended for your safety and must be maintained in good functional condition. Contact your Vermeer dealer if it does not function correctly.

https://truckmanualshub.com/

PERSONAL PROTECTION

WARNING: Wear personal protective equipment. Wear close-fitting clothing and confine long hair. Avoid jewelry, such as rings, wristwatches, necklaces, or bracelets.

Operating the machine will require you to wear protective equipment. You should always wear a hard hat, safety shoes, hearing protection, and eye protection. If working near traffic, wear high visibility clothing.

Hearing protection is required when operating the machine. Hearing protection devices provide differing levels of sound reduction. It is important to select a device that is adequate and appropriate for your specific work environment. Actual sound levels may vary widely, depending on your working conditions. To determine the level of hearing protection your work environment requires, enlist the help of your local environmental noise specialist.

Eye protection must consist of wraparound safety glasses or goggles.

Others working in immediate area must also wear the above listed protective equipment.

Avoid wearing jewelry, such as rings, wristwatches, necklaces, or bracelets.

https://truckmanualshub.com/

Sound Levels

Sound pressure and sound power levels were determined according to test procedures specified in ISO 3744 and ISO 6395 and 6396.

Equivalent Continuous A-Weighted Sound Pressure at Operator's Ear as specified by ISO 6396. . . . . = * dB(A)

Guaranteed Sound Power Level as determined by directive 2000/14/EC . . . . . = * dB(A)

Stated sound levels are representative for a given operating condition. Operating conditions may vary at each site. The actual sound levels for your application and operating conditions may be different.

*Information not available at time of release.

Vibration Levels

Whole body vibration exposure has been measured according to ISO 2631. The level is below 0.5 m/s^2

Hand/arm vibration exposure has been measured according to ISO 5349. The level is below 2.5 m/s^2

Prepare the Area

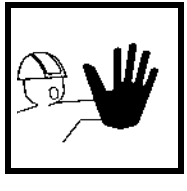

WARNING: Keep all spectators and other workers away from the machine and work area while in operation.

https://truckmanualshub.com/

Locate Buried Utilities

Call Your One-Call System First

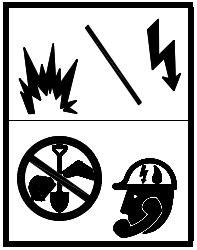

WARNING: Electricity or gas explosion can kill. Laser light in cut cable can cause eye damage.

Locate utilities before digging. Call 811 or 1-888-258-0808 in the U.S. or contact local utility companies or national regulating authority.

Before you start any digging project, call the local One-Call system in your area and any utility company that does not subscribe to the One-Call system. For areas not represented by One-Call Systems International, contact the appropriate utility companies or national regulating authority to locate and mark underground installations. If you do not call, you may have an accident or suffer injuries; cause interruption of services; damage the environment; or experience job delays.

The One-Call representative will notify participating utility companies of your proposed digging activities. Utilities will then mark their underground facilities by using the following international marking codes:

Red	Electric	Green/Brown	Sewer
Yellow	Gas, Oil or Petroleum	White	Proposed Excavation
Orange	Communication, Telephone, TV	Pink	Surveying
Blue	Potable Water		

OSHA CFR 29 1926.651 requires that the estimated location of underground utilities be determined before beginning excavation or underground drilling operation. When actual excavation or bore approaches an estimated utility location, the exact location of the underground installation must be determined by a safe, acceptable and dependable method. If utility cannot be precisely located, it must be shut off by the utility company.

https://truckmanualshub.com/

Look for Evidence of Underground Placement

Visually check for:

- notices of underground placements
- manhole covers
- drop boxes
- recent trenching activity

Striking a Utility

Electricity

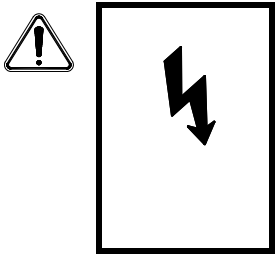

DANGER: Electric shock can kill.

If strike occurs, stay on machine. Contacting the machine and ground while stepping off may result in death or injury. Raise auger or trencher to try breaking contact with electric power line. Have someone who is clear of the area contact the utility company to shut off electrical power. Do not continue work until utility company has declared the area safe to resume operation. Do not allow anyone to approach the machine.

Some circuit breakers automatically reset. Do not assume power has been permanently disconnected until you confirm that the utility company has locked out power to that line.

https://truckmanualshub.com/

Gas

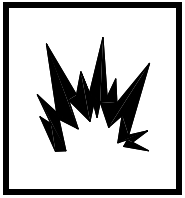

DANGER: Gas explosion can kill. If you strike a gas line, shut off engine and evacuate area immediately. Contact utility company and do not return until the utility company gives permission to do so.

Fiber Optic

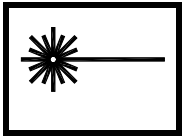

WARNING: Laser light may damage eyes. Do not look into the end. Fiber optic cables carry laser light which may damage your eyes. If you are not sure what type of cable it is, do not look into the end. Contact appropriate utility company for assistance.

Jobsite Assessment

Examine work area for any obstructions, conditions, or situations which may impair machine operation or create a safety hazard for the operator or other persons. Use the information in this manual combined with your own good judgment when identifying these hazards and implementing hazard avoidance measures.

Check for steep slopes, banks, overhangs, drop-offs, and trenches which can cave in.

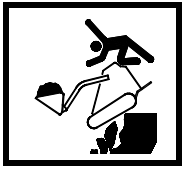

WARNING: The weight of your machine may cause the ground to give way. Machine can fall and tip over. Death or serious injury could result. Keep well away from cliff edges. Do not dig under the machine or attachment. Take care when backfilling. Do not go too close to edges. Do not drive or operate on unstable ground.

https://truckmanualshub.com/

WARNING: Cliff and high banks can fall on you. Take care when working below overhangs. Do not dig away beneath them. Look out for rock falls and soil slips.

When work is planned inside or around structures such as buildings, bridges, and low-hanging tree limbs, check for adequate overhead and side clearances. Be sure to account for the height of the boom.

The operator or job foreman should also inspect the jobsite for:

- holes, rocks, or other hidden hazards
- traffic/site access

Remove any obstacles or materials that could result in injury or damage the machine.

WARNING: Engine exhaust can asphyxiate or poison resulting in death or serious injury. Operate machine outdoors. If it is necessary to operate engine in an enclosed area, properly vent exhaust gases.

Good ventilation is very important. Sparks from the electrical system and engine exhaust can cause an explosion or fire in a flammable or explosive atmosphere. Do not operate this machine in an area with flammable dust or vapors.

Carbon monoxide fumes from the engine can asphyxiate. Operate only outdoors or provide adequate ventilation if indoor operation is essential.

https://truckmanualshub.com/

PREPARE THE MACHINE

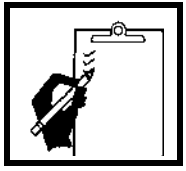

WARNING: Check machine before operating. Machine must be in good operating condition and all safety equipment installed and functioning properly.

- Ensure you understand and comply with all jobsite rules that might apply to your work situation.
- If operating along a road, properly warn and divert motor and pedestrian traffic. Use all necessary signs, cones, flag persons, or lighting devices needed for the work situation.

ATTACHMENTS

WARNING: Using attachments authorized by Vermeer Corporation is important for your safety. Using unauthorized attachments may cause difficulties with steering, stopping, stability and other undesirable performance or handling characteristics, or they may not attach securely to your machine. Never use unauthorized attachments.

https://truckmanualshub.com/

Install/Remove

Before connecting any attachment to the machine, ensure all machine and attachment mounting plates are free of dirt and debris in order to ensure the attachment can be properly connected.

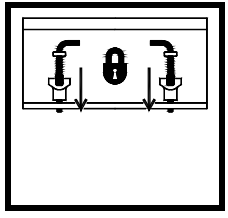

WARNING: Attachment can fall off loader attachment mounting plate if incorrectly attached. Death or serious injury could result.

When installing attachment, be certain that pins snap into place, pin tops are rotated 90° inward, and pin ends are visible beneath attachment mount.

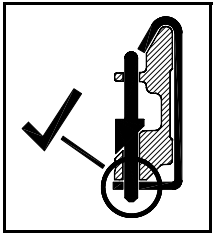

Attachment - Install

Step 1: Position attachment on a level surface with sufficient area behind it to accommodate the machine.

Step 2: Ensure pins are rotated until tops of pins face outward as shown **(1)**.

Step 3: Start machine, and lower lift arm. Tilt loader mounting plate forward slightly.

Step 4: Drive machine FORWARD, aligning loader mounting plate with attachment.

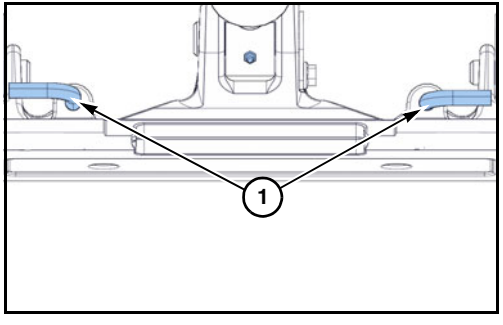

https://truckmanualshub.com/

Step 5: Once top edge of mounting plate enters under lip of attachment mount as shown **(2)**, raise lift arm while tilting mounting plate back to securely engage attachment.

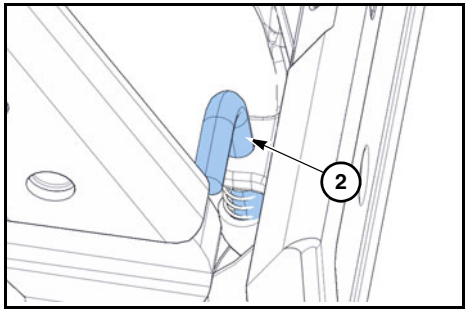

Step 6: Raise attachment sufficiently to clear the ground. Tilt attachment plate back fully.

Step 7: Ensure *Ground Drive* and *Attachment Lift and Tilt Controls* are in NEUTRAL, and shut off machine and remove key.

Step 8: Rotate pins 180° until pins engage and extend through bottom of attachment mount and are visible beneath attachment mount. Tops of pins must face inward as shown **(3)**.

Step 9: Attach hydraulics if required. Refer to “Hydraulics - Attach/Detach,” *page 40-12*

NOTICE: Ensure pin ends extend through bottom of attachment mount and are visible.

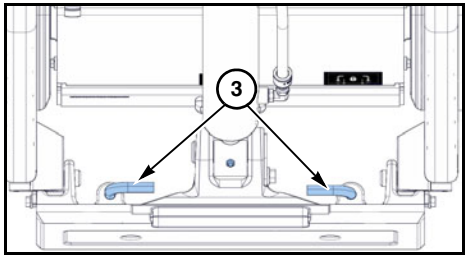

https://truckmanualshub.com/

Attachment - Remove

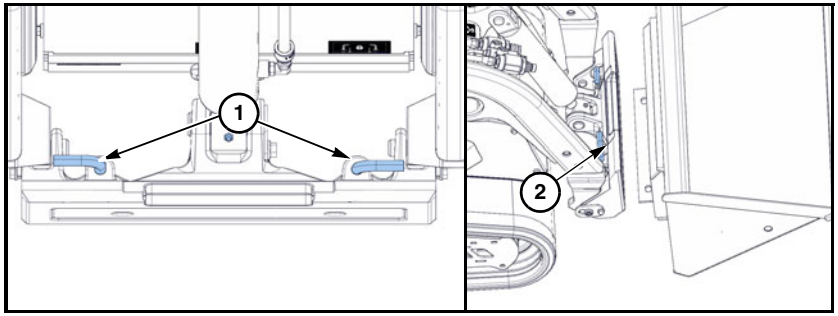

Step 1: Attach hydraulic power if required. Refer to “Hydraulics - Attach,” *page 40-13*

Step 2: Lower lift arms until attachment rests on the ground. Ensure *Ground Drive* and *Attachment Lift and Tilt Controls* are in NEUTRAL, and shut off engine and remove key.

Step 3: To unlatch attachment, rotate pins **(1)** 180° until top of pin faces outward as shown.

Step 4: Tilt loader mounting plate **(2)** forward slightly. Lower lift arms if necessary.

Step 5: Drive machine in REVERSE to detach loader from attachment.

If detaching an attachment onto a trailer with the machine positioned on the ground, locate the attachment to prevent it from falling off.

WARNING: Attachments could slip off the trailer after being disconnected from the machine, resulting in a crushing injury. When disconnecting and backing the machine away from the side of a trailer, take precautions to assure the attachments are properly secured to the trailer.

https://truckmanualshub.com/

HYDRAULICS - ATTACH/DETACH

WARNING: Pressurized fluid can penetrate body tissue and result in death or serious injury. Leaks can be invisible. Keep away from any suspected leaks. Relieve pressure in the hydraulic system before searching for leaks, disconnecting hoses, or performing any other work on the system. If you must pressurize the system to find a suspected leak, use an object such as a piece of wood or cardboard rather than your hands. When loosening a fitting where some residual pressure may exist, slowly loosen the fitting until oil begins to leak. Wait for leaking to stop before disconnecting the fitting. Fluid injected under the skin must be removed immediately by a surgeon familiar with this type of injury.

WARNING: Contact with hot hydraulic couplers, hoses and fluid may result in burns. Wear gloves when connecting and disconnecting hydraulic hoses, and wait until unit has cooled before touching hydraulic components.

NOTICE: Ensure all foreign matter is cleaned from hydraulic connectors before making connections.

https://truckmanualshub.com/

Hydraulics - Attach

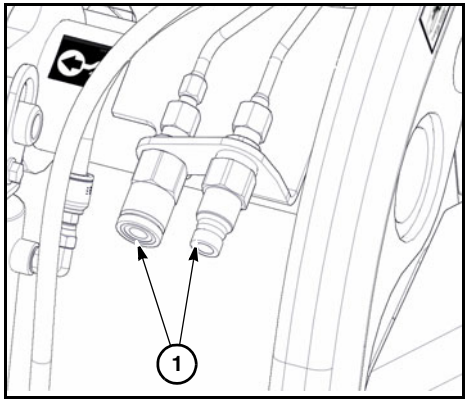

If attachment requires hydraulic power, after securing attachment to the machine:

Step 1: Shut off engine and turn key to run position. Move *Auxiliary Attachment Drive Lever* forward, backward, and back to NEUTRAL position to relieve hydraulic pressure. Turn key to STOP and remove key.

Step 2: Connect hoses to auxiliary hydraulic couplers **(1)**. Confirm that connection is secure by pulling on couplers.

NOTICE: Attachments with cylinders or motors may have residual pressure remaining in hydraulic lines from cylinder or motor loading. Ensure cylinders or motors are not loaded to help relieve residual pressure in attachment hydraulic lines before attaching lines to couplers.

Hydraulics - Detach

Step 1: Lower lift arms until attachment rests on the ground. Ensure *Ground Drive* and *Auxiliary Attachment Levers* are in NEUTRAL. Shut off engine.

Step 2: With key in run position (engine not running) move *Auxiliary Attachment Drive Lever* forward, backward, and back to NEUTRAL position to relieve hydraulic pressure. Turn key to STOP and remove key.

Step 3: Unhook hoses from auxiliary hydraulic couplers. Remove attachment from machine.

https://truckmanualshub.com/

Auxiliary Low Flow/Tank Port

Machine is equipped with low flow auxiliary connections **(1)** and an extra tank port **(2)**. This auxiliary connection was designed to be used with attachments requiring lower flow, closed center (holding) operation, much like a cylinder.

The auxiliary hydraulic couplers are attached and detached in the same manner as standard connections.

Some attachments that use the standard, higher flow connections may have a case drain line that can be attached to the tank port **(2)**.

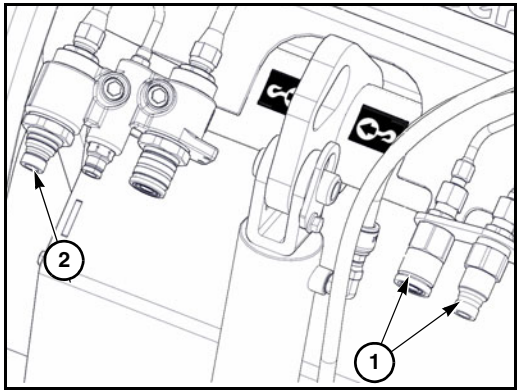

https://truckmanualshub.com/

Section 50: Operating the Machine

Load Capacities

The S925TX has a rated operating capacity of 925 lb (420 kg) when tested in accordance with SAE J2752 and ISO 14397-1 standards.

NOTICE: Ensure combined weight of attachment and materials being handled does not exceed the machine's operating capacity. Very dense materials weigh more than less dense materials; reduce load size when lifting dense materials. Refer to manuals supplied with attachments for attachment weights.

Driving Safety

Before Driving

Until the operator is familiar with the controls and understands the capability of the machine, use a slower ground speed to move the machine. Use reduced speeds when operating in rough terrain or in small areas.

A handgrip bar is provided to allow the operator to keep both hands on the bar for stability when using machine. Always keep both hands firmly on the handgrip before starting to move the machine. Keep both hands on the grip whenever moving or operating ground drive controls. Return controls to NEUTRAL before removing your hands from the handgrip bar. Before driving or operating the mini skid steer, survey the area around the machine for persons or obstacles.

Place hands, palms down, on the handgrip bar so fingers are on the forward area of the bar and the palms on the rear portion of the bar, with the joystick knob cradled between thumb and forefinger. This provides a secure grip and good lever control.

This machine is not intended to be driven on public roads.

https://truckmanualshub.com/

While Driving

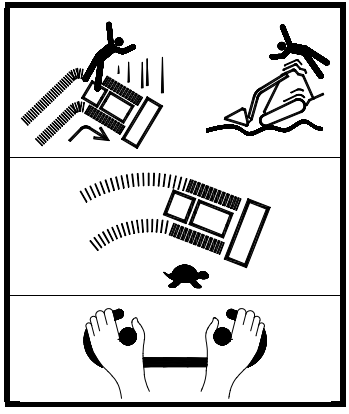

WARNING: Abrupt movement and uneven terrain can throw operator off machine.

Avoid abrupt starts, stops, and turns.

Keep both hands firmly on grips.

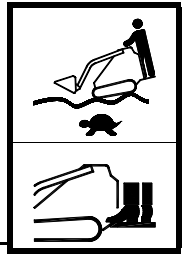

Slow down on rough and uneven terrain.

Keep both feet on platform.

Move *Ground Drive Joystick* slowly to start moving the machine smoothly. Avoid sudden stopping, starting, or turning unless necessary.

WARNING: Rider may fall out and be injured or killed.

Do not carry riders.

https://truckmanualshub.com/

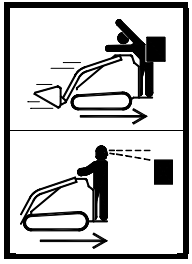

WARNING: Objects behind can crush you.

Look behind when moving rearward.

NOTICE: Slow down and use extra caution when traveling around obstructions that may limit visibility.

Drive machine at a speed suitable for the terrain.

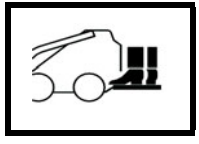

WARNING: Operator's leg can be crushed if machine is moved rearward while standing on the ground. Operator Presence foot plate must function properly. Never move machine with one or both feet on the ground. Keep both feet on the foot plate.

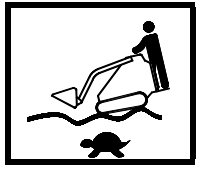

WARNING: Machine travel stops suddenly if foot platform lifts up during machine travel. Sudden stops from higher travel speeds could throw you from machine, or the machine could tip over. To help avoid sudden stops, keep both feet fully on the platform and stand as far to the rear as practical. Slow down when traveling over uneven ground.

https://truckmanualshub.com/

Operate machine up and down an incline, not across the incline. Use extra care when working on inclines.

When driving over an object such as a curb, the machine can pitch forward or backward quickly. Watch for these objects and travel very slowly. If you will encounter the same object repeatedly, build a ramp with dirt to make traveling smoother.

Safe Operating on Slopes

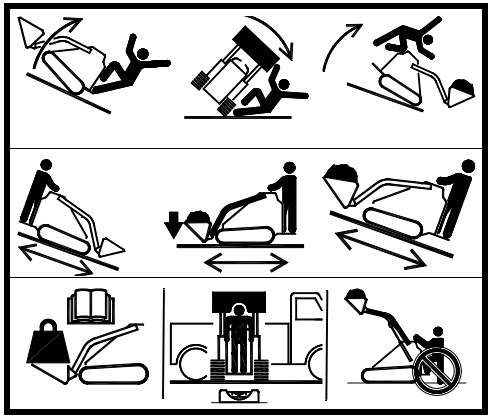

WARNING: Traveling on slopes or with load elevated may result in tipover. Death or serious crushing injury can result.

Always travel with load lowered when traveling up or down slopes. You may also need to keep heavy end uphill for added stability.

Do not exceed rated load capacity.
Load on firm and level ground.
Do not step off platform with load raised.

https://truckmanualshub.com/

Safe operating on slopes depends on several factors including:

- Machine weight distribution including front loading or absence of load
- Height of load
- Even or rough ground conditions
- Potential for ground giving way, causing either unplanned forward, reverse or sideways tilt
- Nearness of ditches, ruts, stumps or other obstructions and sudden changes in slope
- Speed
- Turning
- Braking performance
- Operator skill

These varying factors make it impractical to specify a maximum safe operating angle in this manual. It is therefore important for the operator to be aware of these conditions and adjust operation accordingly. Maximum engine angle and braking performance are two absolute limits which must never be exceeded. These maximums are stated below since they are **design** limits. These angles are not **operating** limits and therefore must never be used alone to establish safe operating angles for varying conditions.

- Maximum engine lubrication angle is 30°.
- Service brake retarding force - equal to traction of both tracks
- Secondary brake - equal to traction of one track
- Park brake holding force - equal to traction of one track.

https://truckmanualshub.com/

Operating the Mini Skid Steer

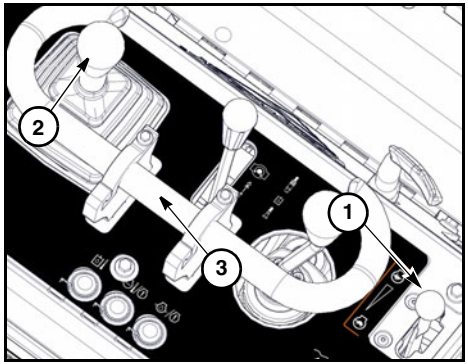

Move Ground Drive Joystick slowly to start moving the machine smoothly. Avoid sudden stopping, starting, or turning unless necessary. Operate machine up and down an incline, not across the incline. Use extra care when working on inclines.

When driving over an object such as a curb, the machine can pitch forward or backward quickly. Watch for these objects and travel very slowly. If you will encounter the same object repeatedly, build a ramp with dirt to make traveling smoother.

Step 1: *Refer to "Starting Procedure," page 22-1.*

Step 2: Move *Throttle* **(1)** forward and hold until desired engine speed is reached for the work being done.

Step 3: Ensure attachment is in transport position (as low as practical and tilted back).

If operator weight is removed from platform, machine hydraulic functions will stop. If attachment *Lift / Tilt Joystick* is in FLOAT, it will continue to lower/float.

Step 4: Use *Ground Drive Joystick* **(2)** to move and steer the machine. Do not jerk control lever. Hold firmly onto handgrip **(3)** with both hands while operating.

Step 5: When parking the machine, always follow Shutdown Procedure. Follow *Shutdown Procedure,* page *23-1.* Never leave machine with engine running or attachment raised.

The Operator Presence system in the operator platform detects the presence of an operator. The operator must be standing on the platform for the ground drive, lift/tilt functions, or auxiliary attachment drive to be engaged. Keep both feet on the platform.

https://truckmanualshub.com/

BUCKET OPERATION

Bucket - Install/Remove

Follow proper procedures for attaching and removing attachments. Refer to “Attachments,” *page 40-8.*

Safety Precautions

WARNING: Never work under an attachment unless it is adequately supported to prevent it from falling unexpectedly.

WARNING: Falling load can crush.

Keep load level when raising lift arms.

https://truckmanualshub.com/

Moving Machine with Load

- When moving the machine with a full bucket, go up or down slope with load (heavy end of machine) facing top of slope. When moving the machine with an empty bucket, go up or down slope with bucket (light end of machine) facing bottom of slope.
- Keep bucket level and as low as practical (carry position), raised only enough to clear any ground obstructions.
- Watch terrain and avoid slopes, bumps, or depressions which could make machine unstable. Wherever practical, drive directly up or down a slope or curb.
- Do not overload machine. Refer to “Load Capacities,” *page 50-1.*
- Avoid double stacked loads. Secure any load that could shift during movement.
- Additional safety information is provided in this section. Refer to “Driving Safety,” *page 50-1.*
- Do not step off operator’s platform when loader arms or attachment are raised. Machine stability is reduced and may cause machine to tip forward when you step off.

Filling the Bucket

Step 1: Fully lower lift arms.

Step 2: Tilt bucket forward until cutting edge of bucket contacts the ground, and bottom of bucket is level with the ground.

Step 3: Move machine forward slowly into the material while gradually tilting bucket backward as it fills.

Step 4: Move machine backward away from the material.

https://truckmanualshub.com/

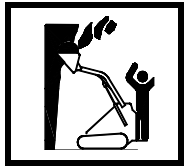

WARNING: Cliff and high banks can fall on you. Take care when working below overhangs. Do not dig away beneath them. Look out for rock falls and soil slips.

Digging with the Bucket

Step 1: Fully lower lift arms.

Step 2: Tilt bucket forward until cutting edge of bucket contacts the ground.

Step 3: Move machine forward slowly, continuing to tilt bucket down until it enters the ground to desired depth.

Step 4: Tilt bucket backward slightly to increase traction and maintain an even digging depth.

Step 5: Continue driving machine forward until bucket is full.

If ground is hard, tilt bucket forward and backward while driving slowly forward.

Step 6: When bucket is full, tilt bucket fully backward.

https://truckmanualshub.com/

Emptying the Bucket

Step 1: With bucket in carry position, move machine to dump site.

Step 2: Raise lift arms just enough to clear side of truck box or bin, while tilting bucket to keep load from spilling. Always load on firm and level ground.

Step 3: Move machine forward slowly until the bucket is over the truck box or bin. If possible, avoid steering while load is raised. Steering results in side motion of the load, which could make the machine unstable. If steering is necessary, move very slowly using smooth steering motion.

Step 4: Tilt bucket forward until it empties. If necessary, use bucket to redistribute materials in the truck box or bin.

Step 5: After dumping load, back away just far enough from truck or container to lower the bucket. Lower bucket before steering. Moving the machine with the bucket raised reduces stability.

Backdragging with the Bucket

Step 1: Push *Lift/Tilt Joystick* fully forward into FLOAT position.

Step 2: Tilt bucket down. The farther the bucket is tilted down, the more cutting edge force is applied to move loose material.

Step 3: Move machine in reverse to level loose material.

Step 4: Before moving forward, raise loader arms or tilt bucket back to lift the bucket cutting edge off the ground.

https://truckmanualshub.com/

Backfilling with the Bucket

Step 1: Fully lower lift arms.

Step 2: Use *Lift/Tilt Controls* to tilt bucket forward until cutting edge of bucket contacts the ground.

Step 3: Move machine forward to the edge of the hole or trench to push material into it.

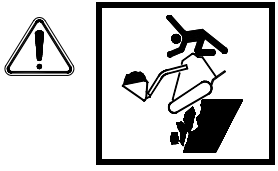

WARNING: The weight of your machine may cause the ground to give way. Machine can fall and tip over. Death or serious injury could result. Keep well away from cliff edges. Take care when backfilling. Do not go too close to edges. Do not drive or operate on unstable ground.

Step 4: Tilt bucket forward as soon as cutting edge is over the rim of the hole or trench to dump material out of the bucket.

Step 5: If necessary, raise lift arms and tilt bucket forward to empty the bucket.

Operating with Other Vermeer-Authorized Attachments

Refer to the attachment manual supplied by the attachment manufacturer for operating and maintenance instructions for the attachment and additional instructions that may be required for the S925TX.

https://truckmanualshub.com/

This page intentionally left blank.

https://truckmanualshub.com/

Section 60: Maintenance Intervals

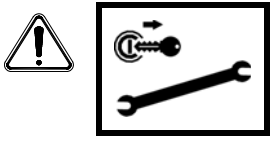

WARNING: Use Shutdown Procedure before servicing, cleaning, repairing or transporting machine. Follow *Shutdown Procedure*, page *23-1.*

Visually inspect machine daily before starting the machine.

Make no modifications to your equipment unless specifically recommended by Vermeer Corporation.

Safety Sign Maintenance - 100 Hours/Monthly

Safety signs located on your machine contain important and useful information that will help you operate your equipment safely. Refer to the *Parts Manual* for identification and location of safety signs.

To assure that all safety signs remain in place and in good condition, follow instructions given below:

- Keep safety signs clean. Use soap and water—not mineral spirits, abrasive cleaners, or other similar cleaners that will damage the sign.
- Replace any damaged or missing safety signs. When attaching safety signs, the temperature of the mounting surface must be at least 40°F (5°C). The mounting surface must also be clean and dry.
- When replacing a machine component with a safety sign attached, replace safety sign also.
- Replacement safety signs can be purchased from your Vermeer equipment dealer.

https://truckmanualshub.com/

LIFT ARM SUPPORT BAR - INSTALL/REMOVE

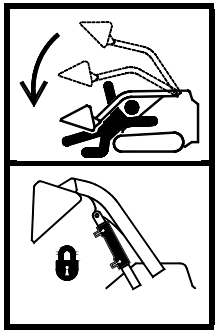

WARNING: Falling loader arms can crush.

Completely lower the loader arms or install lift arm support bar before disconnecting and removing hydraulic components or working under raised arms.

Always empty attachment and install loader arm support bar before working beneath raised loader arms.

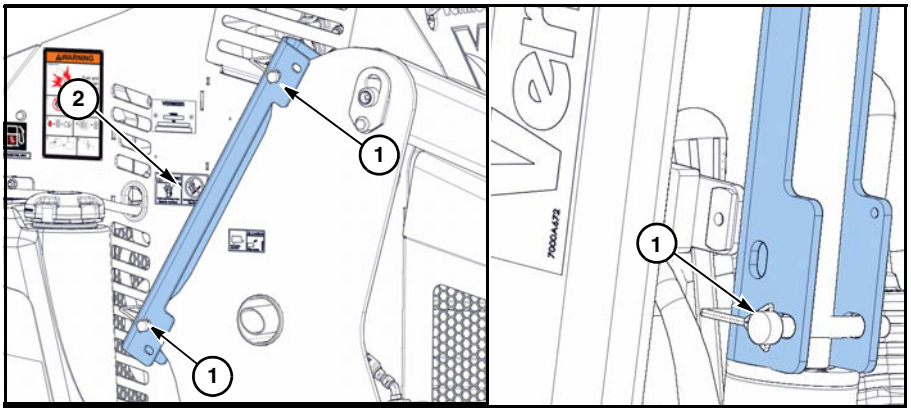

Step 1: Remove pins **(1)** and support bar **(2)** from stow location shown in left photo.

Step 2: Raise lift arms to support bar height.

Step 3: Install support bar over lift arm cylinder as shown in right photo. Secure with pins **(1)**.

Step 4: Follow *Shutdown Procedure*, page *23-1.*

Step 5: When work is finished, return support bar to stow location. Install pin to retain support bar in stow location.

https://truckmanualshub.com/

Maintenance Manual

Maintenance intervals are included for reference only. Before performing any maintenance, refer to the Maintenance Manual for safety guidelines and correct procedures.

Refer to the Engine Operation Manual for additional information and service requirements. Shorten maintenance intervals when operating under dusty, dirty conditions.

Greasing the Machine

As a general rule, grease machine after it is shut down for the day. This protects the metal under the seals from corrosion caused by condensation as the temperature drops.

Ensure all fittings and grease applicator nozzle are clean before applying the grease. If any grease fittings are missing, replace them immediately.

Hourmeter - Check for Maintenance Interval

The hourmeter is used to determine maintenance intervals for the machine. The hourmeter indicates the total number of hours the engine has been in operation.

Maintenance intervals are based on normal operating conditions. When operating under severe conditions, the maintenance intervals should be shortened.

https://truckmanualshub.com/

MAINTENANCE INTERVAL SCHEDULE

Initial = Initial maintenance on new machine. Regular maintenance interval may be different.

● = Regular maintenance interval.

For Vermeer maintenance replacement part numbers, refer to the *Parts Manual* or call your Vermeer dealer.

Each maintenance interval is also the title of chapter following this schedule. Refer to the appropriate chapter for instructions. Refer to the Engine Operation Manuals supplied with each machine for complete instructions.

	10 Hrs Daily	50 Hrs Weekly	100 Hrs Monthly	200 Hours	250 Hours	500 Hours	1000 Hours	2000 Hours	As Needed
Engine - Daily Checks	●								
Engine Coolant Level - Check	●								
Engine Oil - Check	●								
Fuel Tanks - Fill	●								
Hydraulic Fluid - Check	●								
Air Cleaner - Check/Service	●								
Machine- Grease	●								
Fuel Lines and Clamp Bands - Check		●							
Engine Oil and Filter - Change/Replace		Initial							
Hydraulic Filter - Replacement		Initial							
Track Tension - Check		●							
Fan Belt Tightness - Check			●						
Fuel Filter - Clean			●						
Machine - Overall Check			●						
Safety Signs Maintenance			●						
Neutral Start Interlocks - Check			●						
Park Brake - Check			●						

https://truckmanualshub.com/

	10 Hrs Daily	50 Hrs Weekly	100 Hrs Monthly	200 Hours	250 Hours	500 Hours	1000 Hours	2000 Hours	As Needed
Control Joystick and Switches - Check			●						
Controls - Check Neutral Positions			●						
Operator Presence System - Check			●						
Hydraulic System - Check			●						
Hydraulic Oil Cooling Fan - Check/Service				●					
Radiator Hoses and Clamps - Check				●					
Engine Oil/Filter - Change/Replace				●					
Hydraulic Filter - Replace					●				
Fuel Tanks Sediment - Remove						●			
Fan Belt - Replace						●			
Clean Engine Cooling System						●			
Battery Electrolyte Levels and Terminals - Check/Clean						●			
Fuel Filter - Replace						●			
Hydraulic Fluid - Change							●		
Hydraulic Strainer - Service							●		
Engine Cooling System - Drain and Clean								●	
Primary/Secondary Air Cleaner Element - Replace									●
Battery - Replace									●
Track Tension - Adjust									●
Handgrip Bar - Adjust									●
Storage Procedure									●
Lift Arm Cylinders - Adjust									●

https://truckmanualshub.com/

	10 Hrs Daily	50 Hrs Weekly	100 Hrs Monthly	200 Hours	250 Hours	500 Hours	1000 Hours	2000 Hours	As Needed
Engine System - Check									●

ATTACHMENT MAINTENANCE

Refer to the attachment manuals provided by the attachment manufacturer. The attachment manuals must be attached to the machine together with the S925TX *Operator's Manual.*

https://truckmanualshub.com/

Section 62: Engine Fault Codes

Engine Fault Codes (Gasoline Engine Only)

Refer to the Engine Operations Manual for additional information on understanding and recording engine fault codes displayed on tachometer LED, and appropriate remedial actions. Always contact your Vermeer dealer or engine service dealer for help in correcting diagnostic trouble codes which are displayed for your engine.

The first part of the code is a six-digit **S**uspect **P**arameter **N**umber (SPN) which identifies the system or component that failed, followed by a two-digit **F**ailure **M**ode **I**dentifier (FMI) code which identifies the type of failure (example: high temperature). In order to determine the exact failure both parts of the code are needed.

SPN	FMI	DESCRIPTION	CORRECTIVE ACTION
106	16	MAP high pressure	Check fuel pump and pressure sensor wiring
106	4	MAP Low Voltage	Check wiring/Contact servicing dealer
94	3	FP High Voltage	Contact servicing dealer
94	4	FP low Voltage	Contact servicing dealer
94	0	Fuel Pressure High	Contact servicing dealer
94	1	Fuel Pressure Low	Check fuel line routing and fuel filter/Fuel pump
168	15	Battery Voltage High	Contact servicing dealer
168	17	Battery Voltage Low	Contact servicing dealer
1079	4	Sensor Supply Voltage 1 Low	Check wiring/Check battery condition
1080	3	Sensor Supply Voltage 1 High	Check wiring/Contact servicing dealer
51	3	TPS1 Signal Voltage High	Check wiring/Contact servicing dealer
51	3	TPS1 Signal Voltage Low	Check wiring/Contact servicing dealer

https://truckmanualshub.com/

SPN	FMI	DESCRIPTION	CORRECTIVE ACTION
3673	4	TPS2 Signal Voltage Low	Check wiring/Contact servicing dealer
91	3	FPP1 Voltage High	Check wiring/Contact servicing dealer
91	4	FPP1 Voltage Low	Check wiring/Contact servicing dealer
100	1	Oil Pressure Low	Check engine oil level, Contact servicing dealer
4237	0	Adaptive Learn Bank1 high (gasoline)	Contact servicing dealer
4237	1	Adaptive Learn Bank1 Low (gasoline)	Contact servicing dealer
4236	0	Closed Loop Bank 1 High (gasoline)	Contact servicing dealer
4236	1	Closed Loop Bank 1 Low (gasoline)	Contact servicing dealer
3050	11	Catalyst Inactive on Gasoline (Bank 1	Contact servicing dealer
3217	5	EGO1 Open/Lazy	Check wiring/Contact servicing dealer
3227	5	EGO2 Open/Lazy	Check wiring/Contact servicing dealer
632	31	Fuel Run Out Longer Then Expected	Contact servicing dealer
1348	4	Fuel Pump Relay Ground Short	Check fuel pump and pressure sensor wiring
723	4	Loss of Camshaft Input Signal	Contact servicing dealer
723	2	Camshaft Input Signal Noise	Contact servicing dealer
636	8	Crank and /or Cam Could Not Synchronize During Start	Contact servicing dealer
629	30	Microprocessor Failure - Cop	Check wiring/Contact servicing dealer

Refer to Engine Manual and contact your Vermeer servicing dealer for additional codes and information.

https://truckmanualshub.com/

Index

A
Attachment - Install, 40-9
Attachment - Remove, 40-11
Attachment Maintenance, 60-6
Attachments, 40-8
Auxiliary Low Flow/Tank Port, 40-14

B
Backdragging with the Bucket, 50-10
Backfilling with the Bucket, 50-11
Battery Burns - Avoid, 22-3
Battery Explosion - Avoid, 22-3
Before Driving, 50-1
Boom Lift/Attachment Tilt Lockout Override, 20-9
Bucket - Install/Remove, 50-7
Bucket Operation, 50-7

C
Call Your One-Call System First, 40-4
Clean Machine, 30-9
Cold Weather Starting, 22-2
Control Station, 20-5
Controls, 20-1
Crystalline Silica, 10-5

D
Dealer Prep, i
Dealer/Owner Information, iii
Delivery, ii
Diesel , 20-10
Diesel Fuel Engines - Sulfur Content, 12-1
Digging with the Bucket, 50-9
Driving off Trailer, 30-5
Driving onto Trailer, 30-3
Driving Safety, 50-1

E
Electricity, 40-5
Emissions Quick Reference Guide, 18-1
Emptying the Bucket, 50-10
Engine Controls, 20-1
Engine Fault Codes (Gasoline Engine Only), 62-1
Engine Fault Codes, 62-1
Engine, 22-2

F
Fiber Optic, 40-6
Filling the Bucket, 50-8
Fuel Tank Fill, 12-1
Fuses and Relays, 20-10

G
Gas Engine, 12-3
Gas, 20-11
Gas, 40-6
Greasing the Machine, 60-3

https://truckmanualshub.com/

H
Hourmeter - Check for Maintenance Interval, 60-3
Hydraulic Fluid, 22-2
Hydraulics - Attach, 40-13
Hydraulics - Attach/Detach, 40-12
Hydraulics - Detach, 40-13

I
Identification Numbers - Record, iv
Indicator Lights, 20-3
Install/Remove, 40-9
Intended Use, 15-1

J
Jobsite Assessment, 40-6
Jump-Starting Procedure, 22-5
Jump-Starting, 22-3

K
L
Lift Arm Support Bar - Install/Remove, 60-2
Load Capacities, 50-1
Loading with Crane, 30-6
Loading/Unloading the Machine, 30-1
Loading/Unloading, 30-2
Locate Buried Utilities, 40-4
Look for Evidence of Underground Placement, 40-5

M
Machine Identification Decal, v
Maintenance Interval Schedule, 60-4
Maintenance Intervals, 60-1
Maintenance Manual, 60-3
Moving Machine with Load, 50-8

N
O
Operating the Machine, 50-1
Operating the Mini Skid Steer, 50-6
Operating with Other Vermeer-Authorized Attachments, 50-11
Operator Presence Switch, 40-1
Operator Presence System, 20-9
Operator Qualifications, 40-1

P
Park Brake, 20-9
Personal Protection, 40-2
Preparation, 40-1
Prepare the Area, 40-3
Prepare the Machine, 40-8

Q
R
Receiving and Delivery Report, i

S
Safe Operating on Slopes, 50-4
Safety Messages, 10-1
Safety Precautions, 50-7
Safety Sign Maintenance - 100 Hours/Monthly, 60-1
Safety Symbol Explanation, 10-1
Shutdown Procedure, 23-1

https://truckmanualshub.com/

Sound Levels , 40-3
Starting Procedure, 22-1
Starting the Engine, 22-1
Striking a Utility, 40-5

T
Towing the Machine, 30-6
Transporting the Machine, 30-1

U
V
Vibration Levels, 40-3

W
Welding Alert - Electronic Components, 11-1
Welding Precautions, 11-1
While Driving, 50-2

X
Y
Z

https://truckmanualshub.com/

This page intentionally left blank.

https://truckmanualshub.com/

Revision History

Revision	Date	Pages	Description
o1_00	06/17	All	First Edition Original Manual Released.

https://truckmanualshub.com/

WARNING

The engine exhaust from this product contains chemicals known to the State of California to cause cancer, birth defects, or other reproductive harm.

CALIFORNIA
Proposition 65 Warning

Engine exhaust and some of its constituents are known to the State of California to cause cancer, birth defects, and other reproductive harm.

WARNING

This product contains chemicals known to the state of California to cause birth defects or other reproductive harm.

CALIFORNIA
Proposition 65 Warning

This product contains chemicals known to the state of California to cause birth defects or other reproductive harm.

When operated in California, any off-road diesel vehicle may be subject to the California Air Resources Board In-Use Off-Road Diesel Vehicle Regulation. It therefore could be subject to retrofit or accelerated turnover requirements to reduce emissions of air pollutants. For more information, please visit the California Air Resources Board website at http://www.arb.ca.gov/msprog/ordiesel/ordiesel.htm.

Copyright 2017 All rights reserved.
Vermeer Corporation
1210 Vermeer Road East, P.O. Box 200
Pella, Iowa 50219-0200