COOLING

TABLE OF CONTENTS

page

COOLING
DESCRIPTION
GAS ENGINE 2
5.9L DIESEL 5
HOSE CLAMPS 6
OPERATION
COOLING SYSTEM 6
HOSE CLAMPS 6
DIAGNOSIS AND TESTING
ON-BOARD DIAGNOSTICS (OBD) 7
COOLING SYSTEM - TESTING FOR LEAKS 7
COOLING SYSTEM DIESEL ENGINE 9
PRELIMINARY CHECKS 12
STANDARD PROCEDURE
COOLANT LEVEL CHECK 19
COOLING SYSTEM CLEANING/REVERSE FLUSHING 19
DRAINING COOLING SYSTEM - ALL GAS ENGINES 20
REFILLING COOLING SYSTEM - ALL GAS ENGINES 20
DRAINING COOLING SYSTEM - 5.9L DIESEL ENGINE 20
REFILLING COOLING SYSTEM - 5.9L DIESEL ENGINE 21
ADDING ADDITIONAL COOLANT 21
SPECIFICATIONS
TORQUE 22
SPECIFICATIONS - FILL VOLUMES 23
SPECIAL TOOLS
COOLING 24
ACCESSORY DRIVE 25
ENGINE 39
TRANSMISSION 99

COOLING

DESCRIPTION

GAS ENGINE

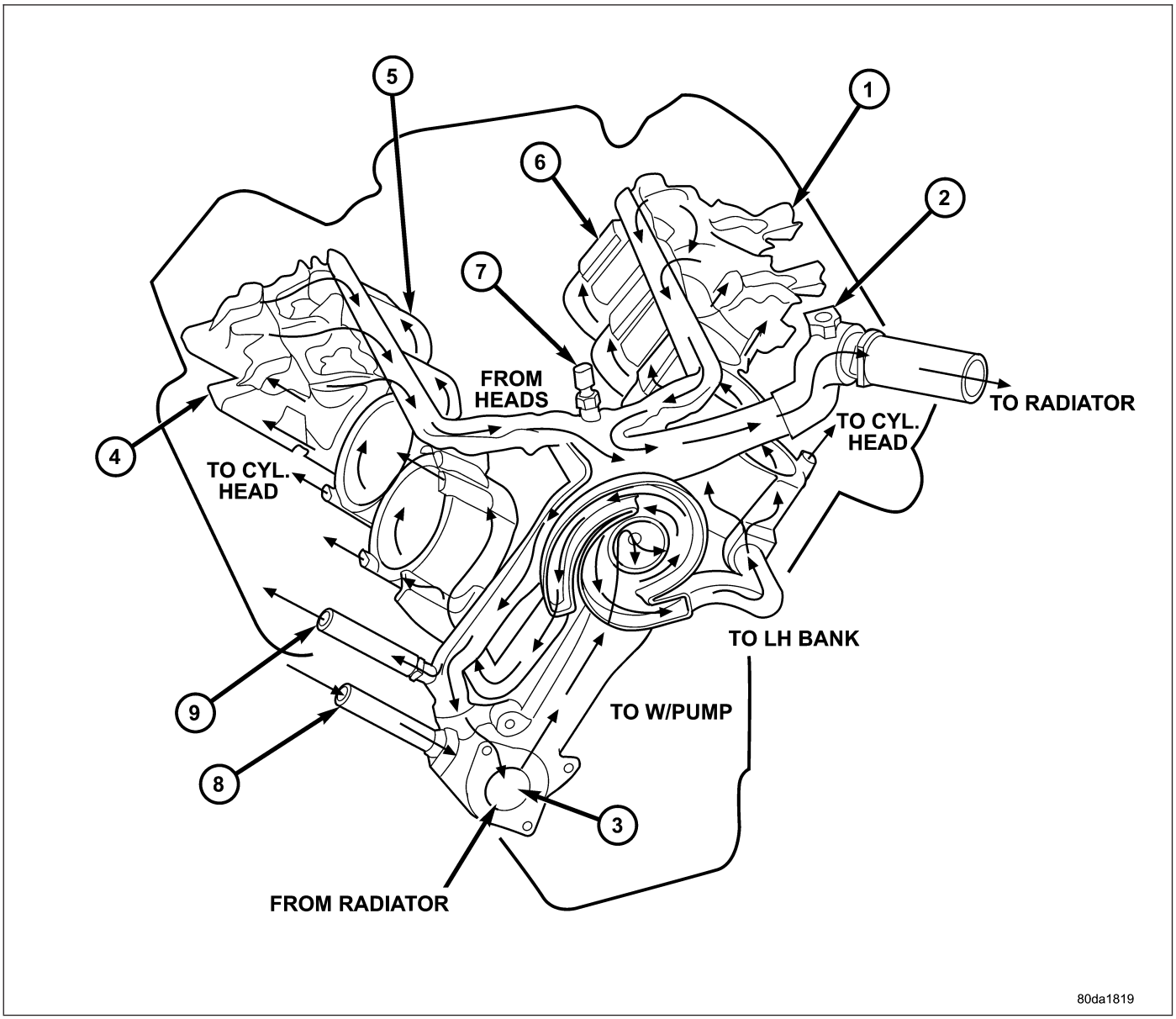

Engine Cooling System Flow - 3.7L/4.7L

The 3.7L/4.7L engine cooling system consists of :

- LH Cylinder Head (1)
- Bleed (2)
- Thermostat location (3)
- RH Cylinder Head (4)
- RH Bank Cyl. Block (5)
- LH Bank Cyl. Block (6)
- Coolant Temp Sensor (7)
- From Heater Core (8)
- To Heater Core (9)

The cooling system regulates engine operating temperature. It allows the engine to reach normal operating temperature as quickly as possible. It also maintains normal operating temperature and prevents overheating.

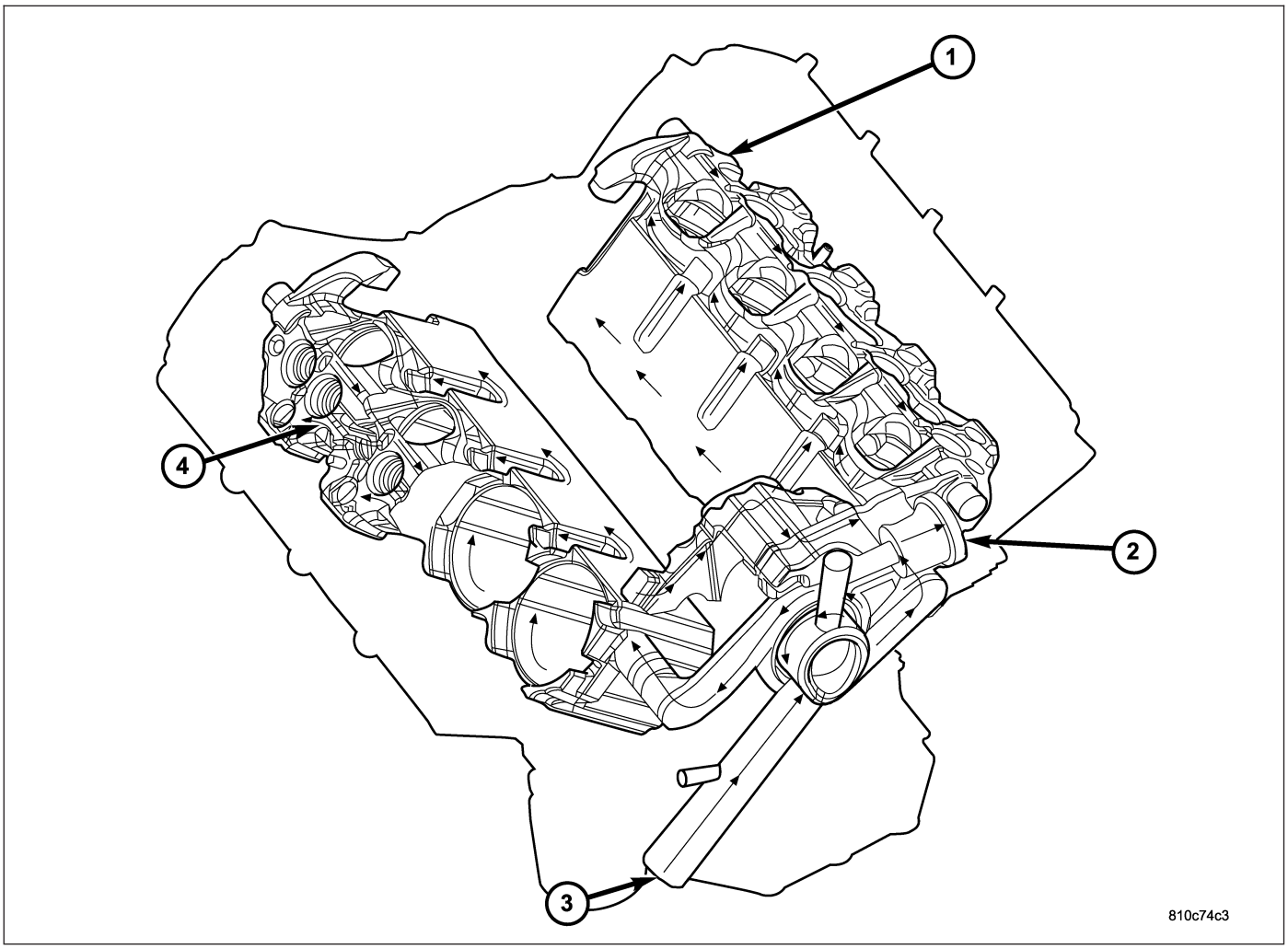

5.7L Engine Coolant System Flow

The 5.7L engine cooling system consists of :

- LH Cylinder Head (1)
- To Radiator (2)
- From Radiator (3)
- To RH Cylinder Head (4)

The cooling system provides a means of heating the passenger compartment and cooling the automatic transmission fluid (if equipped). The cooling system is pressurized and uses a centrifugal water pump to circulate coolant through the system. The coolant recovery/reserve system utilizes an ambient overflow bottle

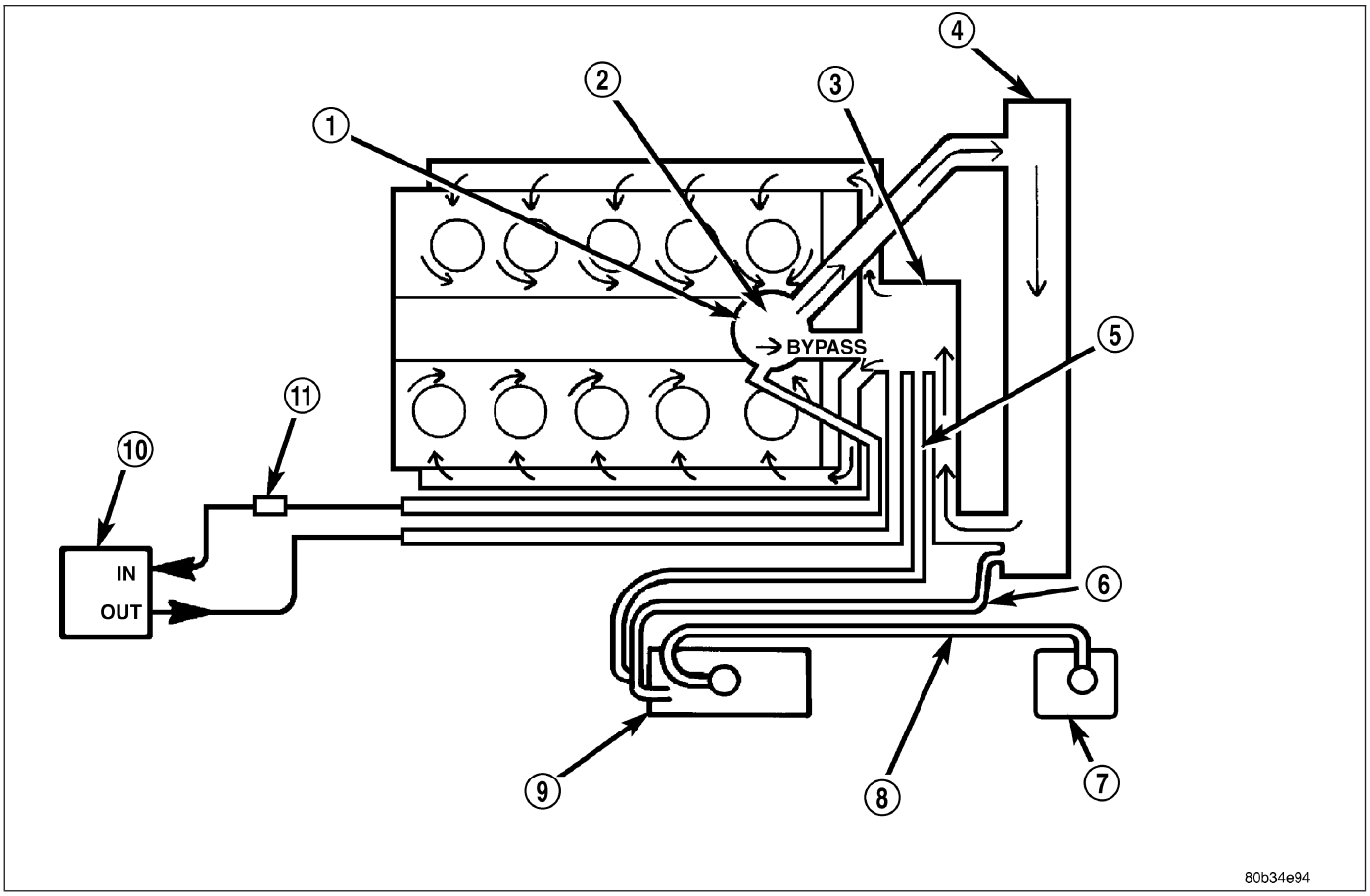

8.3L Cooling System

The 8.3L engine cooling system consists of :

- Thermostat Housing (1)
- Controlled Flow Thermostat (2)
- Water Pump (3)
- Radiator (4)
- Pressure Bottle To Water Pump (5)
- Pressure Bottle To Radiator (6)
- Coolant Recovery Bottle (7)
- Pressure Bottle To Coolant Recovery Bottle (8)
- Coolant Pressure Bottle With Pressure Cap (9)
- Heater Core (10)
- Control Valve (11)

An optional factory installed maximum duty cooling package is available on most models. This package will provide additional cooling capacity for vehicles used under extreme conditions such as trailer towing in high ambient temperatures.

5.9L DIESEL

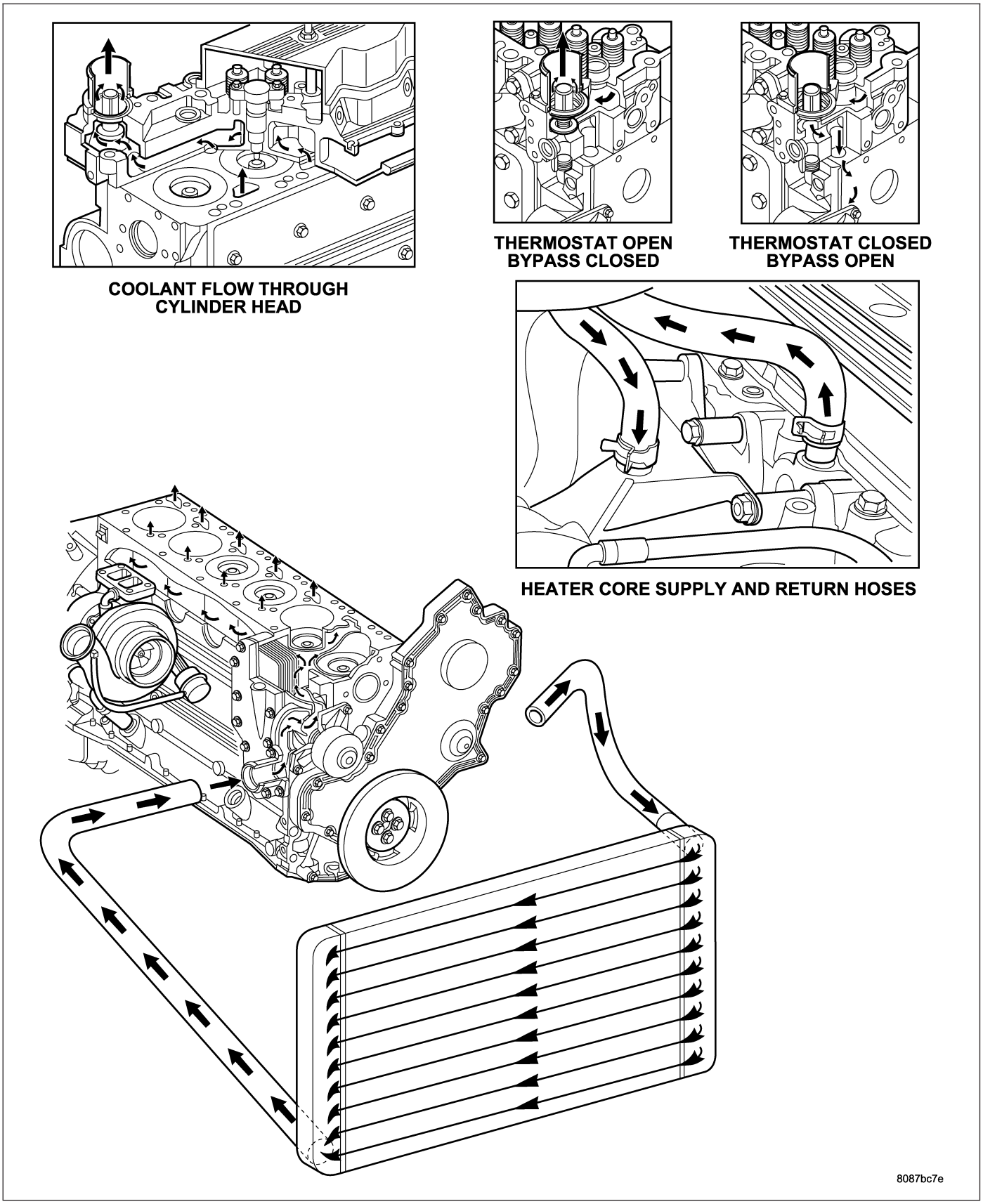

Cooling System Circulation - 5.9L Diesel Engine

The diesel engine cooling system consists of :

- Cross-flow radiator
- Belt driven water pump
- Cooling fan (attached to the electronic viscous fan drive)
- Belt driven Electronic viscous fan drive
- Engine mounted fan shroud
- Radiator pressure cap
- Vertically mounted thermostat
- Coolant reserve/recovery system
- Engine mounted Transmission oil cooler (Automatic Only)
- Radiator mounted fan shroud
- Coolant

HOSE CLAMPS

The cooling system utilizes spring type hose clamps. If a spring type clamp replacement is necessary, replace with the original Mopar® equipment spring type clamp.

CAUTION: A number or letter is stamped into the tongue of constant tension clamps. If replacement is necessary, use only a original equipment clamp with matching number or letter and ensure the clamp has the same size width.

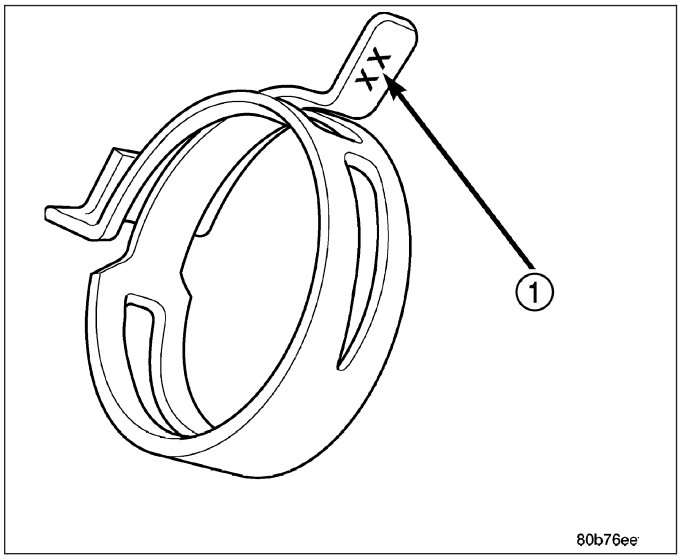

OPERATION

COOLING SYSTEM

The cooling system regulates engine operating temperature. It allows the engine to reach normal operating temperature as quickly as possible. It also maintains normal operating temperature and prevents overheating.

The cooling system also provides a source of hot water (coolant) for heating the passenger compartment and cooling the automatic transmission fluid (if equipped). The cooling system is pressurized and uses a centrifugal water pump to circulate coolant throughout the system.

- When engine is cold the thermostat is closed. The cooling system has no flow through the radiator. The coolant flows through the engine, water pump, and heater.
- When engine is warm the thermostat is full open. The coolant flows through the engine, radiator, heater, and water pump.

All engines utilize an ambient overflow bottle for coolant recovery/reserve.

An optional factory installed maximum duty cooling package is available on most models. This package will provide additional cooling capacity for vehicles used under extreme conditions such as trailer towing in high ambient temperatures.

HOSE CLAMPS

The spring type hose clamp applies constant tension on a hose connection. To remove a spring type hose clamp, only use constant tension clamp pliers designed to compress the hose clamp.

DIAGNOSIS AND TESTING

ON-BOARD DIAGNOSTICS (OBD)

COOLING SYSTEM RELATED DIAGNOSTICS

The Engine Control Module (ECM) has been programmed to monitor certain cooling system components:

- If the engine has remained cool for too long a period, such as with a stuck open thermostat, a Diagnostic Trouble Code (DTC) can be set.
- If an open or shorted condition has developed in the electronically controlled viscous fan clutch circuit, a Diagnostic Trouble Code (DTC) can be set.
- If fan speed is not detected a DTC will be set.
- Coolant temperature sensor circuit problems can set a DTC.

If the problem is sensed in a monitored circuit often enough to indicated an actual problem, a DTC is stored. The DTC will be stored in the ECM memory for eventual display to the service technician. (Refer to 25 - EMISSIONS CONTROL - DESCRIPTION).

ACCESSING DIAGNOSTIC TROUBLE CODES

To read DTC's and to obtain cooling system data, (Refer to 25 - EMISSIONS CONTROL - DESCRIPTION).

ERASING TROUBLE CODES

After the problem has been repaired, use the DRBIII® scan tool to erase a DTC. Refer to the appropriate Powertrain Diagnostic Procedures service information for operation of the DRBIII® scan tool.

COOLING SYSTEM - TESTING FOR LEAKS

ULTRAVIOLET LIGHT METHOD

A leak detection additive is available through the parts department that can be added to cooling system. The additive is highly visible under ultraviolet light (black light). Pour one ounce of additive into cooling system. Place heater control unit in HEAT position. Start and operate the engine until the radiator upper hose is warm to the touch. Aim the commercially available black light tool at the components to be checked. If leaks are present, the black light will cause the additive to glow a bright green color.

The black light can be used in conjunction with a pressure tester to determine if any external leaks exist.

PRESSURE TESTER METHOD

The engine should be at normal operating temperature. Recheck the system cold if the cause of coolant loss is not located during the warm engine examination.

WARNING: HOT, PRESSURIZED COOLANT CAN CAUSE INJURY BY SCALDING.

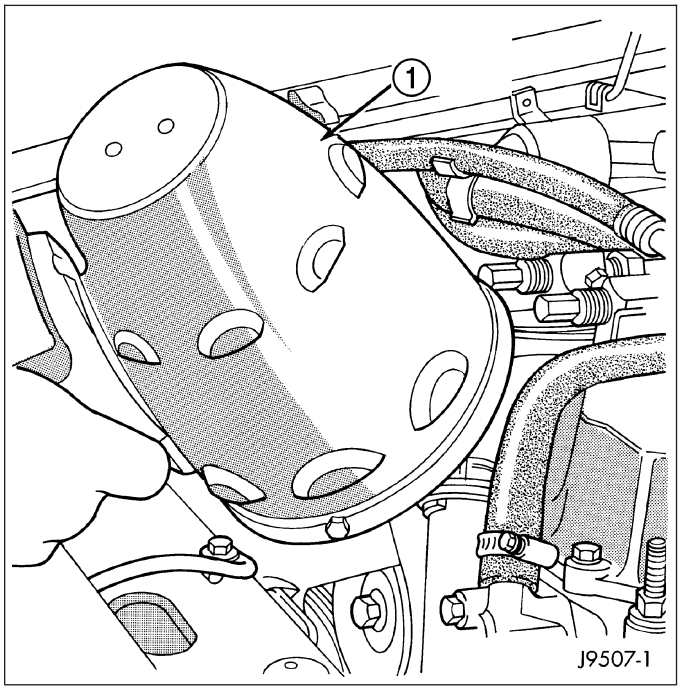

Carefully remove the radiator pressure cap from the filler neck and check the coolant level. Push down on the cap to disengage it from the stop tabs. Wipe the inside of the filler neck and examine the lower inside sealing seat for nicks, cracks, paint, dirt and solder residue. Inspect the radiator-to- reserve/overflow tank hose for internal obstructions. Insert a wire through the hose to be sure it is not obstructed.

Inspect the cams on the outside of the filler neck. If the cams are damaged, seating of the pressure cap valve and tester seal will be affected.

Attach pressure tester (7700 or an equivalent) to radiator filler neck.

Operate the tester pump to apply 103.4 kPa (15 psi) pressure to the system. If the hoses enlarge excessively or bulges while testing, replace as necessary. Observe the gauge pointer and determine the condition of the cooling system according to following criteria:

Holds Steady: If the pointer remains steady for two minutes, serious coolant leaks are not present in system. However, there could be an internal leak that does not appear with normal system test pressure. If it is certain that coolant is being lost and leaks cannot be detected, inspect for interior leakage or perform Internal Leakage Test. Refer to INTERNAL LEAKAGE INSPECTION .

Drops Slowly: Indicates a small leak or seepage is occurring. Examine all of the connections for seepage or slight leakage with a flashlight. Inspect the radiator, hoses, gasket edges and heater. Seal the small leak holes with a Sealer Lubricant (or equivalent). Repair the leak holes and inspect the system again with pressure applied.

Drops Quickly: Indicates that serious leakage is occurring. Examine the system for external leakage. If leaks are not visible, inspect for internal leakage. Large radiator leak holes should be repaired by a reputable radiator repair shop.

INTERNAL LEAKAGE INSPECTION

Remove the engine oil pan drain plug and drain a small amount of engine oil. If coolant is present in the pan, it will drain first because it is heavier than oil. An alternative method is to operate engine for a short period to churn the oil. After this is done, remove the engine dipstick and inspect for water globules. Also inspect the transmission dipstick for water globules and transmission fluid cooler for leakage.

WARNING: WITH RADIATOR PRESSURE TESTER TOOL INSTALLED ON RADIATOR, DO NOT ALLOW PRESSURE TO EXCEED 145 kPa (21 PSI). PRESSURE WILL BUILD UP QUICKLY IF A COMBUSTION LEAK IS PRESENT. TO RELEASE PRESSURE, ROCK TESTER FROM SIDE TO SIDE. WHEN REMOVING TESTER, DO NOT TURN TESTER MORE THAN 1/2 TURN IF SYSTEM IS UNDER PRESSURE.

Operate the engine without the pressure cap on the radiator until the thermostat opens. Attach a Pressure Tester to the filler neck. If pressure builds up quickly it indicates a combustion leak exists. This is usually the result of a cylinder head gasket leak or crack in engine. Repair as necessary.

If there is not an immediate pressure increase, pump the Pressure Tester. Do this until indicated pressure is within system range of 110 kPa (16 psi). Fluctuation of the gauge pointer indicates compression or combustion leakage into cooling system.

Because the vehicle is equipped with a catalytic converter, **do not** short out cylinders to isolate compression leak.

If the needle on dial of the pressure tester does not fluctuate, race engine a few times to check for an abnormal amount of coolant or steam. This would be emitting from exhaust pipe. Coolant or steam from exhaust pipe may indicate a faulty cylinder head gasket, cracked engine cylinder block or cylinder head.

A convenient check for exhaust gas leakage into cooling system is provided by a commercially available Block Leak Check tool. Follow manufacturers instructions when using this product.

COMBUSTION LEAKAGE TEST - WITHOUT PRESSURE TESTER

DO NOT WASTE reusable coolant. If the solution is clean, drain the coolant into a clean container for reuse.

WARNING: DO NOT REMOVE CYLINDER BLOCK DRAIN PLUGS OR LOOSEN RADIATOR DRAINCOCK WITH SYSTEM HOT AND UNDER PRESSURE. SERIOUS BURNS FROM COOLANT CAN OCCUR.

Drain sufficient coolant to allow thermostat removal. (Refer to 7 - COOLING/ENGINE/ENGINE COOLANT THERMOSTAT - REMOVAL). Remove accessory drive belt (Refer to 7 - COOLING/ACCESSORY DRIVE/DRIVE BELTS - REMOVAL).

Add coolant to radiator to bring level to within 6.3 mm (1/4 in) of the top of the thermostat housing.

CAUTION: Avoid overheating. Do not operate engine for an excessive period of time. Open draincock immediately after test to eliminate boil over.

Start engine and accelerate rapidly three times, to approximately 3000 rpm while observing coolant. If internal engine combustion gases are leaking into cooling system, bubbles will appear in coolant. If bubbles do not appear, internal combustion gas leakage is not present.

COOLING SYSTEM DIESEL ENGINE

COOLING SYSTEM DIAGNOSIS - DIESEL ENGINE

CONDITION	POSSIBLE CAUSES	CORRECTION
TEMPERATURE GAUGE READS LOW NOTE: Information on dash cluster is displayed based on broadcast data from ECM. DTC will be set for engine sensor circuit concern.	1. Vehicle is equipped with a heavy duty cooling system.	1. None. System operating normally.
	2. Thermostat stuck open	2. Inspect and test thermostat.
	3. Coolant level low.	3. Fill cooling system. (Refer to 7 - COOLING - STANDARD PROCEDURE)
	4. Temperature gauge not functioning correctly.	4. Check cluster (Refer to 8 - ELECTRICAL/INSTRUMENT CLUSTER - DIAGNOSIS AND TESTING)
	5. Engine sensor stuck in range	5. Monitor sensor with DRB III to verify sensor reading changes with increasing temperature.
	6. Engine sensor failed out of range.	6. A DTC will be set.
	7. Electronically Controlled Viscous Fan Drive not operating properly.	7. Check Electronically Controlled Viscous Fan Drive (Refer to 7 - COOLING/ENGINE/FAN DRIVE VISCOUS CLUTCH - DIAGNOSIS AND TESTING)
TEMPERATURE GAUGE READS HIGH. COOLANT MAY OR MAY NOT BE LEAKING FROM SYSTEM	1. Vehicle overloaded, high ambient (outside) temperatures with A/C turned on, stop and go driving or prolonged operation at idle speeds.	1. Temporary condition, repair not required. Notify customer of vehicle operation instructions located in Owners Manual.

CONDITION	POSSIBLE CAUSES	CORRECTION
NOTE: Information on dash cluster is displayed based on broadcast information from ECM. DTC will be set for engine sensor circuit concern.	2. Temperature gauge not functioning correctly.	2. Check cluster (Refer to 8 - ELECTRICAL/INSTRUMENT CLUSTER - DIAGNOSIS AND TESTING)
	3. Air trapped in cooling system	3. Drain cooling system (Refer to 7 - COOLING - STANDARD PROCEDURE) and refill (Refer to 7 - COOLING - STANDARD PROCEDURE)
	4. Radiator cap faulty.	4. Replace radiator cap.
	5. Plugged A/C or radiator cooling fins.	5. Clean all debris away from A/C and radiator cooling fins.
	6. Coolant mixture incorrect.	6. Drain cooling system (Refer to 7 - COOLING - STANDARD PROCEDURE) refill with correct mixture (Refer to 7 - COOLING - STANDARD PROCEDURE).
	7. Thermostat stuck shut.	7. Inspect and test thermostat. Replace thermostat if necessary.
	8. Bug screen or winter front being used.	8. Remove bug screen or winter front.
	9. Electronically controlled viscous fan drive not operating properly.	9. Check viscous fan (Refer to 7 - COOLING/ENGINE/FAN DRIVE VISCOUS CLUTCH - DIAGNOSIS AND TESTING)
	10. Cylinder head gasket leaking.	10. Check for leaking head gaskets (Refer to 7 - COOLING - DIAGNOSIS AND TESTING).
	11. Heater core leaking.	11. Replace heater core.
	12. Cooling system hoses leaking.	12. Tighten clamps or Replace hoses.
	13. Brakes dragging.	13. Check brakes. (Refer to 5 - BRAKES/HYDRAULIC/ MECHANICAL - DIAGNOSIS AND TESTING)
	14. Accessory drive belt.	14. Inspect. Replace as necessary.
	15. Water Pump.	15. Inspect and replace as necessary.
	16. Engine sensor stuck in range.	16. Monitor sensor with DRBIII to verify sensor reading changes increase in temperature.
	17. Temperature sensor failed out of range.	17. A DTC will be set.
TEMPERATURE GAUGE READING INCONSISTENT (ERRATIC, CYCLES OR FLUCTUATES)	1. Heavy duty cooling system, extreme cold ambient (outside) temperature or heater blower motor in high position.	1. None. System operating normally.

CONDITION	POSSIBLE CAUSES	CORRECTION
NOTE: Information on dash cluster is displayed based on broadcast data from ECM. DTC will be set for engine sensor circuit wiring.	2. Temperature gauge or sensor defective.	2. Check cluster or engine coolant temp sensor (Refer to 8 - ELECTRICAL/INSTRUMENT CLUSTER - DIAGNOSIS AND TESTING)
	3. Temporary heavy usage or load.	3. None. Normal condition.
	4. Air trapped in cooling system.	4. Fill cooling system (Refer to 7 - COOLING - STANDARD PROCEDURE).
	5. Water pump.	5. Replace water pump.
	6. Air leak on suction side of water pump.	6. Check for leak. (Refer to 7 - COOLING - DIAGNOSIS AND TESTING)
RADIATOR CAP LEAKING STEAM AND /OR COOLANT INTO RESERVOIR BOTTLE. (TEMPERATURE GAUGE MAY READ HIGH)	1. Radiator cap defective.	1. Replace radiator cap.
	2. Radiator neck surface damaged.	2. Replace radiator.
HOSE OR HOSES COLLAPSE WHEN ENGINE IS COOLING.	1. Vacuum created in cooling system on engine cool-down is not being relieved through coolant reservoir/overflow system.	1. Replace radiator cap, check vent hose between radiator and reservoir bottle for blockage also check reservoir bottle vent for blockage.
NOISY FAN	1. Fan blade(s) loose, damaged.	1. Replace fan blade assembly.
	2. Electronically controlled viscous fan drive.	2. None. Normal condition.
	3. Fan blades striking surrounding objects.	3. Locate contact point and repair as necessary.
	4. Electronically controlled viscous fan drive bearing concern.	4. Check viscous fan drive (Refer to 7 - COOLING/ENGINE/FAN DRIVE VISCOUS CLUTCH - DIAGNOSIS AND TESTING)
	5. Electronically controlled viscous fan stuck on.	5. Check viscous fan drive (Refer to 7 - COOLING/ENGINE/FAN DRIVE VISCOUS CLUTCH - DIAGNOSIS AND TESTING)
	6. Obstructed air flow through radiator.	6. Remove obstruction.
INADEQUATE AIR CONDITIONER PERFORMANCE (COOLING SYSTEM SUSPECTED)	1. Radiator and/or A/C condenser air flow obstructed.	1. Remove obstruction and/or clean.
	2. Electronically controlled viscous fan drive not working.	2. Check viscous fan drive (Refer to 7 - COOLING/ENGINE/FAN DRIVE VISCOUS CLUTCH - DIAGNOSIS AND TESTING)
	3. Air seals around radiator damaged or missing.	3. Inspect air seals, repair or replace as necessary.

CONDITION	POSSIBLE CAUSES	CORRECTION
INADEQUATE HEATER PERFORMANCE. GAUGE MAY OR MAY NOT READ LOW.	1. Heavy duty cooling system, and cooler ambient temperatures.	1. None. Normal condition.
	2. Obstruction in heater hoses.	2. Remove hoses, remove obstruction.
	3. Electronically controlled viscous fan stuck on.	Check viscous fan drive. (Refer to 7 - COOLING/ENGINE/FAN DRIVE VISCOUS CLUTCH - DIAGNOSIS AND TESTING)
	4. Water pump damaged.	4. Replace water pump.
HEAT ODOR	1. Damaged or missing drive line heat shields.	1. Repair or replace damaged or missing heat shields.
	2. Electronically controlled viscous fan drive damaged.	2. Check viscous fan drive. (Refer to 7 - COOLING/ENGINE/FAN DRIVE VISCOUS CLUTCH - DIAGNOSIS AND TESTING)

PRELIMINARY CHECKS

ENGINE COOLING SYSTEM OVERHEATING

Establish what driving conditions caused the complaint. Abnormal loads on the cooling system such as the following may be the cause:

- PROLONGED IDLE
- VERY HIGH AMBIENT TEMPERATURE
- SLIGHT TAIL WIND AT IDLE
- SLOW TRAFFIC
- TRAFFIC JAMS
- HIGH SPEED OR STEEP GRADES

Driving techniques that avoid overheating are:

- Idle with A/C off when temperature gauge is at end of normal range.
- Increasing engine speed up to 2000 rpm with transmission in park or neutral for more airflow is recommended.

TRAILER TOWING:

Consult Trailer Towing section of owners manual. Do not exceed limits.

RECENT SERVICE OR ACCIDENT REPAIR:

Determine if any recent service has been performed on vehicle that may affect the cooling system. This may be:

- Engine adjustments (incorrect timing)
- Slipping engine accessory drive belt(s)
- Brakes (possibly dragging)
- Changed parts. Incorrect water pump or pump rotating in wrong direction due to belt not correctly routed
- Reconditioned radiator or cooling system refilling (possibly under filled or air trapped in system).
- Service to electrically controlled viscous fan clutch

NOTE: If investigation reveals none of the previous items as a cause for an engine overheating complaint, refer to COOLING SYSTEM DIAGNOSIS CHART BELOW.

These charts are to be used as a quick-reference only. Refer to COOLING SYSTEM DIAGNOSIS CHART

COOLING SYSTEM DIAGNOSIS CHART

CONDITION	POSSIBLE CAUSES	CORRECTION
TEMPERATURE GAUGE READS LOW	1. Has a Diagnostic Trouble Code (DTC) been set indicating a stuck open thermostat?	1. (Refer to 25 - EMISSIONS CONTROL - DESCRIPTION) for On-Board Diagnostics and DTC information. Replace thermostat if necessary.
	2. Is the temperature sending unit connected?	2. Check the temperature sensor connector. (Refer to 8 - ELECTRICAL/INSTRUMENT CLUSTER - SCHEMATIC - ELECTRICAL) Repair connector if necessary.
	3. Is the temperature gauge operating OK?	3. Check gauge operation. (Refer to 8 - ELECTRICAL/INSTRUMENT CLUSTER/ENGINE TEMPERATURE GAUGE - DESCRIPTION) . Repair as necessary.
	4. Coolant level low in cold ambient temperatures accompanied with poor heater performance.	4. Check coolant level in the coolant reserve/overflow tank or degas bottle and the radiator. Inspect system for leaks. Repair leaks as necessary. Refer to the Coolant section of the manual text for WARNINGS and CAUTIONS associated with removing the radiator cap.
	5. Improper operation of internal heater doors or heater controls.	5. Inspect heater and repair as necessary. (Refer to 24 - HEATING & AIR CONDITIONING - DIAGNOSIS AND TESTING) for procedures.

CONDITION	POSSIBLE CAUSES	CORRECTION
TEMPERATURE GAUGE READS HIGH OR THE COOLANT WARNING LAMP ILLUMINATES. COOLANT MAY OR MAY NOT BE LOST OR LEAKING FROM THE COOLING SYSTEM	1. Trailer is being towed, a steep hill is being climbed, vehicle is operated in slow moving traffic, or engine is being idled with very high ambient (outside) temperatures and the air conditioning is on. Higher altitudes could aggravate these conditions.	1. This may be a temporary condition and repair is not necessary. Turn off the air conditioning and attempt to drive the vehicle without any of the previous conditions. Observe the temperature gauge. The gauge should return to the normal range. If the gauge does not return to the normal range, determine the cause for overheating and repair. Refer to Possible Causes (2-18).
	2. Is the temperature gauge reading correctly?	2. Check gauge. (Refer to 8 - ELECTRICAL/INSTRUMENT CLUSTER - SCHEMATIC - ELECTRICAL). Repair as necessary.
	3. Is the temperature warning illuminating unnecessarily?	3. (Refer to 8 - ELECTRICAL/ INSTRUMENT CLUSTER - SCHEMATIC - ELECTRICAL).
	4. Coolant low in coolant reserve/ overflow tank and radiator?	4. Check for coolant leaks and repair as necessary. (Refer to 7 - COOLING - DIAGNOSIS AND TESTING).
	5. Pressure cap not installed tightly. If cap is loose, boiling point of coolant will be lowered. Also refer to the following Step 6.	5. Tighten cap
	6. Poor seals at the radiator cap.	6. (a) Check condition of cap and cap seals. Refer to Radiator Cap. Replace cap if necessary. (b) Check condition of radiator filler neck. If neck is bent or damaged, replace radiator (5.9L Diesel) or degas bottle (3.7L, 4.7L).
	7. Coolant level low in radiator but not in coolant reserve/overflow tank. This means the radiator is not drawing coolant from the coolant reserve/overflow tank as the engine cools (5.9L Diesel).	7. (a) Check condition of radiator cap and cap seals. Refer to Radiator Cap in this Group. Replace cap if necessary. (b) Check condition of radiator filler neck. If neck is bent or damaged, replace radiator. (c) Check condition of the hose from the radiator to the coolant tank. It should fit tight at both ends without any kinks or tears. Replace hose if necessary. (d) Check coolant reserve/overflow tank and tanks hoses for blockage. Repair as necessary.
	8. Incorrect coolant concentration.	8. Check coolant. (Refer to LUBRICATION & MAINTENANCE/ FLUID TYPES - DESCRIPTION).

CONDITION	POSSIBLE CAUSES	CORRECTION
	9. Coolant not flowing through system.	9. Check for coolant flow at radiator filler neck with some coolant removed, engine warm and thermostat open. Coolant should be observed flowing through radiator. If flow is not observed, determine area of obstruction and repair as necessary.
	10. Radiator or A/C condenser fins are dirty or clogged.	10. Remove insects and debris. (Refer to 7 - COOLING - STANDARD PROCEDURE).
	11. Radiator core is corroded or plugged.	11. Have radiator re-cored or replaced.
	12. Fuel or ignition system problems.	12. Refer to 14 - Fuel System or 8 - Electrical for diagnosis and testing procedures.
	13. Dragging brakes.	13. Check and correct as necessary. (Refer to 5 - BRAKES - DIAGNOSIS AND TESTING) for correct procedures.
	14. Bug screen or cardboard is being used, reducing air flow.	14. Remove bug screen or cardboard.
	15. Thermostat partially or completely shut.	15. Check thermostat operation and replace as necessary. (Refer to 7 - COOLING/ENGINE/ENGINE COOLANT THERMOSTAT - REMOVAL).
	16. Viscous fan drive not operating properly.	16. Check fan drive operation and replace as necessary. (Refer to 7 - COOLING/ENGINE/FAN DRIVE VISCOUS CLUTCH - REMOVAL).
	17. Cylinder head gasket leaking.	17. Check for cylinder head gasket leaks. (Refer to 7 - COOLING - DIAGNOSIS AND TESTING).
	18. Heater core leaking.	18. Check heater core for leaks. (Refer to 24 - HEATING & AIR CONDITIONING/PLUMBING - DIAGNOSIS AND TESTING). Repair as necessary.

CONDITION	POSSIBLE CAUSES	CORRECTION
Temperature gauge reading is inconsistent (fluctuates, cycles or is erratic)	1. During cold weather operation, with the heater blower in the high position, the gauge reading may drop slightly.	1. A normal condition. No correction necessary.
	2. Temperature gauge or engine mounted gauge sensor defective or shorted. Also, corroded or loose wiring in this circuit.	2. Check operation of gauge and repair if necessary. (Refer to 8 - ELECTRICAL/INSTRUMENT CLUSTER - DIAGNOSIS AND TESTING).
	3. Gauge reading rises when vehicle is brought to a stop after heavy use (engine still running).	3. A normal condition. No correction is necessary. Gauge should return to normal range after vehicle is driven.
	4. Gauge reading high after re-starting a warmed up (hot) engine.	4. A normal condition. No correction is necessary. The gauge should return to normal range after a few minutes of engine operation.
	5. Coolant level low in radiator (air will build up in the cooling system causing the thermostat to open late).	5. Check and correct coolant leaks. (Refer to 7 - COOLING - DIAGNOSIS AND TESTING).
	6. Cylinder head gasket leaking allowing exhaust gas to enter cooling system causing a thermostat to open late.	6. (a) Check for cylinder head gasket leaks. (Refer to 7 - COOLING - DIAGNOSIS AND TESTING). (b) Check for coolant in the engine oil. Inspect for white steam emitting from the exhaust system. Repair as necessary.
	7. Water pump impeller loose on shaft.	7. Check water pump and replace as necessary. (Refer to 7 - COOLING/ENGINE/WATER PUMP - REMOVAL).
	8. Loose accessory drive belt. (water pump slipping)	8. (Refer to 7 - COOLING/ ACCESSORY DRIVE/DRIVE BELTS - DIAGNOSIS AND TESTING). Check and correct as necessary.
	9. Air leak on the suction side of the water pump allows air to build up in cooling system causing thermostat to open late.	9. Locate leak and repair as necessary.
PRESSURE CAP IS BLOWING OFF STEAM AND/OR COOLANT TO COOLANT TANK. TEMPERATURE GAUGE READING MAY BE ABOVE NORMAL BUT NOT HIGH. COOLANT LEVEL MAY BE HIGH IN COOLANT RESERVE/ OVERFLOW TANK	1. Pressure relief valve in radiator cap is defective.	1. Check condition of radiator cap and cap seals. (Refer to 7 - COOLING/ENGINE/RADIATOR PRESSURE CAP - DIAGNOSIS AND TESTING). Replace cap as necessary.

CONDITION	POSSIBLE CAUSES	CORRECTION
COOLANT LOSS TO THE GROUND WITHOUT PRESSURE CAP BLOWOFF. GAUGE READING HIGH OR HOT	1. Coolant leaks in radiator, cooling system hoses, water pump or engine.	1. Pressure test and repair as necessary. (Refer to 7 - COOLING - DIAGNOSIS AND TESTING).
DETONATION OR PRE-IGNITION (NOT CAUSED BY IGNITION SYSTEM). GAUGE MAY OR MAY NOT BE READING HIGH	1. Engine overheating. 2. Freeze point of coolant not correct. Mixture is too rich or too lean.	1. Check reason for overheating and repair as necessary. 2. Check coolant concentration. (Refer to LUBRICATION & MAINTENANCE/FLUID TYPES - DESCRIPTION).
HOSE OR HOSES COLLAPSE WHILE ENGINE IS RUNNING	1. Vacuum created in cooling system on engine cool-down is not being relieved through coolant reserve/overflow system.	1. (a) Radiator cap relief valve stuck. (Refer to 7 - COOLING/ ENGINE/RADIATOR PRESSURE CAP - DIAGNOSIS AND TESTING). Replace if necessary. (b) Hose between coolant reserve/overflow tank and radiator is kinked. Repair as necessary. (c) Vent at coolant reserve/overflow tank is plugged. Clean vent and repair as necessary. (d) Reserve/overflow tank is internally blocked or plugged. Check for blockage and repair as necessary.
NOISY VISCOUS FAN/DRIVE	1. Fan blades loose. 2. Fan blades striking a surrounding object. 3. Air obstructions at radiator or air conditioning condenser. 4. Thermal viscous fan drive has defective bearing. 5. A certain amount of fan noise may be evident on models equipped with a thermal viscous fan drive. Some of this noise is normal.	1. Replace fan blade assembly. (Refer to 7 - COOLING/ENGINE/ RADIATOR FAN - REMOVAL) 2. Locate point of fan blade contact and repair as necessary. 3. Remove obstructions and/or clean debris or insects from radiator or A/C condenser. 4. Replace fan drive. Bearing is not serviceable. (Refer to 7 - COOLING/ ENGINE/FAN DRIVE VISCOUS CLUTCH - REMOVAL). 5. (Refer to 7 - COOLING/ENGINE/ FAN DRIVE VISCOUS CLUTCH - DESCRIPTION) for an explanation of normal fan noise.

CONDITION	POSSIBLE CAUSES	CORRECTION
INADEQUATE HEATER PERFORMANCE. THERMOSTAT FAILED IN OPEN POSITION	1. Has a Diagnostic trouble Code (DTC) been set?	1. (Refer to 25 - EMISSIONS CONTROL - DESCRIPTION) for correct procedures and replace thermostat if necessary
	2. Coolant level low.	2. (Refer to 7 - COOLING - DIAGNOSIS AND TESTING).
	3. Obstructions in heater hose/ fittings.	3. Remove heater hoses at both ends and check for obstructions.
	4. Heater hose kinked.	4. Locate kinked area and repair as necessary.
	5. Water pump is not pumping water to/through the heater core. When the engine is fully warmed up, both heater hoses should be hot to the touch. If only one of the hoses is hot, the water pump may not be operating correctly or the heater core may be plugged. Accessory drive belt may be slipping causing poor water pump operation.	5. (Refer to 7 - COOLING/ENGINE/ WATER PUMP - REMOVAL). If a slipping belt is detected, (Refer to 7 - COOLING/ACCESSORY DRIVE/DRIVE BELTS - DIAGNOSIS AND TESTING). If heater core obstruction is detected, (Refer to 24 - HEATING; AIR CONDITIONING/ PLUMBING/HEATER CORE - REMOVAL).
STEAM IS COMING FROM THE FRONT OF VEHICLE NEAR THE GRILL AREA WHEN WEATHER IS WET, ENGINE IS WARMED UP AND RUNNING, AND VEHICLE IS STATIONARY. TEMPERATURE GAUGE IS IN NORMAL RANGE	1. During wet weather, moisture (snow, ice or rain condensation) on the radiator will evaporate when the thermostat opens. This opening allows heated water into the radiator. When the moisture contacts the hot radiator, steam may be emitted. This usually occurs in cold weather with no fan or air flow to blow it away.	1. Occasional steam emitting from this area is normal. No repair is necessary.
COOLANT COLOR	1. Coolant color is not necessarily an indication of adequate corrosion or temperature protection. Do not rely on coolant color for determining condition of coolant.	1. (Refer to LUBRICATION & MAINTENANCE/FLUID TYPES - DESCRIPTION) Adjust coolant mixture as necessary.
COOLANT LEVEL CHANGES IN COOLANT RESERVE/OVERFLOW TANK. TEMPERATURE GAUGE IS IN NORMAL RANGE	1. Level changes are to be expected as coolant volume fluctuates with engine temperature. If the level in the tank was between the FULL and ADD marks at normal operating temperature, the level should return to within that range after operation at elevated temperatures.	1. A normal condition. No repair is necessary.

STANDARD PROCEDURE

COOLANT LEVEL CHECK

NOTE: Do not remove radiator cap for routine coolant level inspections. The coolant level can be checked at coolant recovery bottle or the coolant degas bottle.

WARNING: DO NOT REMOVE OR LOOSEN THE RADIATOR CAP WITH THE COOLING SYSTEM HOT AND UNDER PRESSURE. SERIOUS BURNS FROM COOLANT OR HIGH PRESSURE STEAM CAN OCCUR.

The coolant reserve/overflow system provides a quick method for determining the coolant level without removing the radiator pressure cap. With the engine at normal operating temperature and idling, observe the level of the coolant on the external level indicator on the side of the coolant reserve / overflow bottle. The coolant level should be between the MIN and MAX marks. If the coolant is below the MIN mark, add coolant (Refer to LUBRICATION & MAINTENANCE/FLUID TYPES - DESCRIPTION) to the bottle until the level reaches the MIN mark. **Do Not Overfill the bottle by adding fluid above the MAX line.** This may cause coolant to spill onto the ground during subsequent vehicle operation.

COOLING SYSTEM CLEANING/REVERSE FLUSHING

CLEANING

Drain the cooling system and refill with water. Run the engine with the radiator cap installed until the upper radiator hose is hot. Stop the engine and drain the water from system. If the water is dirty, fill the system with water, run the engine and drain the system. Repeat this procedure until the water drains clean.

REVERSE FLUSHING

Reverse flushing of the cooling system is the forcing of water through the cooling system. This is done using air pressure in the opposite direction of normal coolant flow. It is usually only necessary with very dirty systems with evidence of partial plugging.

REVERSE FLUSHING RADIATOR

Disconnect the radiator hoses from the radiator inlet and outlet. Attach a section of the radiator hose to the radiator bottom outlet fitting and insert the flushing gun. Connect a water supply hose and air supply hose to the flushing gun.

CAUTION: Internal radiator pressure must not exceed 138 kPa (20 psi) as damage to radiator may result.

Allow the radiator to fill with water. When the radiator is filled, apply air in short blasts. Allow the radiator to refill between blasts. Continue this reverse flushing until clean water flows out through the rear of the radiator cooling tube passages.

REVERSE FLUSHING ENGINE

Drain the cooling system. Remove the thermostat housing and thermostat. Install the thermostat housing. Disconnect the radiator upper hose from the radiator and attach the flushing gun to the hose. Disconnect the radiator lower hose from the water pump and attach a lead-away hose to the water pump inlet fitting.

CAUTION: On vehicles equipped with a heater water control valve, be sure the heater control valve is closed (heat off). This will prevent coolant flow with scale and other deposits from entering the heater core.

Connect the water supply hose and air supply hose to flushing gun. Allow the engine to fill with water. When the engine is filled, apply air in short blasts, allowing the system to fill between air blasts. Continue until clean water flows through the lead away hose.

Remove the lead away hose, flushing gun, water supply hose and air supply hose. Remove the thermostat housing and install the thermostat. Install the thermostat housing with a replacement gasket. Refer to Thermostat Replacement. Connect the radiator hoses. Refill the cooling system with the correct antifreeze/water mixture (Refer to LUBRICATION & MAINTENANCE/FLUID TYPES - DESCRIPTION). Refer to Refilling the Cooling System.

CHEMICAL CLEANING

In some instances, use a radiator cleaner (Mopar® Radiator Kleen or equivalent) before flushing. This will soften scale and other deposits and aid flushing operation.

CAUTION: Follow manufacturers instructions when using these products.

DRAINING COOLING SYSTEM - ALL GAS ENGINES

WARNING: DO NOT REMOVE CYLINDER BLOCK DRAIN PLUGS OR LOOSEN RADIATOR DRAINCOCK WITH SYSTEM HOT AND UNDER PRESSURE. SERIOUS BURNS FROM COOLANT CAN OCCUR.

DO NOT WASTE reusable coolant. If solution is clean, drain coolant into a clean container for reuse.

1. Attach one end of a hose to the draincock. Put the other end into a clean container.
2. **DO NOT REMOVE THE RADIATOR CAP** when draining the coolant from the reservoir/overflow tank. Open radiator draincock and when the tank is empty, remove the radiator cap and continue draining the cooling system.
3. If draining the entire engine, remove the cylinder block drain plugs (1).

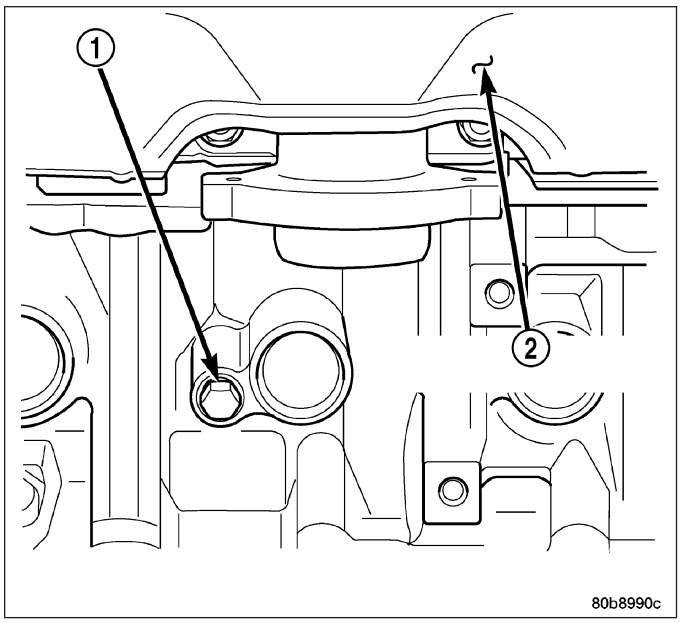

REFILLING COOLING SYSTEM - ALL GAS ENGINES

The use of aluminum cylinder blocks, cylinder heads and water pumps requires special corrosion protection. In order to maintain the required protection for these components and cooling system performance, only use the appropriate fluid (Refer to LUBRICATION & MAINTENANCE/FLUID TYPES - DESCRIPTION) when servicing the vehicle. This coolant offers the best engine cooling without corrosion when mixed with 50% distilled water to obtain a freeze point of -37°C (-35°F). If it loses color or becomes contaminated, drain, flush, and replace with fresh properly mixed coolant solution.

WARNING: DO NOT REMOVE CYLINDER BLOCK DRAIN PLUGS OR LOOSEN RADIATOR DRAINCOCK WITH SYSTEM HOT AND UNDER PRESSURE. SERIOUS BURNS FROM COOLANT CAN OCCUR.

DO NOT WASTE reusable coolant. If solution is clean, drain coolant into a clean container for reuse.

Clean cooling system prior to refilling. (Refer to 7 - COOLING - STANDARD PROCEDURE).

1. Install cylinder block drain plugs. Coat the threads with Mopar® Thread Sealant with Teflon.
2. Close radiator petcock.
3. Fill cooling system with the antifreeze mixture (Refer to LUBRICATION & MAINTENANCE/FLUID TYPES - DESCRIPTION).
4. Fill coolant reserve/overflow tank to MAX mark on bottle.
5. Start and operate engine until thermostat opens (upper radiator hose warm to touch).
6. If necessary, add antifreeze mixture to the coolant reserve/overflow tank. This is done to maintain coolant level between the MAX and MIN marks. The level in the reserve/overflow tank may drop below the MIN mark after three or four warm-up and cool-down cycles.

DRAINING COOLING SYSTEM - 5.9L DIESEL ENGINE

WARNING: DO NOT REMOVE THE CYLINDER BLOCK DRAIN PLUGS OR LOOSEN THE RADIATOR DRAIN PLUG WITH SYSTEM HOT AND UNDER PRESSURE. SERIOUS BURNS FROM COOLANT CAN OCCUR.

DO NOT WASTE reusable coolant. If the solution is clean, drain the coolant into a clean container for reuse.

1. Start the engine and place the heater control temperature selector in the Full-On position.
2. Turn the ignition off.
3. Do not remove radiator cap when draining coolant from reserve/overflow tank. Open radiator drain plug and when tank is empty, remove radiator cap. If the coolant reserve/overflow tank does not drain, (Refer to 7 - COOLING - DIAGNOSIS AND TESTING). The coolant need not be removed from tank unless the system is being refilled with fresh mixture.
4. Remove radiator pressure cap.

REFILLING COOLING SYSTEM - 5.9L DIESEL ENGINE

Clean cooling system prior to refilling (Refer to 7 - COOLING - STANDARD PROCEDURE).

1. Close radiator drain plug.

CAUTION: Due to the use of the one-way check valve, the engine must not be operating when refilling the cooling system.

NOTE: The diesel engine is equipped with two one-way check valves (jiggle pins). The check valves are used as a servicing feature and will vent air when the system is being filled. Water pressure (or flow) will hold the valves closed.

2. Fill the cooling system with a 50/50 mixture of distilled water and antifreeze.
3. Fill coolant reserve/overflow tank to the FULL mark.
4. Start and operate engine until thermostat opens. Upper radiator hose should be warm to touch.
5. If necessary, add 50/50 water and antifreeze mixture to the coolant reserve/overflow tank to maintain coolant level. This level should be between the ADD and FULL marks. The level in the reserve/overflow tank may drop below the ADD mark after three or four warm-up and cool-down cycles.

ADDING ADDITIONAL COOLANT

The use of aluminum cylinder blocks, cylinder heads and water pumps requires special corrosion protection. In order to maintain the required protection for these components and cooling system performance, only use the appropriate fluid (Refer to LUBRICATION & MAINTENANCE/FLUID TYPES - DESCRIPTION) when servicing the vehicle. This coolant offers the best engine cooling without corrosion when mixed with 50% distilled water to obtain a freeze point of -37°C (-35°F). If it loses color or becomes contaminated, drain, flush, and replace with fresh properly mixed coolant solution. This coolant offers the best engine cooling without corrosion when mixed with 50% distilled water to obtain a freeze point of -37°C (-35°F). If it loses color or becomes contaminated, drain, flush, and replace with fresh properly mixed coolant solution.

CAUTION: Do not use coolant additives that are claimed to improve engine cooling.

Do not remove the radiator cap to add coolant to the system. When adding coolant to maintain the correct level, do so only at the reserve/overflow bottle. Remove the radiator cap only for testing or when refilling the system after service. Removing the cap unnecessarily can cause loss of coolant and allow air to enter the system, which produces corrosion.

WARNING: DO NOT REMOVE OR LOOSEN THE RADIATOR CAP WITH THE COOLING SYSTEM HOT AND UNDER PRESSURE. SERIOUS BURNS FROM THE COOLANT OR HIGH PRESSURE STEAM CAN OCCUR.

SPECIFICATIONS

TORQUE

DESCRIPTION	N·m	Ft. Lbs.	In. Lbs.
Bolt - Automatic Belt Tensioner to Block	41	30	-
Bolt - Automatic Belt Tensioner Pulley	61	45	-
Bolt - Automatic Belt Tensioner Pulley - Diesel	43	32	-
Engine Mounted Fan Shroud Brackets (Upper and Lower)	24	18	-
Fan Shroud Ring to Fan Shroud Brackets	24	18	-
Bolt - Block Heater	2	-	17
Bolts - Generator/Compressor Mounting Bracket			
# 1 and 2	54	40	-
# 3	40	30	-
Bolts - Generator/Compressor Mounting Bracket - Diesel	24	18	-
Bolts - Fan Shroud to Radiator Mounting - All Except 5.9L Diesel	6	-	55
5.9L Diesel	12	-	105
Bolts - Radiator to Support	8	-	75
Bolts - Fan Blade to Viscous Fan Drive	24	18	-
Fan Drive - All Except 8.0L/5.9L Diesel	50	37	-
8.0L/5.9L Diesel	115	85	-
Bolt - Idler Pulley	54	40	-
Bolt - Idler Pulley - Diesel	43	32	-
Bolts - Thermostat Housing - All Except 5.9L Diesel	13	-	112
Bolts - Thermostat Housing 5.9L	23	16	-
Bolts - Thermostat Housing - Diesel	10	-	89
Bolts - Power Steering Oil Cooler	8	-	75
Bolts - Transmission Auxiliary Oil Cooler	6	-	55
Nuts - Transmission Oil Cooler Tube	31	24	-
Bolts - Coolant Bottle	8	-	75
Tube Nuts - Transmission Oil Cooler to Transmission			
5.9L/46RE	31	24	-
3.7L/4.7L/5.7L/45RFE	20	18	-
Bolts - Water Pump - Diesel	24	18	-
Bolts - Water Pump - 4.7L	58	43	-
Block Heater - Diesel	75	55	-
Transmission Oil Cooler - Diesel			
M8	24	18	-
M12	77	57	-

SPECIFICATIONS - FILL VOLUMES

DESCRIPTION	SPECIFICATION	
	Metric	Standard
3.7L Engine	4.7L	5 qts
4.7L Engine	5.6L	6.0 qts.
5.7L Engine	6.6L	7.0 qts.
8.3L SRT-10 Engine Oil Service Quanity	8.9L	8.75 qts.
8.3L SRT-10 Engine Overhaul Quanity	9.4L	10.0 qts.
5.9L Diesel Engine	28L	29.5 qts.

SPECIAL TOOLS

COOLING

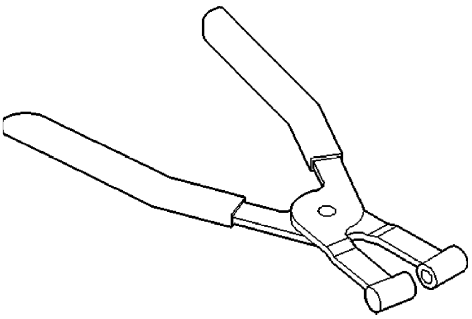

Pliers Constant Pressure Hose Clamp - 6094

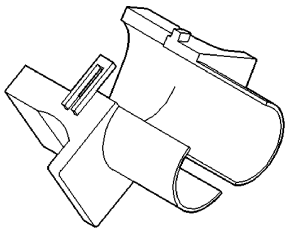

3/8" Quick Connect Release Tool - 6935

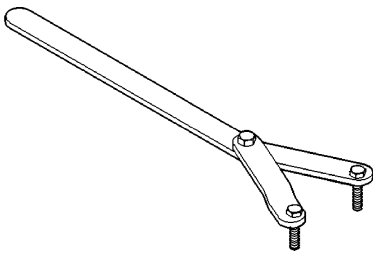

Spanner Wrench - 6958

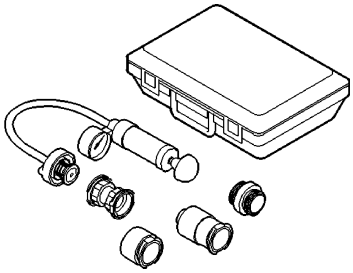

Cooling System Pressure Tester - 7700A

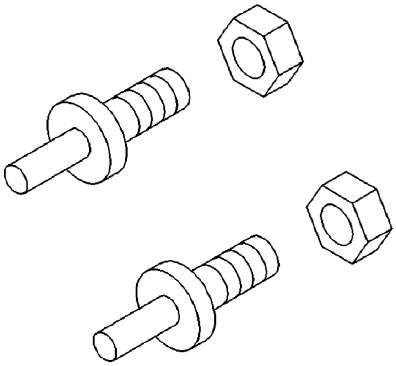

Adapter Pins 8346

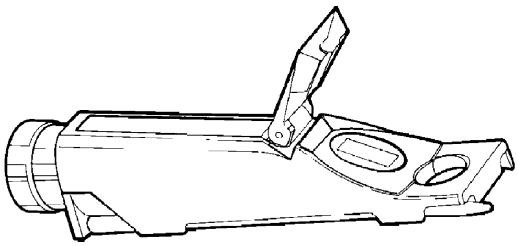

Coolant Refractometer 8286

ACCESSORY DRIVE

TABLE OF CONTENTS

page

TENSIONER-BELT
DESCRIPTION 26
OPERATION 26
REMOVAL
3.7L/4.7L ENGINE 26
5.7L ENGINE 27
5.9L DIESEL 27
8.3L ENGINE 28
INSTALLATION
3.7L/4.7L ENGINE 28
5.7L ENGINE 29
5.9L DIESEL 29
8.3L ENGINE 30

page

BELT-DRIVE
DIAGNOSIS AND TESTING
ACCESSORY DRIVE BELT 31
REMOVAL
3.7L/4.7L ENGINE 33
5.7L ENGINE 34
5.9L DIESEL 34
8.3L ENGINE 35
INSTALLATION
3.7L/4.7L ENGINE 36
5.7L ENGINE 37
5.9L DIESEL 37
8.3L ENGINE 38

TENSIONER-BELT

DESCRIPTION

Correct drive belt tension is required to ensure optimum performance of the belt driven engine accessories. If specified tension is not maintained, belt slippage may cause; engine overheating, lack of power steering assist, loss of air conditioning capacity, reduced generator output rate, and greatly reduced belt life.

It is not necessary to adjust belt tension. All engines are equipped with an automatic belt tensioner. The tensioner maintains correct belt tension at all times.

CAUTION: Do not attempt to check belt tension with a belt tension gauge on vehicles equipped with an automatic belt tensioner.

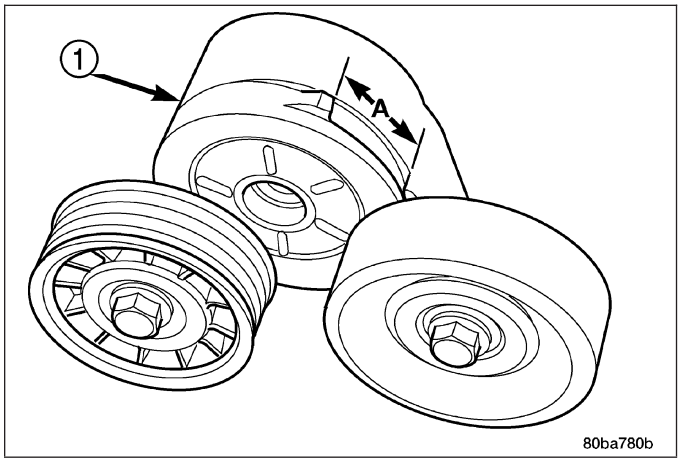

OPERATION

The automatic belt tensioner maintains belt tension by using internal spring pressure, a pivoting arm and pulley to press against the drive belt.

REMOVAL

3.7L/4.7L ENGINE

On 3.7L and 4.7L engines, the tensioner is equipped with an indexing tang on back of tensioner and an indexing stop on tensioner housing. If a new belt is being installed, tang must be within approximately 24 mm (.94 inches) of indexing stop. Belt is considered new if it has been used 15 minutes or less.

If the above specification cannot be met, check for:

- The wrong belt being installed (incorrect length/width)
- Worn bearings on an engine accessory (A/C compressor, power steering pump, water pump, idler pulley or generator)
- A pulley on an engine accessory being loose
- Misalignment of an engine accessory
- Belt incorrectly routed.

NOTE: A used belt should be replaced if tensioner indexing arrow has moved to the minimum tension indicator. Tensioner travel stops at this point.

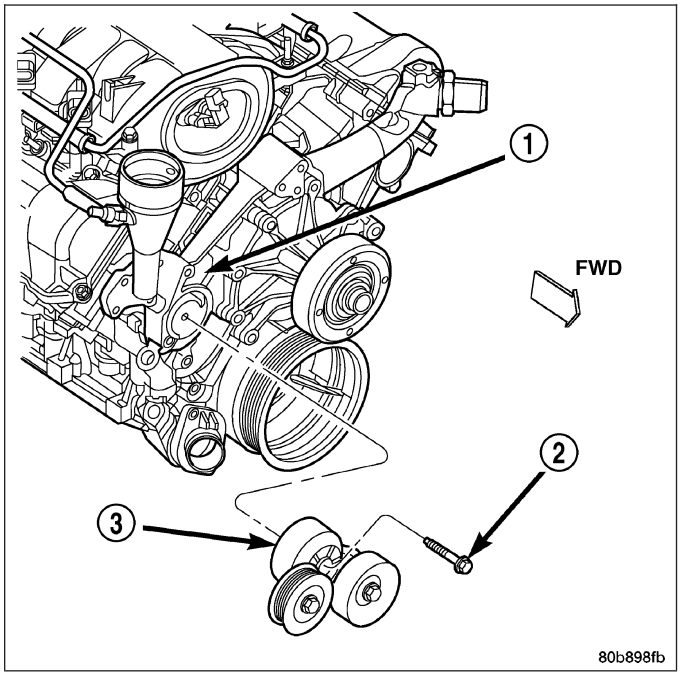

1. Remove accessory drive belt (Refer to 7 - COOLING/ACCESSORY DRIVE/DRIVE BELTS - REMOVAL).
2. Remove tensioner (3) assembly from mounting bracket.

WARNING: BECAUSE OF HIGH SPRING PRESSURE, DO NOT ATTEMPT TO DISASSEMBLE AUTOMATIC TENSIONER. UNIT IS SERVICED AS AN ASSEMBLY EXCEPT FOR PULLEY ON TENSIONER.

3. Remove pulley bolt. Remove pulley from tensioner.

5.7L ENGINE

1. Remove accessory drive belt (Refer to 7 - COOLING/ACCESSORY DRIVE/DRIVE BELTS - REMOVAL).
2. Remove tensioner (1) and mounting bracket.
3. Remove the tensioner assembly from the mounting bracket.

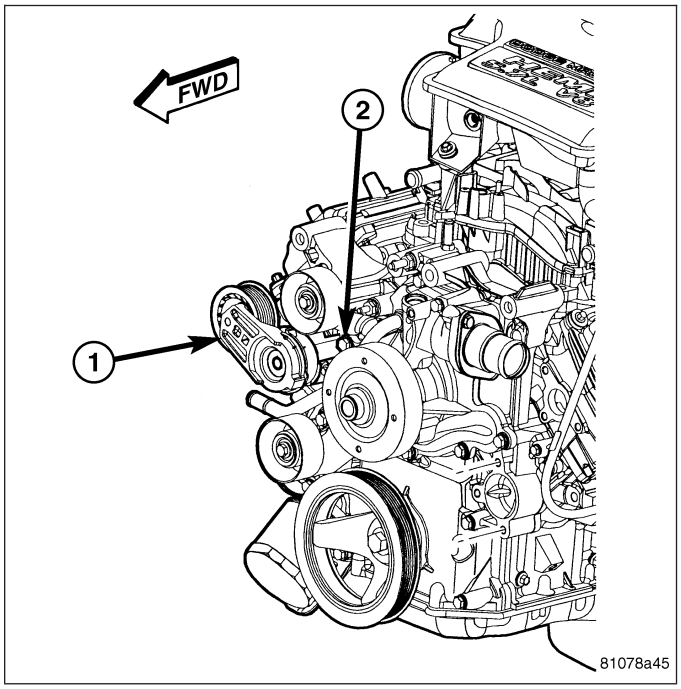

5.9L DIESEL

The 5.9L diesel engine accessory drive system (with a/c) consists of :

- Generator Pulley (1)
- Water Pump Pulley (2)
- Idler Pulley (3)
- Power Steering Pump Pulley (4)
- Radiator Fan Pulley (5)
- Crankshaft Pulley (6)
- Automatic Tensioner (7)
- A/C Compressor Pump Pulley (8)

WARNING: BECAUSE OF HIGH SPRING PRESSURE, DO NOT ATTEMPT TO DISASSEMBLE AUTOMATIC TENSIONER. UNIT IS SERVICED AS AN ASSEMBLY.

1. Remove accessory drive belt (Refer to 7 - COOLING/ACCESSORY DRIVE/DRIVE BELTS - REMOVAL).
2. Remove tensioner mounting bolt and remove tensioner (7).

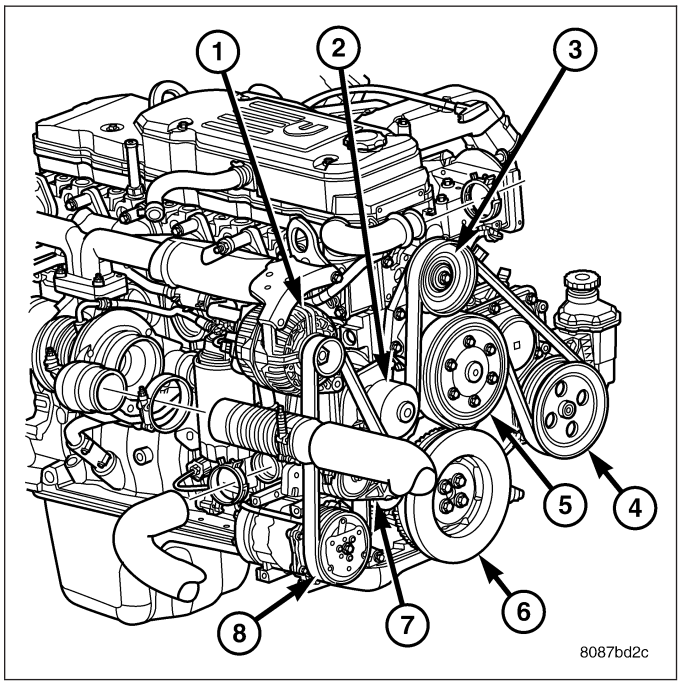

8.3L ENGINE

1. Remove the air intake tube between intake manifold and air filter assembly (Refer to 9 - ENGINE/ AIR INTAKE SYSTEM/AIR CLEANER ELEMENT - REMOVAL).
2. Release the belt tension by rotating the tensioner **counterclockwise** with a 15 mm wrench on the tensioner pulley bolt. Rotate belt tensioner until belt can be removed from pulleys.
3. Remove accessory drive belt.
4. Gently release tensioner.
5. Remove tensioner mounting nut (1) .

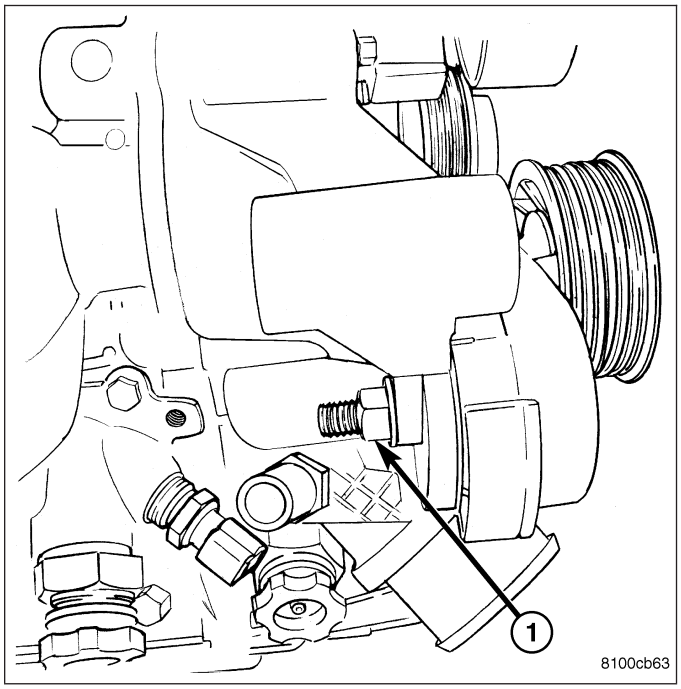

INSTALLATION

3.7L/4.7L ENGINE

1. Install pulley and pulley bolt to tensioner (3). Tighten bolt to 61 N·m (45 ft. lbs.) torque.
2. An indexing slot is located on back of tensioner (3). Align this slot to the head of the bolt on the front cover. Install the mounting bolt. Tighten bolt (2) to 41 N·m (30 ft. lbs.).
3. Install accessory drive belt (Refer to 7 - COOLING/ ACCESSORY DRIVE/DRIVE BELTS - INSTALLATION).
4. Check belt indexing marks.

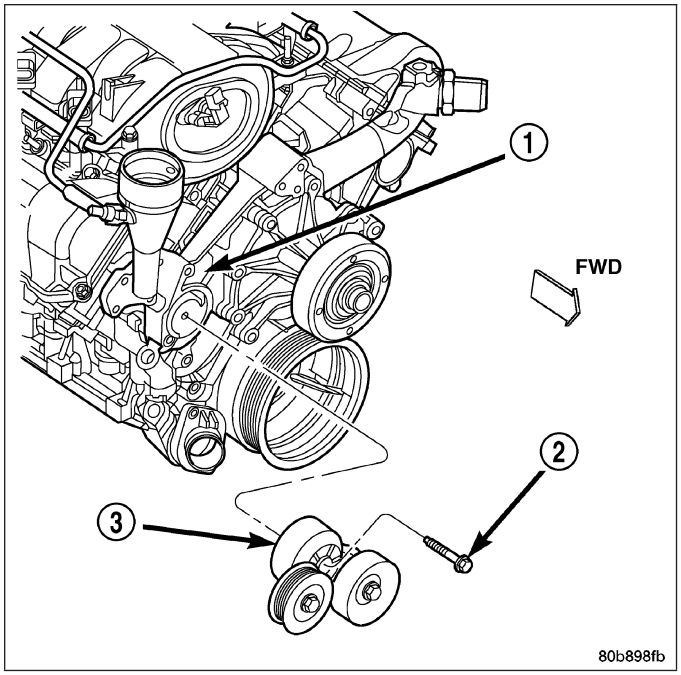

5.7L ENGINE

1. Install tensioner (1) on to the mounting bracket. Tighten bolt (2) to 41 N·m (30 ft. lbs.).
2. Install tensioner and bracket assembly
3. Install accessory drive belt (Refer to 7 - COOLING/ ACCESSORY DRIVE/DRIVE BELTS - INSTALLATION).

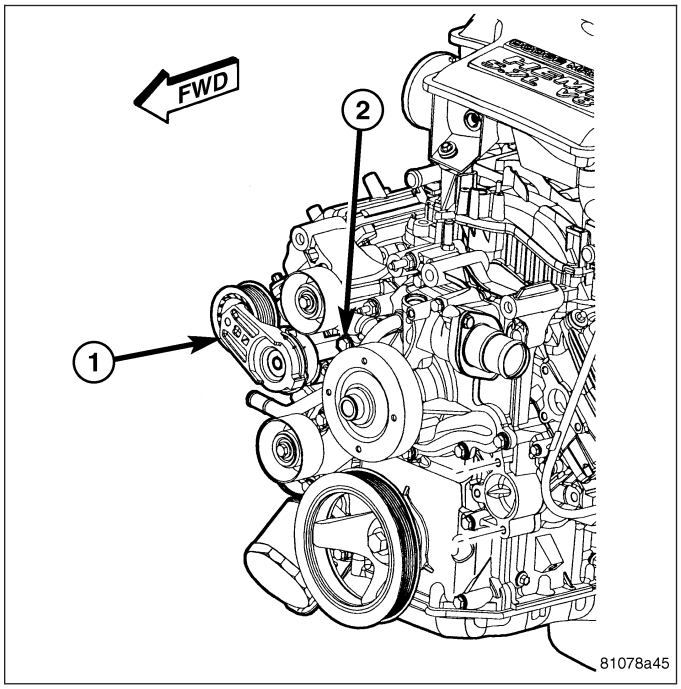

5.9L DIESEL

The 5.9L diesel engine accessory drive system (with a/c) consists of :

- Generator Pulley (1)
- Water Pump Pulley (2)
- Idler Pulley (3)
- Power Steering Pump Pulley (4)
- Radiator Fan Pulley (5)
- Crankshaft Pulley (6)
- Automatic Tensioner (7)
- A/C Compressor Pump Pulley (8)

1. Install tensioner assembly (7) to water inlet bracket. A dowel is located on back of tensioner. Align this dowel to hole in tensioner mounting bracket. Tighten bolt to 43 N·m (32 ft. lbs.) torque.
2. Install drive belt (Refer to 7 - COOLING/ACCESSORY DRIVE/DRIVE BELTS - INSTALLATION).

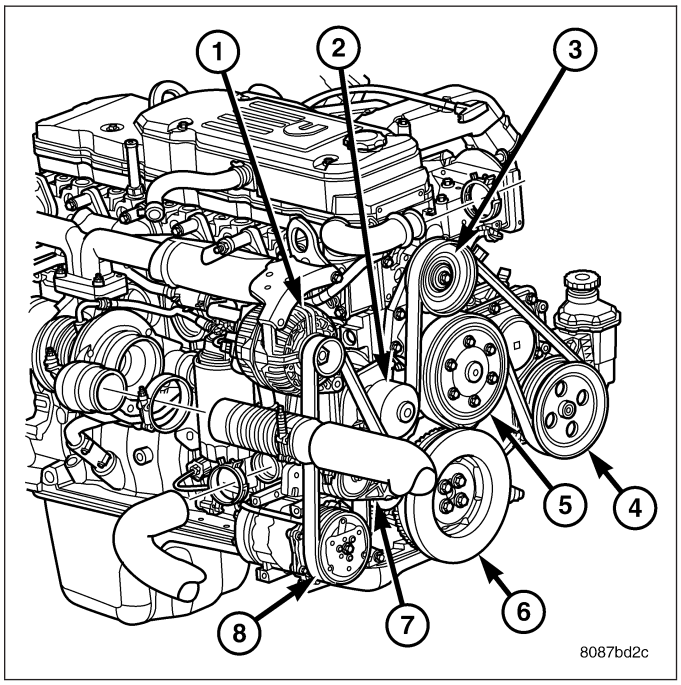

8.3L ENGINE

NOTE: When installing accessory drive belt onto pulleys, make sure that belt is properly routed and all V-grooves make proper contact with pulleys.

1. Install tensioner and mounting nut (1). Torque mounting nut to 41 N·m (30 ft. lbs.).
2. Install accessory drive belt (Refer to 7 - COOLING/ ACCESSORY DRIVE/DRIVE BELTS - INSTALLATION).
3. Install the air intake tube between intake manifold and air filter assembly.

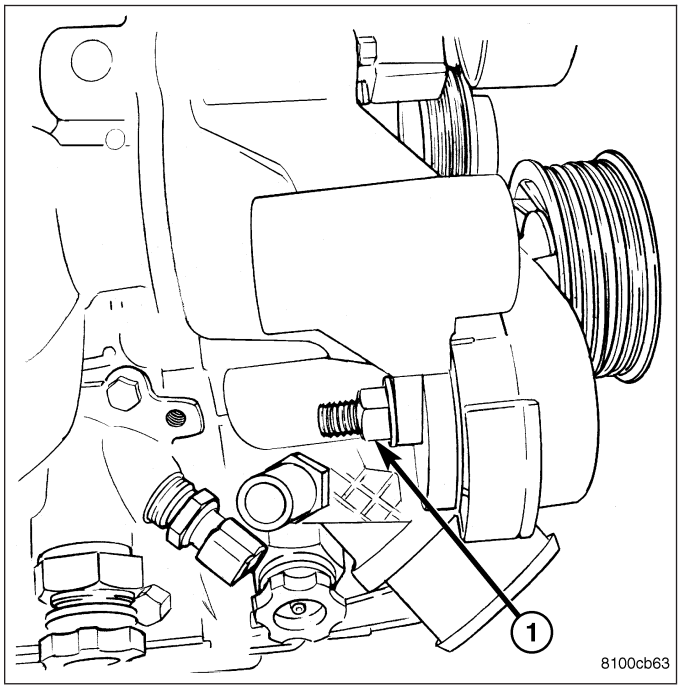

BELT-DRIVE

DIAGNOSIS AND TESTING

ACCESSORY DRIVE BELT

VISUAL DIAGNOSIS

NOTE: 5.9L DIesel Engine - If a belt is broken or frayed, inspect engine speed sensor (located near the crankshaft damper) for damage.

When diagnosing serpentine accessory drive belts, small cracks that run across the ribbed surface of the belt from rib to rib , are considered normal. These are not a reason to replace the belt. However, cracks running along a rib (not across) are **not** normal. Any belt with cracks running along a rib must be replaced. Also replace the belt if it has excessive wear, frayed cords or severe glazing.

Refer to ACCESSORY DRIVE BELT DIAGNOSIS CHART for further belt diagnosis.

NOISE DIAGNOSIS

Noises generated by the accessory drive belt are most noticeable at idle. Before replacing a belt to resolve a noise condition, inspect all of the accessory drive pulleys for alignment, glazing, or excessive end play.

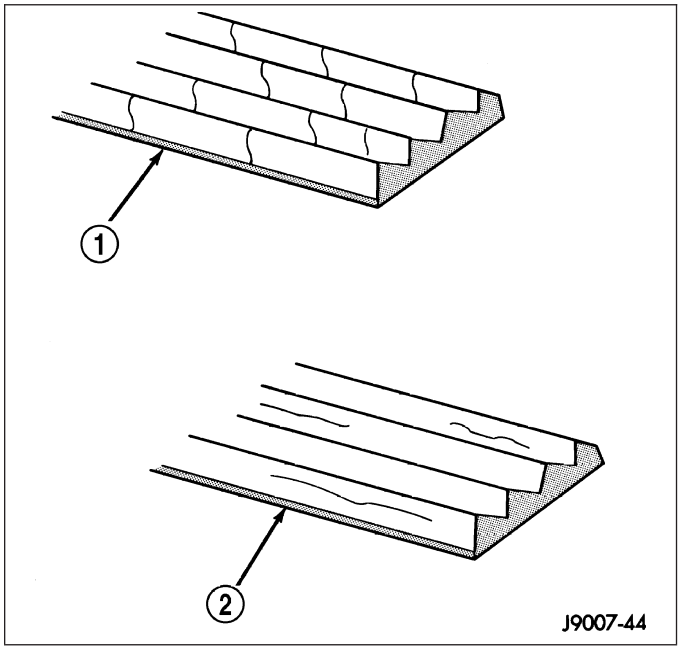

ACCESSORY DRIVE BELT DIAGNOSIS CHART

CONDITION	POSSIBLE CAUSES	CORRECTION
RIB CHUNKING (One or more ribs has separated from belt body)	1. Foreign objects imbedded in pulley grooves.	1. Remove foreign objects from pulley grooves. Replace belt.
	2. Installation damage	2. Replace belt
RIB OR BELT WEAR	1. Pulley misaligned	1. Align pulley(s)
	2. Abrasive environment	2. Clean pulley(s). Replace belt if necessary
	3. Rusted pulley(s)	3. Clean rust from pulley(s)
	4. Sharp or jagged pulley groove tips	4. Replace pulley. Inspect belt.
	5. Belt rubber deteriorated	5. Replace belt

CONDITION	POSSIBLE CAUSES	CORRECTION
BELT SLIPS	1. Belt slipping because of insufficient tension	1. Inspect/Replace tensioner if necessary
	2. Belt or pulley exposed to substance that has reduced friction (belt dressing, oil, ethylene glycol)	2. Replace belt and clean pulleys
	3. Driven component bearing failure (seizure)	3. Replace faulty component or bearing
	4. Belt glazed or hardened from heat and excessive slippage	4. Replace belt.
LONGITUDAL BELT CRACKING	1. Belt has mistracked from pulley groove	1. Replace belt
	2. Pulley groove tip has worn away rubber to tensile member	2. Replace belt
″GROOVE JUMPING″ (Belt does not maintain correct position on pulley)	1. Incorrect belt tension	1. Inspect/Replace tensioner if necessary
	2. Pulley(s) not within design tolerance	2. Replace pulley(s)
	3. Foreign object(s) in grooves	3. Remove foreign objects from grooves
	4. Pulley misalignment	4. Align component
	5. Belt cordline is broken	5. Replace belt
BELT BROKEN (Note: Identify and correct problem before new belt is installed)	1. Incorrect belt tension	1. Replace Inspect/Replace tensioner if necessary
	2. Tensile member damaged during belt installation	2. Replace belt
	3. Severe misalignment	3. Align pulley(s)
	4. Bracket, pulley, or bearing failure	4. Replace defective component and belt
NOISE (Objectionable squeal, squeak, or rumble is heard or felt while drive belt is in operation)	1. Incorrect belt tension	1. Inspect/Replace tensioner if necessary
	2. Bearing noise	2. Locate and repair
	3. Belt misalignment	3. Align belt/pulley(s)
	4. Belt to pulley mismatch	4. Install correct belt
	5. Driven component induced vibration	5. Locate defective driven component and repair
TENSION SHEETING FABRIC FAILURE (Woven fabric on outside, circumference of belt has cracked or separated from body of belt)	1. Tension sheeting contacting stationary object	1. Correct rubbing condition
	2. Excessive heat causing woven fabric to age	2. Replace belt
	3. Tension sheeting splice has fractured	3. Replace belt

CONDITION	POSSIBLE CAUSES	CORRECTION
CORD EDGE FAILURE (Tensile member exposed at edges of belt or separated from belt body)	1. Incorrect belt tension	1. Inspect/Replace tensioner if necessary
	2. Belt contacting stationary object	2. Replace belt
	3. Pulley(s) out of tolerance	3. Replace pulley
	4. Insufficient adhesion between tensile member and rubber matrix	4. Replace belt

REMOVAL

3.7L/4.7L ENGINE

The 3.7/4.7L engine accessory drive system consists of :

- Generator Pulley (1)
- Accessory drive belt (2)
- Power Steering Pump Pulley (3)
- Crankshaft Pulley (4)
- Idler Pulley (5)
- Tensioner (6)
- A/C Compressor Pulley (7)
- Water Pump Pulley (8)

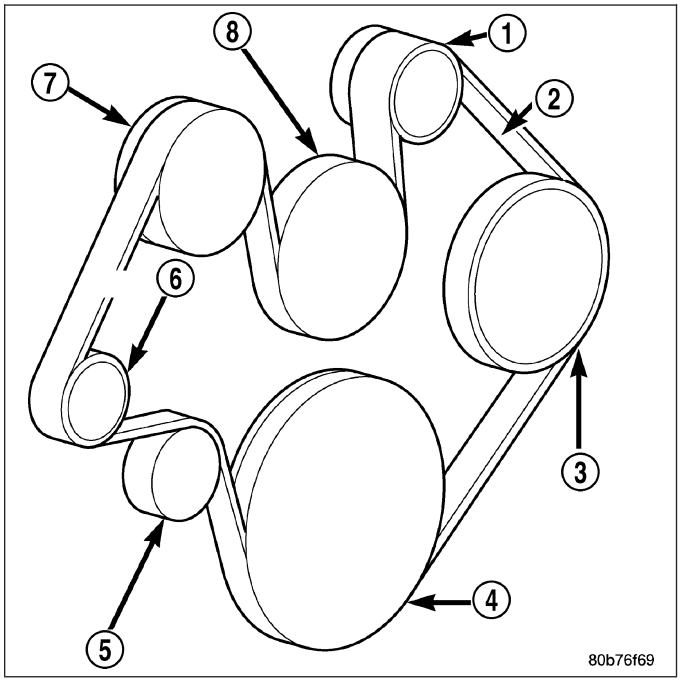

CAUTION: DO NOT LET TENSIONER ARM SNAP BACK TO THE FREEARM POSITION, SEVER DAMAGE MAY OCCUR TO THE TENSIONER.

Belt tension is not adjustable. Belt adjustment is maintained by an automatic (spring load) belt tensioner.

1. Disconnect negative battery cable from battery.
2. Rotate belt tensioner until it contacts it's stop. Remove belt, then slowly rotate the tensioner into the freearm position..

5.7L ENGINE

The 5.7L engine accessory drive system consists of :

- Generator (1)
- Idler Pulley (2)
- Power Steering Pump (3)
- A/C Compressor (4)
- Crankshaft (5)
- Belt Tensioner (6)
- Water Pump (7)

1. Remove the air intake tube between intake manifold and air filter assembly..
2. Release the belt tension by rotating the tensioner **counterclockwise** with a 15 mm wrench on the tensioner pulley bolt. Rotate belt tensioner until belt can be removed from pulleys.
3. Remove belt.
4. Gently release tensioner.

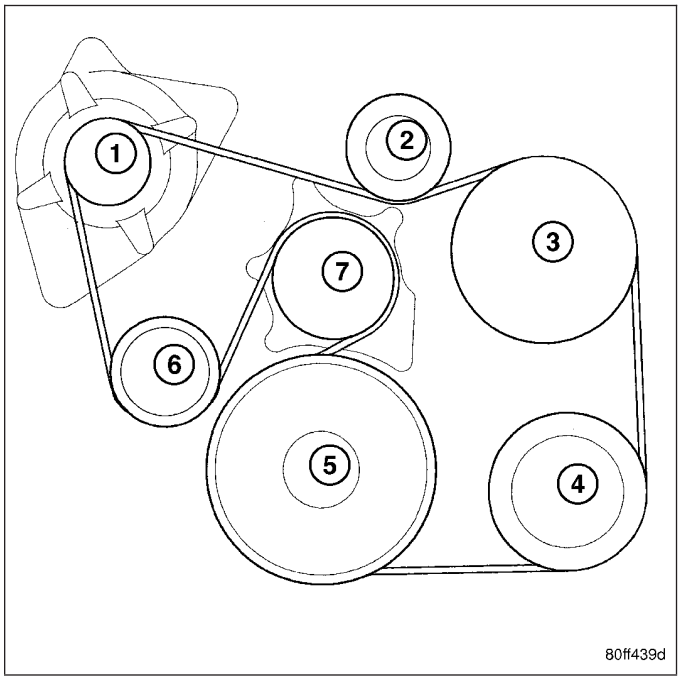

5.9L DIESEL

The 5.9L diesel engine accessory drive system (without a/c) consists of :

- Generator Pulley (1)
- Water Pump Pulley (2)
- Idler Pulley (3)
- Power Steering Pump Pulley (4)
- Radiator Fan Pulley (5)
- Crankshaft Pulley (6)
- Automatic Tensioner (7)

CAUTION: Do not attempt to check belt tension with a belt tension gauge on vehicles equipped with an automatic belt tensioner. Refer to Automatic Belt Tensioner in this group.

NOTE: The belt routing schematics are published from the latest information available at the time of publication. If anything differs between these schematics and the Belt Routing Label, use the schematics on Belt Routing Label.This label is located in the engine compartment.

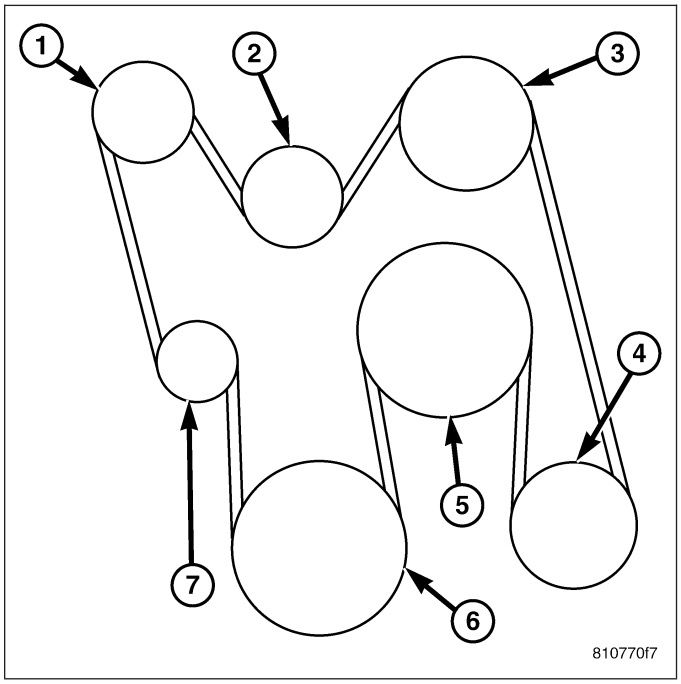

Drive belts on diesel engines are equipped with a spring loaded automatic belt tensioner.

This belt tensioner will be used on all belt configurations, such as with or without air conditioning. For more information, (Refer to 7 - COOLING/ACCESSORY DRIVE/BELT TENSIONERS - DESCRIPTION).

The 5.9L diesel engine accessory drive system (with a/c) consists of :

- Generator Pulley (1)
- Water Pump Pulley (2)
- Idler Pulley (3)
- Power Steering Pump Pulley (4)
- Radiator Fan Pulley (5)
- Crankshaft Pulley (6)
- Automatic Tensioner (7)
- A/C Compressor Pump Pulley (8)

1. A 1/2 inch square hole is provided in the automatic belt tensioner. Attach a 1/2 inch drive-long handle ratchet to this hole.
2. Rotate ratchet and tensioner assembly clockwise (as viewed from front) until tension has been relieved from belt.
3. Remove belt from water pump pulley first.
4. Remove belt from vehicle.

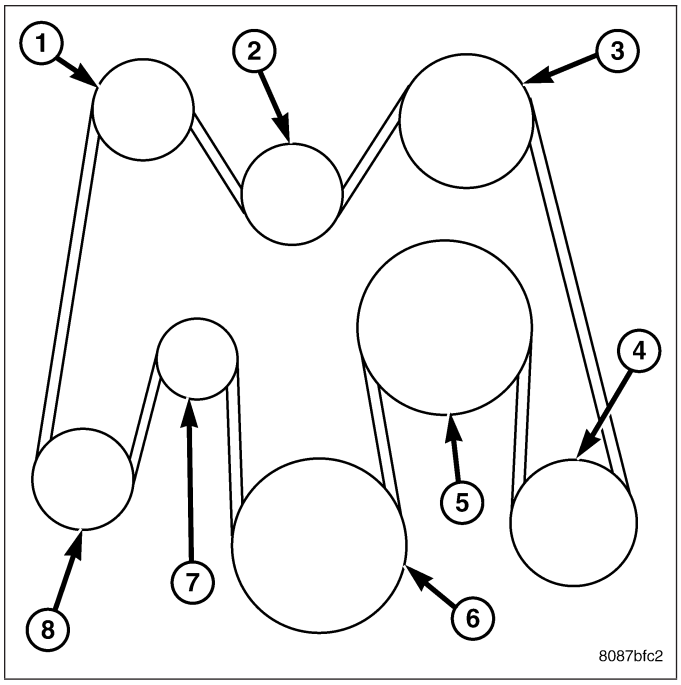

8.3L ENGINE

The 8.3L engine accessory drive system consists of :

- Generator (1)
- Idler Pulley (2)
- Power Steering Pump (3)
- A/C Compressor (4)
- Crankshaft (5)
- Belt Tensioner (6)
- Water Pump (7)

1. Remove the air intake tube between intake manifold and air filter assembly (Refer to 9 - ENGINE/ AIR INTAKE SYSTEM/AIR CLEANER HOUSING - REMOVAL).
2. Release the belt tension by rotating the tensioner **counterclockwise** with a 15 mm wrench on the tensioner pulley bolt. Rotate belt tensioner until belt can be removed from pulleys.
3. Remove accessory drive belt.
4. Gently release tensioner.

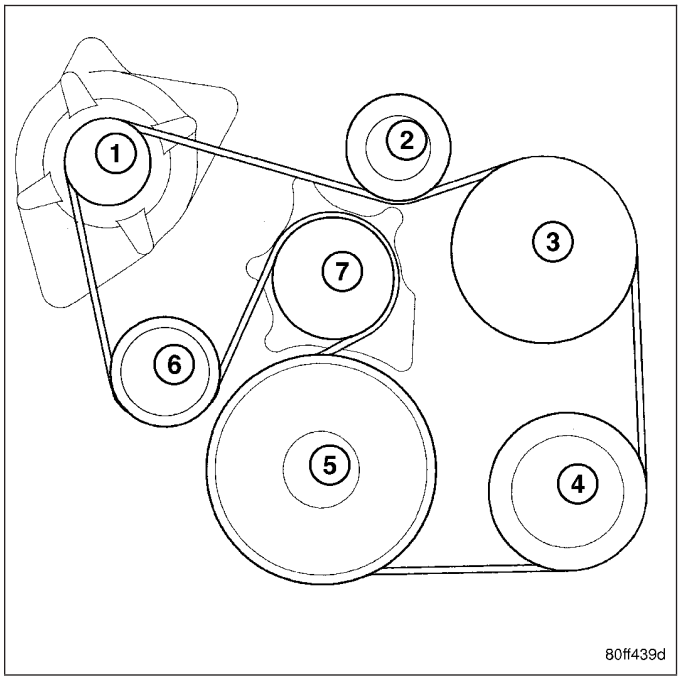

INSTALLATION

3.7L/4.7L ENGINE

The 3.7/4.7L engine accessory drive system consists of :

- Generator Pulley (1)
- Accessory drive belt (2)
- Power Steering Pump Pulley (3)
- Crankshaft Pulley (4)
- Idler Pulley (5)
- Tensioner (6)
- A/C Compressor Pulley (7)
- Water Pump Pulley (8)

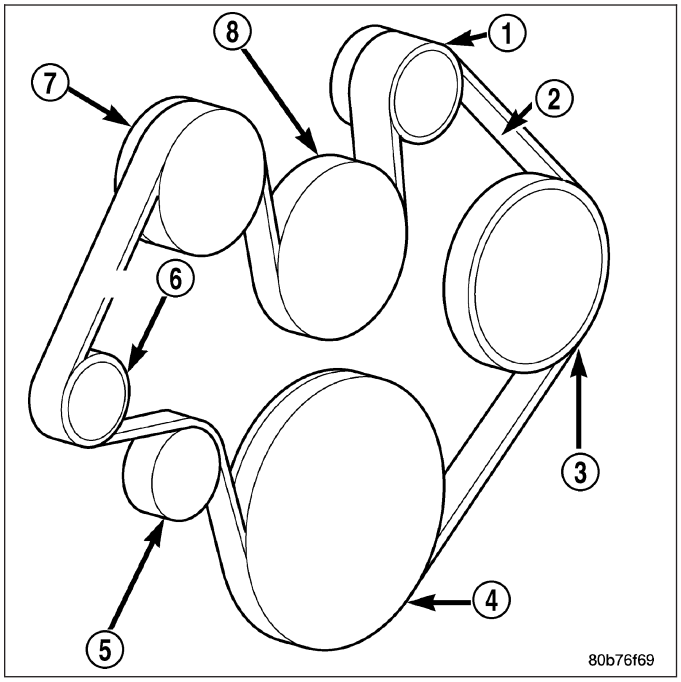

Belt tension is not adjustable. Belt adjustment is maintained by an automatic (spring load) belt tensioner.

1. Check condition of all pulleys.

CAUTION: When installing the serpentine accessory drive belt, the belt MUST be routed correctly. If not, the engine may overheat due to the water pump rotating in the wrong direction.

2. Install new belt. Route the belt around all pulleys except the idler pulley. Rotate the tensioner arm until it contacts it's stop position. Route the belt around the idler and slowly let the tensioner rotate into the belt. Make sure the belt is seated onto all pulleys.
3. With the drive belt installed, inspect the belt wear indicator. On 4.7L Engines only, the gap between the tang and the housing stop (measurement A) must not exceed 24 mm (.94 inches). If the measurement exceeds this specification replace the serpentine accessory drive belt.

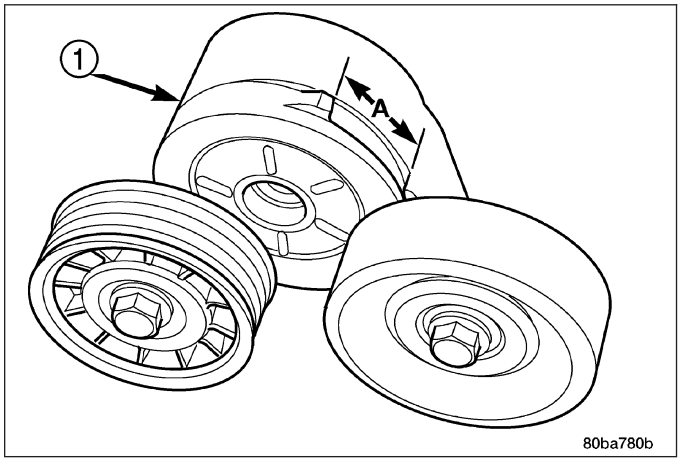

5.7L ENGINE

The 5.7L engine accessory drive system consists of :

- Generator (1)
- Idler Pulley (2)
- Power Steering Pump (3)
- A/C Compressor (4)
- Crankshaft (5)
- Belt Tensioner (6)
- Water Pump (7)

NOTE: When installing accessory drive belt onto pulleys, make sure that belt is properly routed and all V-grooves make proper contact with pulleys.

1. Position the drive belt over all pulleys except for the water pump pulley.
2. Rotate tensioner **counterclockwise** and slip the belt over the water pump pulley.
3. Gently release tensioner.
4. Install the air intake tube between intake manifold and air filter assembly.

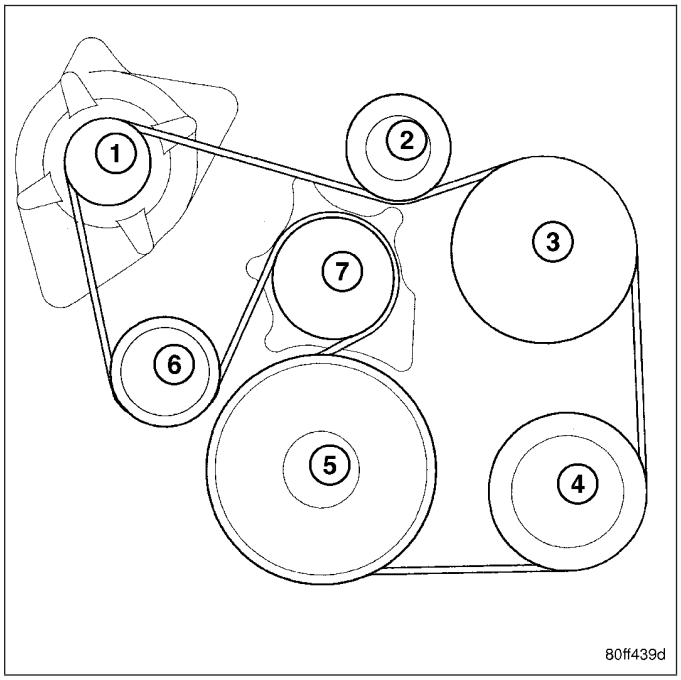

5.9L DIESEL

The 5.9L diesel engine accessory drive system (with a/c) consists of :

- Generator Pulley (1)
- Water Pump Pulley (2)
- Idler Pulley (3)
- Power Steering Pump Pulley (4)
- Radiator Fan Pulley (5)
- Crankshaft Pulley (6)
- Automatic Tensioner (7)
- A/C Compressor Pump Pulley (8)

CAUTION: When installing the accessory drive belt, the belt must be routed correctly. If not, engine may overheat due to water pump rotating in wrong direction. Refer to or for correct engine belt routing. The correct belt with correct length must be used.

1. Position drive belt over all pulleys **except** water pump pulley.
2. Attach a 1/2 inch ratchet to tensioner.

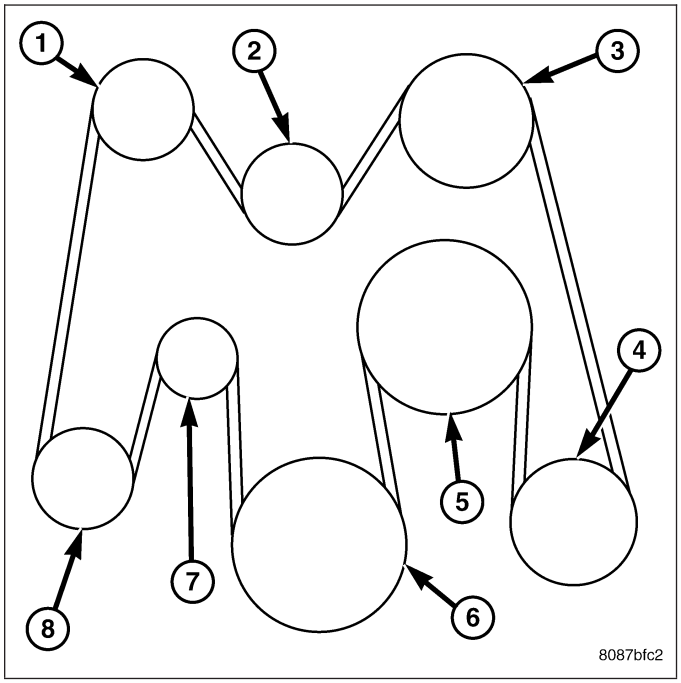

The 5.9L diesel engine accessory drive system (without a/c) consists of :

- Generator Pulley (1)
- Water Pump Pulley (2)
- Idler Pulley (3)
- Power Steering Pump Pulley (4)
- Radiator Fan Pulley (5)
- Crankshaft Pulley (6)
- Automatic Tensioner (7)

3. Rotate ratchet and belt tensioner clockwise. Place belt over water pump pulley. Let tensioner rotate back into place. Remove ratchet. Be sure belt is properly seated on all pulleys.

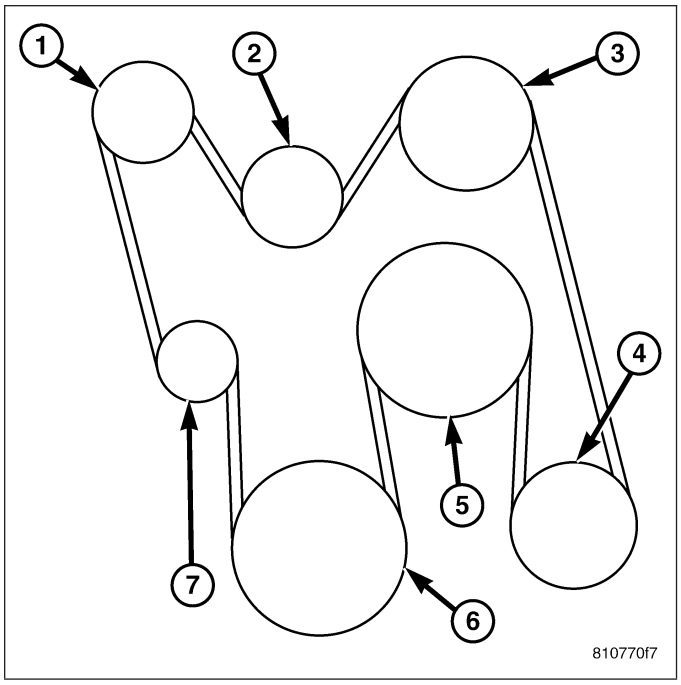

8.3L ENGINE

The 8.3L engine accessory drive system consists of :

- Generator (1)
- Idler Pulley (2)
- Power Steering Pump (3)
- A/C Compressor (4)
- Crankshaft (5)
- Belt Tensioner (6)
- Water Pump (7)

NOTE: When installing accessory drive belt onto pulleys, make sure that belt is properly routed and all V-grooves make proper contact with pulleys.

1. Position the drive belt over all pulleys except for the water pump pulley.
2. Rotate tensioner **counterclockwise** and slip the belt over the water pump pulley.
3. Gently release tensioner.
4. Install the air intake tube between intake manifold and air filter assembly (Refer to 9 - ENGINE/AIR INTAKE SYSTEM/AIR CLEANER HOUSING - INSTALLATION).

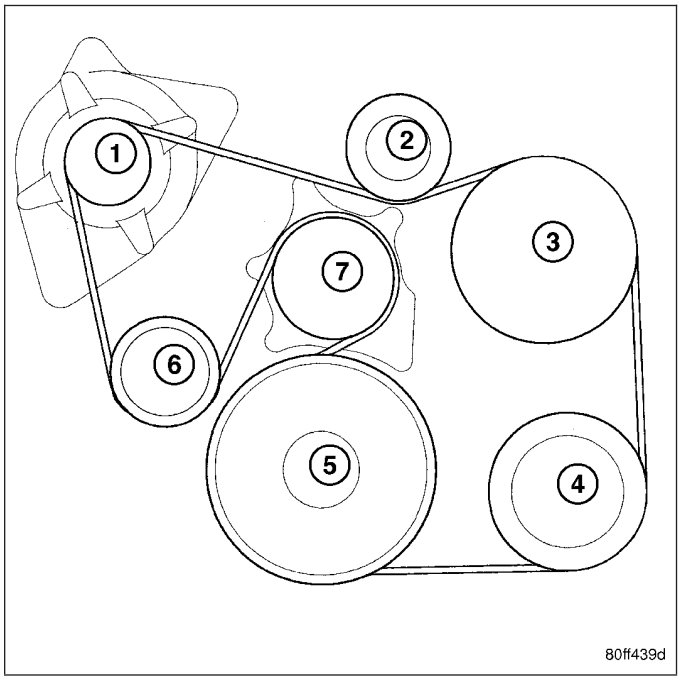

ENGINE

TABLE OF CONTENTS

page

COOLANT
DESCRIPTION
ENGINE COOLANT 41
HOAT COOLANT 42
OPERATION 43
DIAGNOSIS AND TESTING
COOLANT CONCENTRATION TESTING 43
CONTAINER-COOLANT RECOVERY-GAS ENGINES
DESCRIPTION 44
OPERATION 44
REMOVAL
3.7L/4.7L/5.7L ENGINE 45
5.9L DIESEL ENGINE 45
8.3L ENGINE 46
INSTALLATION
3.7L/4.7L/5.7L ENGINE 46
5.9L DIESEL ENGINE 47
8.3L ENGINE 47
RADIATOR FAN
REMOVAL
3.7L/4.7L/5.7L ENGINE 48
5.9L DIESEL 49
8.3L ENGINE 50
CLEANING 51
INSPECTION 51
INSTALLATION
3.7L/4.7L/5.7L ENGINE 51
5.9L DIESEL 52
8.3L ENGINE 53
HEATER-ENGINE BLOCK
DESCRIPTION 54
OPERATION 55
DIAGNOSIS AND TESTING - ENGINE BLOCK HEATER 55
REMOVAL
REMOVAL 3.7L/4.7L 56
5.9L DIESEL 56
5.7L 57
INSTALLATION
INSTALLATION 3.7L/4.7L 57
5.9L DIESEL 58
5.7L 58
SENSOR-ENGINE COOLANT TEMPERATURE
DESCRIPTION 59
OPERATION 59
REMOVAL
3.7L V-6 60
4.7L V-8 60
5.7L V-8 61
5.9L Diesel 62
8.3L V-10 62
INSTALLATION
3.7L V-6 63
4.7L V-8 63
5.7L V-8 64
5.9L Diesel 64
8.3L V-10 65
THERMOSTAT-ENGINE COOLANT
DESCRIPTION
GAS ENGINE 66
5.9L DIESEL 67
OPERATION
3.7L/4.7L/5.7L ENGINE 67
8.3L ENGINE 67
DIAGNOSIS AND TESTING
THERMOSTAT 67
REMOVAL
3.7L/4.7L ENGINE 69
5.7L ENGINE 69
5.9L DIESEL ENGINE 70
8.3L ENGINE 71
INSTALLATION
3.7L/4.7L ENGINE 71
5.7L ENGINE 72
5.9L DIESEL ENGINE 72
8.3L ENGINE 73
FAN DRIVE VISCOUS
DESCRIPTION
3.7L/4.7L/5.7L ENGINE (BI-METAL COIL TYPE). 74
5.9L DIESEL ENGINE (ELECTRONICALLY CONTROLLED FAN DRIVE). 74
OPERATION
3.7L/4.7L/5.7L ENGINE (BI-METAL COIL TYPE). 75
5.9L DIESEL (ELECTRONICALLY CONTROLLED FAN DRIVE). 75
DIAGNOSIS AND TESTING
VISCOUS FAN DRIVE 75
ELECTRONICALLY CONTROLLED VISCOUS FAN DRIVE - 5.9L DIESEL 77
REMOVAL
3.7L/4.7L/5.7L ENGINE 78
5.9L DIESEL ENGINE 79
INSTALLATION
3.7L/4.7L/5.7L ENGINE 80
5.9L DIESEL ENGINE 80
RADIATOR
DESCRIPTION 82
OPERATION 82

DIAGNOSIS AND TESTING
RADIATOR COOLANT FLOW 82
REMOVAL
3.7L/4.7L/5.7L ENGINE 83
5.9L DIESEL ENGINE 84
8.3L ENGINE 85
CLEANING 85
INSPECTION 85
INSTALLATION
3.7L/4.7L/5.7L ENGINE 86
5.9L DIESEL ENGINE 87
8.3L ENGINE 87
CAP-RADIATOR PRESSURE
DESCRIPTION 89
OPERATION 89
DIAGNOSIS AND TESTING
RADIATOR CAP-TO-FILLER NECK SEAL 89
RADIATOR CAP 90
CLEANING 90
INSPECTION 90
PUMP-WATER
DESCRIPTION
DESCRIPTION 91
DESCRIPTION - WATER PUMP BYPASS 91
OPERATION
OPERATION 92
WATER PUMP BYPASS – 3.7L/4.7L 92
DIAGNOSIS AND TESTING - WATER PUMP 92
REMOVAL
3.7L/4.7L ENGINE 92
5.7L ENGINE 93
5.9L DIESEL ENGINE 94
8.3L ENGINE 94
CLEANING 95
INSPECTION 95
INSTALLATION
3.7L/4.7L ENGINE 96
5.7L ENGINE 97
5.9L DIESEL ENGINE 97
8.3L ENGINE 98

COOLANT

DESCRIPTION

ENGINE COOLANT

WARNING: ANTIFREEZE IS AN ETHYLENE GLYCOL BASE COOLANT AND IS HARMFUL IF SWALLOWED OR INHALED. IF SWALLOWED, DRINK TWO GLASSES OF WATER AND INDUCE VOMITING. IF INHALED, MOVE TO FRESH AIR AREA. SEEK MEDICAL ATTENTION IMMEDIATELY. DO NOT STORE IN OPEN OR UNMARKED CONTAINERS. WASH SKIN AND CLOTHING THOROUGHLY AFTER COMING IN CONTACT WITH ETHYLENE GLYCOL. KEEP OUT OF REACH OF CHILDREN. DISPOSE OF GLYCOL BASE COOLANT PROPERLY, CONTACT YOUR DEALER OR GOVERNMENT AGENCY FOR LOCATION OF COLLECTION CENTER IN YOUR AREA. DO NOT OPEN A COOLING SYSTEM WHEN THE ENGINE IS AT OPERATING TEMPERATURE OR HOT UNDER PRESSURE, PERSONAL INJURY CAN RESULT. AVOID RADIATOR COOLING FAN WHEN ENGINE COMPARTMENT RELATED SERVICE IS PERFORMED, PERSONAL INJURY CAN RESULT.

ETHYLENE-GLYCOL MIXTURES

CAUTION: Richer antifreeze mixtures cannot be measured with normal field equipment and can cause problems associated with 100 percent ethylene-glycol.

The use of aluminum cylinder blocks, cylinder heads and water pumps requires special corrosion protection. Only Mopar® Antifreeze/Coolant, 5 year/100,000 Mile Formula (ethylene-glycol base coolant with corrosion inhibitors called HOAT, for Hybrid Additive Technology) is recommended. This coolant offers the best engine cooling without corrosion when mixed with 50% distilled water to obtain a freeze point of -37°C (-35°F).

The required ethylene-glycol (antifreeze) and water mixture depends upon the climate and vehicle operating conditions. The antifreeze concentration **must always** be a minimum of 44 percent, year-round in all climates. **If percentage is lower than 44 percent, engine parts may be eroded by cavitation, and cooling system components may be severely damaged by corrosion.** Maximum protection against freezing is provided with a 68% antifreeze concentration, which prevents freezing down to -67.7° C (-90° F). A higher percentage will freeze at a warmer temperature. Also, a higher percentage of antifreeze can cause the engine to overheat because the specific heat of antifreeze is lower than that of water.

Use of 100 percent ethylene-glycol will cause formation of additive deposits in the system, as the corrosion inhibitive additives in ethylene-glycol require the presence of water to dissolve. The deposits act as insulation, causing temperatures to rise to as high as 149°C (300°F). This temperature is hot enough to melt plastic and soften solder. The increased temperature can result in engine detonation. In addition, 100 percent ethylene-glycol freezes at 22°C (-8°F).

PROPYLENE-GLYCOL MIXTURES

It's overall effective temperature range is smaller than that of ethylene-glycol. The freeze point of 50/50 propylene-glycol and water is -32°C (-26°F). 5°C higher than ethylene-glycol's freeze point. The boiling point (protection against summer boil-over) of propylene-glycol is 125°C (257°F) at 96.5 kPa (14 psi), compared to 128°C (263°F) for ethylene-glycol. Use of propylene-glycol can result in boil-over or freeze-up on a cooling system designed for ethylene-glycol. Propylene glycol also has poorer heat transfer characteristics than ethylene glycol. This can increase cylinder head temperatures under certain conditions.

Propylene-glycol/ethylene-glycol Mixtures can cause the destabilization of various corrosion inhibitors, causing damage to the various cooling system components. Also, once ethylene-glycol and propylene-glycol based coolants are mixed in the vehicle, conventional methods of determining freeze point will not be accurate. Both the refractive index and specific gravity differ between ethylene glycol and propylene glycol.

HOAT COOLANT

WARNING: ANTIFREEZE IS AN ETHYLENE-GLYCOL BASE COOLANT AND IS HARMFUL IF SWALLOWED OR INHALED. IF SWALLOWED, DRINK TWO GLASSES OF WATER AND INDUCE VOMITING. IF INHALED, MOVE TO FRESH AIR AREA. SEEK MEDICAL ATTENTION IMMEDIATELY. DO NOT STORE IN OPEN OR UNMARKED CONTAINERS. WASH SKIN AND CLOTHING THOROUGHLY AFTER COMING IN CONTACT WITH ETHYLENE-GLYCOL. KEEP OUT OF REACH OF CHILDREN. DISPOSE OF GLYCOL BASE COOLANT PROPERLY, CONTACT YOUR DEALER OR GOVERNMENT AGENCY FOR LOCATION OF COLLECTION CENTER IN YOUR AREA. DO NOT OPEN A COOLING SYSTEM WHEN THE ENGINE IS AT OPERATING TEMPERATURE OR HOT UNDER PRESSURE, PERSONAL INJURY CAN RESULT. AVOID RADIATOR COOLING FAN WHEN ENGINE COMPARTMENT RELATED SERVICE IS PERFORMED, PERSONAL INJURY CAN RESULT.

CAUTION: Use of Propylene-Glycol based coolants is not recommended, as they provide less freeze protection and less corrosion protection.

The cooling system is designed around the coolant. The coolant must accept heat from engine metal, in the cylinder head area near the exhaust valves and engine block. Then coolant carries the heat to the radiator where the tube/fin radiator can transfer the heat to the air.

The use of aluminum cylinder blocks, cylinder heads, and water pumps requires special corrosion protection. Mopar® Antifreeze/Coolant, 5 Year/100,000 Mile Formula (MS-9769), or the equivalent ethylene-glycol base coolant with organic corrosion inhibitors (called HOAT, for Hybrid Organic Additive Technology) is recommended. This coolant offers the best engine cooling without corrosion when mixed with 50% ethylene-glycol and 50% distilled water to obtain a freeze point of -37°C (-35°F). If it loses color or becomes contaminated, drain, flush, and replace with fresh properly mixed coolant solution.

CAUTION: Mopar® Antifreeze/Coolant, 5 Year/100,000 Mile Formula (MS-9769) may not be mixed with any other type of antifreeze. Mixing of coolants other than specified (non-HOAT or other HOAT), may result in engine damage that may not be covered under the new vehicle warranty, and decreased corrosion protection.

COOLANT PERFORMANCE

The required ethylene-glycol (antifreeze) and water mixture depends upon climate and vehicle operating conditions. The coolant performance of various mixtures follows:

Pure Water- Water can absorb more heat than a mixture of water and ethylene-glycol. This is for purpose of heat transfer only. Water also freezes at a higher temperature and allows corrosion.

100 percent Ethylene-Glycol - The corrosion inhibiting additives in ethylene-glycol need the presence of water to dissolve. Without water, additives form deposits in system. These act as insulation causing temperature to rise to as high as 149°C (300°F). This temperature is hot enough to melt plastic and soften solder. The increased temperature can result in engine detonation. In addition, 100 percent ethylene-glycol freezes at -22°C (-8°F).

50/50 Ethylene-Glycol and Water - Is the recommended mixture, it provides protection against freezing to -37°C (-34°F). The antifreeze concentration **must always** be a minimum of 44 percent, year-round in all climates. If percentage is lower, engine parts may be eroded by cavitation. Maximum protection against freezing is provided with a 68 percent antifreeze concentration, which prevents freezing down to -67.7°C (-90°F). A higher percentage will freeze at a warmer temperature. Also, a higher percentage of antifreeze can cause the engine to overheat because specific heat of antifreeze is lower than that of water.

CAUTION: Richer antifreeze mixtures cannot be measured with normal field equipment and can cause problems associated with 100 percent ethylene-glycol.

COOLANT SELECTION AND ADDITIVES

The use of aluminum cylinder blocks, cylinder heads and water pumps requires special corrosion protection. Only Mopar® Antifreeze/Coolant, 5 Year/100,000 Mile Formula (glycol base coolant with corrosion inhibitors called HOAT, for Hybrid Organic Additive Technology) is recommended. This coolant offers the best engine cooling without corrosion when mixed with 50% distilled water to obtain to obtain a freeze point of -37°C (-35°F). If it loses color or becomes contaminated, drain, flush, and replace with fresh properly mixed coolant solution.

CAUTION: Do not use coolant additives that are claimed to improve engine cooling.

OPERATION

Coolant flows through the engine block absorbing the heat from the engine, then flows to the radiator where the cooling fins in the radiator transfers the heat from the coolant to the atmosphere. During cold weather the ethylene-glycol or propylene-glycol coolant prevents water present in the cooling system from freezing within temperatures indicated by mixture ratio of coolant to water.

DIAGNOSIS AND TESTING

COOLANT CONCENTRATION TESTING

Coolant concentration should be checked when any additional coolant was added to system or after a coolant drain, flush and refill. The coolant mixture offers optimum engine cooling and protection against corrosion when mixed to a freeze point of -37°C (-34°F) to -46°C (-50°F). The use of a hydrometer or a refractometer can be used to test coolant concentration.

A hydrometer will test the amount of glycol in a mixture by measuring the specific gravity of the mixture. The higher the concentration of ethylene glycol, the larger the number of balls that will float, and higher the freeze protection (up to a maximum of 60% by volume glycol).

A refractometer Tool 8286 (Refer to 7 - COOLING - SPECIAL TOOLS) will test the amount of glycol in a coolant mixture by measuring the amount a beam of light bends as it passes through the fluid.

Some coolant manufactures use other types of glycols into their coolant formulations. Propylene glycol is the most common new coolant. However, propylene glycol based coolants do not provide the same freezing protection and corrosion protection and is not recommended.

CAUTION: Do not mix types of coolant - corrosion protection will be severely reduced.

CONTAINER-COOLANT RECOVERY-GAS ENGINES

DESCRIPTION

The coolant reserve/overflow tank is mounted on top of the fan shroud, and is made of high temperature plastic.

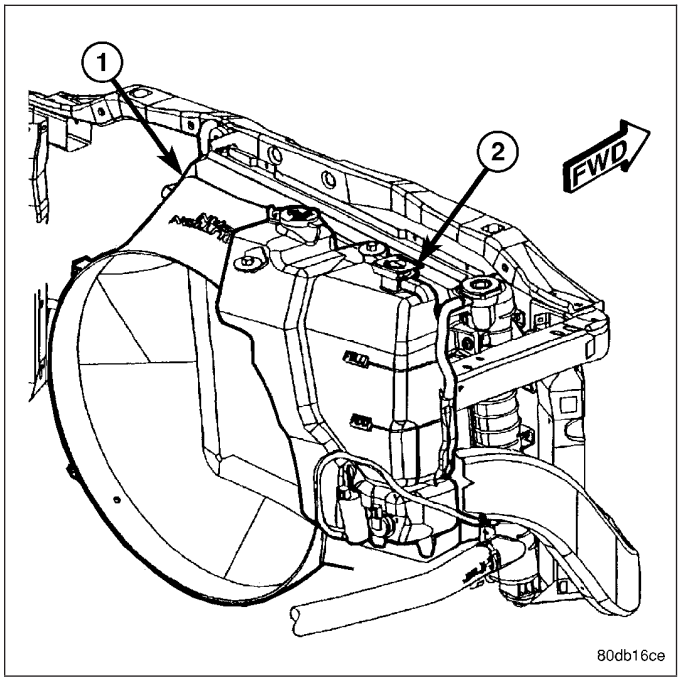

OPERATION

The coolant reserve/overflow system works in conjunction with the radiator pressure cap. It utilizes thermal expansion and contraction of coolant to keep coolant free of trapped air. It provides a volume for expansion and contraction of coolant. It also provides a convenient and safe method for checking coolant level and adjusting level at atmospheric pressure. This is done without removing the radiator pressure cap. The system also provides some reserve coolant to the radiator to cover minor leaks and evaporation or boiling losses.

As the engine cools, a vacuum is formed in the cooling system of both the radiator and engine. Coolant will then be drawn from the coolant tank and returned to a proper level in the radiator.

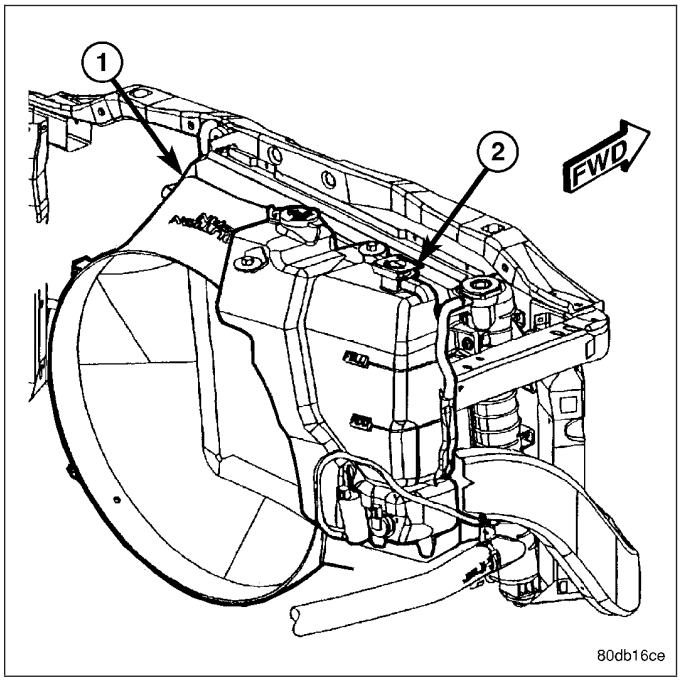

REMOVAL

3.7L/4.7L/5.7L ENGINE

1. Disconnect washer pump electrical connector.
2. Remove recovery hose (3) from radiator (4).
3. Remove the coolant container to fan shroud mounting bolts (1).
4. Tilt the container (2) backward towards the engine to disengage the mounting pin locking features and lift the container away from the fan shroud (5).

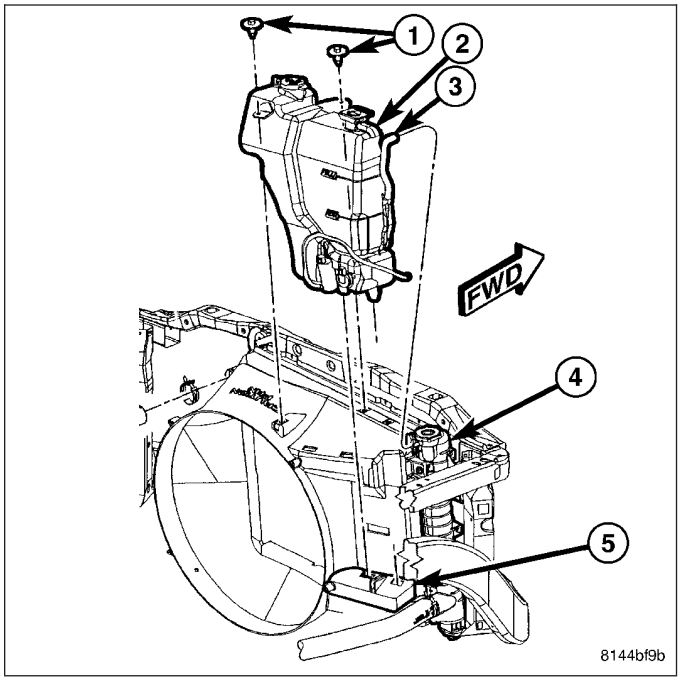

5.9L DIESEL ENGINE

1. Remove overflow hose (5) from radiator (1)
2. Remove mounting bolts (4).
3. Remove coolant recovery bottle (2) from bracket (3).

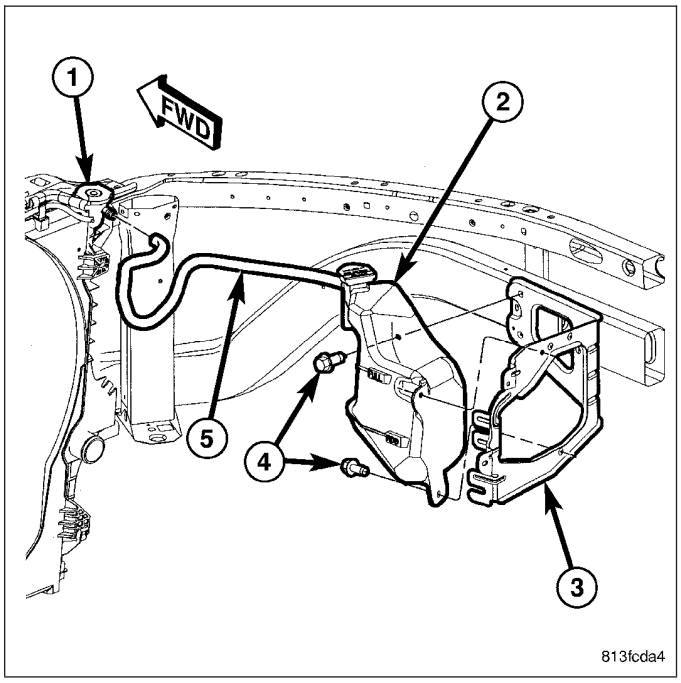

8.3L ENGINE

1. Remove coolant recovery tube from radiator filler neck.
2. Remove coolant recovery container mounting bolt.
3. Remove coolant recover container.

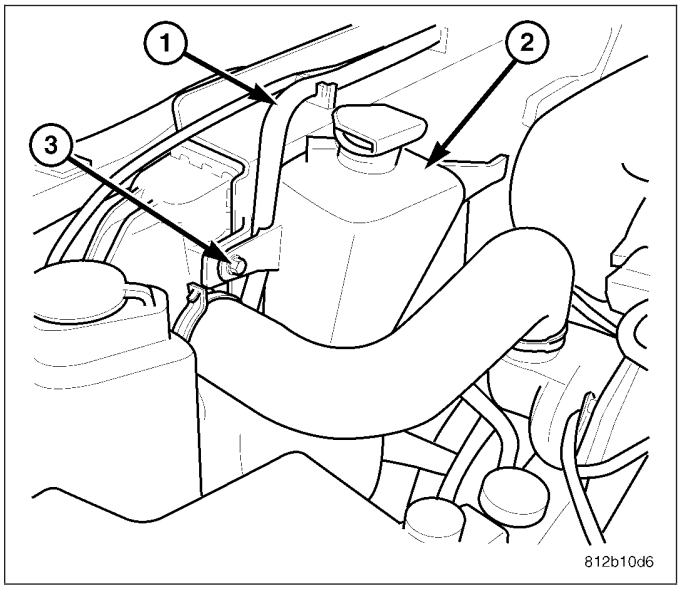

INSTALLATION

3.7L/4.7L/5.7L ENGINE

1. Align the coolant container mounting pins into the slots on the fan shroud (5) and push the container onto the fan shroud.
2. Secure the container to the fan shroud with the bolts (1). Tighten to 8.5 N·m (75 in. lbs).

NOTE: Ensure that the locking feature on the mounting pins has engaged.

3. Connect the recovery hose (3) to the radiator (4).
4. Connect washer pump electrical connector.

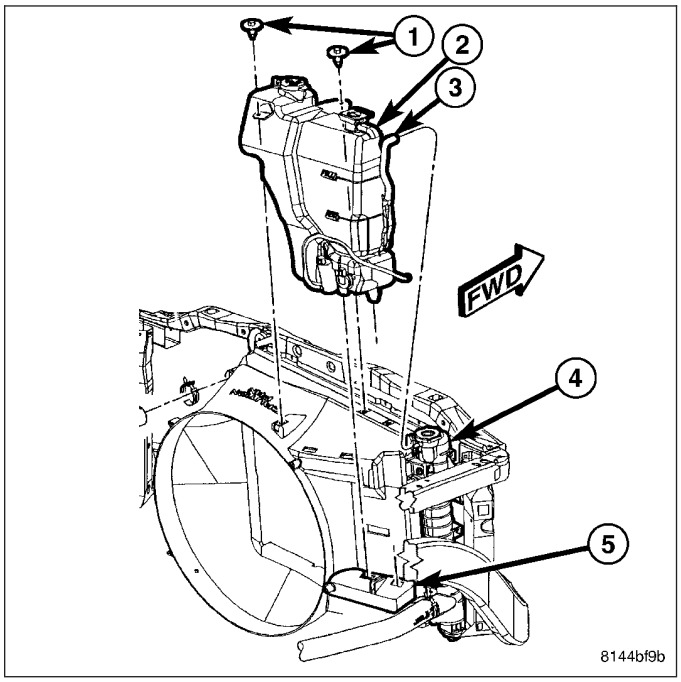

5.9L DIESEL ENGINE

1. Position coolant recovery bottle (2) on bracket (3).
2. Install mounting bolts (4). Tighten to 8.5 N·m (75 in. lbs).
3. Install overflow hose (5) onto radiator (1).

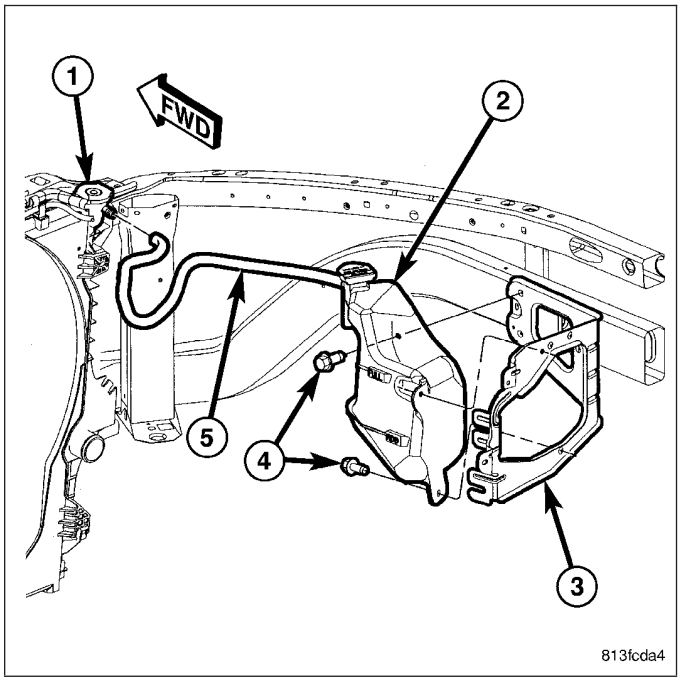

8.3L ENGINE

1. Position coolant recover bottle.
2. Install mounting bolt. Tighten bolt to 10 N·m (89 in. lbs.)
3. Route and connect coolant recovery tube to radiator filler neck.
4. Check coolanrt level (Refer to 7 - COOLING - STANDARD PROCEDURE).

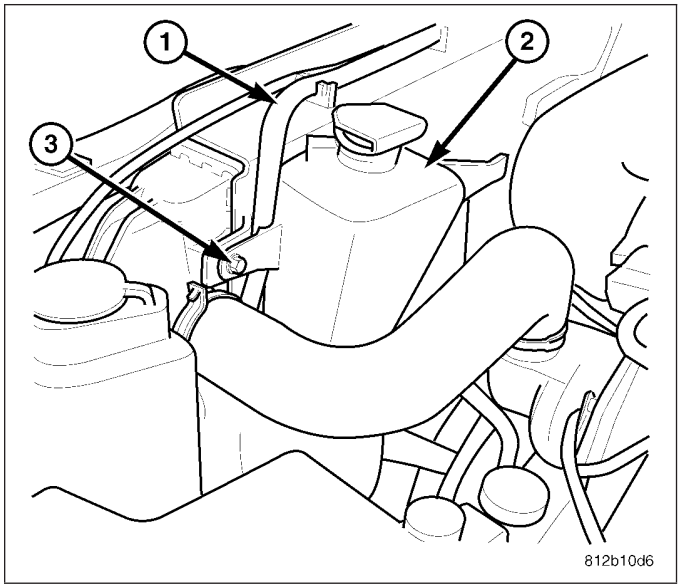

RADIATOR FAN

REMOVAL

3.7L/4.7L/5.7L ENGINE

1. **Do Not** attempt to remove the fan/viscous fan drive assembly from the vehicle at this time.

CAUTION: If the viscous fan drive is replaced because of mechanical damage, the cooling fan blades should also be inspected. Inspect for fatigue cracks, loose blades, or loose rivets that could have resulted from excessive vibration. Replace fan blade assembly if any of these conditions are found. Also inspect water pump bearing and shaft assembly for any related damage due to a viscous fan drive malfunction.

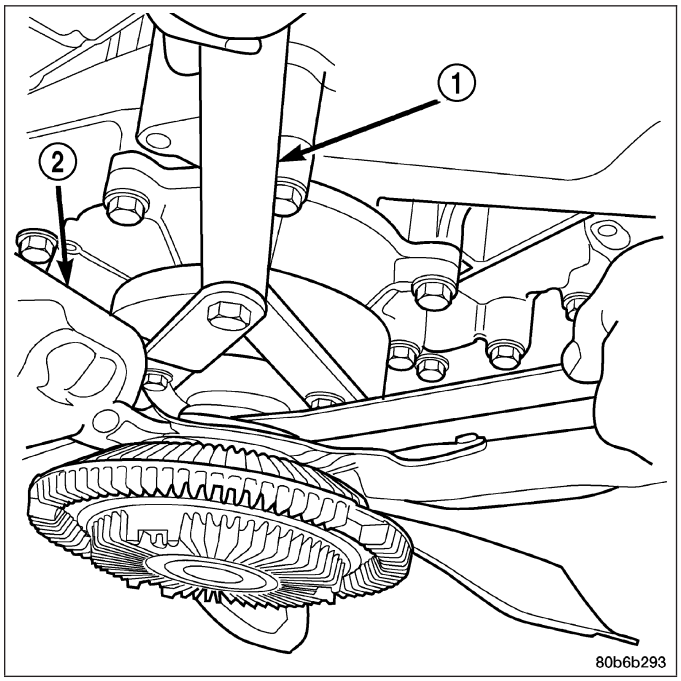

2. Disconnect negative battery cable from battery.
3. Remove coolant reserve/overflow container from fan shroud and lay aside. **Do Not** disconnect the hoses or drain coolant from the container.
4. The thermal viscous fan drive/fan blade assembly is attached (threaded) to the water pump hub shaft. Remove the fan blade/viscous fan drive assembly from the water pump by turning the mounting nut counterclockwise as viewed from the front. Threads on the viscous fan drive are **RIGHT-HAND.** A 36 MM Fan Wrench should be used to prevent pulley from rotating .
5. **Do Not** unbolt the fan blade assembly from viscous fan drive at this time.
6. Remove the fan shroud-to-radiator mounting bolts.
7. Pull the lower shroud mounts out of the radiator tank clips.
8. Remove the fan shroud and fan blade/viscous fan drive assembly as a complete unit from vehicle.
9. After removing the fan blade/viscous fan drive assembly, **do not** place the viscous fan drive in a horizontal position. If stored horizontally, silicone fluid in the viscous fan drive could drain into its bearing assembly and contaminate lubricant.

CAUTION: Do not remove water pump pulley-to-water pump bolts. This pulley is under spring tension.

10. Remove four bolts securing fan blade assembly to viscous fan drive.

CAUTION: Some engines equipped with serpentine drive belts have reverse rotating fans and viscous fan drives. They are marked with the word REVERSE to designate their usage. Installation of the wrong fan or viscous fan drive can result in engine overheating.

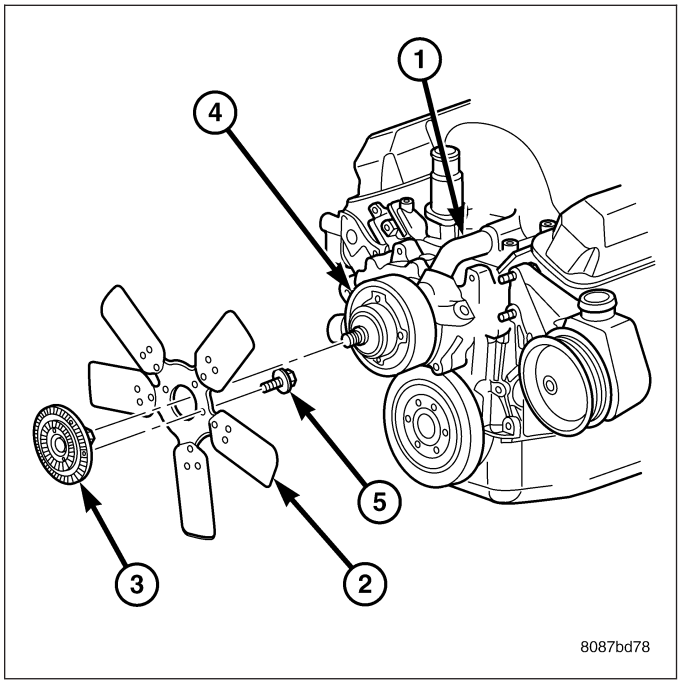

5.9L DIESEL

CAUTION: If the electronically controlled viscous fan drive is replaced because of mechanical damage, the cooling fan blades should also be inspected. Inspect for fatigue cracks, or chipped blades that could have resulted from excessive vibration. Replace fan blade assembly if any of these conditions are found. Also inspect wiring harness and connectors for damage.

1. Disconnect the battery negative cables.
2. Remove fan shroud-to-engine bracket nuts (1).

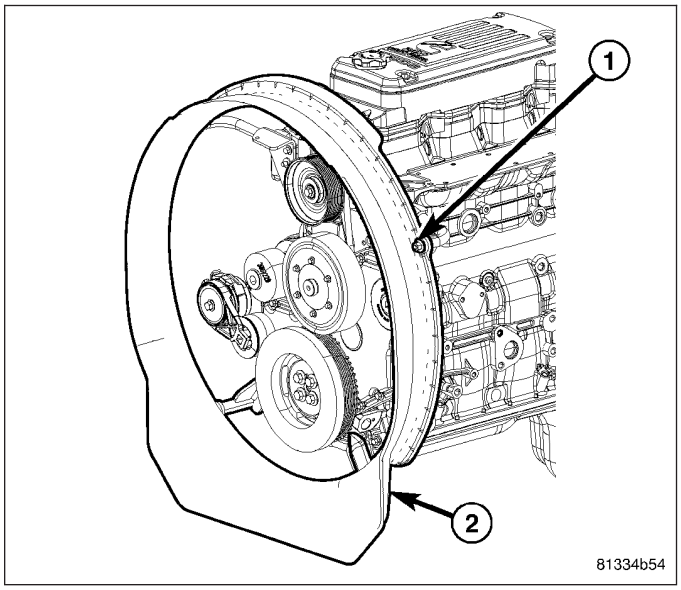

3. Disconnect electronically controlled viscous fan electrical connector (4) at lower fan shroud bracket.
4. Remove wiring bracket -to-lower fan shroud bracket mounting bolt (2).
5. Remove fan drive wire harness support from fan sharoud.

CAUTION: Do not remove the fan pulley bolts. This pulley is under spring tension.

6. The electronically controlled viscous fan drive/fan blade assembly is attached (threaded) to the fan pulley shaft. Remove the fan blade/fan drive assembly from fan pulley by turning the mounting nut counterclockwise (as viewed from front). Threads on the viscous fan drive are **RIGHT-HAND.** A 36 MM Fan Wrench can be used. Place a bar or screwdriver between the fan pulley bolts to prevent pulley from rotating.

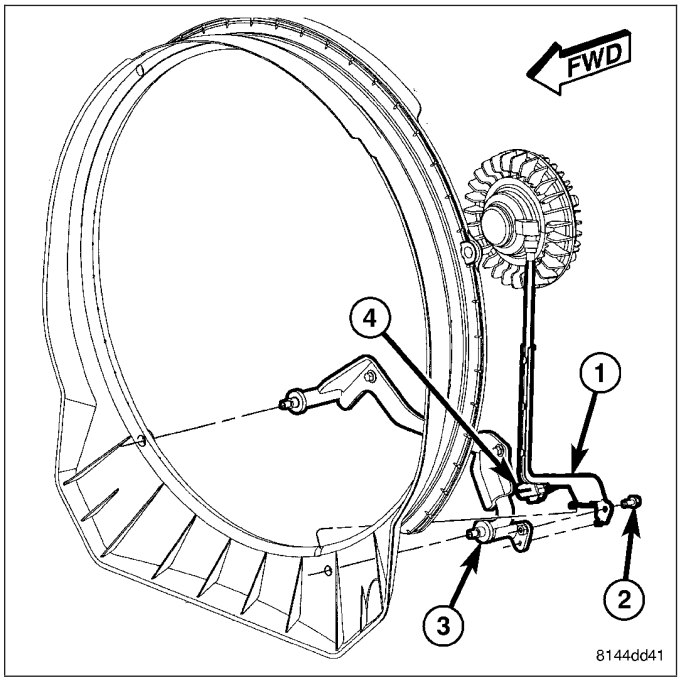

NOTE: It may be necessary to loosen the top two fan shroud brackets. Removal of the engine mounted fan shroud brackets is not necessary unless removing or installing the engine.

7. Collapse fan shroud toward front of vehicle and remove fan drive/fan blade and fan shroud as an assembly.

CAUTION: The electronically controlled viscous fan drive is vibration and impact sensitive, especially at the electrical connectors. Do not drop the unit.

8. Remove the six fan blade-to-viscous fan drive mounting bolts.
9. Inspect the fan for cracked, chipped or damaged fan blades.

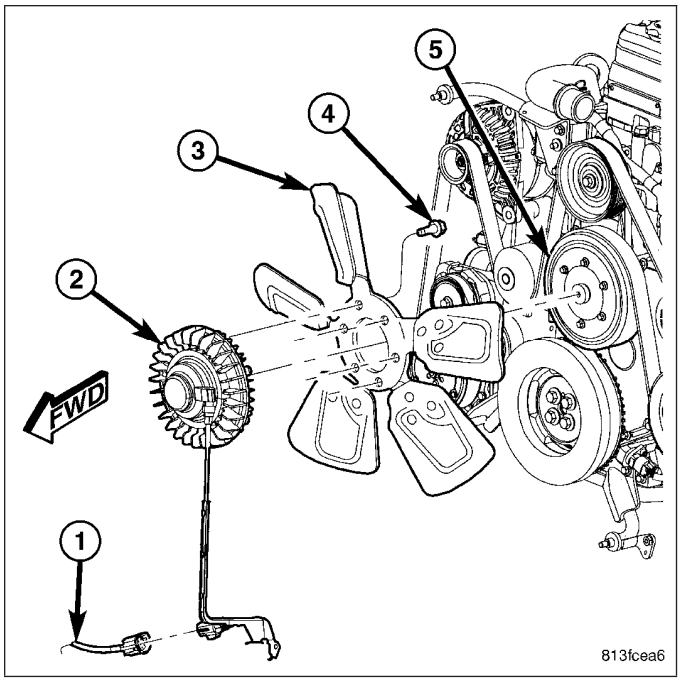

8.3L ENGINE

1. Disconnect the battery negative cables.
2. Drain the cooling system (Refer to 7 - COOLING - STANDARD PROCEDURE).
3. Remove air intake tube between intake manifold and air filter assembly.
4. Unclip A/C lines from radiator fan shroud, and position out of the way
5. Remove coolant recover bottle and coolant container tube.
6. Remove upper radiator hose from radiator and position out of the way.

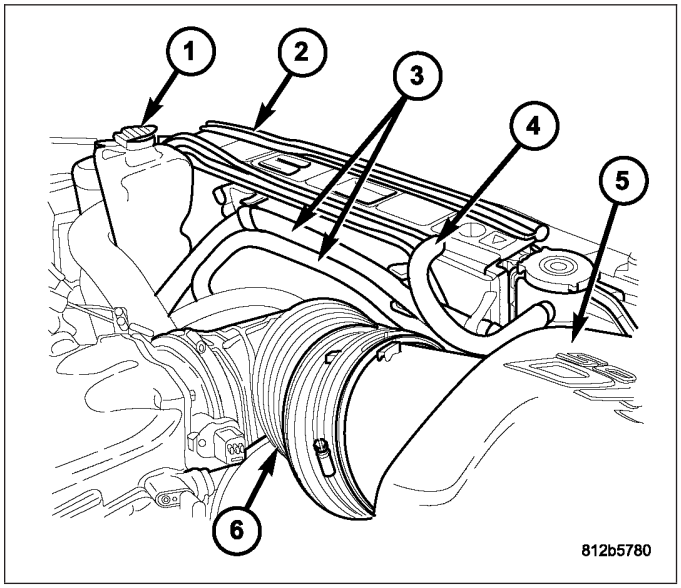

7. Raise vehicle on hoist.
8. Disconnect the high and low pressure hydraulic hoses at the hydraulic fan motor.
9. Disconnect solenoid electrical connector (1).
10. Lower vehicle
11. Remove the four fan shroud retaining bolts.
12. Remove the fan motor and shroud assembly from the vehicle.

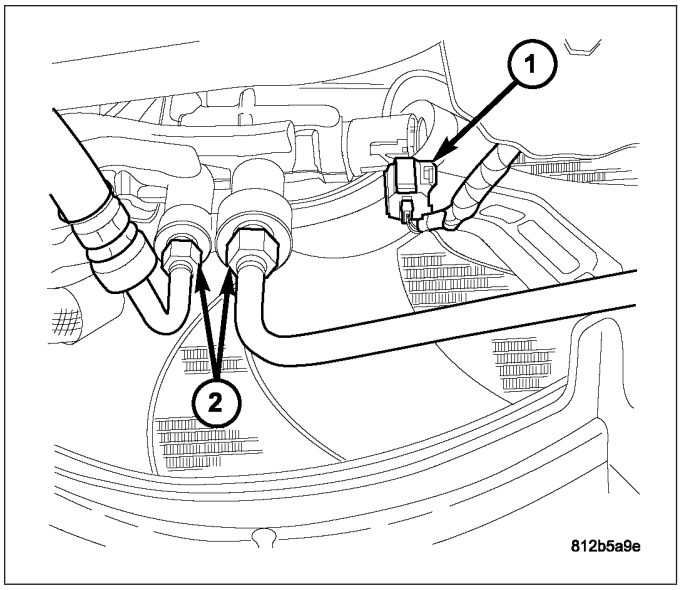

CLEANING

Clean the fan blades using a mild soap and water. Do not use an abrasive to clean the blades.

INSPECTION

WARNING: DO NOT ATTEMPT TO BEND OR STRAIGHTEN FAN BLADES IF FAN IS NOT WITHIN SPECIFICATIONS.

CAUTION: If fan blade assembly is replaced because of mechanical damage, water pump and viscous fan drive should also be inspected. These components could have been damaged due to excessive vibration.

INSTALLATION

3.7L/4.7L/5.7L ENGINE

NOTE: Viscous Fan Drive Fluid Pump Out Requirement: After installing a new viscous fan drive, bring the engine speed up to approximately 2000 rpm and hold for approximately two minutes. This will ensure proper fluid distribution within the drive.

1. Install fan blade assembly to the viscous fan drive. Tighten the bolts to 24 N·m (18 ft. lbs.) torque.
2. Position the fan shroud and the fan blade/viscous fan drive assembly to the vehicle as a complete unit.
3. Install the fan shroud.
4. Install the fan blade/viscous fan drive assembly to the water pump shaft. Tighten mounting nut to 50 N·m (37 ft. lbs.).
5. Install the coolant reserve/overflow container to the fan shroud.
6. Connect the negative battery cable.

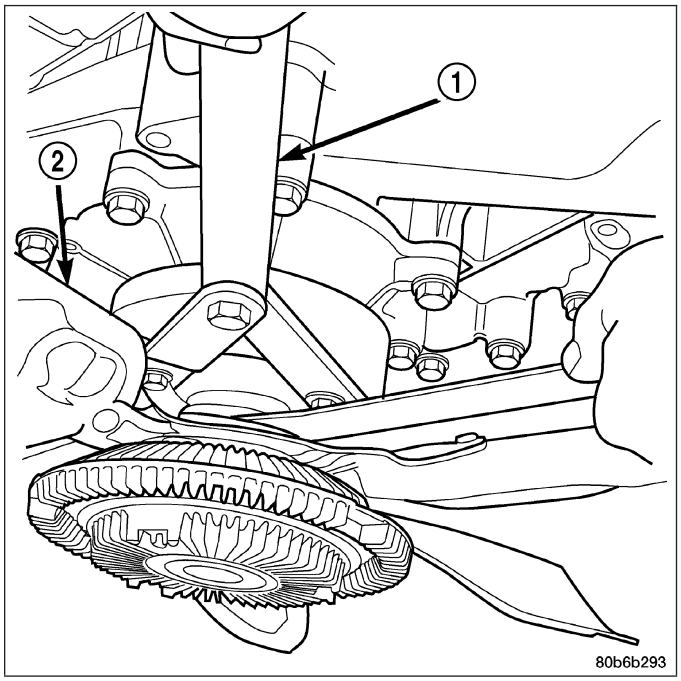

5.9L DIESEL

NOTE: Viscous Fan Drive Fluid Pump Out Requirement: After installing a new viscous fan drive, bring the engine speed up to approximately 2000 rpm and hold for approximately two minutes. This will ensure proper fluid distribution within the drive.

1. Install fan blade assembly to electrically controlled viscous fan drive. Tighten mounting bolts to 24 N·m (18 ft. lbs.) torque.
2. Lossen both upper engine mounted fan shroud brackets.
3. Make sure lower engine mounted fan shroud bracket bolts are tightened to 24 N·m (18 ft. lbs.).
4. Position fan/fan drive assembly inside fan shroud and lower into position.
5. Install the viscous fan drive assembly onto fan pulley hub shaft. Tighten mounting nut to 115 N·m (85 ft. lbs.) torque.
6. Install fan drive wire harness support to fan shroud.
7. Install viscous fan wiring bracket onto lower fan shroud bracket. Tighten nut to 24 N·m (18 ft. lbs.).
8. Install fan shroud onto fan shroud brackets.
9. Connect fan drive wire harness.
10. Install fan shroud to upper engine fan shroud brackets. Tighten nut finger tight.
11. Tighten upper engine fan shroud bracket bolts to 24 N·m (18 ft. lbs.).
12. Tighten four fan shroud bracket nuts to 24 N·m (18 ft. lbs.).
13. Make sure of fan tip clearance all the way around inside of fan shroud.
14. Connect the battery negative cables.

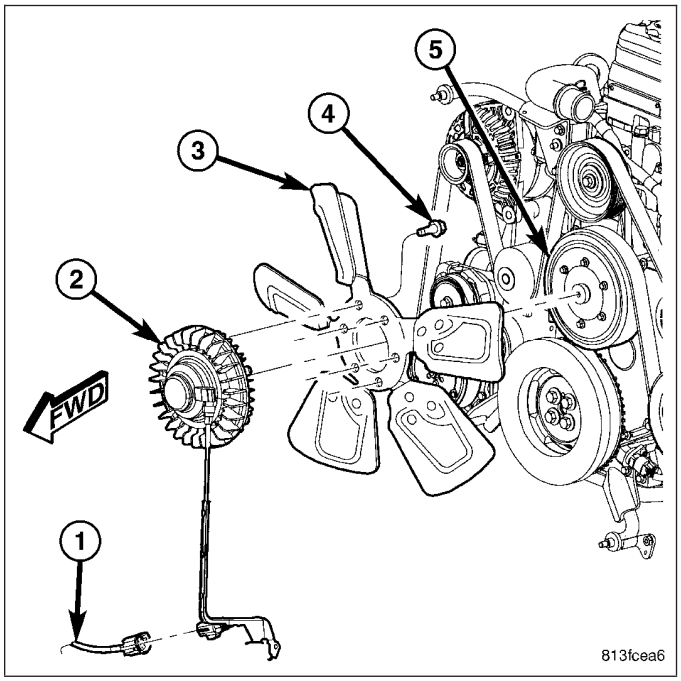

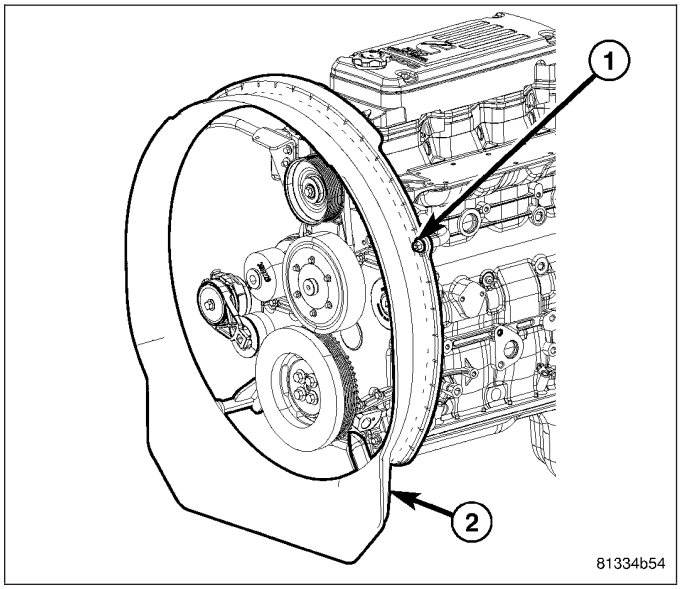

8.3L ENGINE

1. Position fan motor and shroud assembly in vehicle.
2. Install the mounting bolts. Tighten bolts to 10 N·m (98 in. lbs.)
3. Install coolant recovery bottle.
4. Raise vehicle.

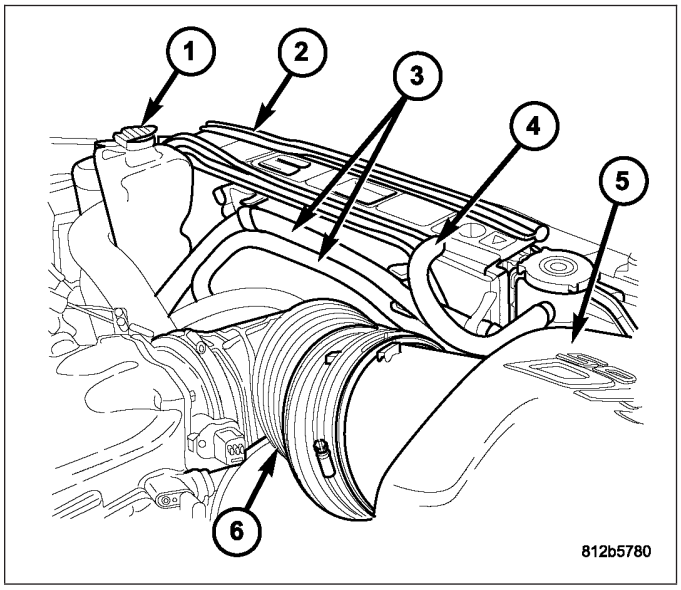

5. Connect fan solenoid electrical connector.
6. Install pressure line to radiator fan motor. Tighten fitting to 47 N·m (35 ft. lbs.).
7. Install return line to radiator fan motor. Tighten fitting to 29 N·m (21 ft. lbs.)
8. Lower vehicle.
9. Fill cooling system (Refer to 7 - COOLING - STANDARD PROCEDURE).
10. Connect negative battery cable.
11. Fill power steering system (Refer to 19 - STEERING/PUMP - STANDARD PROCEDURE).

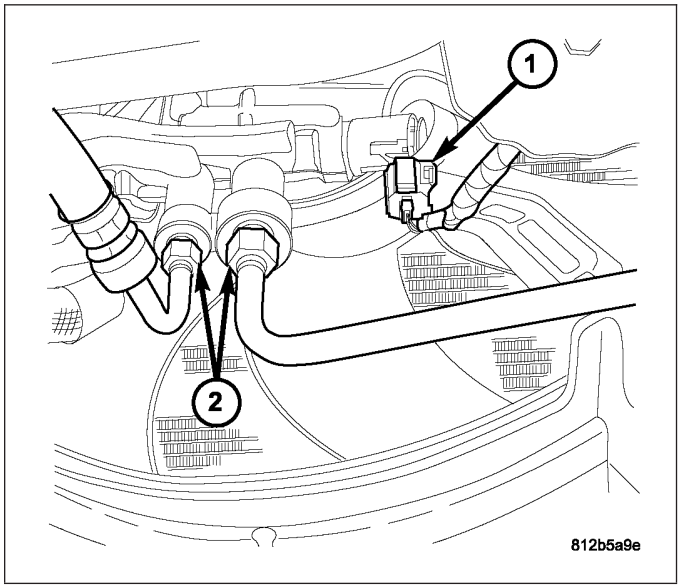

HEATER-ENGINE BLOCK

DESCRIPTION

WARNING: DO NOT OPERATE ENGINE UNLESS BLOCK HEATER CORD HAS BEEN DISCONNECTED FROM POWER SOURCE AND SECURED IN PLACE. THE POWER CORD MUST BE SECURED IN ITS RETAINING CLIPS AND ROUTED AWAY FROM EXHAUST MANIFOLDS AND MOVING PARTS.

An optional engine block heater is available with all models. The heater is equipped with a power cord. The cord is attached to an engine compartment component with tie-straps. The heater warms the engine providing easier engine starting and faster warm-up in low temperatures. The heater is mounted in a core hole of the engine cylinder block in place of a freeze plug with the heating element immersed in engine coolant. The 3.7L/4.7L gas powered engines have the block heater located to the rear on the right side of the engine.

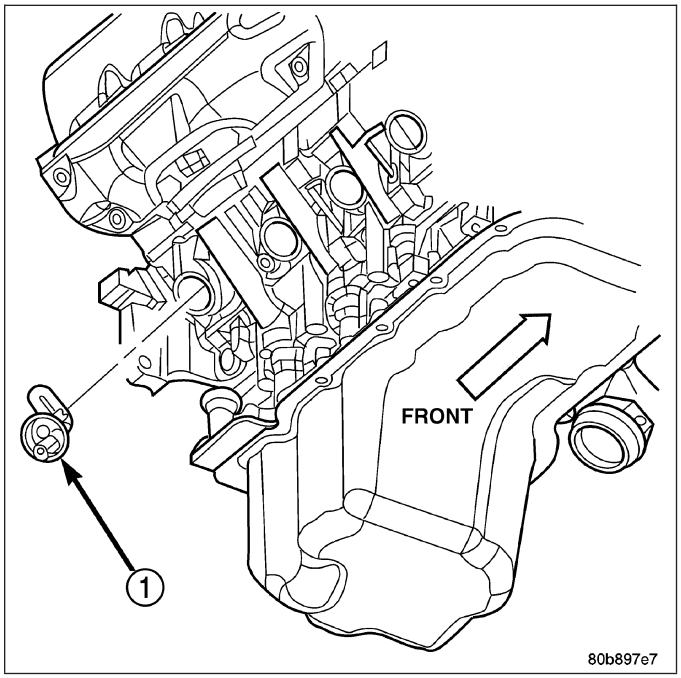

The 5.9L diesel engine has the block heater located on the right side of the engine below the exhaust manifold next to the oil cooler (1).

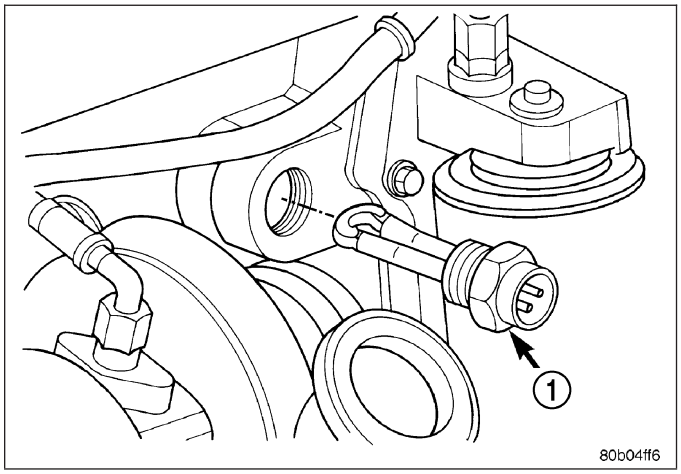

The 5.7L engine has the block heater (1) located on the left side of the engine below the exhaust manifold in the rear of the engine and is not immersed in engine coolant but makes direct contact with the block.

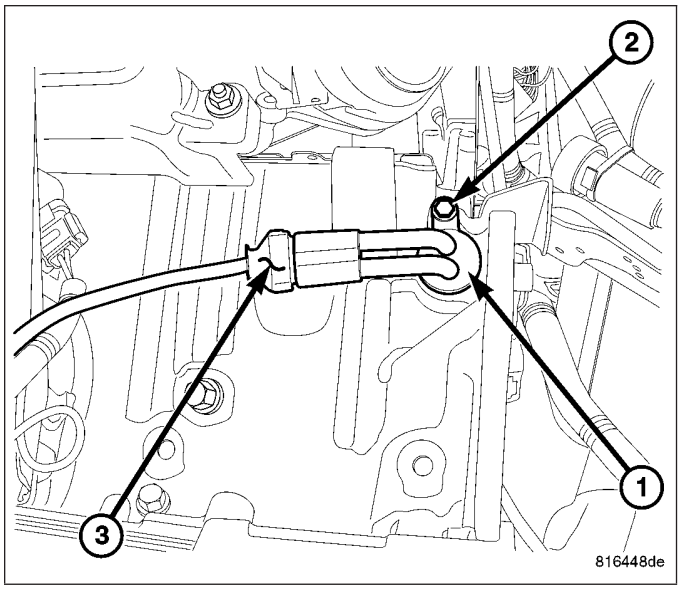

OPERATION

The heater warms the engine coolant providing easier engine starting and faster warm-up in low temperatures. Connecting the power cord to a grounded 110-120 volt AC electrical outlet with a grounded three wire extension cord provides the electricity needed to heat the element.

DIAGNOSIS AND TESTING - ENGINE BLOCK HEATER

If the unit does not operate, possible causes can be either the power cord or the heater element. Test the power cord for continuity with a 110-volt voltmeter or 110-volt test light. Test heater element continuity with an ohmmeter or a 12-volt test light.

CAUTION: To prevent damage, the power cord must be secured in it's retainer clips and away from any components that may cause abrasion or damage, such as linkages, exhaust components, etc.

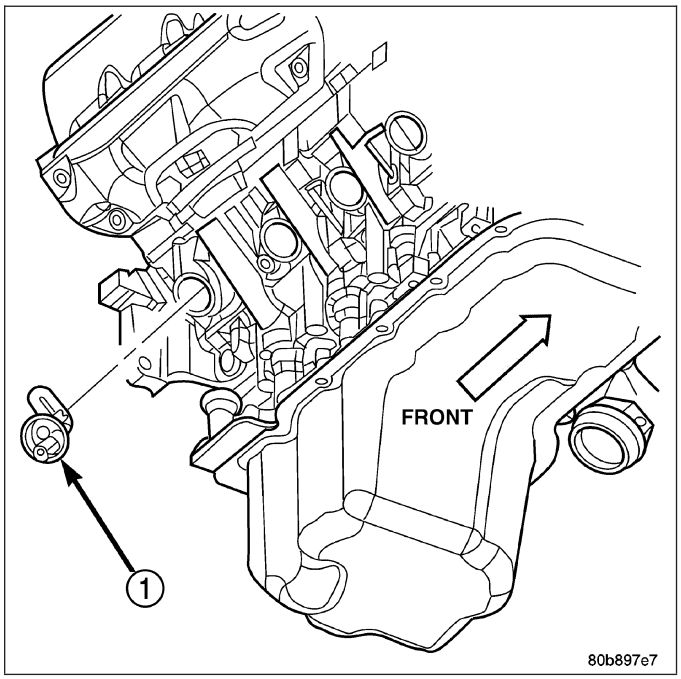

REMOVAL

REMOVAL 3.7L/4.7L

1. Disconnect the battery negative cable.
2. Drain the coolant (Refer to 7 - COOLING - STANDARD PROCEDURE).
3. Remove the power cord from the heater by unplugging.
4. Loosen (but do not completely remove) the screw at center of block heater.
5. Remove the block heater (1) by carefully prying from side-to-side. Note the direction of the heating element coil (up or down). The element coil must be installed correctly to prevent damage.

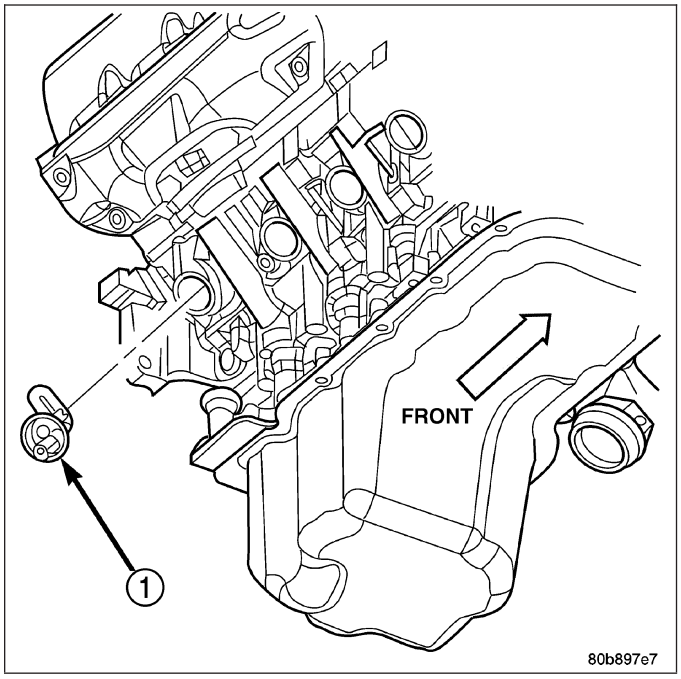

5.9L DIESEL

1. Disconnect the battery negative cables.
2. Drain coolant from radiator and cylinder block (Refer to 7 - COOLING - STANDARD PROCEDURE).
3. Unscrew the power cord retaining cap and disconnect cord from heater element.
4. Using a suitable size socket, loosen and remove the block heater element.

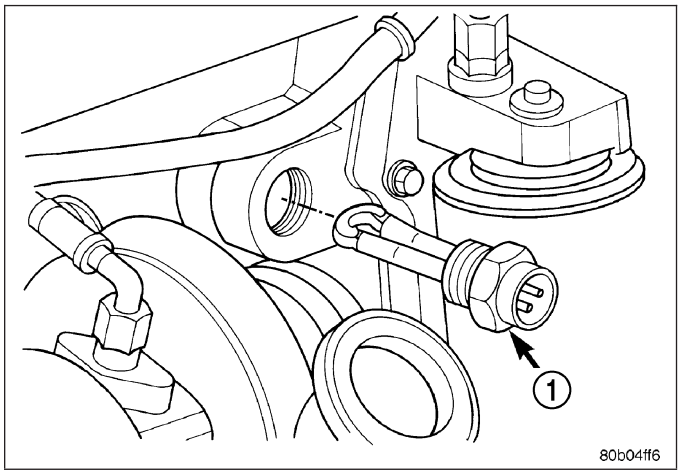

5.7L

1. Raise vehicle.
2. Remove power cord from block heater.
3. Remove bolt on block heater. Remove heater assembly.

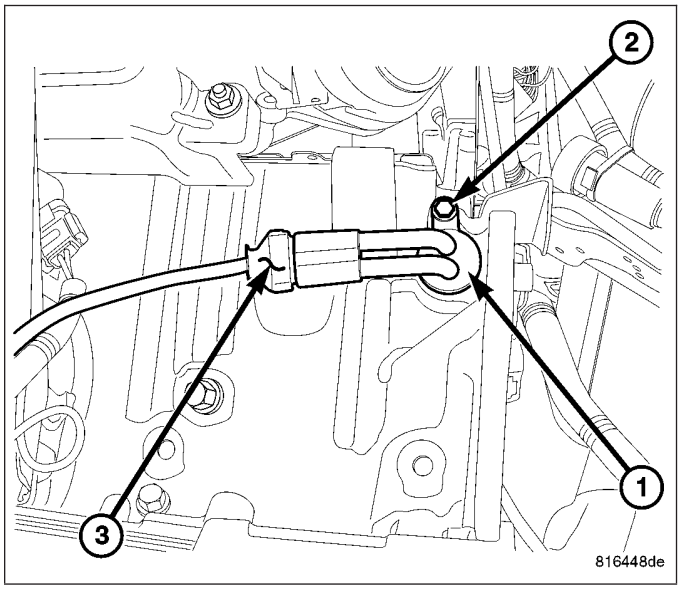

INSTALLATION

INSTALLATION 3.7L/4.7L

1. Clean and inspect the block heater hole.
2. Install the new O-ring seal(s) to heater.
3. Insert the block heater (1) into cylinder block and position the element properly.
4. With the heater fully seated, tighten center screw to 2 N·m (17 in. lbs.).
5. Fill the cooling system with the recommended coolant. (Refer to 7 - COOLING - STANDARD PROCEDURE).
6. Start and warm the engine.
7. Check the block heater for leaks.

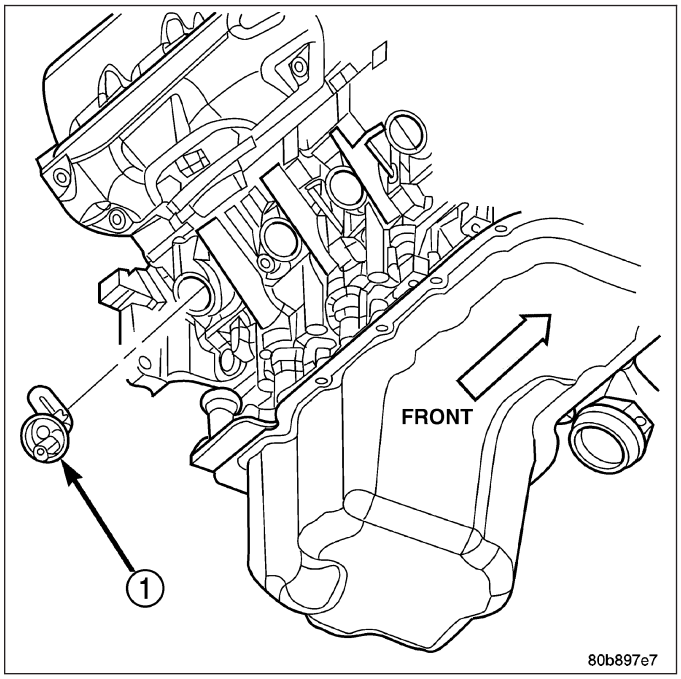

5.9L DIESEL

1. Clean and inspect the threads in the cylinder block and heater element.
2. Coat heater element threads with Mopar® Thread Sealer with Teflon.
3. Screw block heater into cylinder block and tighten to 75 N·m (55 ft. lbs.).
4. Connect block heater cord and tighten retaining cap.
5. Fill cooling system with recommended coolant (Refer to 7 - COOLING - STANDARD PROCEDURE).
6. Start and warm the engine.
7. Check block heater for leaks.

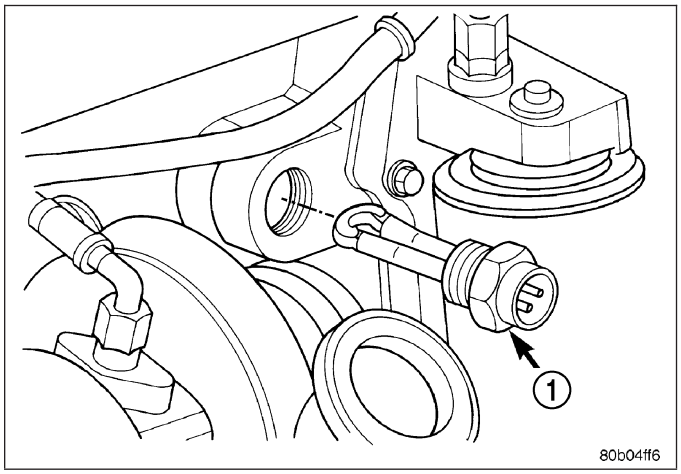

5.7L

1. Thoroughly clean cylinder block core hole and block heater seat.
2. Insert block heater assembly into the block.
3. With block heater fully seated, tighten bolt to 2 N·m (17 in. lbs.) torque.

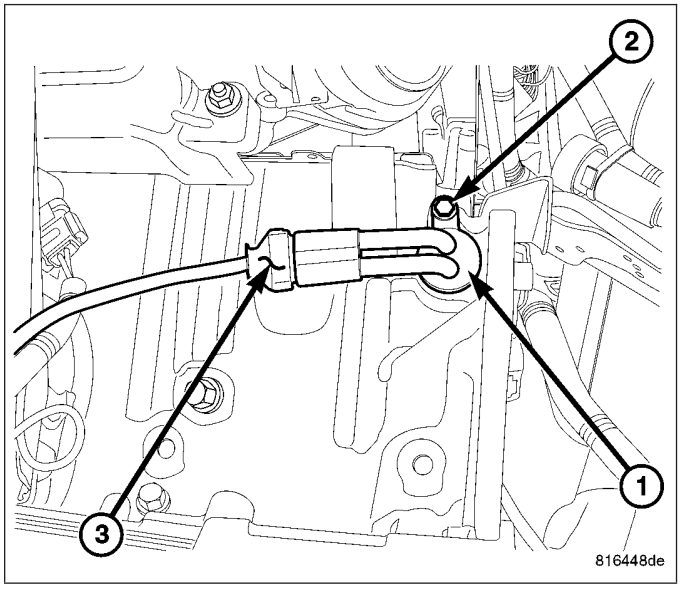

SENSOR-ENGINE COOLANT TEMPERATURE

DESCRIPTION

The Engine Coolant Temperature (ECT) sensor is used to sense engine coolant temperature. The sensor protrudes into an engine water jacket.

The ECT sensor is a two-wire Negative Thermal Coefficient (NTC) sensor. Meaning, as engine coolant temperature increases, resistance (voltage) in the sensor decreases. As temperature decreases, resistance (voltage) in the sensor increases.

OPERATION

At key-on, the Powertrain Control Module (PCM) sends out a regulated 5 volt signal to the ECT sensor. The PCM then monitors the signal as it passes through the ECT sensor to the sensor ground (sensor return).

When the engine is cold, the PCM will operate in Open Loop cycle. It will demand slightly richer air-fuel mixtures and higher idle speeds. This is done until normal operating temperatures are reached.

The PCM uses inputs from the ECT sensor for the following calculations:

- for engine coolant temperature gauge operation through CCD or PCI (J1850) communications
- Injector pulse-width
- Spark-advance curves
- ASD relay shut-down times
- Idle Air Control (IAC) motor key-on steps
- Pulse-width prime-shot during cranking
- O2 sensor closed loop times
- Purge solenoid on/off times
- Cooling fan control
- Temperature gauge operation
- A/C cutoff at high coolant temperatures
- EGR solenoid on/off times (if equipped)
- Leak Detection Pump operation (if equipped)
- Radiator fan relay on/off times (if equipped)
- Target idle speed

REMOVAL

3.7L V-6

The Engine Coolant Temperature (ECT) sensor on the 3.7L engine is installed into a water jacket at front of intake manifold near rear of generator.

WARNING: HOT, PRESSURIZED COOLANT CAN CAUSE INJURY BY SCALDING. COOLING SYSTEM MUST BE PARTIALLY DRAINED BEFORE REMOVING THE COOLANT TEMPERATURE SENSOR.

1. Partially drain the cooling system.
2. Disconnect the electrical connector from the sensor.
3. Remove the sensor from the intake manifold.

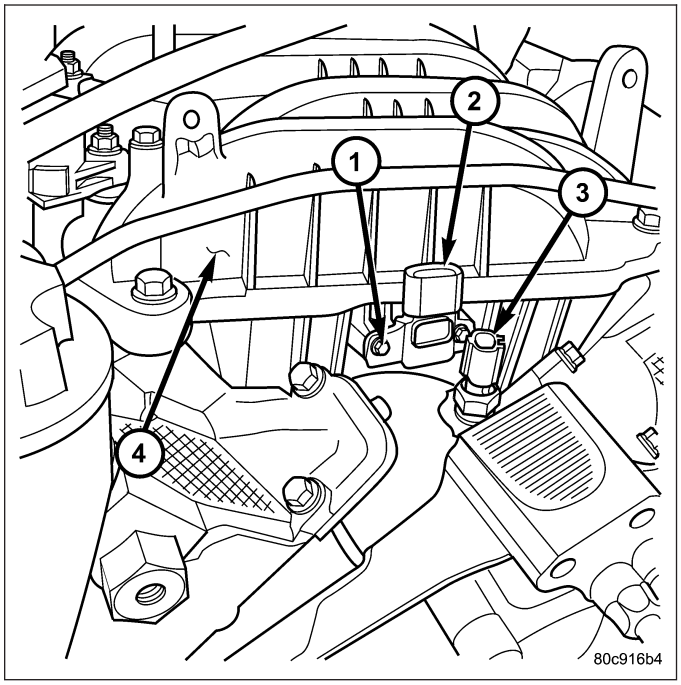

4.7L V-8

WARNING: HOT, PRESSURIZED COOLANT CAN CAUSE INJURY BY SCALDING. COOLING SYSTEM MUST BE PARTIALLY DRAINED BEFORE REMOVING THE ENGINE COOLANT TEMPERATURE (ECT) SENSOR.

The Engine Coolant Temperature (ECT) sensor on the 4.7L V-8 engine is located near the front of the intake manifold.

1. Partially drain the cooling system (Refer to 7 - COOLING - STANDARD PROCEDURE).
2. Disconnect the electrical connector from the ECT sensor.
3. Remove the sensor from the intake manifold.

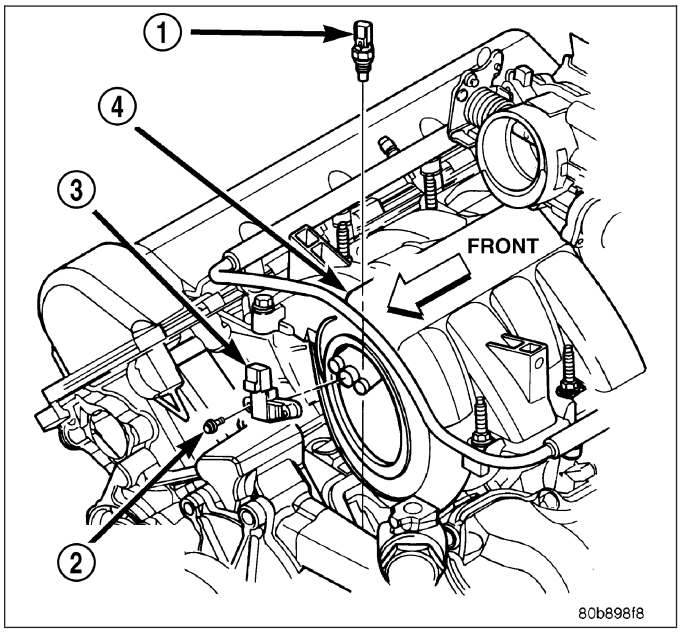

5.7L V-8

The Engine Coolant Temperature (ECT) sensor on the 5.7L engine is located under the air conditioning compressor. It is installed into a water jacket at the front of the cylinder block.

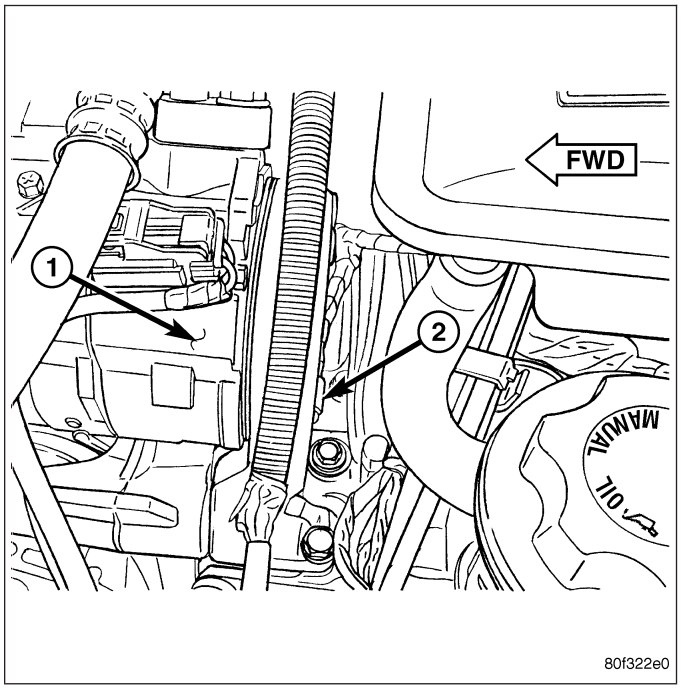

WARNING: HOT, PRESSURIZED COOLANT CAN CAUSE INJURY BY SCALDING. COOLING SYSTEM MUST BE PARTIALLY DRAINED BEFORE REMOVING THE COOLANT TEMPERATURE SENSOR.

1. Partially drain the cooling system (Refer to 7 - COOLING - STANDARD PROCEDURE).
2. Remove accessory drive belt (Refer to 7 - COOLING/ACCESSORY DRIVE/DRIVE BELTS - REMOVAL).
3. Carefully unbolt air conditioning compressor from front of engine. Do not disconnect any A/C hoses from compressor. Temporarily support compressor to gain access to ECT sensor. Refer to Heating and Air Conditioning section for information.
4. Disconnect electrical connector from sensor.
5. Remove sensor from cylinder block.

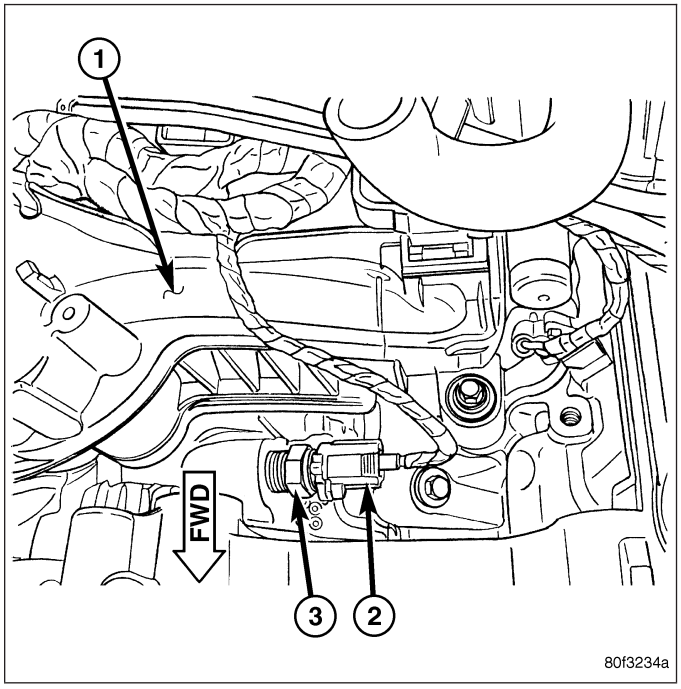

5.9L Diesel

The Engine Coolant Temperature (ECT) sensor on the 5.9L diesel engine is located near the thermostat housing.

WARNING: HOT, PRESSURIZED COOLANT CAN CAUSE INJURY BY SCALDING. COOLING SYSTEM MUST BE PARTIALLY DRAINED BEFORE REMOVING THE COOLANT TEMPERATURE SENSOR.

1. Partially drain the cooling system (Refer to 7 - COOLING - STANDARD PROCEDURE).
2. Disconnect the electrical connector (2) from the sensor (3).
3. Remove the sensor from the cylinder head.

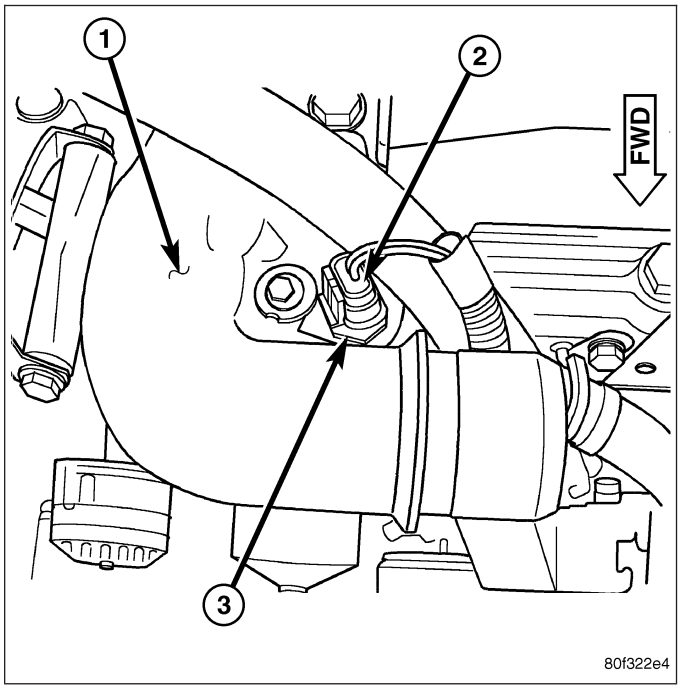

8.3L V-10

The Engine Coolant Temperature (ECT) sensor on the 8.0L V-10 engine is threaded into the thermostat housing.

WARNING: HOT, PRESSURIZED COOLANT CAN CAUSE INJURY BY SCALDING. COOLING SYSTEM MUST BE PARTIALLY DRAINED BEFORE REMOVING THE COOLANT TEMPERATURE SENSOR.

1. Partially drain the cooling system (Refer to 7 - COOLING - STANDARD PROCEDURE).
2. Disconnect the electrical connector from the sensor.
3. Remove the sensor from the cylinder head.

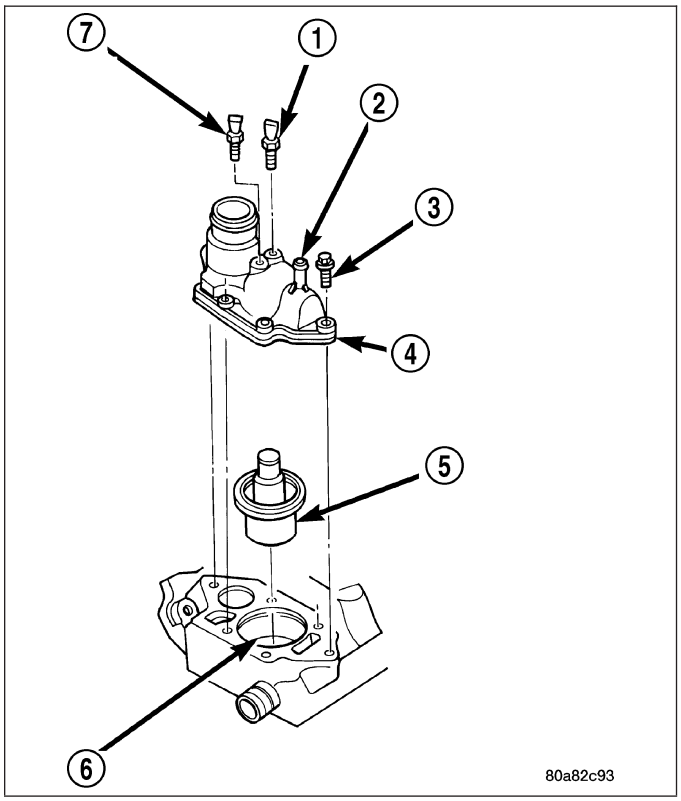

INSTALLATION

3.7L V-6

1. Apply thread sealant to sensor threads.
2. Install sensor to engine.
3. Tighten sensor to 11 N·m (8 ft. lbs.) torque.
4. Connect electrical connector to sensor.
5. Replace any lost engine coolant. (Refer to 7 - COOLING - STANDARD PROCEDURE).

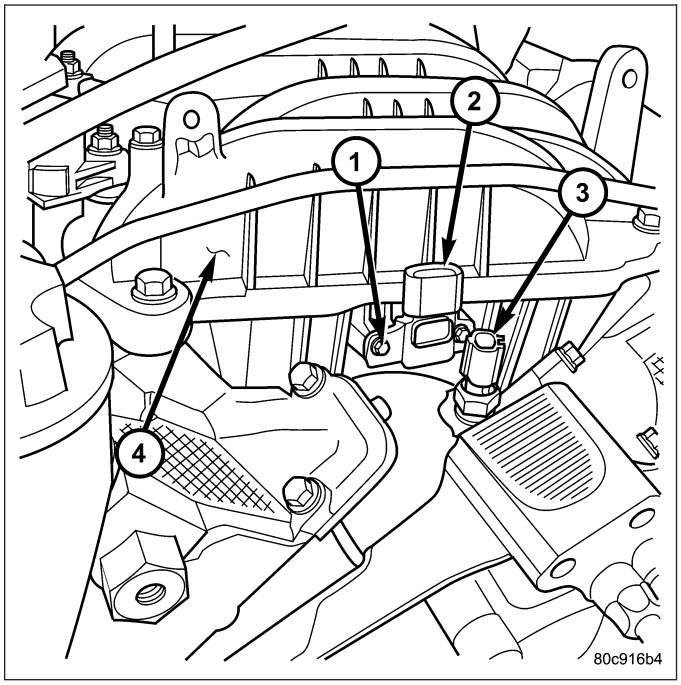

4.7L V-8

1. Apply thread sealant to sensor threads.
2. Install sensor to engine.
3. Tighten sensor to 11 N·m (8 ft. lbs.) torque.
4. Connect electrical connector to sensor.
5. Replace any lost engine coolant. (Refer to 7 - COOLING - STANDARD PROCEDURE).

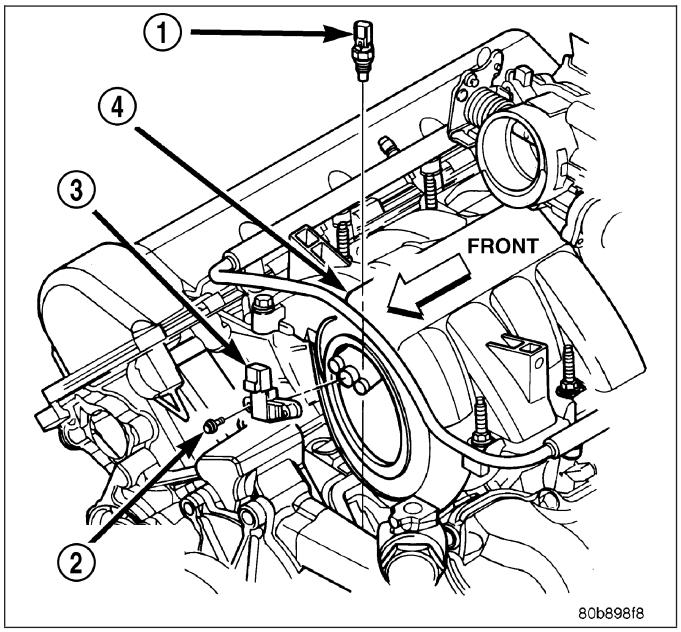

5.7L V-8

1. Apply thread sealant to sensor threads.
2. Install sensor into engine.
3. Tighten sensor to 11 N·m (8 ft. lbs.) torque.
4. Connect electrical connector to sensor.
5. Carefully bolt air conditioning compressoronto the front of engine. Refer to Heating and Air Conditioning section for information.
6. Install accessory drive belt (Refer to 7 - COOLING/ ACCESSORY DRIVE/DRIVE BELTS - INSTALLATION).
7. Replace any lost engine coolant. (Refer to 7 - COOLING - STANDARD PROCEDURE).

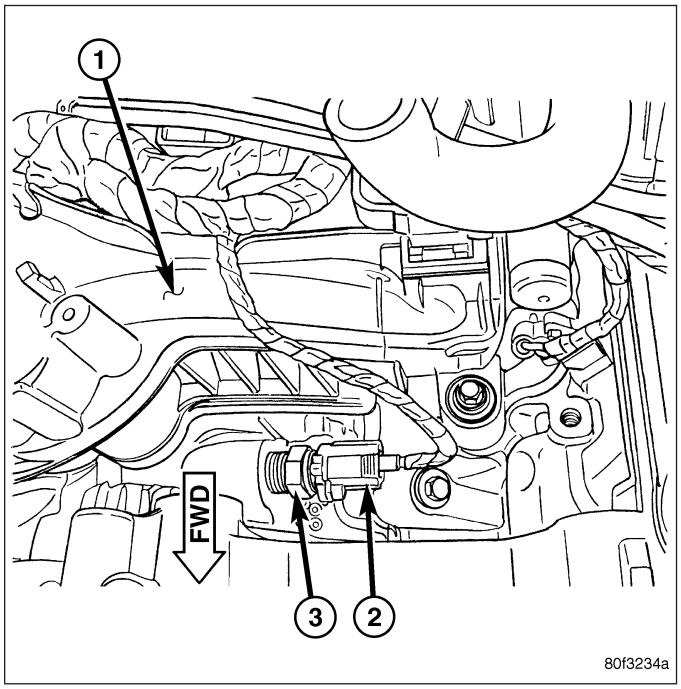

5.9L Diesel

1. Install sensor (3) to engine.
2. Tighten sensor to 18 N·m (13 ft. lbs.) torque.
3. Connect electrical connector (2) to sensor (3).
4. Replace any lost engine coolant (Refer to 7 - COOLING - STANDARD PROCEDURE).

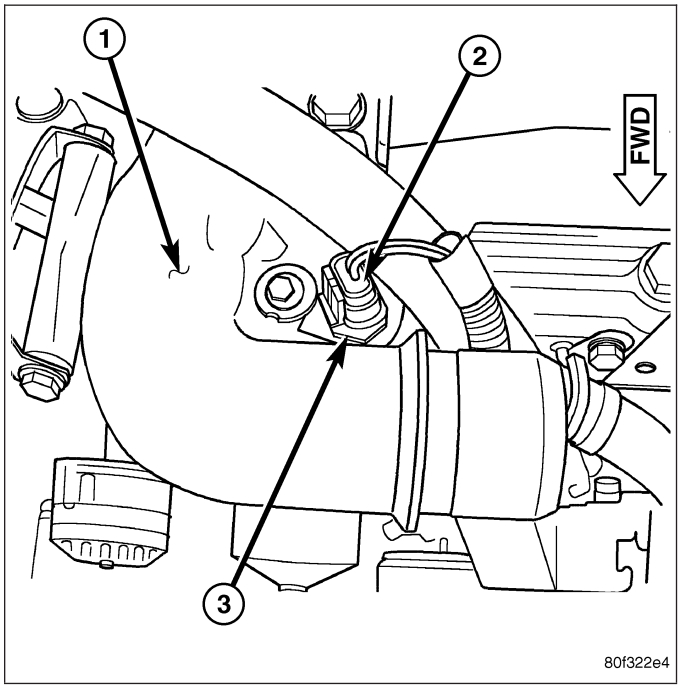

8.3L V-10

1. Apply thread sealant to sensor threads.
2. Install sensor to engine.
3. Tighten sensor to 11 N·m (8 ft. lbs.) torque.
4. Connect electrical connector to sensor.
5. Replace any lost engine coolant (Refer to 7 - COOLING - STANDARD PROCEDURE).

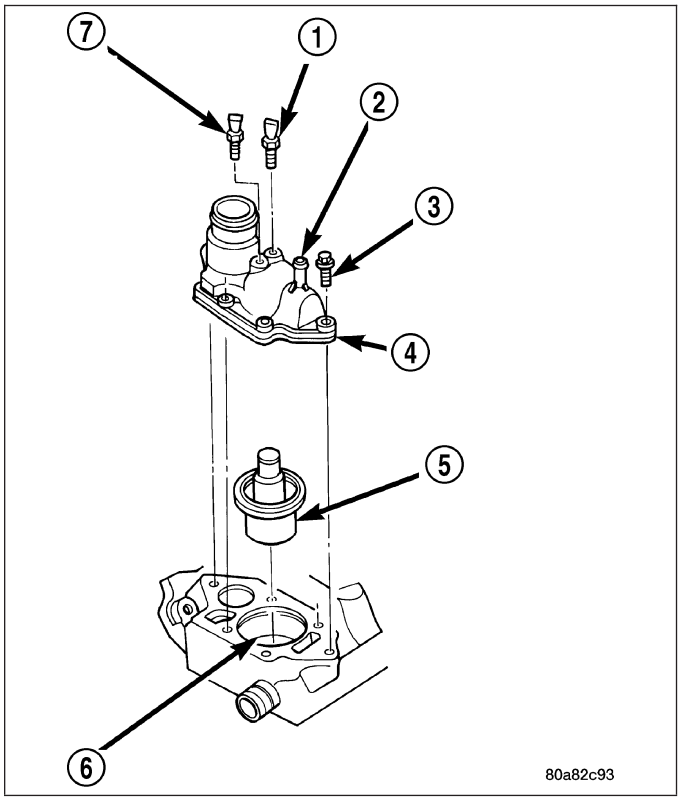

THERMOSTAT-ENGINE COOLANT

DESCRIPTION

GAS ENGINE

CAUTION: Do not operate the engine without a thermostat, except for servicing or testing.

The 3.7L/4.7L/5.7L engines use a pellet-type thermostat that controls the operating temperature of the engine by controlling the amount of coolant flow to the radiator. The 8.3L engine uses a movable sleeve type thermostat. On all engines the thermostat is closed below 195°F (90°C). Above this temperature, coolant is allowed to flow to the radiator. This provides quick engine warm up and overall temperature control.

Coolant leakage into the pellet container will cause the thermostat to fail in the open position. Thermostats very rarely stick. Do not attempt to free a thermostat with a prying device.

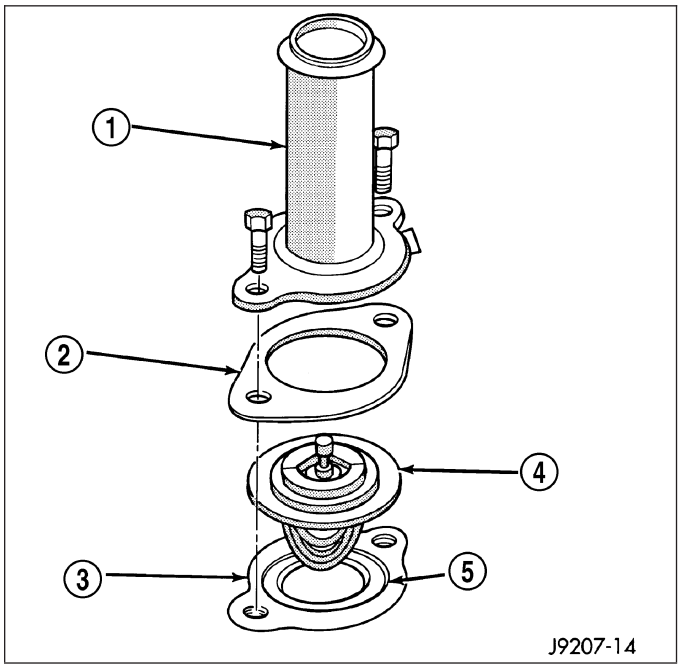

On the 3.7L/4.7L engine the thermostat is designed to block the flow of the coolant bypass journal by 50% instead of completely blocking the flow. This design controls coolant temperature more accurately.

The same thermostat is used for winter and summer seasons. An engine should not be operated without a thermostat, except for servicing or testing. Operating without a thermostat causes other problems. These are: longer engine warm-up time, unreliable warm-up performance, increased exhaust emissions and crankcase condensation. This condensation can result in sludge formation.

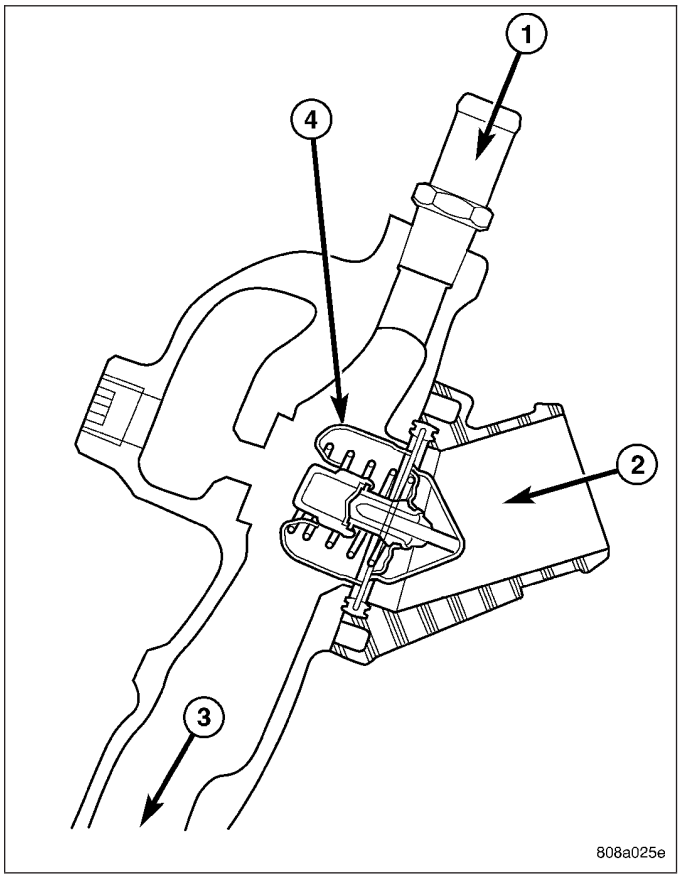

5.9L DIESEL

CAUTION: Do not operate an engine without a thermostat, except for servicing or testing. An engine with the thermostat removed will operate in the radiator bypass mode, causing an overheat condition.

The thermostat of the 5.9L diesel engine is located in the front of the cylinder head, underneath the thermostat housing.

The same thermostat is used for winter and summer seasons. An engine should not be operated without a thermostat, except for servicing or testing. Operating without a thermostat will cause overheating.

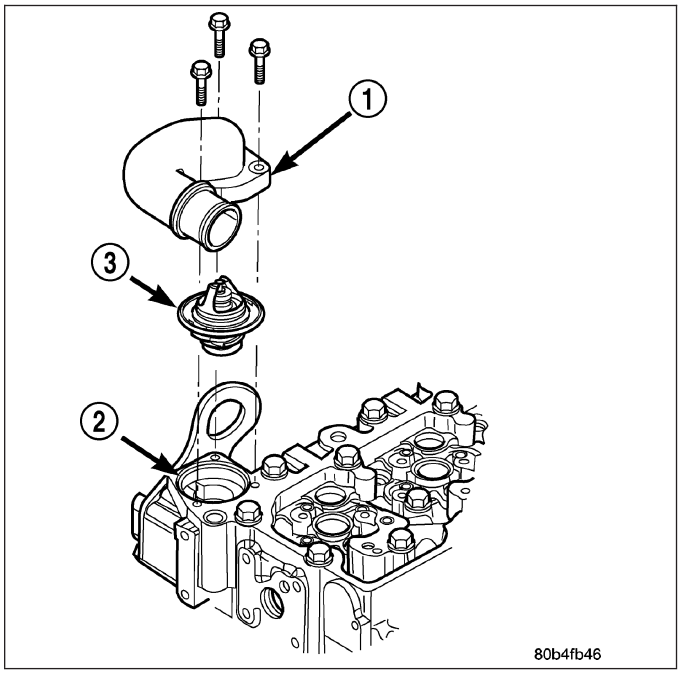

OPERATION

3.7L/4.7L/5.7L ENGINE

The wax pellet is located in a sealed container at the spring end of the thermostat. When heated, the pellet expands, overcoming closing spring tension and water pump pressure to force the valve to open.

8.3L ENGINE

The thermostat's primary purpose is to maintain engine temperature in a range that will provide satisfactory engine performance and emission levels under all expected driving conditions.

The thermostat is unique because the center does not open and close like a conventional thermostat; it works like a sliding sleeve. The outside sleeve moves, directing coolant flow through the engine block or through the bypass passages back to the water pump. During warm-up below 85°C (185°F), the thermostat is seated in the retracted position. This will allow the coolant to flow into the bypass passage, and back to the water pump. At 85°C (185°F) the thermostat begins to open, allowing coolant to flow through both the bypass and the radiator. At 97°C (207°F) the thermostat will fully open, blocking the path to the bypass, allowing all coolant to flow through the radiator.

DIAGNOSIS AND TESTING

THERMOSTAT

ON-BOARD DIAGNOSTICS - GAS ENGINES

All **gasoline powered models** are equipped with On-Board Diagnostics for certain cooling system components. Refer to On-Board Diagnostics (OBD) in the Diagnosis section of this group for additional information. If the powertrain control module (PCM) detects low engine coolant temperature, it will record a Diagnostic Trouble Code (DTC) in the PCM memory. Do not change a thermostat for lack of heat as indicated by the instrument panel gauge or by poor heater performance unless a DTC is present. Refer to the Diagnosis section of this group for other probable causes.

The DTC can also be accessed through the DRBIII® scan tool. Refer to the appropriate Powertrain Diagnostic Procedures information for diagnostic information and operation of the DRBIII® scan tool.

5.9L DIESEL ENGINE

The cooling system used with the diesel engine provides the extra coolant capacity and extra cooling protection needed for higher GVWR (Gross Vehicle Weight Rating) and GCWR (Gross Combined Weight Rating) vehicles.

This system capacity will not affect warm up or cold weather operating characteristics if the thermostat is operating properly. This is because coolant will be held in the engine until it reaches the thermostat “set” temperature.

Diesel engines, due to their inherent efficiency are slower to warm up than gasoline powered engines, and will operate at lower temperatures when the vehicle is unloaded. Because of this, lower temperature gauge readings for diesel versus gasoline engines may, at times be normal.

Typically, complaints of low engine coolant temperature are observed as low heater output when combined with cool or cold outside temperatures.

To help promote faster engine warm-up, the electric engine block heater must be used with cool or cold outside temperatures. This will help keep the engine coolant warm when the vehicle is parked.

A “Cold Weather Cover” is available from the parts department through the Mopar Accessories product line. This accessory cover is designed to block airflow entering the radiator and engine compartment to promote faster engine warm-up. It attaches to the front of the vehicle at the grill opening. **The cover is to be used with cool or cold temperatures only. If used with high outside temperatures, serious engine damage could result.** Refer to the literature supplied with the cover for additional information.

For engines equipped with exhaust brakes, this device can be used to aid engine warm-up while the engine is idling.

1. To determine if the thermostat is defective, it must be removed from the vehicle (Refer to 7 - COOLING/ENGINE/ ENGINE COOLANT THERMOSTAT - REMOVAL).
2. After the thermostat has been removed, examine the thermostat and inside of thermostat housing for contaminants. If contaminants are found, the thermostat may already be in a “stuck open” position. Flush the cooling system before replacing thermostat (Refer to 7 - COOLING - STANDARD PROCEDURE).
3. Place the thermostat into a container filled with water.
4. Place the container on a hot plate or other suitable heating device.
5. Place a commercially available radiator thermometer into the water.
6. Apply heat to the water while observing the thermostat and thermometer.
7. The thermostat will begin to open at 85.5 - 89.4°C. (186 - 193°F). If the valve starts to move before this temperature is reached, it is opening too early. Replace thermostat. The thermostat should be fully open (valve will stop moving) at 97°C (207°F). If the valve is still moving when the water temperature reaches 97°C (207°F), it is opening too late. Replace thermostat. If the valve refuses to move at any time, replace thermostat.

REMOVAL

3.7L/4.7L ENGINE

WARNING: DO NOT LOOSEN THE RADIATOR DRAINCOCK WITH THE COOLING SYSTEM HOT AND PRESSURIZED. SERIOUS BURNS FROM THE COOLANT CAN OCCUR.

Do not waste reusable coolant. If the solution is clean, drain the coolant into a clean container for reuse.

If the thermostat is being replaced, be sure that the replacement is the specified thermostat for the vehicle model and engine type.

1. Disconnect the negative battery cable.
2. Drain the cooling system (Refer to 7 - COOLING - STANDARD PROCEDURE).
3. Raise and support the vehicle.
4. Remove the splash shield.
5. Remove the lower radiator hose clamp and the lower radiator hose at the thermostat housing.
6. Remove the thermostat housing mounting bolts, thermostat housing and thermostat.

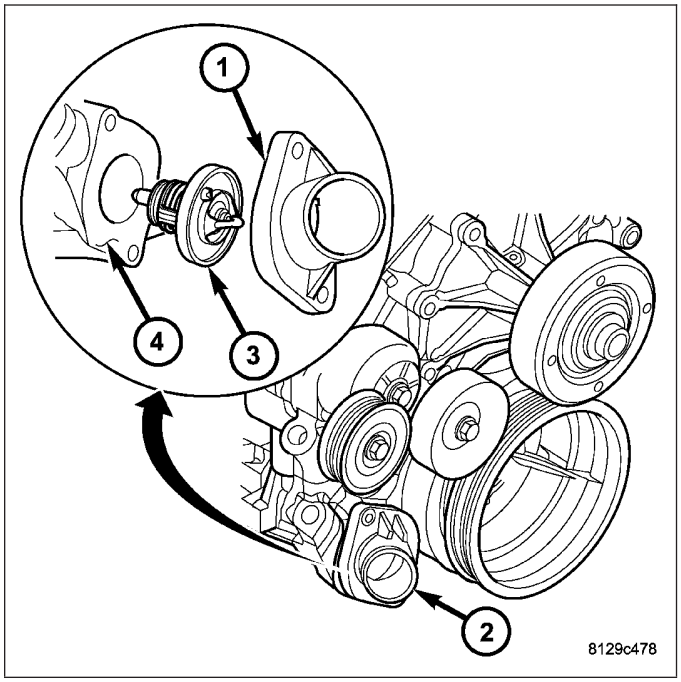

5.7L ENGINE

WARNING: DO NOT LOOSEN THE RADIATOR DRAINCOCK WITH THE COOLING SYSTEM HOT AND PRESSURIZED. SERIOUS BURNS FROM THE COOLANT CAN OCCUR.

Do not waste reusable coolant. If the solution is clean, drain the coolant into a clean container for reuse.

If the thermostat is being replaced, be sure that the replacement is the specified thermostat for the vehicle model and engine type.

1. Disconnect the negative battery cable.
2. Drain the cooling system
3. Remove the radiator hose clamp (3) and radiator hose (4) at the thermostat housing (2).
4. Remove the thermostat housing mounting bolts, thermostat housing and thermostat.

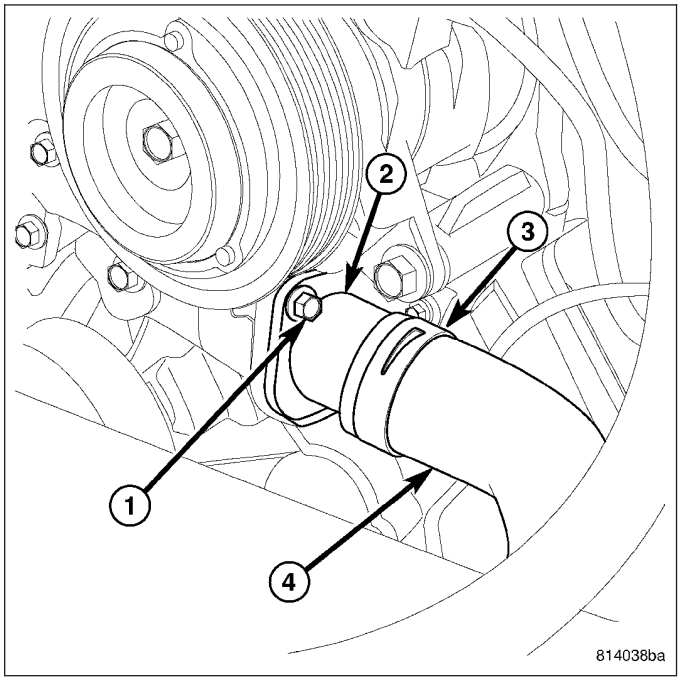

5.9L DIESEL ENGINE

WARNING: DO NOT LOOSEN THE RADIATOR DRAINCOCK WITH THE SYSTEM HOT AND PRESSURIZED. SERIOUS BURNS FROM THE COOLANT CAN OCCUR.

Do not waste reusable coolant. If the solution is clean, drain the coolant into a clean container for reuse.

1. Disconnect the battery negative cables.
2. Drain cooling system until coolant level is below thermostat (Refer to 7 - COOLING - STANDARD PROCEDURE).

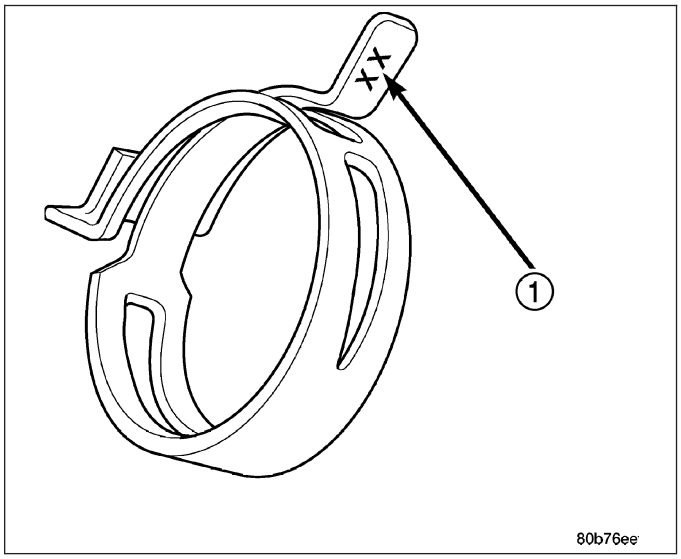

WARNING: CONSTANT TENSION HOSE CLAMPS ARE USED ON MOST COOLING SYSTEM HOSES. WHEN REMOVING OR INSTALLING, USE ONLY TOOLS DESIGNED FOR SERVICING THIS TYPE OF CLAMP, SUCH AS SPECIAL CLAMP TOOL (NUMBER 6094).

CAUTION: A number or letter is stamped into the tongue of constant tension clamps. If replacement is necessary, use only an original equipment clamp with a matching number or letter.

3. Remove radiator hose clamp and hose from thermostat housing (1).
4. Remove the three water outlet-to-cylinder head bolts and remove the water outlet connector.
5. Clean the mating surfaces of the water outlet connector and clean the thermostat seat groove at the top of the thermostat housing.

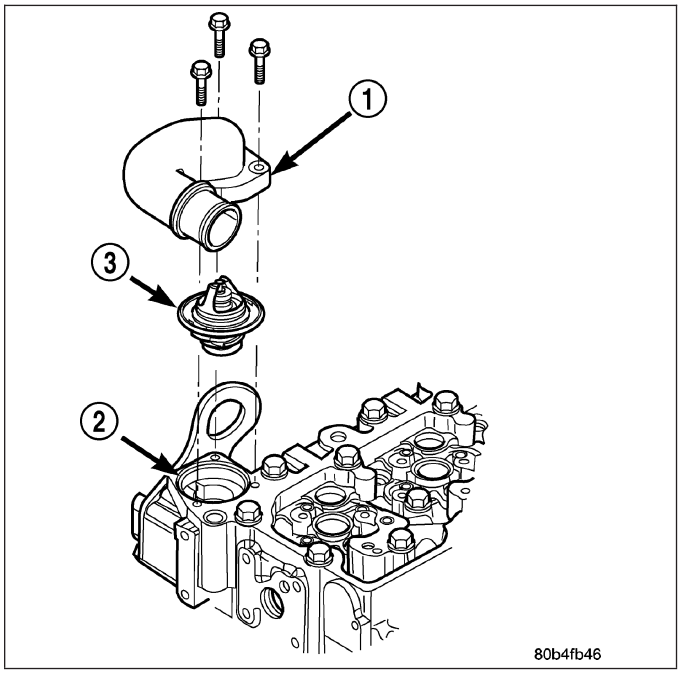

8.3L ENGINE

1. Partially drain the cooling system below the thermostat level.
2. Disconnect throttle body air inlet hose, remove air cleaner housing assembly.
3. Disconnect upper radiator hose from thermostat housing.
4. Remove thermostat housing attaching bolts in the reverse order of the torque sequence.
5. Remove thermostat housing.
6. Remove thermostat from housing and discard thermostat housing gasket.

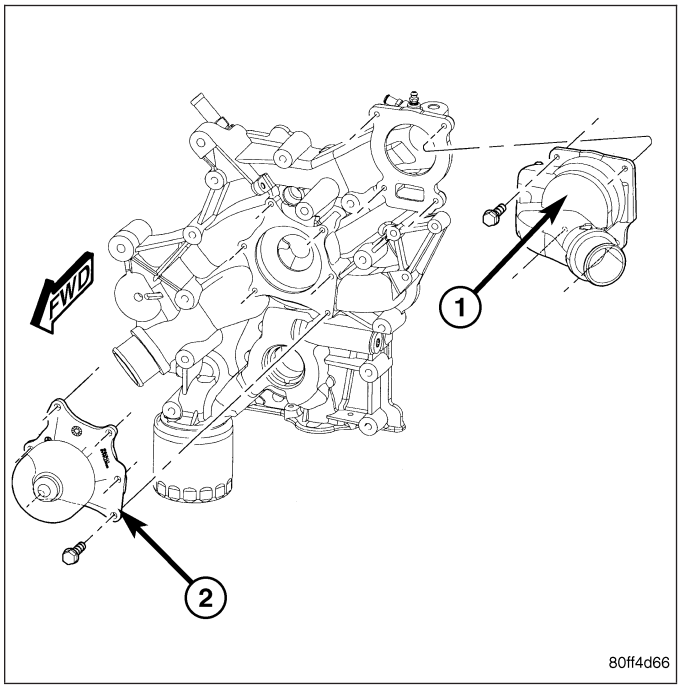

INSTALLATION

3.7L/4.7L ENGINE

1. Clean the mating areas of the timing chain cover and the thermostat housing.
2. Install the thermostat (spring side down) into the recessed machined groove on the timing chain cover.
3. Position the thermostat housing on the timing chain cover.
4. Install the housing-to-timing chain cover bolts. Tighten the bolts to 13 N·m (112 in. lbs.).

CAUTION: The housing must be tightened evenly and the thermostat must be centered into the recessed groove in the timimg chain cover. If not, it may result in a cracked housing, damaged timing chain cover threads or coolant leaks.

5. Install the lower radiator hose on the thermostat housing.
6. Install the splash shield.
7. Lower the vehicle.
8. Fill the cooling system (Refer to 7 - COOLING - STANDARD PROCEDURE).
9. Connect negative battery cable.
10. Start and warm the engine. Check for leaks.

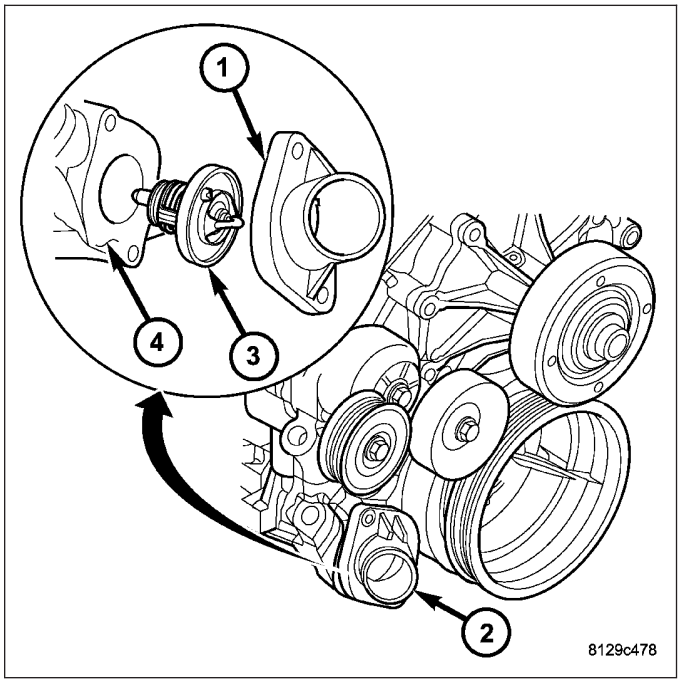

5.7L ENGINE

1. Position the thermostat and housing (2) on the front cover.
2. Install thermostat housing bolts (1). Tighten the bolts (1) to 13 N·m (112 in. lbs.).
3. Install the radiator hose (4) onto the thermostat housing (2).
4. Fill the cooling system (Refer to 7 - COOLING - STANDARD PROCEDURE).
5. Connect negative battery cable.
6. Start and warm the engine. Check for leaks.

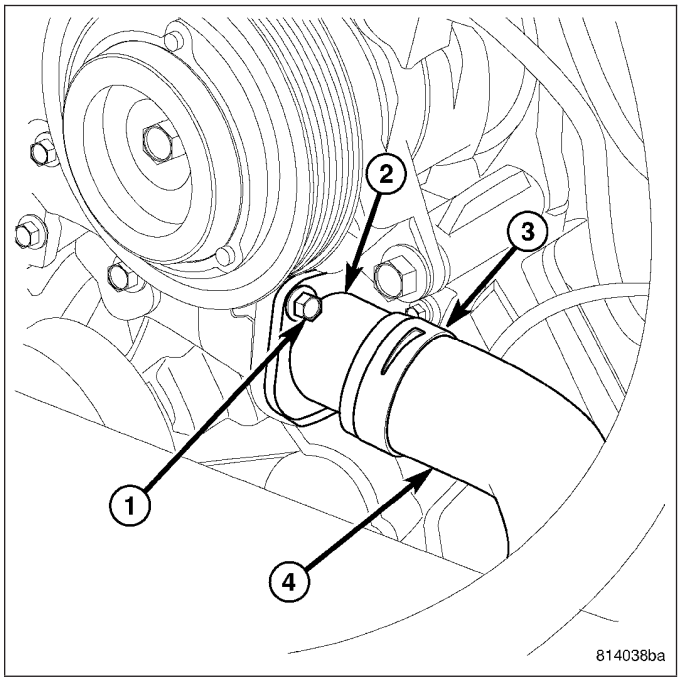

5.9L DIESEL ENGINE

1. Inspect thermostat seal for cuts or nicks. Replace if damaged.
2. Install the thermostat into the groove in the top of the cylinder head (2).
3. Install the thermostat housing (1) and bolts. Tighten the bolts to 10 N·m (89 in. lbs.) torque.
4. Install the radiator upper hose and clamp.
5. Fill the cooling system with coolant (Refer to 7 - COOLING - STANDARD PROCEDURE).
6. Connect the battery negative cables.
7. Start the engine and check for coolant leaks. Run engine to check for proper thermostat operation.

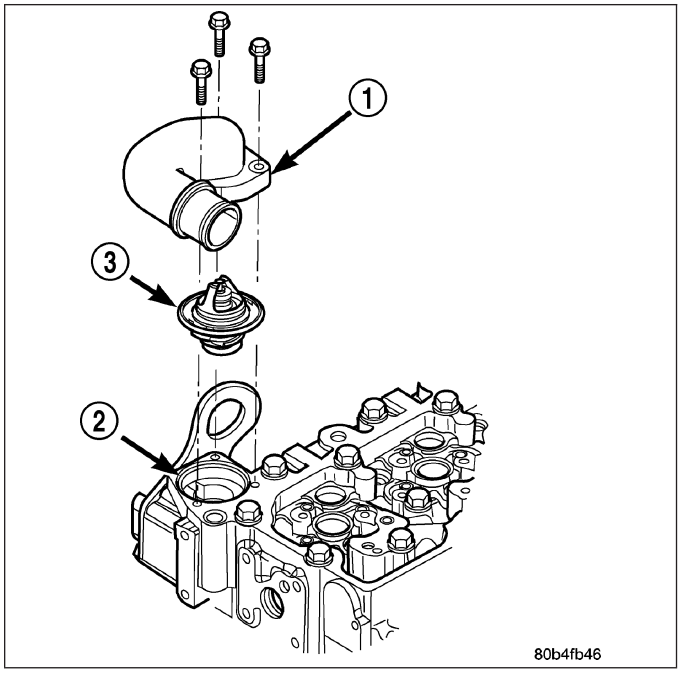

8.3L ENGINE

CAUTION: Do not use a metal scraper to clean aluminum sealing surfaces, as damage to surfaces may occur. Use only a plastic scraper and Mopar® Brake Parts Cleaner or the equivalent

1. Clean both sealing surfaces using a plastic scraper and Mopar® Brake Parts Cleaner or the equivalent. Take care not to scratch or gouge sealing surfaces.
2. Install new thermostat into thermostat housing.
3. Install new thermostat housing gasket.

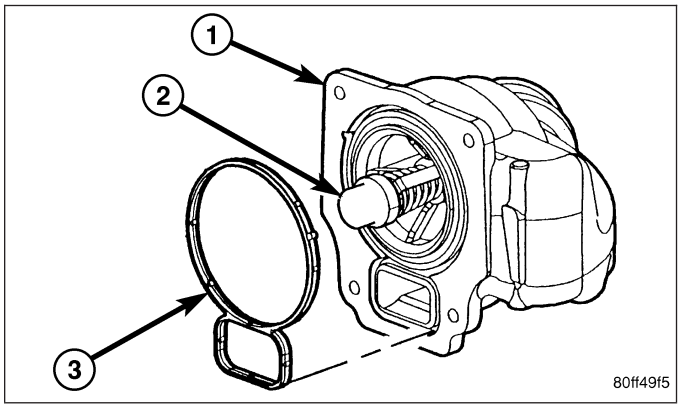

4. Install thermostat housing to chain case cover.
5. Tighten thermostat housing bolts in the sequence shown to 11 N·m (95 in. lbs.).
6. Connect upper radiator hose to thermostat housing.
7. Install air cleaner housing assembly, connect throttle body air inlet hose.
8. Refill cooling system (Refer to 7 - COOLING - STANDARD PROCEDURE).

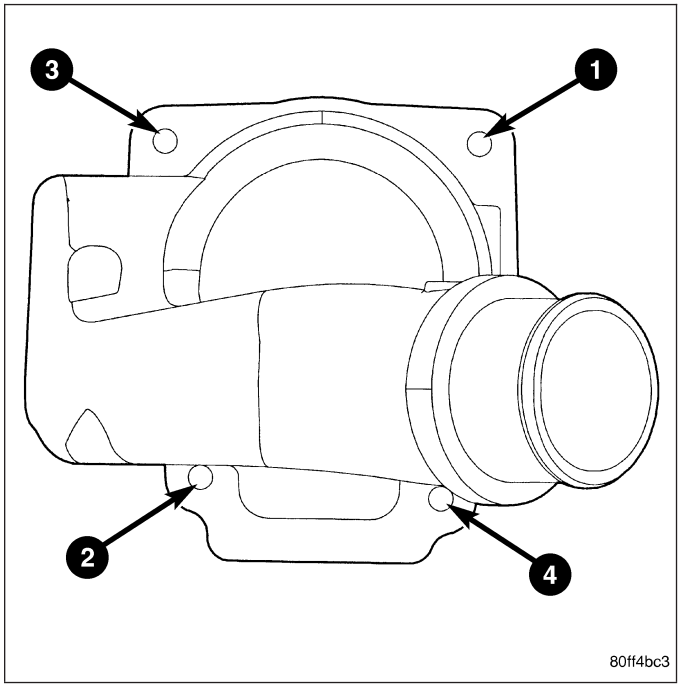

FAN DRIVE VISCOUS

DESCRIPTION

3.7L/4.7L/5.7L ENGINE (BI-METAL COIL TYPE)

The thermal Bi-Metal Coil type viscous fan drive is a silicone-fluid- filled coupling used to connect the fan blades to the water pump shaft. The coupling allows the fan to be driven in a normal manner. This is done at low engine speeds while limiting the top speed of the fan to a predetermined maximum level at higher engine speeds.

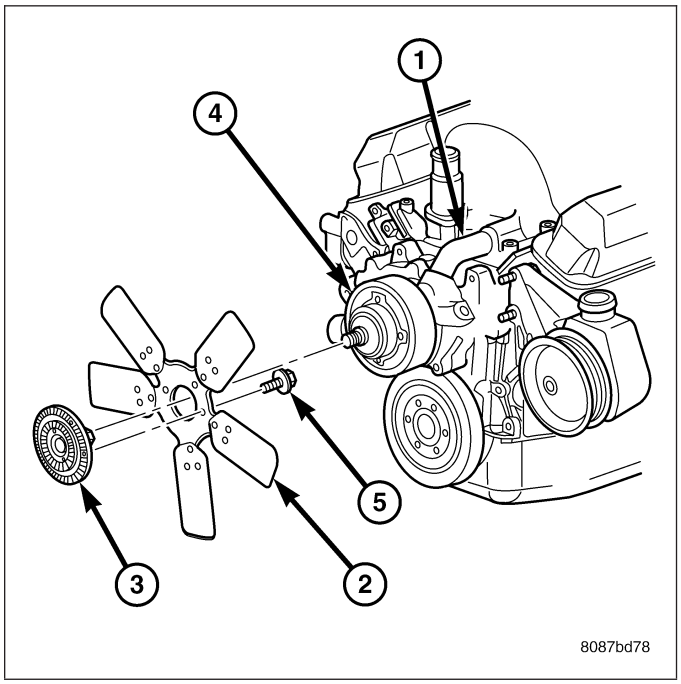

5.9L DIESEL ENGINE (ELECTRONICALLY CONTROLLED FAN DRIVE)

The electronically controlled viscous fan drive is attached to the fan drive pulley mounted to the engine. The coupling allows the fan to be driven in a normal manner. The fan speed is controlled by the electronic control module.

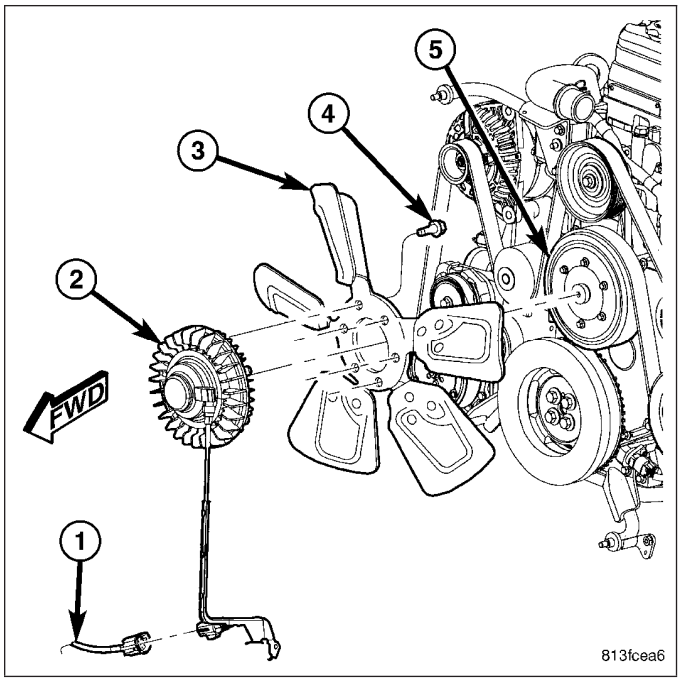

OPERATION

3.7L/4.7L/5.7L ENGINE (BI-METAL COIL TYPE)

A thermostatic bimetallic spring coil is located on the front face of the viscous fan drive unit (a typical viscous unit is shown in. This spring coil reacts to the temperature of the radiator discharge air. It engages the viscous fan drive for higher fan speed if the air temperature from the radiator rises above a certain point. Until additional engine cooling is necessary, the fan will remain at a reduced rpm regardless of engine speed.

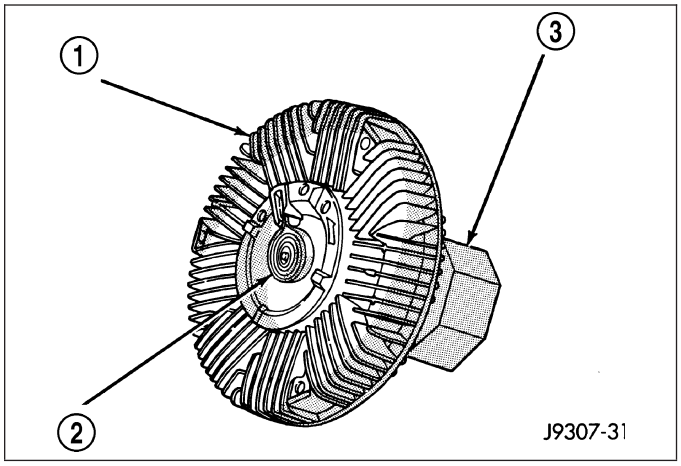

Only when sufficient heat is present, will the viscous fan drive engage. This is when the air flowing through the radiator core causes a reaction to the bimetallic coil. It then increases fan speed to provide the necessary additional engine cooling.

Once the engine has cooled, the radiator discharge temperature will drop. The bimetallic coil again reacts and the fan speed is reduced to the previous disengaged speed.

5.9L DIESEL (ELECTRONICALLY CONTROLLED FAN DRIVE)

The Engine Control Module (ECM) controls the level of engagement of the electronically controlled viscous fan clutch by monitoring coolant temperature, intake manifold temperature, air conditioning pressure and transmission oil temperature. Based on cooling requirements, the ECM sends a signal to the viscous fan clutch to increase or decrease the fan speed.

Fan speed is monitored by the ECM. Fan speeds above or below a calibrated threshold will set a DTC. Circuit concerns will also set fan clutch DTC's.

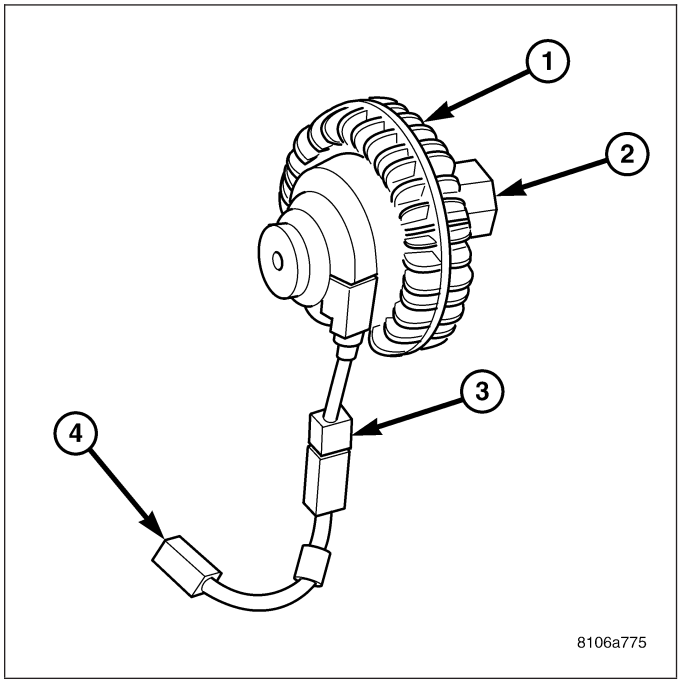

DIAGNOSIS AND TESTING

VISCOUS FAN DRIVE

NOISE

NOTE: It is normal for fan noise to be louder (roaring) when:

- The underhood temperature is above the engagement point for the viscous drive coupling. This may occur when ambient (outside air temperature) is very high.
- Engine loads and temperatures are high such as when towing a trailer.

- Cool silicone fluid within the fan drive unit is being redistributed back to its normal disengaged (warm) position. This can occur during the first 15 seconds to one minute after engine start-up on a cold engine.

LEAKS

Viscous fan drive operation is not affected by small oil stains near the drive bearing. If leakage appears excessive, replace the fan drive unit.

VISCOUS DRIVE

For the following test, the cooling system must be in good condition. It also will ensure against excessively high coolant temperature.

WARNING: BE SURE THAT THERE IS ADEQUATE FAN BLADE CLEARANCE BEFORE DRILLING.

1. Drill a 3.18-mm (1/8-in) diameter hole in the top center of the fan shroud.
2. Obtain a dial thermometer with an 8 inch stem (or equivalent). It should have a range of -18°-to-105°C (0°-to-220° F). Insert thermometer through the hole in the shroud. Be sure that there is adequate clearance from the fan blades.
3. Connect a tachometer and an engine ignition timing light. The timing light is to be used as a strobe light. This step cannot be used on the diesel engine.
4. Block the air flow through the radiator. Secure a sheet of plastic in front of the radiator. Use tape at the top to secure the plastic and be sure that the air flow is blocked.
5. Be sure that the air conditioner (if equipped) and blowe fan is turned off.

WARNING: USE EXTREME CAUTION WHEN THE ENGINE IS OPERATING. DO NOT STAND IN A DIRECT LINE WITH THE FAN. DO NOT PUT YOUR HANDS NEAR THE PULLEYS, BELTS OR FAN. DO NOT WEAR LOOSE CLOTHING.

6. Start the engine and operate at 2400 rpm. Within ten minutes the air temperature (indicated on the dial thermometer) should be up to 88° C (190° F). Fan drive **engagement** should start to occur at/between:
   - 3.7L Automatic - 93° C - 99°C (200° F - 210° F)
   - 3.7L Manual/4.7L Automatic - 85° - 91° C (185° - 195° F)
   - 4.7L Manual - 74° - 79° C (165° - 175° F)
   - 5.7L Automatic Standard Cool - 94° C - 99°C (201° F - 211° F)
   - 5.7L Manual - 93° C - 100°C (199° F - 212° F)
   - 5.7L Heavy Duty Snowplow - 76° C - 83°C (169° F - 181° F)
   - Engagement is distinguishable by a definite **increase** in fan flow noise (roaring). The timing light also will indicate an increase in the speed of the fan.
7. When viscous drive engagement is verified, remove the plastic sheet. Fan drive **disengagement** should start to occur at or between:
   - 3.7L Automatic - 76°C - 81°C (168° F - 178° F)
   - 3.7L Manual/4.7L Auto/ 5.9L - 67°C - 73°C (153° F - 163° F)
   - 4.7L Manual - 56°C - 62°C (133° F - 143° F)
   - 5.7L Automatic Standard Cool - 69° C - 74°C (156° F - 166° F)
   - 5.7L Manual - 71° C - 76°C (160° F - 170° F)
   - 5.7L Heavy Duty Snowplow - 55° C - 60°C (168° F - 178° F) A definite **decrease** of fan flow noise (roaring) should be noticed. If not, replace the defective viscous fan drive unit.

CAUTION: Some engines equipped with serpentine drive belts have reverse rotating fans and viscous fan drives. Installation of the wrong fan or viscous fan drive can result in engine overheating.

CAUTION: If the viscous fan drive is replaced because of mechanical damage, the cooling fan blades should also be inspected. Inspect for fatigue cracks, loose blades, or loose rivets that could have resulted from excessive vibration. Replace fan blade assembly if any of these conditions are found. Also inspect water pump bearing and shaft assembly for any related damage due to a viscous fan drive malfunction.

ELECTRONICALLY CONTROLLED VISCOUS FAN DRIVE - 5.9L DIESEL

NOISE

NOTE: It is normal for fan noise to be louder (roaring) when:

- Fan duty cycle high. This may occur when ambient (outside air temperature) is very high.
- Engine loads and temperatures are high such as when towing a trailer.
- Operating conditions where transmission temperatures may be high
- Cool silicone fluid within the fan drive unit is being redistributed back to its normal disengaged (warm) position. This can occur during the first 15 seconds to one minute after engine start-up on a cold engine.

LEAKS

Viscous fan drive operation is not affected by small oil stains near the drive bearing. If leakage appears excessive, replace the fan drive unit.

ELECTRONICALLY CONTROLLED VISCOUS DRIVE – 5.9L DIESEL

If the fan assembly does not free-wheel and a metallic grinding sound exists, replace the electronically controlled fan drive (Refer to 7 - COOLING/ENGINE/RADIATOR FAN - REMOVAL).

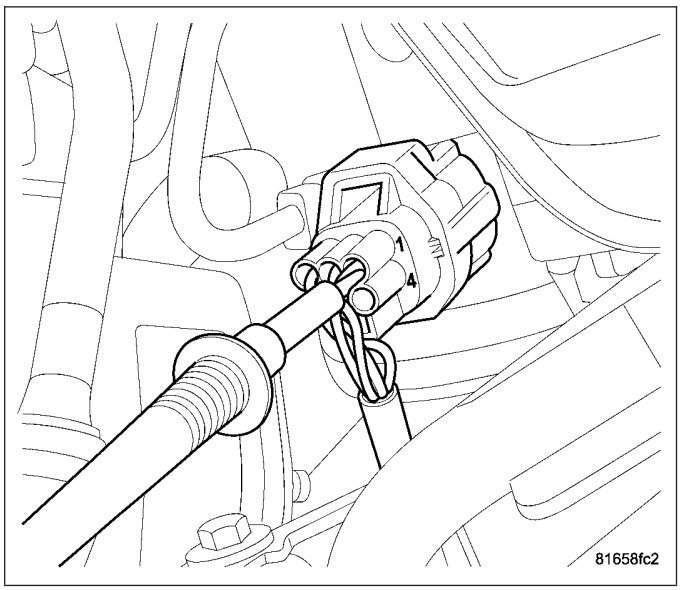

NOTE: The following test may take up to 15 minutes to perform.

The engine should be at normal operating temperature.

1. Set the parking brake and verify the transmission is in park or neutral.
2. Set air conditioner (if equipped) and blower fan to OFF.
3. Start and allow engine to reach normal operating temperatures.
4. Stop engine, connect the scan tool and select appropriate model year and engine option.
5. Check for and correct existing DTC's
6. Using Tool 6801, backprobe pin 1 of the electronically controlled viscous fan drive connector, with the harness connected located at the lower fan shroud to battery ground.

NOTE: The fan drive control coil is energized to 12 volts at this time.

WARNING: A spark may occur when connecting pin to ground. Be sure that no combustible material is in the area.

7. Using the scan tool, verify that DTC 0480 set. If it is not set, verify that a good ground is available.
8. Start the engine.
9. Actuate engine speed to 2000 RPM..
10. Go to the SENSOR screen and observe the fan speed.
11. Run the engine at 2000 RPM until the fan speed increases to 1850 RPM or more for 30 seconds.

NOTE: Fan RPM may ramp up slowly.

NOTE: It maybe take 15 minutes before fan speed increases.

12. The fan speed should be in accordance to the table below.
13. If fan speed does not increase, make sure that the jumper wire has a good connection. If so replace the electronically control viscous fan drive.

ELECTRONICALLY CONTROLLED VISCOUS FAN DRIVE SPEEDS	
ENGINE RPM	**FAN RPM** (Min)
1000	950
1500	1420
2000	1850
2500	2230

14. If the fan speed does increase and there is still a concern, refer to the appropriate Engine Electrical Diagnosis Section to diagnosis the electronically controlled viscous fan drive control circuit.

CAUTION: If the viscous fan drive is replaced because of mechanical damage, the cooling fan blades should also be inspected. Inspect for fatigue cracks or chips that could result in excessive vibration. Replace fan blade assembly if any of these conditions are found.

REMOVAL

3.7L/4.7L/5.7L ENGINE

1. **Do Not** attempt to remove the fan/viscous fan drive assembly from the vehicle at this time.

CAUTION: If the viscous fan drive is replaced because of mechanical damage, the cooling fan blades should also be inspected. Inspect for fatigue cracks, loose blades, or loose rivets that could have resulted from excessive vibration. Replace fan blade assembly if any of these conditions are found. Also inspect water pump bearing and shaft assembly for any related damage due to a viscous fan drive malfunction.

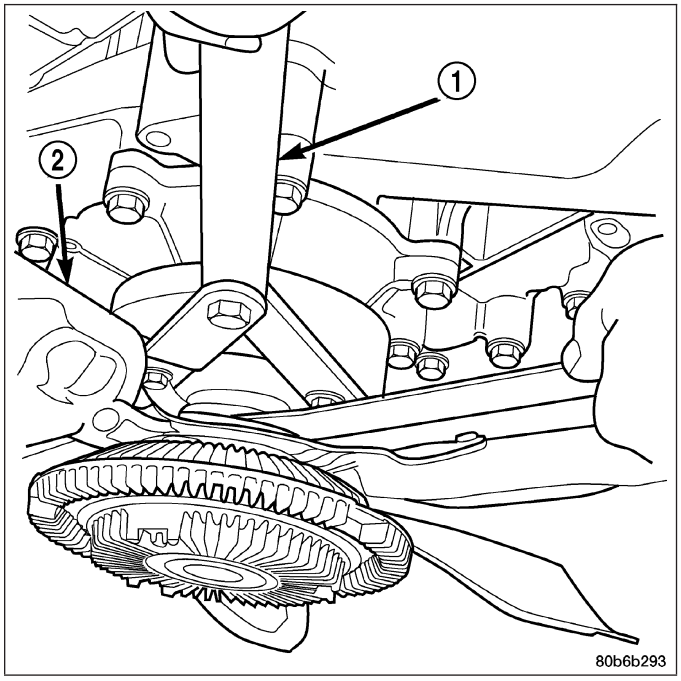

2. Disconnect negative battery cable from battery.
3. Remove coolant reserve/overflow container from fan shroud and lay aside. **Do Not** disconnect the hoses or drain coolant from the container.
4. Using Special Tool 6958, remove the fan blade/viscous fan drive assembly from the water pump by turning the mounting nut counterclockwise as viewed from the front. Threads on the viscous fan drive are **RIGHT-HAND.**.
5. **Do Not** unbolt the fan blade assembly from viscous fan drive at this time.
6. Remove the fan shroud-to-radiator mounting bolts.
7. Pull the lower shroud mounts out of the radiator tank clips.
8. Remove the fan shroud and fan blade/viscous fan drive assembly as a complete unit from vehicle.
9. After removing the fan blade/viscous fan drive assembly, **do not** place the viscous fan drive in a horizontal position. If stored horizontally, silicone fluid in the viscous fan drive could drain into its bearing assembly and contaminate lubricant.

CAUTION: Do not remove water pump pulley-to-water pump bolts. This pulley is under spring tension.

10. Remove four bolts securing fan blade assembly to viscous fan drive.

CAUTION: Some engines equipped with serpentine drive belts have reverse rotating fans and viscous fan drives. Installation of the wrong fan or viscous fan drive can result in engine overheating.

5.9L DIESEL ENGINE

CAUTION: The electronically controlled viscous fan drive is vibration and impact sensitive, especially at the electrical connectors. Do not drop the unit.

CAUTION: If the electronically controlled viscous fan drive is replaced because of mechanical damage, the cooling fan blades should also be inspected. Inspect for fatigue cracks, or chipped blades that could have resulted from excessive vibration. Replace fan blade assembly if any of these conditions are found. Also inspect wiring harness and connectors for damage.

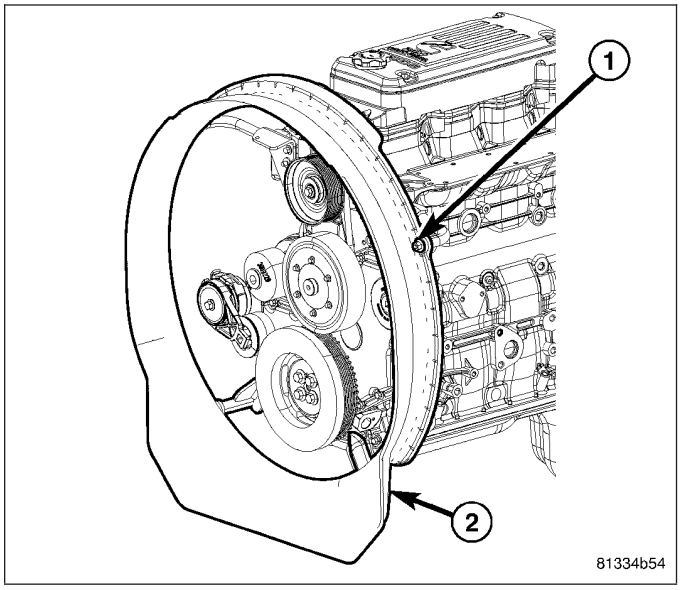

1. Disconnect the battery negative cables.
2. Remove fan shroud-to-engine bracket nuts.

CAUTION: Do not remove the fan pulley bolts. This pulley is under spring tension.

3. Disconnect electronically controlled fan clutch connector at lower fan shroud bracket.
4. Remove fan drive wire harness-to-lower fan shroud bracket mounting bolt.
5. Remove fan drive wire harness support from fan shroud.
6. The electronically controlled viscous fan drive/fan blade assembly is attached (threaded) to the fan pulley shaft. Remove the fan blade/fan drive assembly from fan pulley by turning the mounting nut counterclockwise (as viewed from front). Threads on the viscous fan drive are **RIGHT-HAND.** A 36 mm fan wrench can be used. Place a bar or screwdriver between the fan pulley bolts to prevent pulley from rotating.

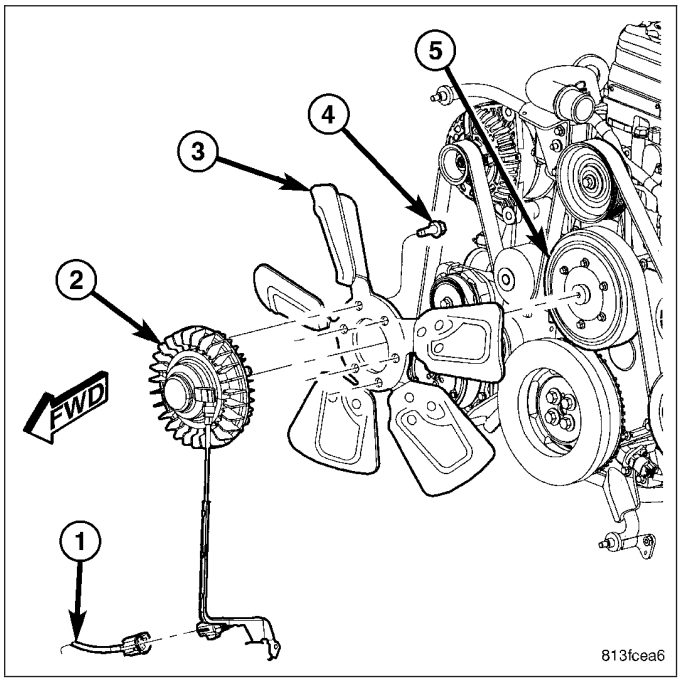

NOTE: It may be necessary to loosen the top two fan shroud brackets. Removal of the engine mounted fan shroud brackets is not necessary unless removing or installing the engine.

7. Collapse fan shroud toward front of vehicle and remove fan drive/fan blade and fan shroud as an assembly.
8. Remove the six fan blade-to-viscous fan drive mounting bolts.
9. Inspect the fan for cracked, chipped or damaged fan blades.

INSTALLATION

3.7L/4.7L/5.7L ENGINE

NOTE: Viscous Fan Drive Fluid Pump Out Requirement: After installing a new viscous fan drive, bring the engine speed up to approximately 2000 rpm and hold for approximately two minutes. This will ensure proper fluid distribution within the drive.

1. Install fan blade assembly to the viscous fan drive. Tighten the bolts to 24 N·m (18 ft. lbs.) torque.
2. Position the fan shroud and the fan blade/viscous fan drive assembly to the vehicle as a complete unit.
3. Install the fan shroud.
4. Using Special Tool 6958, install the fan blade/viscous fan drive assembly to the water pump shaft. Tighten mounting nut to 50 N·m (37 ft. lbs.).
5. Install the coolant reserve/overflow container to the fan shroud.
6. Connect the negative battery cable.

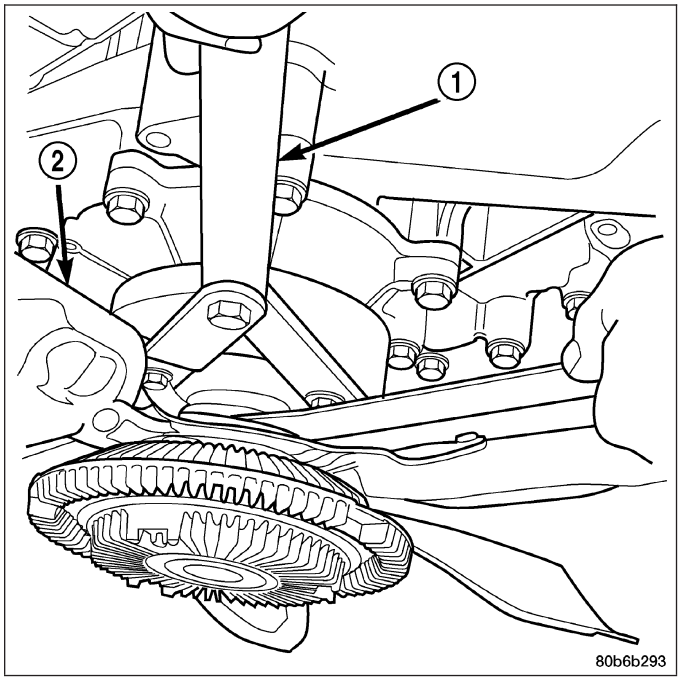

5.9L DIESEL ENGINE

NOTE: Viscous Fan Drive Fluid Pump Out Requirement: After installing a new viscous fan drive, bring the engine speed up to approximately 2000 rpm and hold for approximately two minutes. This will ensure proper fluid distribution within the drive.

1. Install fan blade assembly to electrically controlled viscous fan drive. Tighten mounting bolts to 24 N·m (18 ft. lbs.) torque.

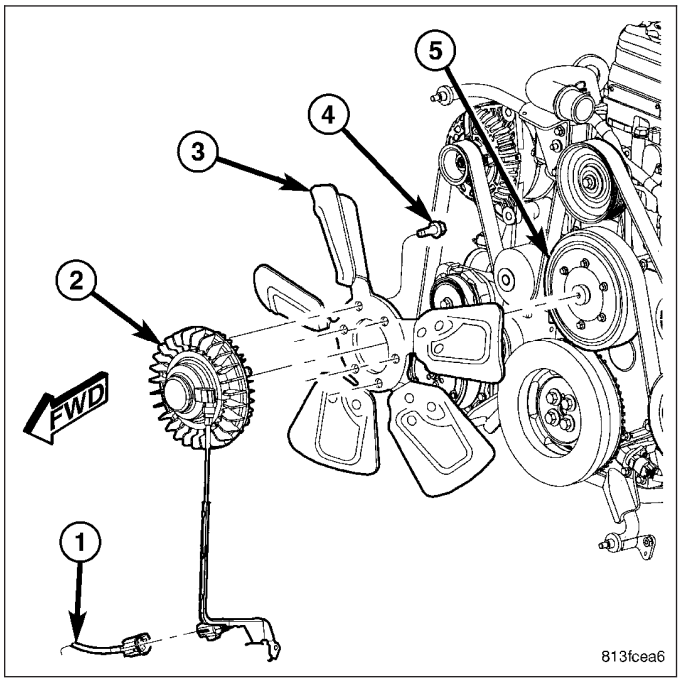

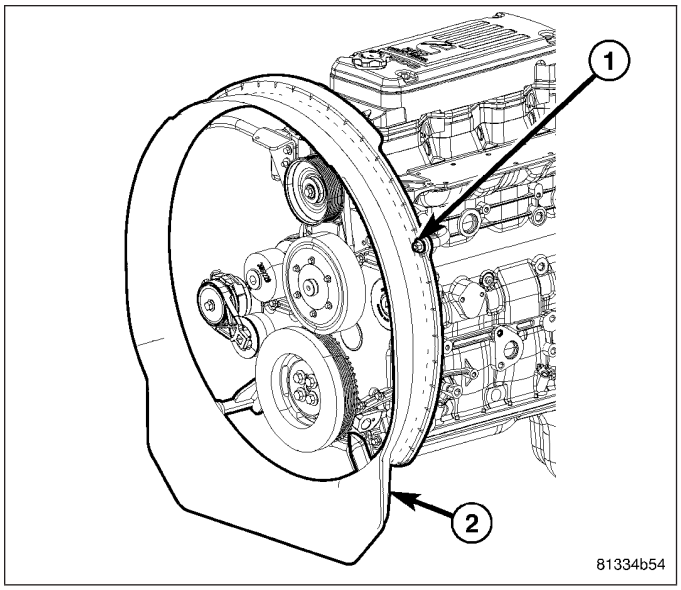

2. Loosen both upper engine mounted fan shroud brackets.
3. Make sure lower engine mounted fan shroud bracket nuts are tightened to 24 N·m (18 ft. lbs.).
4. Position fan/fan drive assembly inside fan shroud and lower into position.
5. Install the viscous fan drive assembly onto fan pulley hub shaft. Tighten mounting nut to 115 N·m (85 ft. lbs.) torque.
6. Install fan drive wir harness support to fan shroud.
7. Install the fan drive wiring harness bracket onto the lower shroud bracket. Tighten nut to 24 N·m (18 ft. lbs.).
8. Connect fan drive wire harness.
9. Install fan shroud to upper engine fan shroud brackets. Tighten nut finger tight.
10. Tighten upper engine fan shroud bracket bolts to 24 N·m (18 ft. lbs).
11. Tighten four fan shroud bracket nuts to 24 N·m (18 ft. lbs.).
12. Make sure of fan tip clearance all the way around inside of fan shroud.
13. Connect the battery negative cables.

RADIATOR

DESCRIPTION

The radiator is a aluminum cross-flow design with horizontal tubes through the radiator core and vertical plastic side tanks.

This radiator does not contain an internal transmission oil cooler.

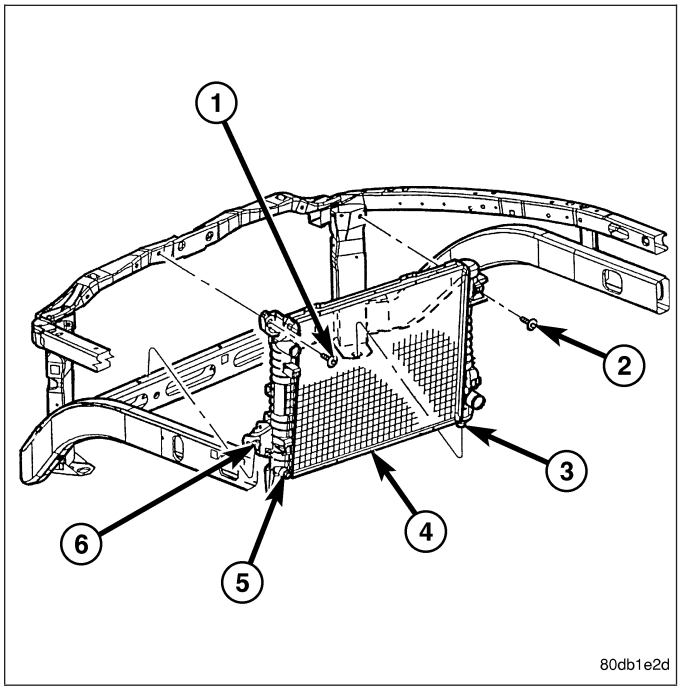

OPERATION

The radiator supplies sufficient heat transfer using the cooling fins interlaced between the horizontal tubes in the radiator core to cool the engine.

DIAGNOSIS AND TESTING

RADIATOR COOLANT FLOW

Use the following procedure to determine if coolant is flowing through the cooling system.

1. Idle engine until operating temperature is reached. If the upper radiator hose is warm to the touch, the thermostat is opening and coolant is flowing to the radiator.

WARNING: HOT, PRESSURIZED COOLANT CAN CAUSE INJURY BY SCALDING. USING A RAG TO COVER THE RADIATOR PRESSURE CAP, OPEN RADIATOR CAP SLOWLY TO THE FIRST STOP. THIS WILL ALLOW ANY BUILT-UP PRESSURE TO VENT TO THE RESERVE/OVERFLOW TANK. AFTER PRESSURE BUILD-UP HAS BEEN RELEASED, REMOVE CAP FROM FILLER NECK.

2. Drain a small amount of coolant from the radiator until the ends of the radiator tubes are visible through the filler neck. Idle the engine at normal operating temperature. If coolant is flowing past the exposed tubes, the coolant is circulating.

REMOVAL

3.7L/4.7L/5.7L ENGINE

1. Disconnect battery negative cables.

WARNING: DO NOT REMOVE THE CYLINDER BLOCK DRAIN PLUGS OR LOOSEN THE RADIATOR DRAINCOCK WITH THE SYSTEM HOT AND UNDER PRESSURE. SERIOUS BURNS FROM THE COOLANT CAN OCCUR.

2. Drain the cooling system (Refer to 7 - COOLING - STANDARD PROCEDURE).

WARNING: CONSTANT TENSION HOSE CLAMPS ARE USED ON MOST COOLING SYSTEM HOSES. WHEN REMOVING OR INSTALLING, USE ONLY TOOLS DESIGNED FOR SERVICING THIS TYPE OF CLAMP. ALWAYS WEAR SAFETY GLASSES WHEN SERVICING CONSTANT TENSION CLAMPS.

CAUTION: A number or letter is stamped into the tongue of constant tension clamps. If replacement is necessary, use only an original equipment clamp with a matching number or letter and the correct width.

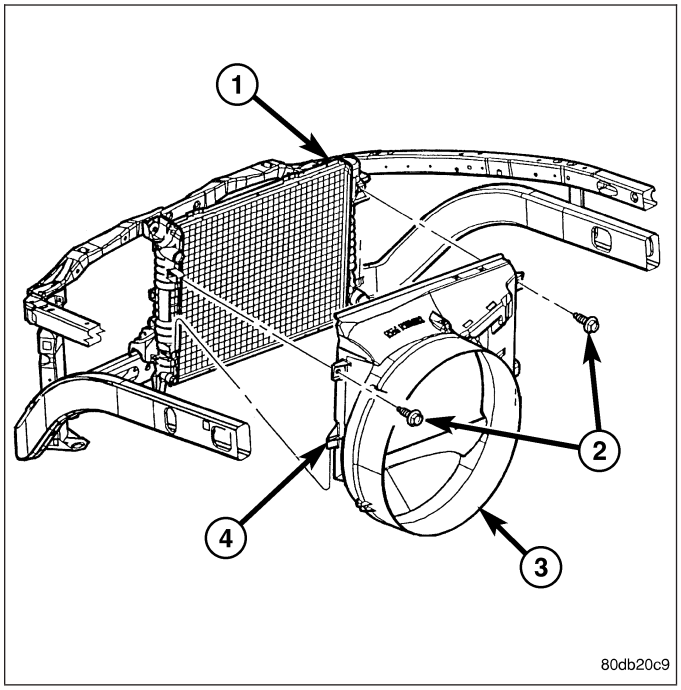

3. Remove the hose clamps and hoses from radiator.
4. Remove the coolant reserve/overflow tank hose from the radiator filler neck.
5. Remove the coolant reserve/overflow tank from the fan shroud (pull straight up). The tank slips into slots on the fan shroud.
6. Unclip the power steering hoses from the fan shroud.
7. Disconnect the electrical connectors at the windshield washer reservoir tank and remove the tank.
8. Remove the fan shroud mounting bolts and pull up and out of the radiator tank clips. Position shroud rearward over the fan blades towards engine.
9. Disconnect the transmission cooler lines from the transmission cooler, then plug the transmission lines and cooler to prevent leakage.
10. Disconnect the power steering lines from the power steering cooler, then plug the power steering lines and cooler to prevent leakage.
11. Remove the two radiator upper mounting bolts.

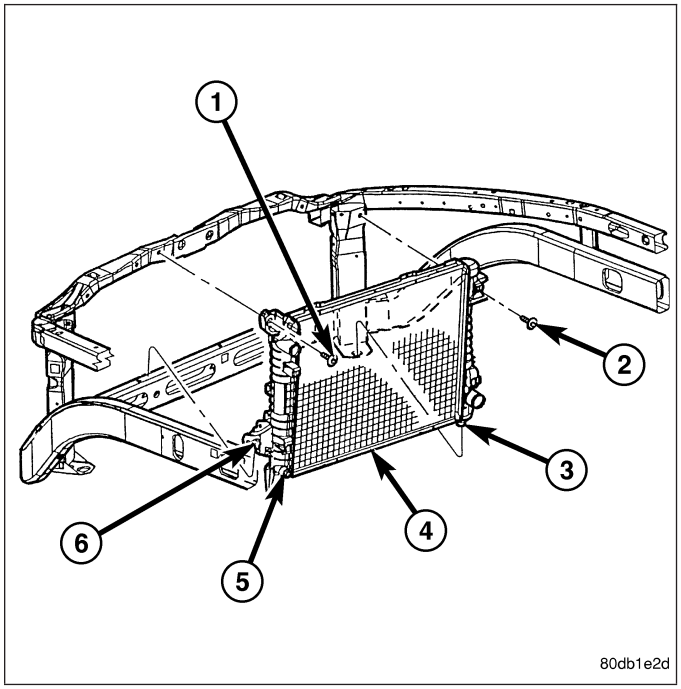

12. Lift the radiator straight up and out of the engine compartment. Take care not to damage cooling fins or tubes on the radiator and oil coolers when removing.

NOTE: The radiator is equipped with one alignment dowel on the bottom of the outlet tank and one retaining bracket on the front side of the inlet tank. Both features have rubber insulators attached to them that must be present. The alignment dowel fits into a hole at the bottom of the front end sheet metal vertical support post and the support bracket rests on top of the lower radiator closure tube.

5.9L DIESEL ENGINE

1. Disconnect both battery negative cables.

WARNING: DO NOT REMOVE THE CYLINDER BLOCK DRAIN PLUGS OR LOOSEN THE RADIATOR DRAINCOCK WITH THE SYSTEM HOT AND UNDER PRESSURE. SERIOUS BURNS FROM COOLANT CAN OCCUR.

2. Drain the cooling system (Refer to 7 - COOLING - STANDARD PROCEDURE).

WARNING: CONSTANT TENSION HOSE CLAMPS ARE USED ON MOST COOLING SYSTEM HOSES. WHEN REMOVING OR INSTALLING, USE ONLY TOOLS DESIGNED FOR SERVICING THIS TYPE OF CLAMP, SUCH AS SPECIAL CLAMP TOOL (NUMBER 6094). ALWAYS WEAR SAFETY GLASSES WHEN SERVICING CONSTANT TENSION CLAMPS.

CAUTION: A number or letter is stamped into the tongue of constant tension clamps. If replacement is necessary, use only an original equipment clamp with a matching number or letter.

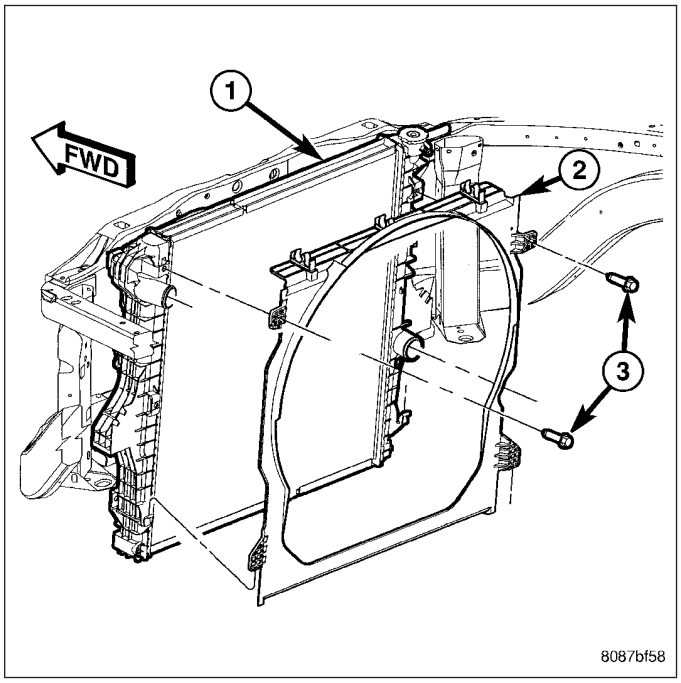

3. Remove air box and turbocharger inlet tube.
4. Remove coolant tank hose, washer bottle hose and the positive battery cable from the fastening clips located on top of the radiator.
5. Remove hose clamps and hoses from radiator.
6. Remove fan shroud mounting nuts from mounting brackets.
7. Pull shroud toward front of vehicle to clear mounting brackets
8. Turn shroud slightly and push toward engine to gain clearance for radiator.
9. Remove the power steering cooler mounting bolts and position the power steering cooler out of the way.
10. Disconnect the transmission cooler lines at the transmission cooler. The transmission cooler will remain on the radiator and can be removed as an assembly.
11. Remove the two radiator upper mounting bolts.
12. Tilt radiator toward front of vehicle and lift out of engine compartment. The bottom of the radiator is equipped with two alignment dowels that fit into holes in the lower radiator support panel. Rubber biscuits (insulators) are installed to these dowels. Take care not to damage cooling fins or tubes on the radiator and air conditioning condenser or the electronic viscous fan connector when removing.

8.3L ENGINE

WARNING: CONSTANT TENSION HOSE CLAMPS ARE USED ON MOST COOLING SYSTEM HOSES. WHEN REMOVING OR INSTALLING, USE ONLY TOOLS DESIGNED FOR SERVICING THIS TYPE OF CLAMP. ALWAYS WEAR SAFETY GLASSES WHEN SERVICING CONSTANT TENSION CLAMPS.

1. Disconnect both battery negative cables.
2. Drain the cooling system (Refer to 7 - COOLING - STANDARD PROCEDURE).
3. Remove radiator fan (Refer to 7 - COOLING/ENGINE/RADIATOR FAN - REMOVAL).
4. Remove the power steering cooler mounting bolts (1) and pushpins (5). Position the power steering cooler out of the way.

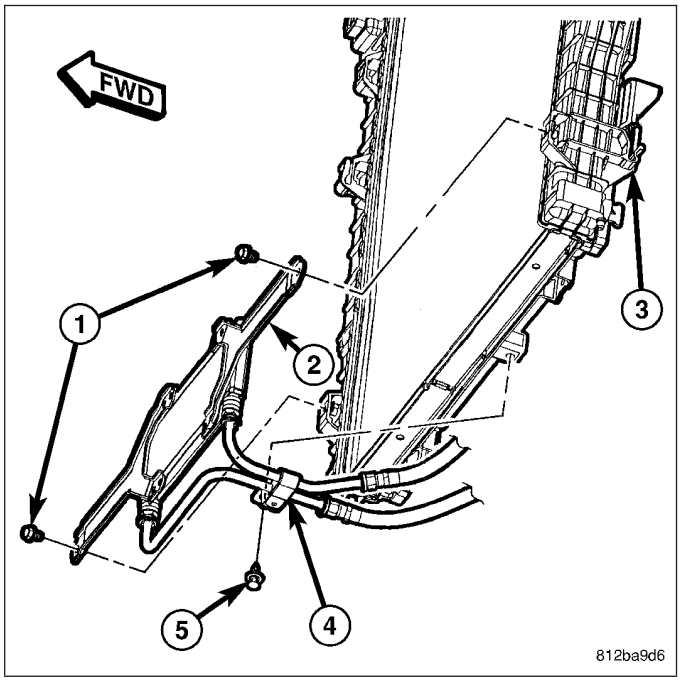

5. Lower vehicle.
6. Remove the two radiator upper mounting bolts.
7. Lift radiator straight up and out of engine compartment. The bottom of the radiator is equipped with two alignment dowels that fit into holes in the lower radiator support panel. Rubber biscuits (insulators) are installed to these dowels. Take care not to damage cooling fins or tubes on the radiator and air conditioning condenser when removing.

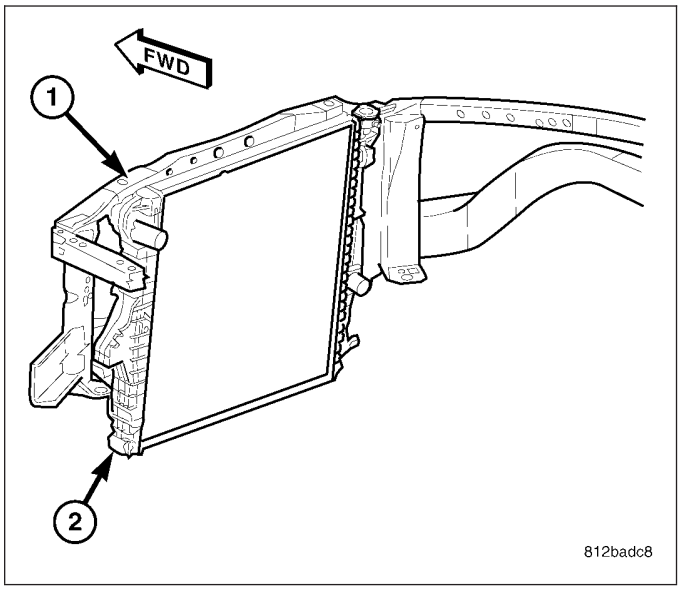

CLEANING

Clean radiator fins are necessary for good heat transfer. The radiator and oil cooler fins should be cleaned when an accumulation of debris has occurred. With the engine cold, apply cold water and compressed air to the back (engine side) of the radiator to flush the radiator and/or oil coolers of debris.

INSPECTION

Inspect the radiator side tanks for cracks, and broken or missing fittings. Inspect the joint where the tanks seam up to the radiator core for signs of leakage and/or deteriorating seals.

Inspect radiator core for corroded, bent or missing cooling fins. Inspect the core for bent or damaged cooling tubes.

INSTALLATION

3.7L/4.7L/5.7L ENGINE

1. Position the fan shroud over the fan blades rearward towards engine.
2. Install the rubber insulators to the lower radiator mounting features (alignment dowel and support bracket at the lower part of the radiator).
3. Lower the radiator into position while guiding the alignment dowel into the vertical post bracket. Position and seat the lower radiator support bracket onto the lower radiator closure tube.
4. Install the upper radiator mounting bolts. Tighten bolts to 10 N·m (90 in. lbs.).
5. Connect the lower radiator hose and install the clamp in the proper position.
6. Connect the power steering hoses to the power steering oil cooler and install the clamps.
7. Connect the transmission oil cooler lines to the transmission oil cooler and install the secondary latches.

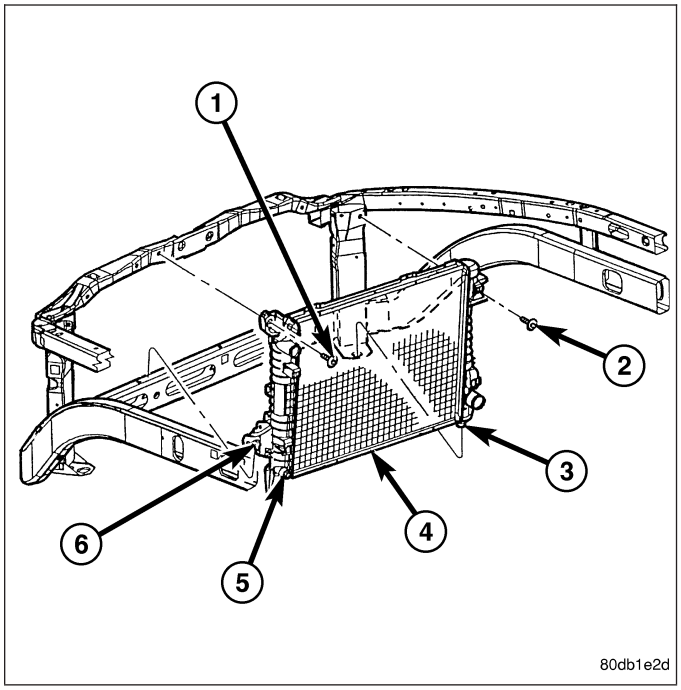

8. Position the fan shroud into the mounting clips on the radiator tanks and secure with bolts. Tighten the bolts to 8 N·m (75 in. lbs.).
9. Secure the power steering hoses into the clip on the lower fan shroud.
10. Install the windshield washer reservoir tank and connect the hose and electrical connector.
11. Install coolant reserve/overflow container hose(s) to radiator filler neck and secure properly with clamps.
12. Install coolant reserve/overflow container or degas container to fan shroud and tighten the bolts to 8 N·m (75 in. lbs.).
13. Connect upper radiator hose and install clamp.
14. Install battery negative cable.
15. Fill cooling system with coolant (Refer to 7 - COOLING - STANDARD PROCEDURE).
16. Operate the engine until it reaches normal operating temperature. Check cooling system fluid levels.

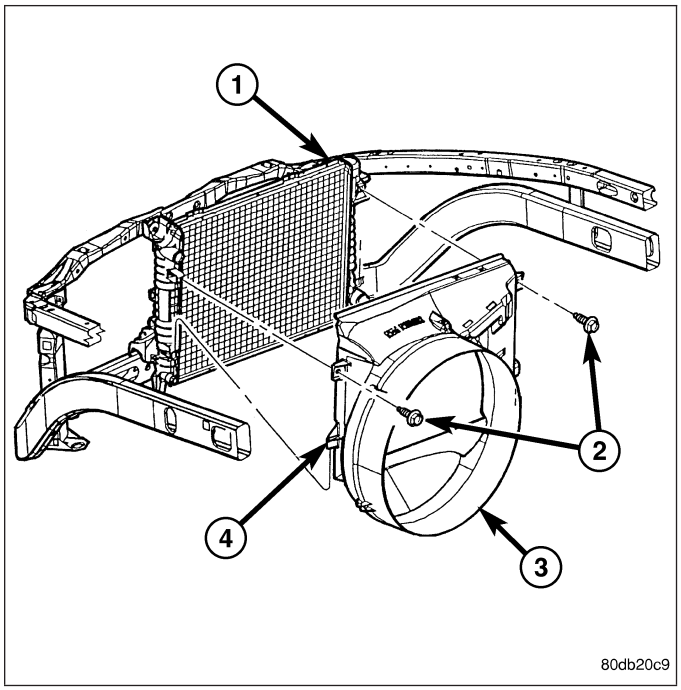

5.9L DIESEL ENGINE

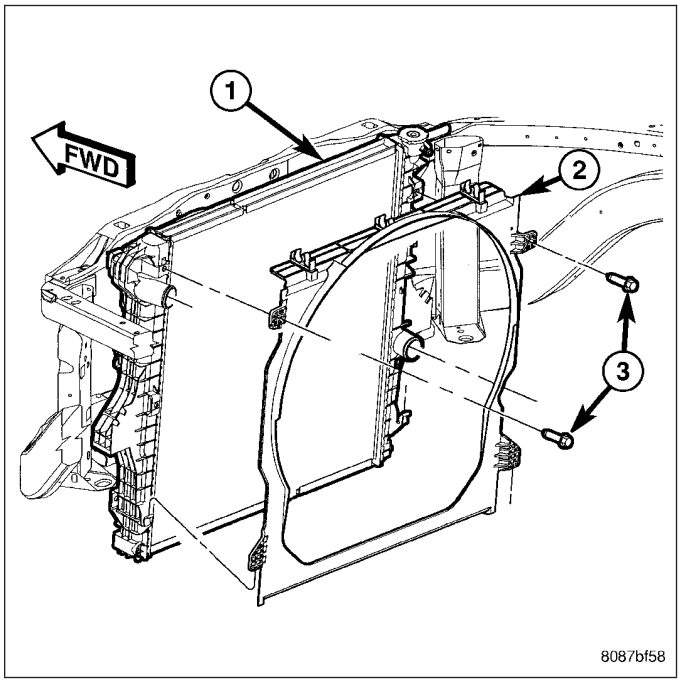

1. Install rubber insulators to alignment dowels at lower part of radiator.
2. Lower the radiator into position while guiding the two alignment dowels into lower radiator support. Different alignment holes are provided in the lower radiator support for each engine application.
3. Install two upper radiator mounting bolts. Tighten bolts to 12 N·m (105 in. lbs.) torque.
4. Connect both radiator hoses and install hose clamps.
5. Connect transmission cooler lines to transmission cooler. Inspect quick connect fittings for debris and install until an audible “click” is heard. Tug on lines to verify connection.
6. Position power steering cooler on the radiator and tighten nuts to 10 N·m (90 in. lbs.)
7. Position fan shroud on brackets.
8. Install fan shroud mounting nut. Tighten nut to 24 N·m (18 ft. lbs.).
9. Install the coolant recovery container (Refer to 7 - COOLING/ENGINE/COOLANT RECOVERY CONTAINER - INSTALLATION).
10. Position coolant recovery tank hose, washer bottle hose and the positive battery cable into the clips located on the top of the radiator.
11. Install air box and turbocharger inlet hose. Tighten clamps to 4 N·m (35 in. lbs.).
12. Position heater controls to **full heat** position.
13. Fill cooling system with coolant (Refer to 7 - COOLING - STANDARD PROCEDURE).
14. Operate engine until it reaches normal temperature. Check cooling system and automatic transmission (if equipped) fluid levels.

8.3L ENGINE

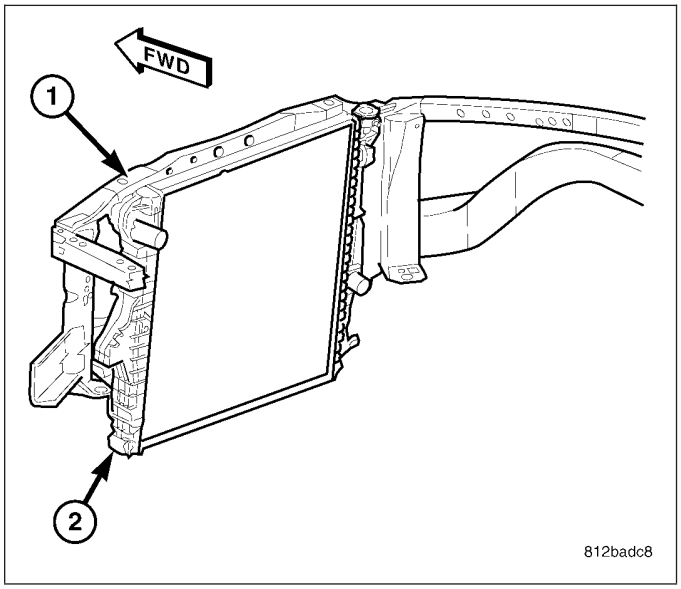

1. Install rubber insulators to alignment dowels at lower part of radiator.
2. Lower the radiator into position while guiding the two alignment dowels into lower radiator support. Different alignment holes are provided in the lower radiator support for each engine application.
3. Install two upper radiator mounting bolts. Tighten bolts to 12 N·m (105 in. lbs.) torque.
4. Install radiator fan and shroud assembly (Refer to 7 - COOLING/ENGINE/RADIATOR FAN - INSTALLATION).
5. Install the coolant recovery container (Refer to 7 - COOLING/ENGINE/COOLANT RECOVERY CONTAINER - INSTALLATION).
6. Install upper radiator hose.
7. Raise vehicle.
8. Install pressure line to radiator fan motor. Tighten fitting to 47 N·m (35 ft. lbs.).
9. Install return line to radiator fan motor. Tighten fitting to 29 N·m (21 ft. lbs.)
10. Install lower radiator hoses.

11. Position power steering cooler on the radiator and tighten nuts to 10 N·m (90 in. lbs.)
12. Install cushion clamp (4) and pushpin (5).
13. Lower vehicle.
14. Install air box and inlet hose. Tighten clamps to 4 N·m (35 in. lbs.).
15. Fill cooling system (Refer to 7 - COOLING - STANDARD PROCEDURE).
16. Connect negative battery cable.
17. Fill power steering system (Refer to 19 - STEERING/PUMP/FLUID - STANDARD PROCEDURE).
18. Operate engine until it reaches normal temperature. Check cooling system and automatic transmission (if equipped) fluid levels.

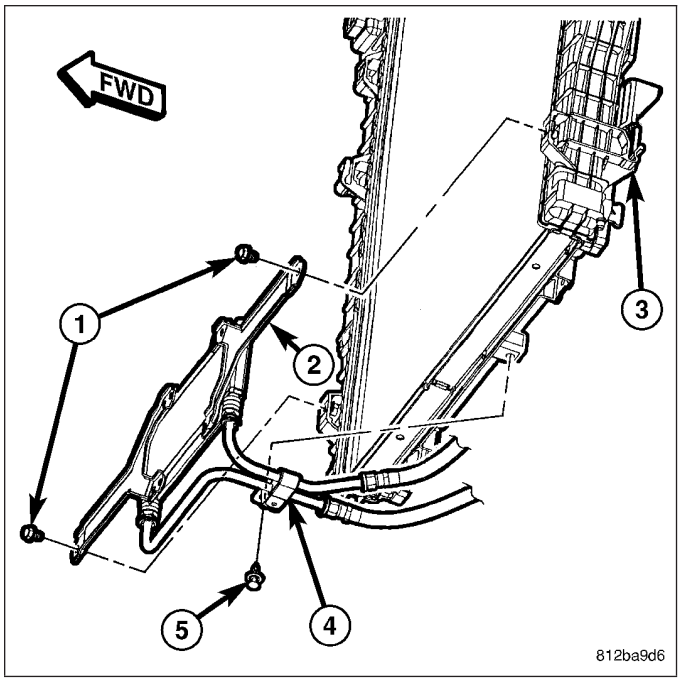

CAP-RADIATOR PRESSURE

DESCRIPTION

All cooling systems are equipped with a pressure cap. For all engines, the pressure cap is located on top of the radiator outlet tank. The cap releases pressure at some point within a range of 97-to-124 kPa (14-to-18 psi). The pressure relief point (in pounds) is engraved on top of the cap

The cooling system will operate at pressures slightly above atmospheric pressure. This results in a higher coolant boiling point allowing increased radiator cooling capacity. The cap contains a spring-loaded pressure relief valve. This valve opens when system pressure reaches the release range of 97-to-124 kPa (14-to-18 psi).

A rubber gasket seals the radiator filler neck. This is done to maintain vacuum during coolant cool-down and to prevent leakage when system is under pressure.

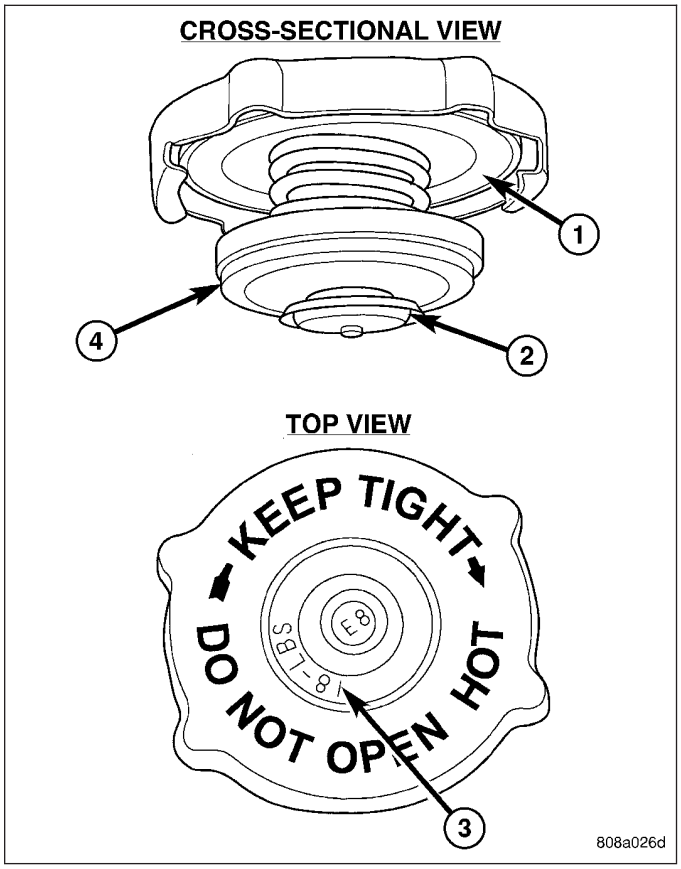

OPERATION

A vent valve in the center of the cap will remain shut as long as the cooling system is pressurized. As the coolant cools, it contracts and creates a vacuum in the cooling system. This causes the vacuum valve to open and coolant in the reserve/overflow container to be drawn through the recovery hose connecting the filler neck and reserve/overflow container. If the vacuum valve is stuck shut, or the recovery hose is kinked, radiator hoses will collapse on cool down.

DIAGNOSIS AND TESTING

RADIATOR CAP-TO-FILLER NECK SEAL

The pressure cap upper gasket (seal) pressure relief can be tested by removing overflow hose from the radiator filler neck tube. Attach the hose of the pressure tester tool 7700 (or equivalent) to the tube. It will be necessary to disconnect hose from its adapter for the filler neck. Pump air into radiator. The pressure cap upper gasket should relieve at 69 to 124kPa (10 to 18 psi) and hold pressure at a minimum of 55 kPa (8 psi).

WARNING: THE WARNING WORDS, ”DO NOT OPEN HOT”, ON RADIATOR PRESSURE CAP, ARE A SAFETY PRECAUTION. WHEN HOT, PRESSURE BUILDS UP IN COOLING SYSTEM. TO PREVENT SCALDING OR INJURY, RADIATOR CAP SHOULD NOT BE REMOVED WHILE SYSTEM IS HOT AND/OR UNDER PRESSURE.

Do not remove the radiator cap at any time **except** for the following purposes:

- Check and adjust antifreeze freeze point.
- Refill the system with new antifreeze.
- Conducting service procedures.
- Checking for vacuum leaks.

WARNING: IF VEHICLE HAS BEEN RUN RECENTLY, WAIT AT LEAST 15 MINUTES BEFORE REMOVING RADIATOR CAP. WITH A RAG, SQUEEZE RADIATOR UPPER HOSE TO CHECK IF SYSTEM IS UNDER PRESSURE. PLACE A RAG OVER CAP AND WITHOUT PUSHING CAP DOWN, ROTATE IT COUNTER-CLOCKWISE TO FIRST STOP. ALLOW FLUID TO ESCAPE THROUGH THE COOLANT RESERVE/OVERFLOW HOSE INTO RESERVE/OVERFLOW TANK. SQUEEZE RADIATOR UPPER HOSE TO DETERMINE WHEN PRESSURE HAS BEEN RELEASED. WHEN COOLANT AND STEAM STOP BEING PUSHED INTO TANK AND SYSTEM PRESSURE DROPS, REMOVE RADIATOR CAP COMPLETELY.

RADIATOR CAP

Remove the cap from the radiator. Be sure that the sealing surfaces are clean. Moisten the rubber gasket with water and install the cap on the pressure tester 7700 or an equivalent.

Operate the tester pump to bring the pressure to 104 kPa (15 psi) on the gauge. If the pressure cap fails to hold pressure of at least 97 kPa (14 psi) replace the cap. Refer to the following **CAUTION**.

The pressure cap may test properly while positioned on tool 7700 (or equivalent). It may not hold pressure or vacuum when installed on the radiator. If so, inspect the radiator filler neck and radiator cap's top gasket for damage. Also inspect for dirt or distortion that may prevent the cap from sealing properly.

CAUTION: Radiator pressure testing tools are very sensitive to small air leaks which will not cause cooling system problems. A pressure cap that does not have a history of coolant loss should not be replaced just because it leaks slowly when tested with this tool. Add water to tool. Turn tool upside down and recheck pressure cap to confirm that cap needs replacement.

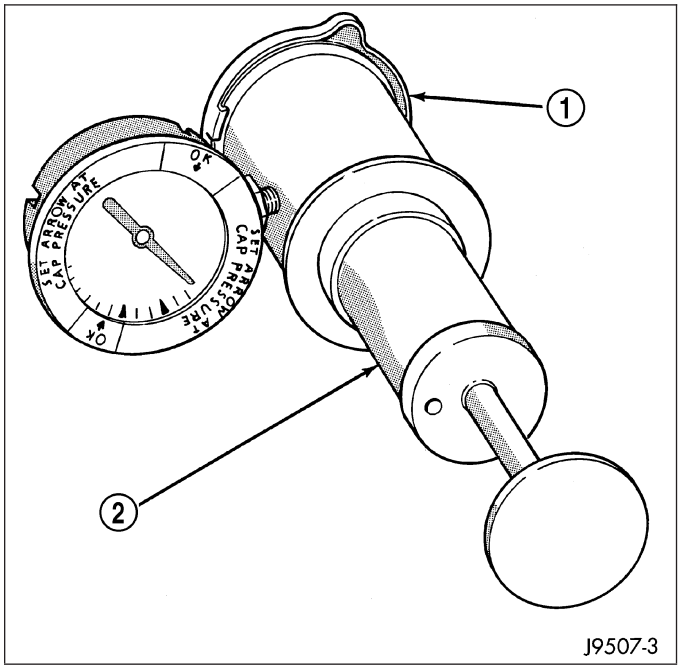

CLEANING

Use only a mild soap and water to clean the radiator cap. Using any type of solvent may cause damage to the seal in the radiator cap.

INSPECTION

Hold cap at eye level, right side up. The vent valve at bottom of cap should closed. A slight downward pull on the vent valve should open it. If the rubber gasket has swollen and prevents vent valve from opening, replace cap.

Hold cap at eye level, upside down. If any light can be seen between vent valve and rubber gasket, replace cap. A replacement cap must be the type designed for a coolant reserve/overflow system with a completely sealed diaphragm spring and a rubber gasket. This gasket is used to seal to radiator filler neck top surface. Use of proper cap will allow coolant return to radiator.

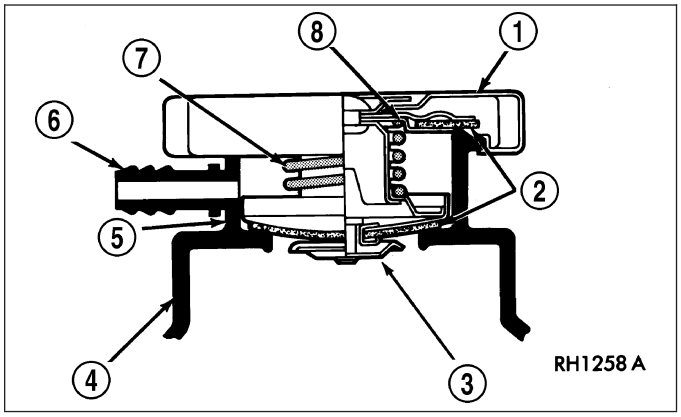

PUMP-WATER

DESCRIPTION

DESCRIPTION

A centrifugal water pump circulates coolant through the water jackets, passages, intake manifold, radiator core, cooling system hoses and heater core. The pump is driven from the engine crankshaft by a single serpentine drive belt.

The water pump impeller is pressed onto the rear of a shaft that rotates in bearings pressed into the housing. The housing has two small holes to allow seepage to escape. The water pump seals are lubricated by the antifreeze in the coolant mixture. No additional lubrication is necessary.

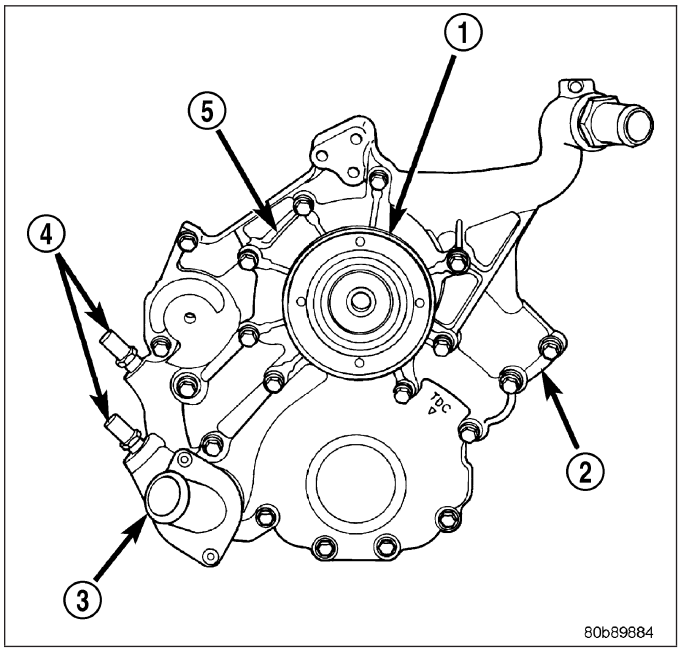

DESCRIPTION - WATER PUMP BYPASS

The 3.7L and 4.7L engine uses an internal water/coolant bypass system. The design uses galleries in the timing chain cover to circulate coolant during engine warm-up preventing the coolant from flowing through the radiator.

OPERATION

OPERATION

A centrifugal water pump circulates coolant through the water jackets, passages, intake manifold, radiator core, cooling system hoses and heater core, this coolant absorbs the heat generated when the engine is running. The pump is driven by the engine crankshaft via a drive belt.

WATER PUMP BYPASS – 3.7L/4.7L

When the thermostat is in the closed position the bypass gallery is not obstructed allowing 100% flow. When the thermostat is in the open position the pill partially covers the bypass hole, reducing the amount of bypass flow. This design allows the coolant to reach operating temperature quickly when cold, while adding extra cooling during normal temperature operation.

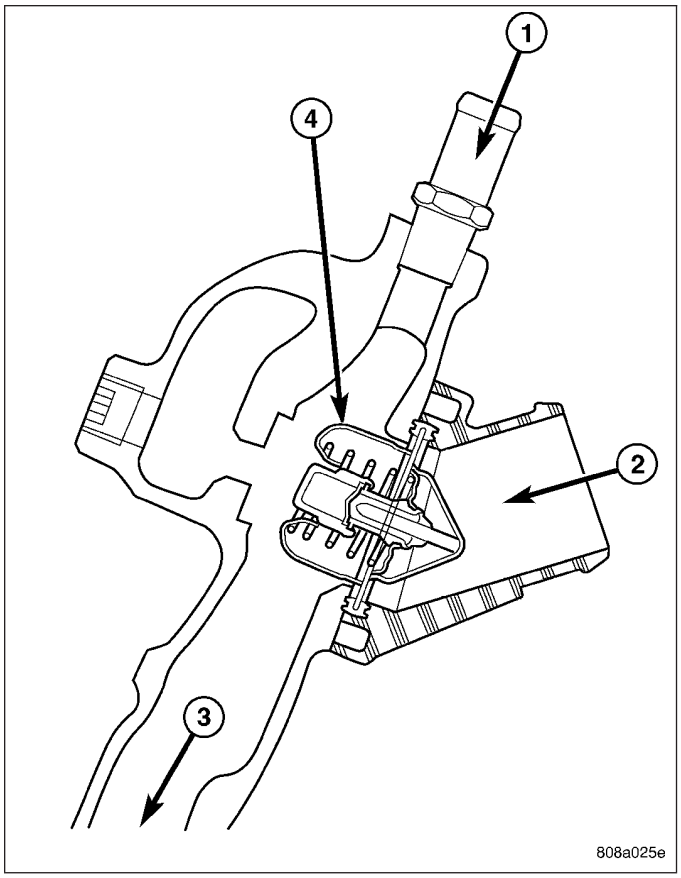

DIAGNOSIS AND TESTING - WATER PUMP

A quick test to determine if pump is working is to check if heater warms properly. A defective water pump will not be able to circulate heated coolant through the long heater hose to the heater core.

REMOVAL

3.7L/4.7L ENGINE

The water pump on 3.7L/4.7L engines is bolted directly to the engine timing chain case cover.

1. Disconnect the negative battery cable.
2. Drain cooling system (Refer to 7 - COOLING - STANDARD PROCEDURE).
3. Remove fan/viscous fan drive assembly from water pump (Refer to 7 - COOLING/ENGINE/FAN DRIVE VISCOUS CLUTCH - REMOVAL). Do not attempt to remove fan/viscous fan drive assembly from vehicle at this time.

WARNING: CONSTANT TENSION HOSE CLAMPS ARE USED ON MOST COOLING SYSTEM HOSES. WHEN REMOVING OR INSTALLING, USE ONLY TOOLS DESIGNED FOR SERVICING THIS TYPE OF CLAMP. ALWAYS WEAR SAFETY GLASSES WHEN SERVICING CONSTANT TENSION CLAMPS.

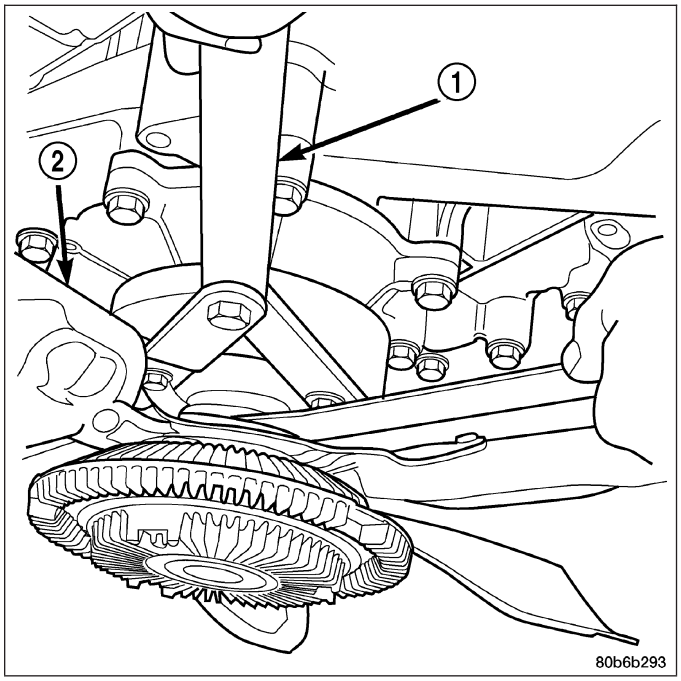

CAUTION: A number or letter is stamped into the tongue of constant tension clamps. If replacement is necessary, use only an original equipment clamp with matching number or letter and width.

4. If the water pump is being replaced, do not unbolt the fan blade assembly from the thermal viscous fan drive.
5. Remove the radiator fan (Refer to 7 - COOLING/ENGINE/RADIATOR FAN - REMOVAL).
6. Remove accessory drive belt (Refer to 7 - COOLING/ACCESSORY DRIVE/DRIVE BELTS - REMOVAL).
7. Remove the lower radiator hose clamp and remove the lower hose at the water pump.
8. Remove the water pump mounting bolts.

CAUTION: Do not pry water pump at timing chain case/cover. The machined surfaces may be damaged resulting in leaks.

9. Remove the water pump and gasket. Discard gasket.

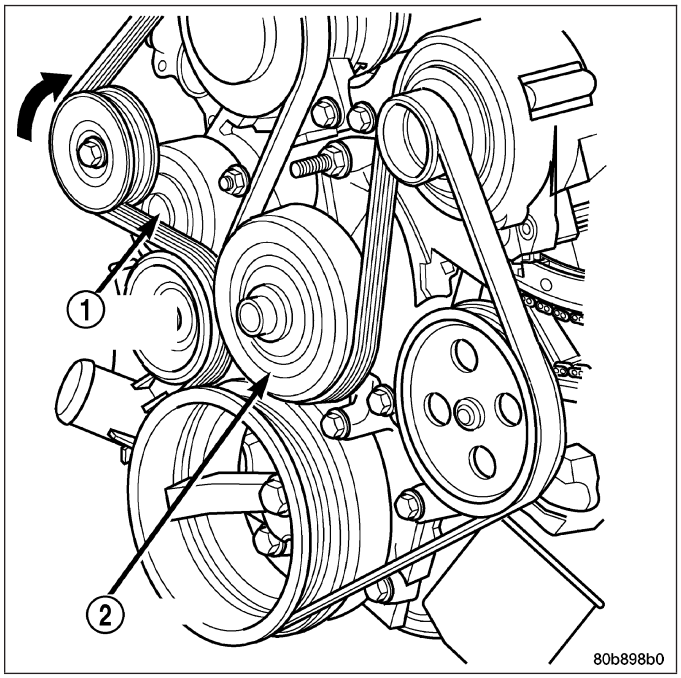

5.7L ENGINE

1. Disconnect negative battery cable.
2. Drain coolant.
3. Remove serpentine belt.
4. Remove fan clutch assembly.
5. Remove coolant fill bottle.
6. Disconnect washer bottle wiring and hose.
7. Remove fan shroud assembly.
8. Remove A/C compressor and generator brace.
9. Remove idler pulleys.
10. Remove belt tensioner assembly.
11. Remove upper and lower radiator hoses.
12. Remove heater hoses.
13. Remove water pump mounting bolts and remove pump.

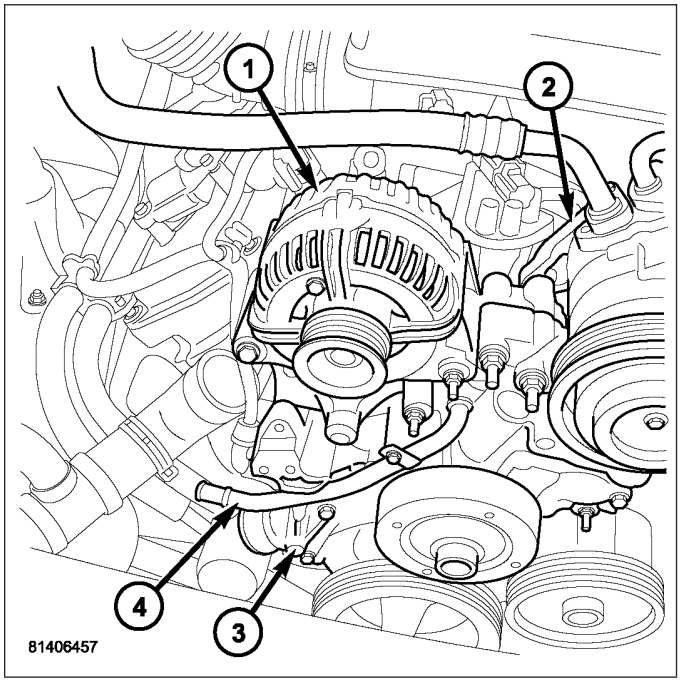

5.9L DIESEL ENGINE

1. Disconnect battery negative cables.
2. Drain cooling system (Refer to 7 - COOLING - STANDARD PROCEDURE).
3. Remove the accessory drive belt (Refer to 7 - COOLING/ACCESSORY DRIVE/DRIVE BELTS - REMOVAL).
4. Remove water pump mounting bolts (3).
5. Clean water pump sealing surface on cylinder block.

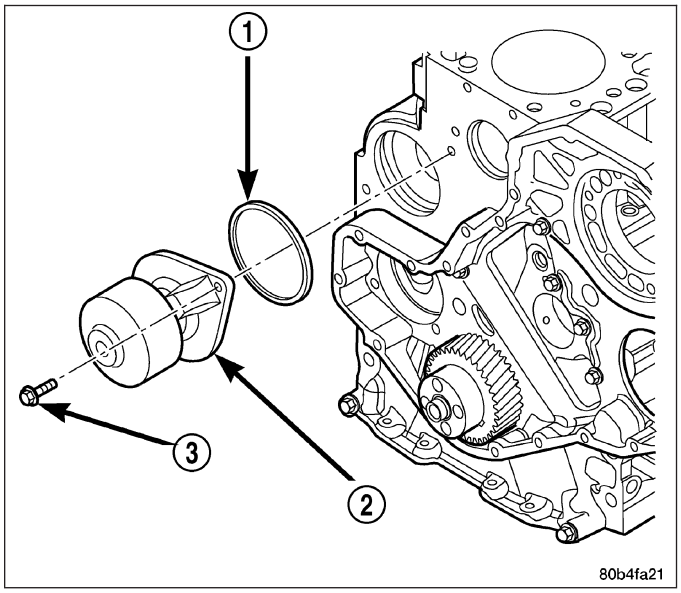

8.3L ENGINE

NOTE:
The water pump on all models can be removed without discharging the air conditioning system (if equipped).
The water pump on all gas powered engines is bolted directly to the engine timing chain case/cover.
On the 8.0L V-10 engine, a rubber o-ring (instead of a gasket) is used as a seal between the water pump and timing chain case/cover.

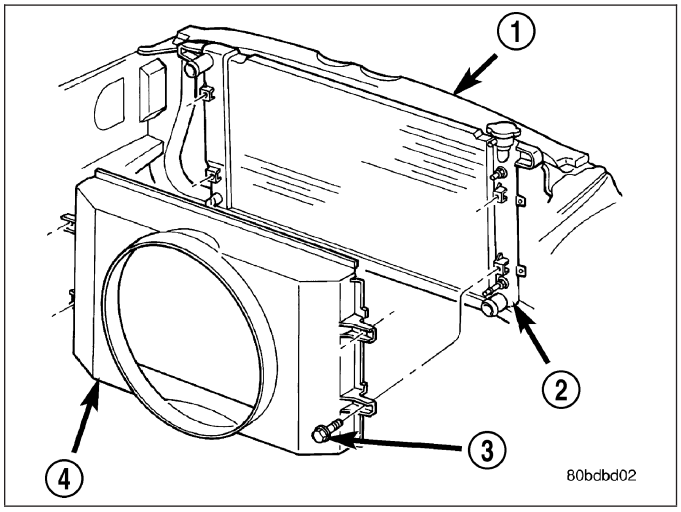

If water pump is replaced because of bearing/shaft damage or leaking shaft seal, the mechanical cooling fan assembly should also be inspected. Inspect for fatigue cracks, loose blades or loose rivets that could have resulted from excessive vibration. Replace fan if any of these conditions are found. Also check condition of the thermal viscous fan drive (Refer to 7 - COOLING/ENGINE/FAN DRIVE VISCOUS CLUTCH - DIAGNOSIS AND TESTING).

1. Disconnect negative battery cable from battery.
2. Drain cooling system (Refer to 7 - COOLING - STANDARD PROCEDURE).

Do not waste reusable coolant. If solution is clean, drain coolant into a clean container for reuse.

3. Remove windshield washer reservoir tank from radiator fan shroud.
4. Remove the four fan shroud mounting bolts at the radiator. Do not attempt to remove shroud from vehicle at this time.

WARNING: CONSTANT TENSION HOSE CLAMPS ARE USED ON MOST COOLING SYSTEM HOSES. WHEN REMOVING OR INSTALLING, USE ONLY TOOLS DESIGNED FOR SERVICING THIS TYPE OF CLAMP, SUCH AS SPECIAL CLAMP TOOL NUMBER 6094. ALWAYS WEAR SAFETY GLASSES WHEN SERVICING CONSTANT TENSION CLAMPS.

CAUTION: A number or letter is stamped into the tongue of constant tension clamps. If replacement is necessary, use only an original equipment clamp with a matching number or letter.

5. Remove radiator upper hose at radiator.
6. Remove accessory drive belt (Refer to 7 - COOLING/ACCESSORY DRIVE/DRIVE BELTS - REMOVAL).
7. Remove the radiator lower hose at water pump.
8. Remove heater hose at water pump fitting.
9. Remove the seven water pump mounting bolts.
10. Loosen the clamp at the water pump end of bypass hose. Slip the bypass hose from the water pump while removing pump from vehicle. Do not remove the clamp from the bypass hose.

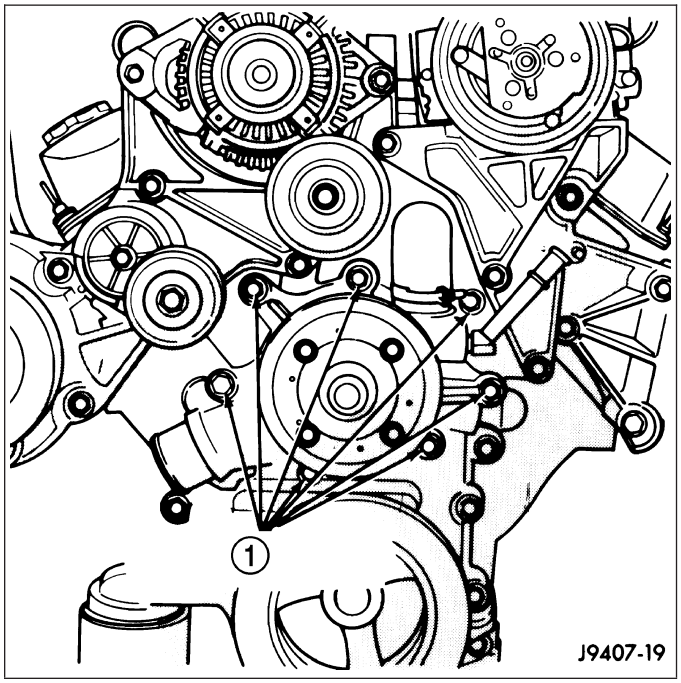

11. Discard the water pump-to-timing chain/case cover o-ring seal.
12. Remove the heater hose fitting from water pump if pump replacement is necessary. Note position (direction) of fitting before removal. Fitting must be re-installed to same position.

CAUTION: Do not pry the water pump at timing chain case/cover. The machined surfaces may be damaged resulting in leaks.

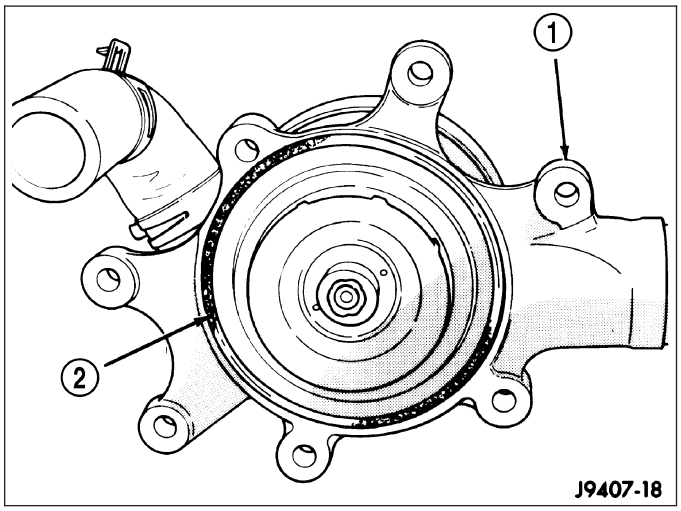

CLEANING

Clean the gasket mating surface. Use caution not to damage the gasket sealing surface.

INSPECTION

Inspect the water pump assembly for cracks in the housing, water leaks from shaft seal, worn bearing or impeller rubbing either the pump body or timing chain case/cover.

INSTALLATION

3.7L/4.7L ENGINE

The water pump on 3.7L/4.7L engine is bolted directly to the engine timing chain case cover.

1. Clean the gasket mating surfaces.
2. Using a new gasket, position water pump and install the mounting bolts.. Tighten the water pump mounting bolts to 58 N·m (43 ft. lbs.).
3. Spin the water pump to be sure that the pump impeller does not rub against the timing chain case/cover.
4. Connect the radiator lower hose to the water pump.

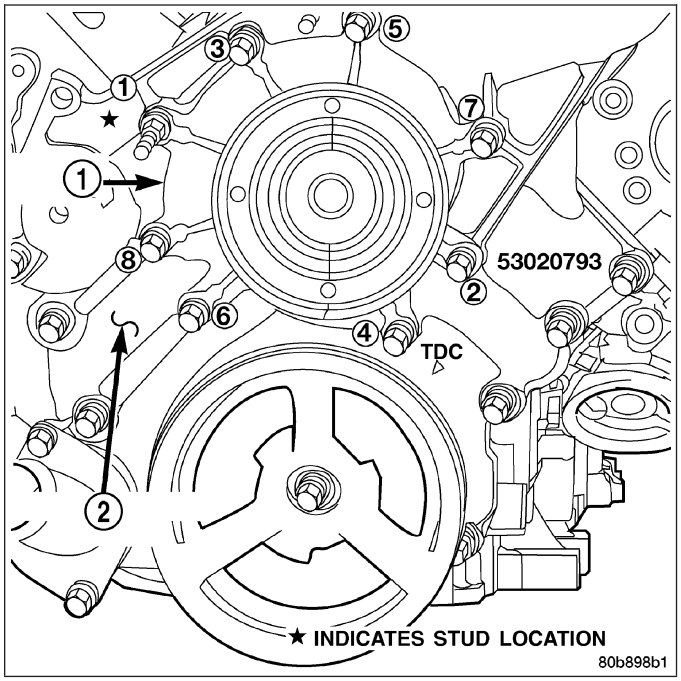

5. Relax the tension from the belt tensioner. Install the drive belt (Refer to 7 - COOLING/ACCESSORY DRIVE/DRIVE BELTS - INSTALLATION).

CAUTION: When installing the serpentine accessory drive belt, the belt must be routed correctly. If not, the engine may overheat due to the water pump rotating in the wrong direction. Refer to for the correct belt routing. Or, refer to the Belt Routing Label located in the engine compartment. The correct belt with correct length must be used.

6. Install the radiator fan (Refer to 7 - COOLING/ENGINE/RADIATOR FAN - INSTALLATION).
7. Fill cooling system (Refer to 7 - COOLING - STANDARD PROCEDURE).
8. Connect the negative battery cable.
9. Start and warm the engine. Check for leaks.

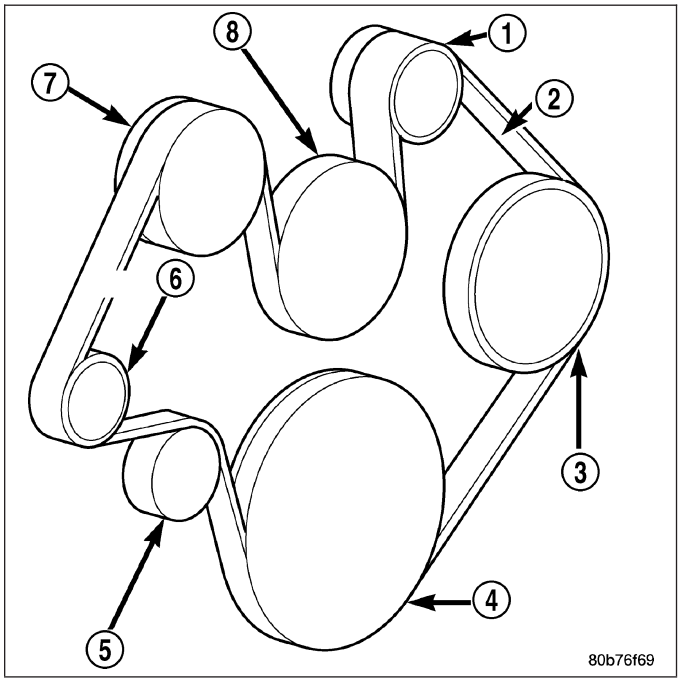

5.7L ENGINE

1. Install water pump and mounting bolts. Tighten moubting bolts to 24 N·m (18 ft. lbs.).
2. Install heater hoses.
3. Install upper and lower radiator hoses.
4. Install belt tensioner assembly.
5. Install idler pulleys.
6. Install A/C compressor and alternator brace. Tighten bolt and nuts to 28 N·m (21 ft. lbs.).
7. Install fan shroud assembly.
8. Connect washer bottle wiring and hose.
9. Install coolant fill bottle.
10. Install fan clutch assembly.
11. Install serpentine belt.
12. Connect negative battery cable.
13. Fill coolant.
14. Pressure test coolant system

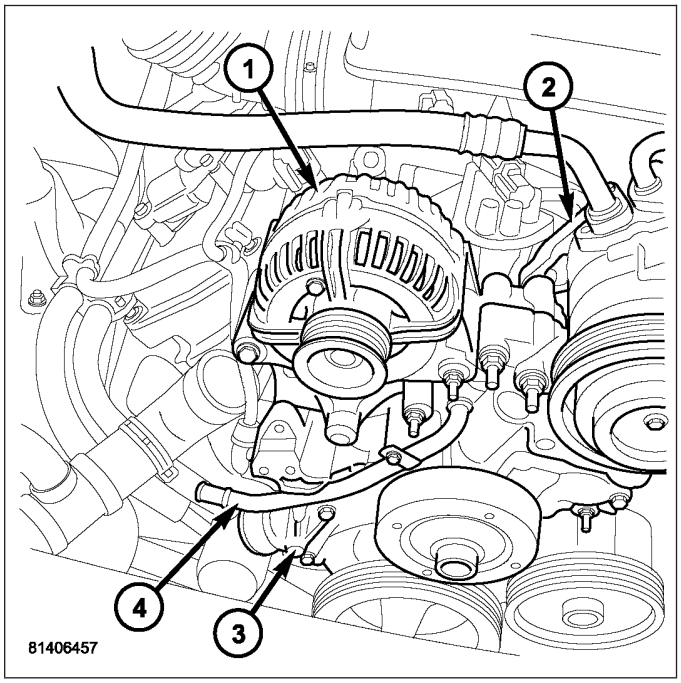

5.9L DIESEL ENGINE

1. Install new O-ring seal in groove on water pump.
2. Install water pump with the weep hole facing downward. Tighten mounting bolts to 24 N·m (18 ft. lbs.) torque.
3. Install accessory drive belt (Refer to 7 - COOLING/ ACCESSORY DRIVE/DRIVE BELTS - INSTALLATION).
4. Fill cooling system (Refer to 7 - COOLING - STANDARD PROCEDURE).
5. Connect both battery cables.
6. Start and warm the engine. Check for leaks.

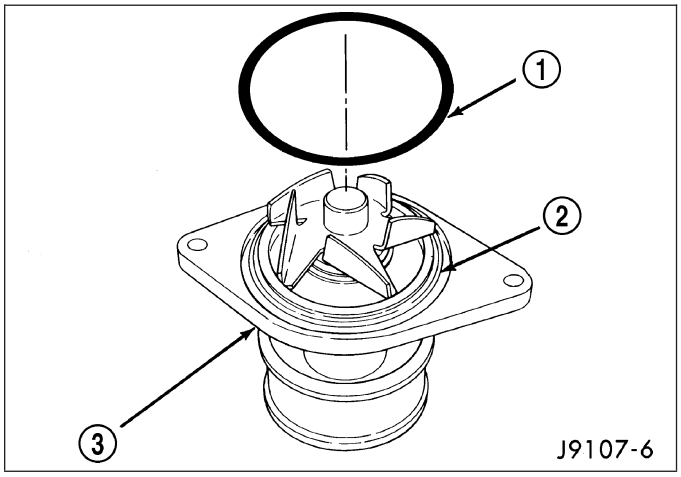

8.3L ENGINE

1. If water pump is being replaced, install the heater hose fitting to the pump. Tighten fitting to 16 N·m (144 in. lbs.) torque. After fitting has been torqued, position fitting as shown in. When positioning fitting, do not back off (rotate counterclockwise). Use a sealant on the fitting such as Mopar® Thread Sealant With Teflon. Refer to the directions on the package.

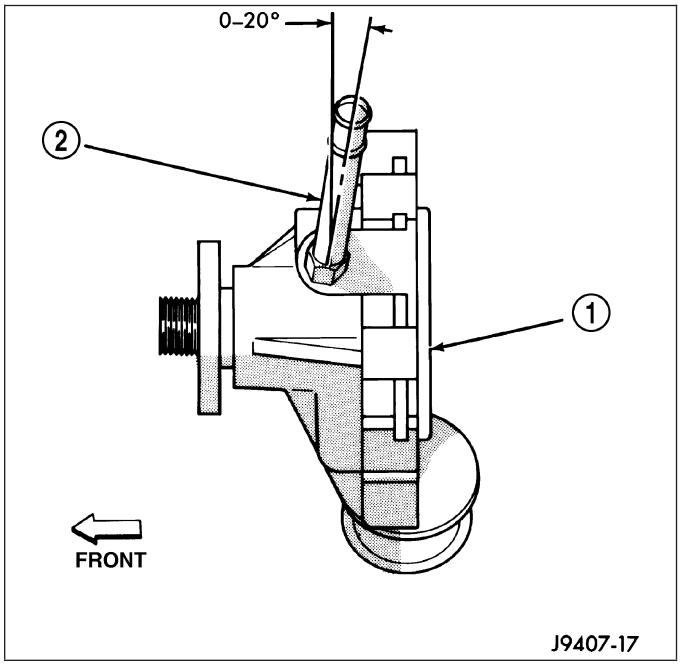

CAUTION: This heater hose fitting must be installed to pump before pump is installed to engine.

2. Clean the o-ring mating surfaces at rear of water pump and front of timing chain/case cover.
3. Apply a small amount of petroleum jelly to o-ring. This will help retain o-ring to water pump.
4. Install water pump to engine as follows: Guide water pump fitting into bypass hose as pump is being installed. Install water pump bolts. Tighten water pump mounting bolts to 40 N·m (30 ft. lbs.) torque.
5. Position bypass hose clamp to bypass hose.
6. Spin water pump to be sure that pump impeller does not rub against timing chain case/cover.
7. Connect radiator lower hose to water pump.
8. Connect heater hose and hose clamp to heater hose fitting.
9. Install drive belt (Refer to 7 - COOLING/ACCESSORY DRIVE/DRIVE BELTS - INSTALLATION).
10. Position fan shroud and fan blade/viscous fan drive assembly to vehicle as a complete unit.
11. Install fan shroud to radiator. Tighten bolts to 6 N·m (50 in. lbs.) torque.
12. Install fan blade/viscous fan drive assembly to water pump shaft.
13. Fill cooling system (Refer to 7 - COOLING - STANDARD PROCEDURE).
14. Connect negative battery cable.
15. Start and warm the engine. Check for leaks.

TRANSMISSION

TABLE OF CONTENTS

page

TRANSMISSION
STANDARD PROCEDURE
TRANSMISSION COOLER LINE QUICK CONNECT FITTING DISASSEMBLY/ASSEMBLY . . . 100
COOLER-TRANSMISSION OIL
DESCRIPTION
ALL VEHICLES . . . 102
5.9L DIESEL . . . 102
OPERATION
GAS ENGINES . . . 103
5.9L DIESEL ENGINE . . . 103
REMOVAL
3.7L ENGINE . . . 104
4.7L ENGINE . . . 104
5.7L ENGINE . . . 105
AIR TO OIL COOLER - 5.9L DIESEL . . . 105
REMOVAL - WATER TO OIL COOLER . . . 105
8.3L ENGINE . . . 106
DISASSEMBLY - 5.9L DIESEL - 8.3L ENGINES . 107
ASSEMBLY - 5.9L DIESEL - 8.3L ENGINES . . . 107
INSTALLATION
3.7L ENGINE . . . 108
4.7L ENGINE . . . 108
5.7L ENGINE . . . 109
AIR TO OIL COOLER - 5.9L DIESEL . . . 109
INSTALLATION - WATER-TO-OIL COOLER . . . 110
8.3L ENGINE . . . 110

TRANSMISSION

STANDARD PROCEDURE

TRANSMISSION COOLER LINE QUICK CONNECT FITTING DISASSEMBLY/ ASSEMBLY

DISCONNECT

1. Remove dust cap by pulling it straight back off of quick connect fitting.
2. Place disconnect tool Special Tool 8875A onto transmission cooler line with the fingers of the tool facing the quick connect fitting.
3. Slide disconnect tool down the transmission line and engage the fingers of the tool into the retaining clip. When properly engaged in the clip, the tool will fit flush against the quick connect fitting.
4. Rotate the disconnect tool 60° to expand the retaining clip.
5. While holding the disconnect tool against the quick connect fitting, pull back on the transmission cooler line to remove.

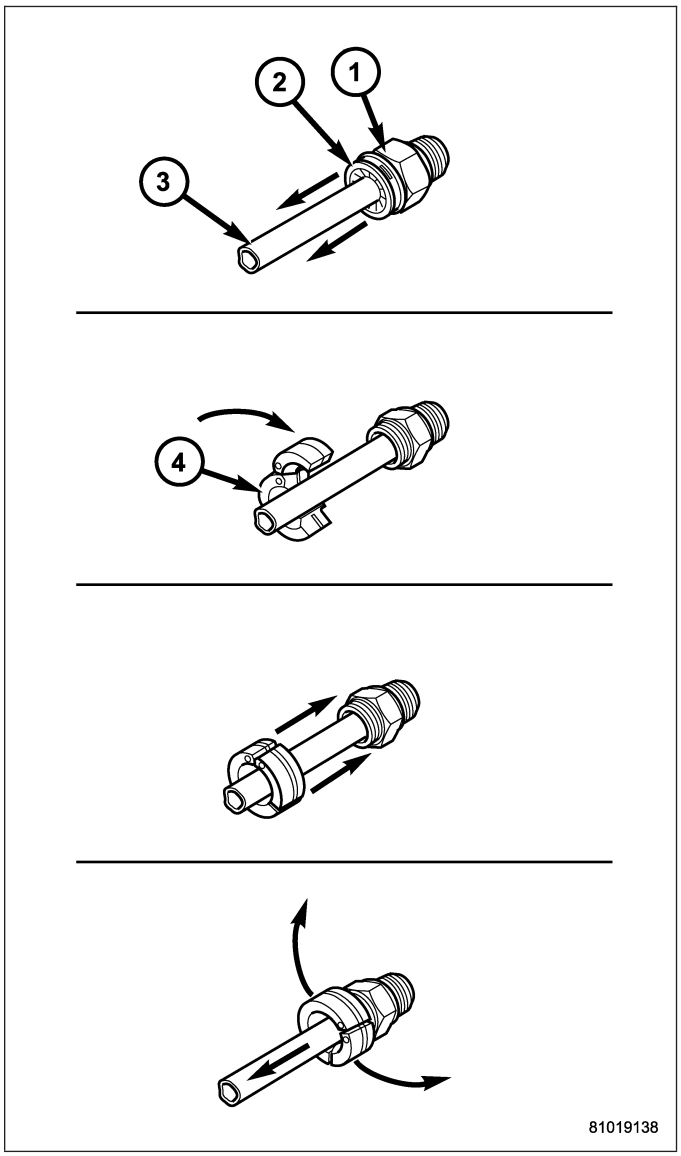

CONNECT

1. Align transmission cooler line with quick connect fitting while pushing straight into the fitting.
2. Push in on transmission cooler line until a “click” is heard or felt.
3. Slide dust cap down the transmission cooler line and snap it over the quick connect fitting until it is fully seated and rotates freely. Dust cap will only snap over quick connect fitting when the transmission cooler line is properly installed.

NOTE: If dust cap will not snap into place, repeat assembly step 2.

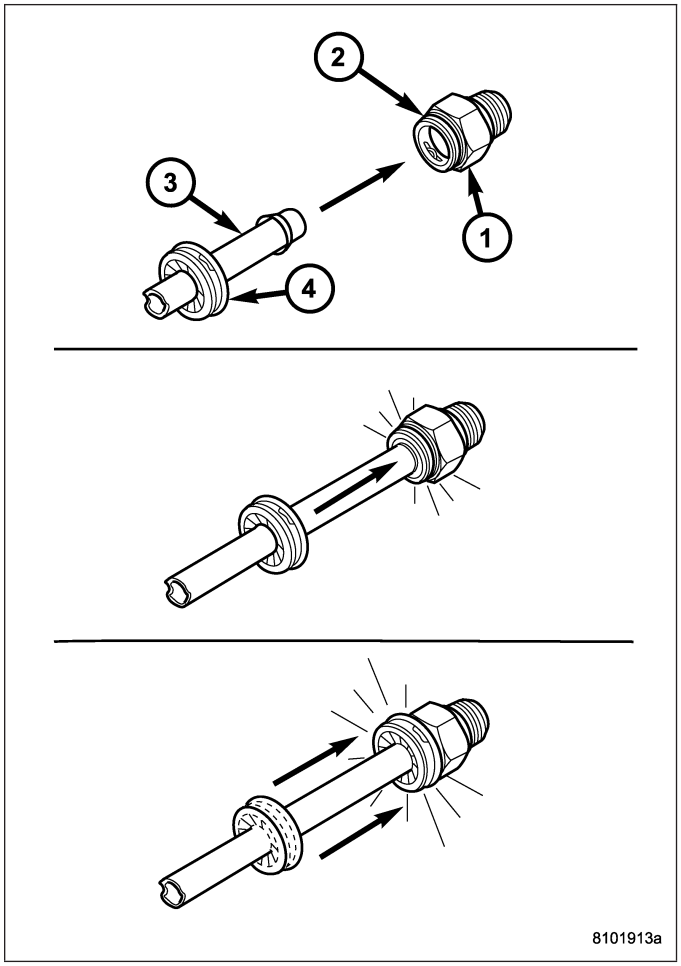

COOLER-TRANSMISSION OIL

DESCRIPTION

ALL VEHICLES

An air-to-oil transmission oil cooler is standard on all engine packages. The transmission oil cooler is mounted to the front of the radiator above the power steering cooler and

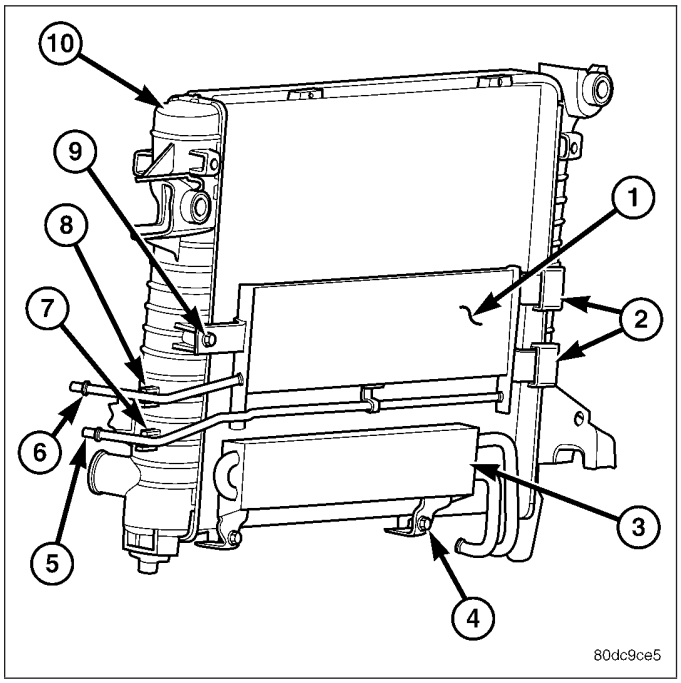

5.9L DIESEL

All diesel models equipped with an automatic transmission are equipped with both a main water-to-oil cooler and a separate air-to-oil cooler. Both coolers are supplied as standard equipment on diesel engine powered models when equipped with an automatic transmission.

The main water-to-oil transmission oil cooler is mounted to a bracket on the intake side of the engine.

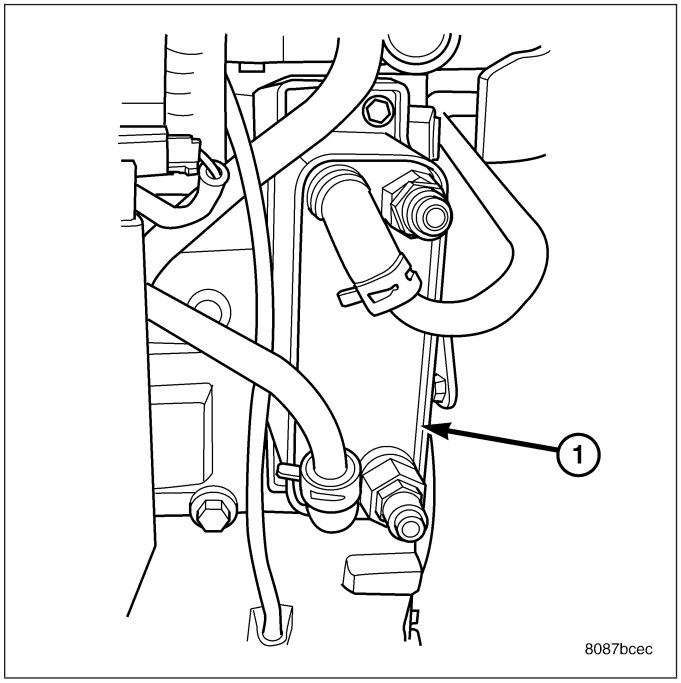

The air-to-oil cooler is located in front of the radiator.

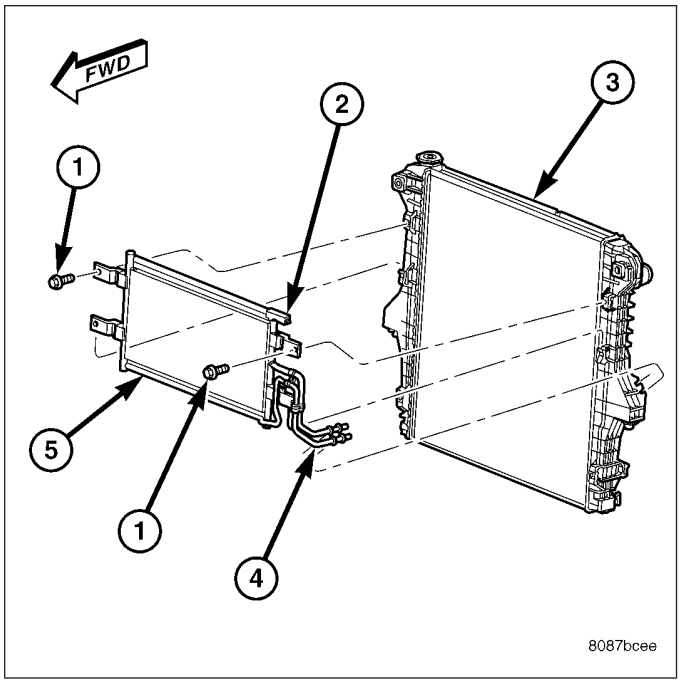

OPERATION

GAS ENGINES

Transmission oil is routed through the cooler where heat is removed from the transmission oil before returning to the transmission.

5.9L DIESEL ENGINE

The transmission oil is routed through the main cooler first, then the auxiliary cooler where additional heat is removed from the transmission oil before returning to the transmission. The auxiliary cooler has an internal thermostat that controls fluid flow through the cooler. When the transmission fluid is cold (less then operating temperature), the fluid is routed through the cooler bypass. When the transmission fluid reaches operating temperatures and above, the thermostat closes off the bypass allowing fluid flow through the cooler. The thermostat is servicable.

REMOVAL

3.7L ENGINE

1. Place a drain pan under the oil cooler lines.
2. Disconnect the transmission oil cooler line quick-connect fitting at the cooler outlet using the quick connect release tool 6935. Plug the cooler lines to prevent oil leakage.
3. Unsnap the transmission cooler tubes from the radiator tank clips.
4. Remove the bolt attaching the transmission cooler to the radiator.
5. Remove oil cooler from the vehicle. Take care not to damage the radiator core or transmission cooler tubes.

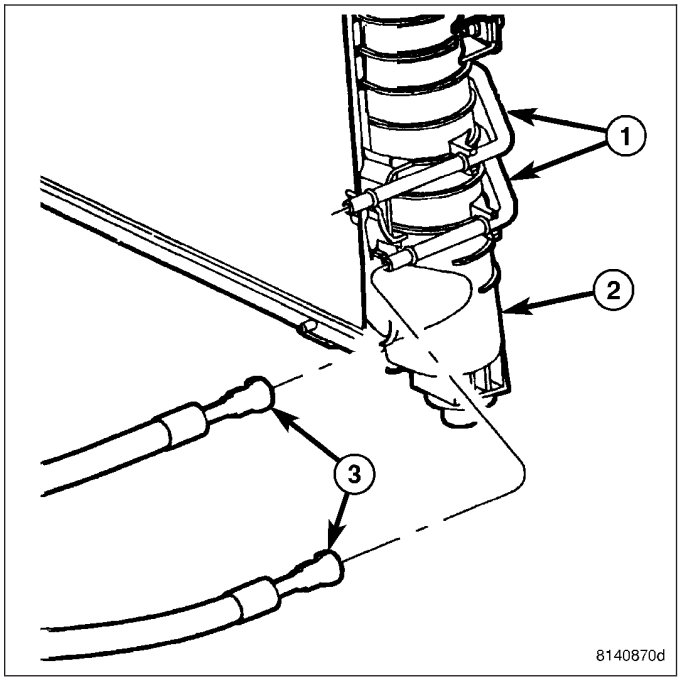

4.7L ENGINE

1. Place a drain pan under the oil cooler lines.
2. Disconnect the transmission oil cooler line quick-connect fitting at the cooler outlet using the quick connect release tool 6935 (Refer to 7 - COOLING/ TRANSMISSION - STANDARD PROCEDURE). Plug the cooler lines to prevent oil leakage.
3. Unsnap the transmission cooler tubes from the radiator tank clips.
4. Remove the bolt attaching the transmission cooler to the radiator.
5. Remove oil cooler from the vehicle. Take care not to damage the radiator core or transmission cooler tubes.

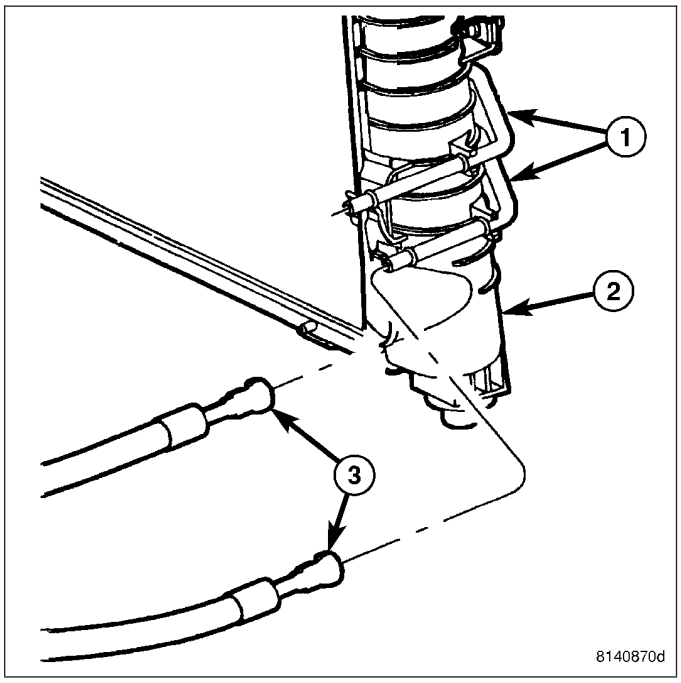

5.7L ENGINE

1. Place a drain pan under the oil cooler lines.
2. Disconnect the transmission oil cooler line quick-connect fitting at the cooler outlet using the quick connect release tool 6935. Plug the cooler lines to prevent oil leakage.
3. Unsnap the transmission cooler tubes from the radiator tank clips.
4. Remove the bolt attaching the transmission cooler to the radiator.
5. Remove oil cooler from the vehicle. Take care not to damage the radiator core or transmission cooler tubes.

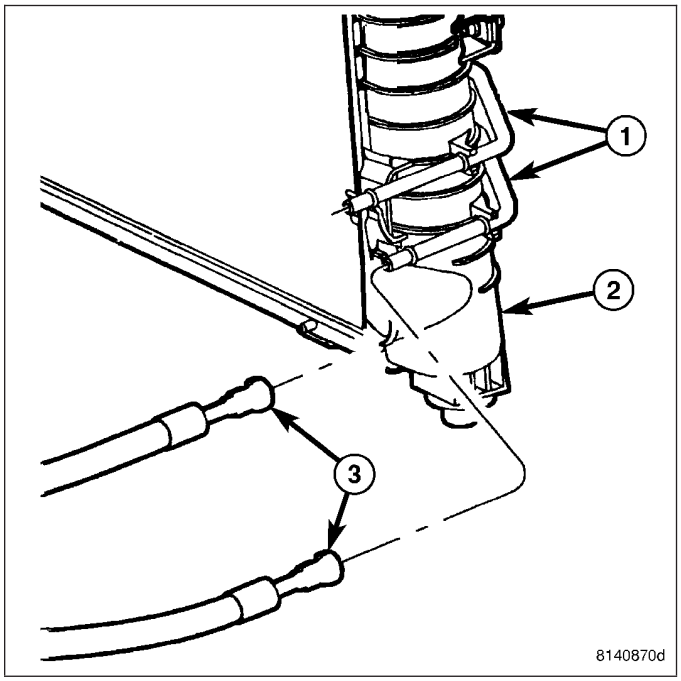

AIR TO OIL COOLER - 5.9L DIESEL

1. Remove Charge Air Cooler (Refer to 11 - EXHAUST SYSTEM/TURBOCHARGER SYSTEM/ CHARGE AIR COOLER AND PLUMBING - REMOVAL).
2. Place a drain pan under the oil cooler.
3. Raise the vehicle.
4. Disconnect the oil cooler quick-connect fittings from the transmission lines.
5. Remove the charge air cooler-to-oil cooler bolt.
6. Remove two mounting nuts.
7. Remove the oil cooler and line assembly towards the front of vehicle. Cooler must be rotated and tilted into position while removing.

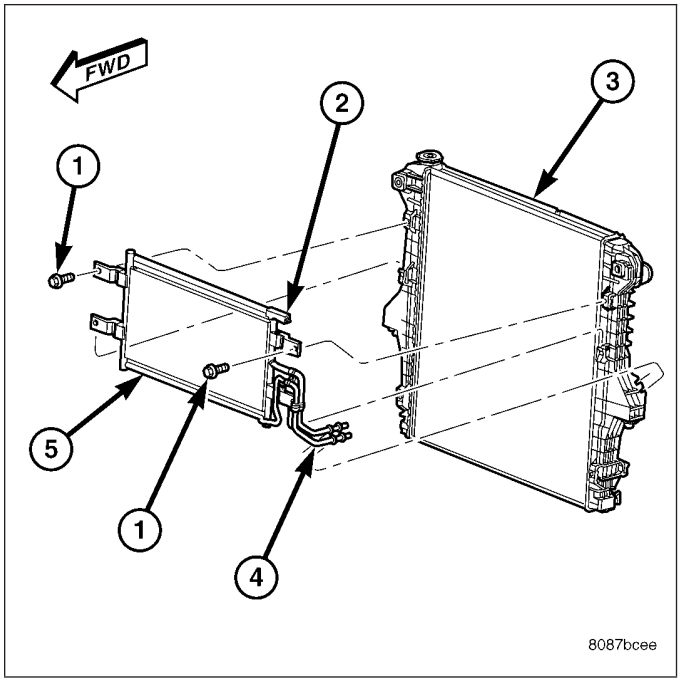

REMOVAL - WATER TO OIL COOLER

CAUTION: If a leak should occur in the water-to-oil cooler mounted to the side of the engine block, engine coolant may become mixed with transmission fluid. Transmission fluid may also enter engine cooling system. Both cooling system and transmission should be drained and inspected in case of oil cooler leakage.

1. Disconnect both battery negative cables.
2. Remove starter (Refer to 8 - ELECTRICAL/STARTING/STARTER MOTOR - REMOVAL).
3. Drain cooling system (Refer to 7 - COOLING - STANDARD PROCEDURE).

4. Disconnect coolant lines from cooler.

NOTE: Use a back-up wrench on the transmission cooler fittings to prevent damage to the cooler.

5. Disconnect transmission oil lines from cooler. Plug cooler lines to prevent oil leakage.
6. Remove cooler bracket to transmission adapter bolt.
7. Remove wire harness push in clip at bottom of coolant bracket.
8. Remove wire harness push in clip at bottom of coolant bracket.
9. Remove two cooler bracket to block bolts.
10. Remove cooler assembly from vehicle.

8.3L ENGINE

1. Place a drain pan under the oil cooler.
2. Raise the vehicle.
3. Disconnect the oil cooler quick-connect fittings from the transmission lines.
4. Remove cooler mounting bolts.
5. Remove the oil cooler and line assembly towards the front of vehicle. Cooler must be rotated and tilted into position while removing.

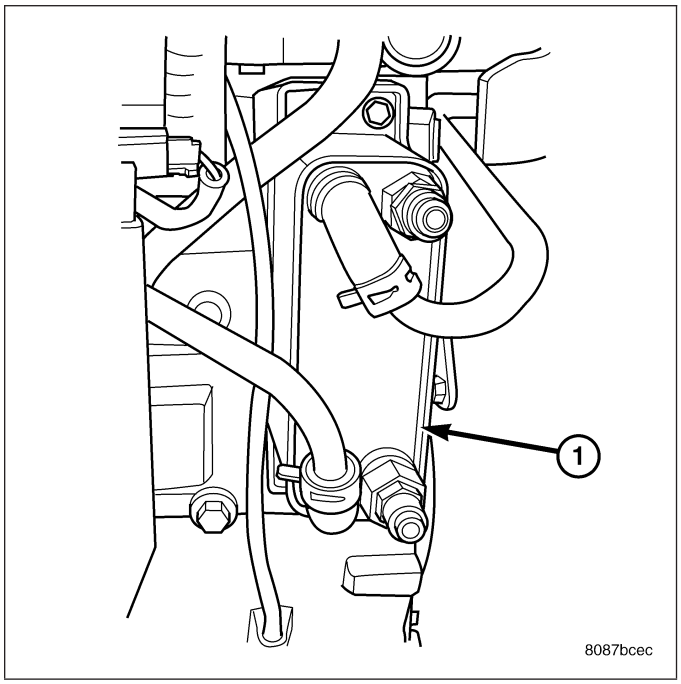

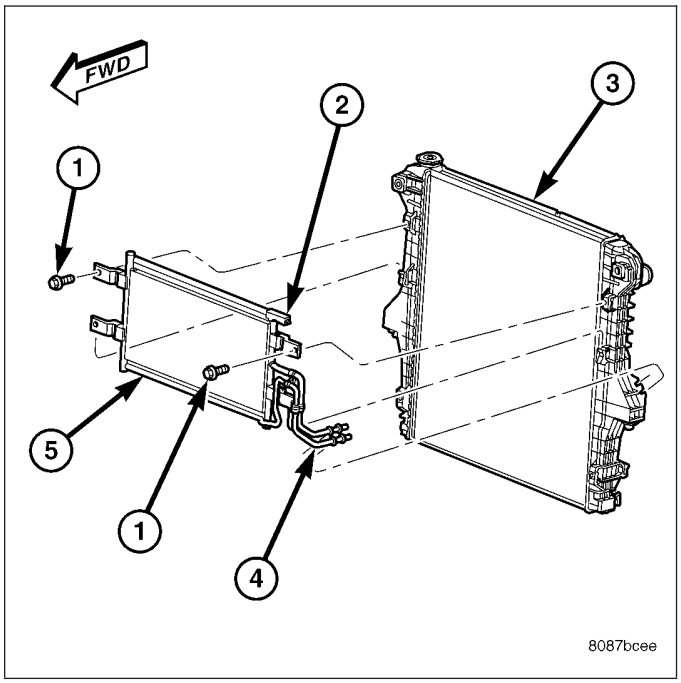

DISASSEMBLY - 5.9L DIESEL - 8.3L ENGINES

NOTE: The transmission oil cooler uses an internal thermostat to control transmission oil flow through the cooler. This thermostat is servicable.

1. Remove the transmission oil cooler (Refer to 7 - COOLING/TRANSMISSION/TRANS COOLER - REMOVAL).
2. Remove the snap ring retaining the thermostat end plug.
3. Remove the end plug, thermostat and spring from transmission oil cooler.

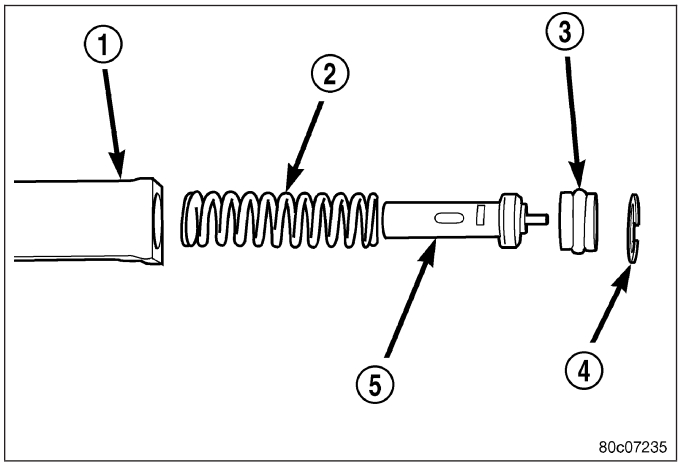

ASSEMBLY - 5.9L DIESEL - 8.3L ENGINES

1. Throughly clean the thermostat bore on the transmission oil cooler.
2. Install the new spring, thermostat, end plug and snap ring.
3. Install the transmission oil cooler (Refer to 7 - COOLING/TRANSMISSION/TRANS COOLER - INSTALLATION).

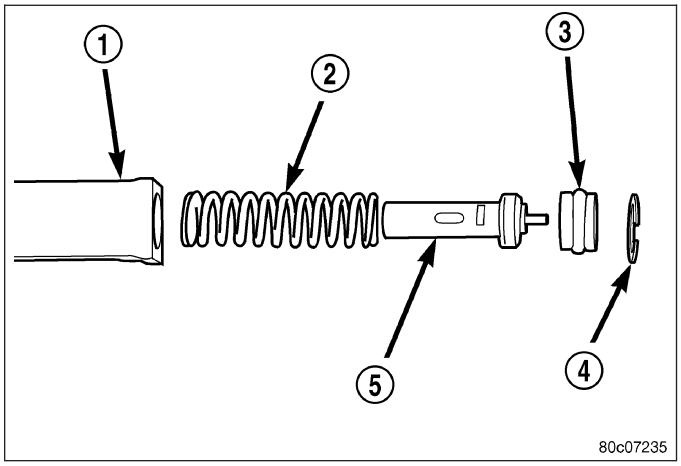

INSTALLATION

3.7L ENGINE

1. Position the transmission cooler tubes to the front of the radiator by sliding brackets into slots on radiator inlet tank.
2. Snap the transmission cooler tubes into the clips on the side of the radiator tank.
3. Install the transmission cooler attaching bolt. Tighten the bolt to 16 N·m (140 in. lbs.).
4. Inspect the quick connect fittings for debris and install the quick connect fitting on the cooler tube until an audible “click” is heard. Pull apart the connection to verify proper installation and install the secondary latches.
5. Start the engine and check all fittings for leaks.
6. Check the fluid level in the automatic transmission. Refer to the appropriate transmission section (Refer to 21 - TRANSMISSION/TRANSAXLE/AUTOMATIC - 45RFE/545RFE/FLUID - STANDARD PROCEDURE) or (Refer to 21 - TRANSMISSION/TRANSAXLE/AUTOMATIC - 46RE/FLUID - STANDARD PROCEDURE).

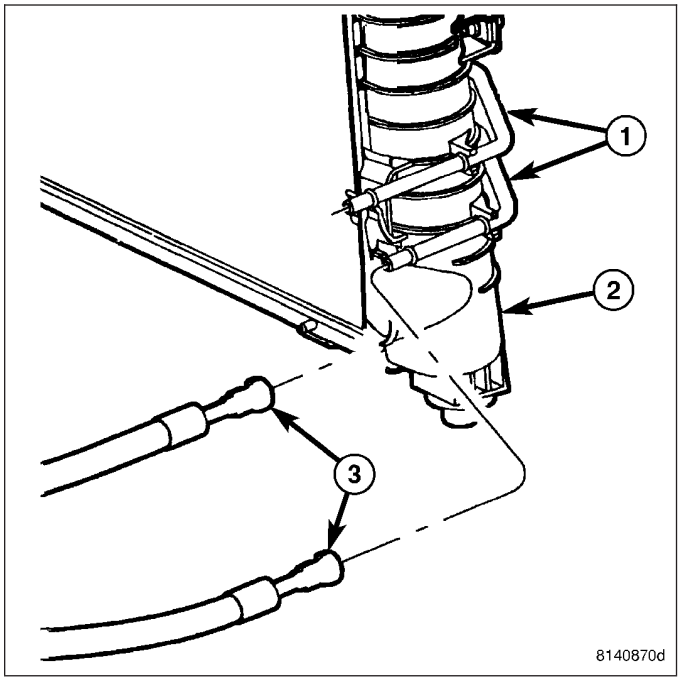

4.7L ENGINE

1. Position the transmission cooler tubes to the front of the radiator by sliding brackets into slots on radiator inlet tank.
2. Snap the transmission cooler tubes into the clips on the side of the radiator tank.
3. Install the transmission cooler attaching bolt. Tighten the bolt to 16 N·m (140 in. lbs.).
4. Inspect the quick connect fittings for debris and install the quick connect fitting on the cooler tube until an audible “click” is heard. Pull apart the connection to verify proper installation and install the secondary latches (Refer to 7 - COOLING/TRANSMISSION - STANDARD PROCEDURE).
5. Start the engine and check all fittings for leaks.
6. Check the fluid level in the automatic transmission. Refer to the appropriate transmission section (Refer to 21 - TRANSMISSION/TRANSAXLE/AUTOMATIC - 45RFE/545RFE/FLUID - STANDARD PROCEDURE) or (Refer to 21 - TRANSMISSION/TRANSAXLE/AUTOMATIC - 46RE/FLUID - STANDARD PROCEDURE).

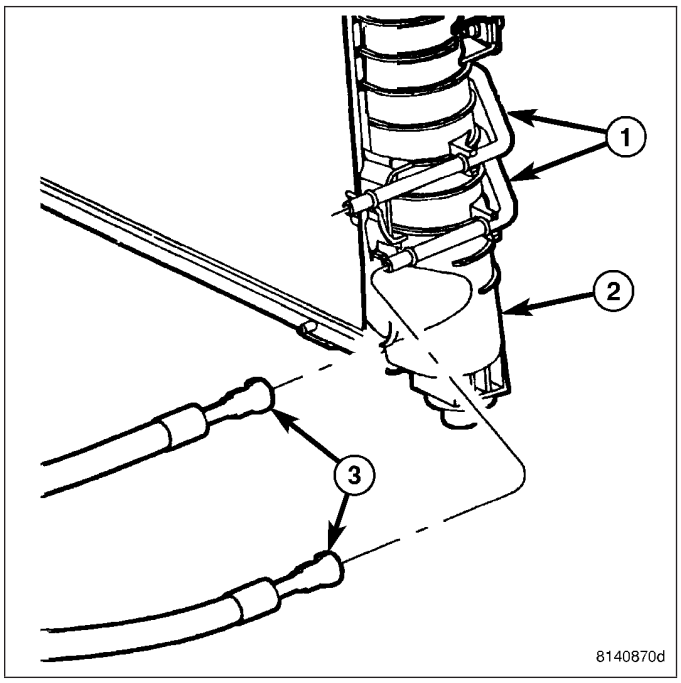

5.7L ENGINE

1. Position the transmission cooler tubes to the front of the radiator by sliding brackets into slots on radiator inlet tank.
2. Snap the transmission cooler tubes into the clips on the side of the radiator tank.
3. Install the transmission cooler attaching bolt. Tighten the bolt to 16 N·m (140 in. lbs.).
4. Inspect the quick connect fittings for debris and install the quick connect fitting on the cooler tube until an audible “click” is heard. Pull apart the connection to verify proper installation and install the secondary latches (Refer to 7 - COOLING/TRANSMISSION - STANDARD PROCEDURE).
5. Start the engine and check all fittings for leaks.
6. Check the fluid level in the automatic transmission. Refer to the appropriate transmission section (Refer to 21 - TRANSMISSION/TRANSAXLE/AUTOMATIC - 45RFE/545RFE/FLUID - STANDARD PROCEDURE) or (Refer to 21 - TRANSMISSION/TRANSAXLE/AUTOMATIC - 46RE/FLUID - STANDARD PROCEDURE).

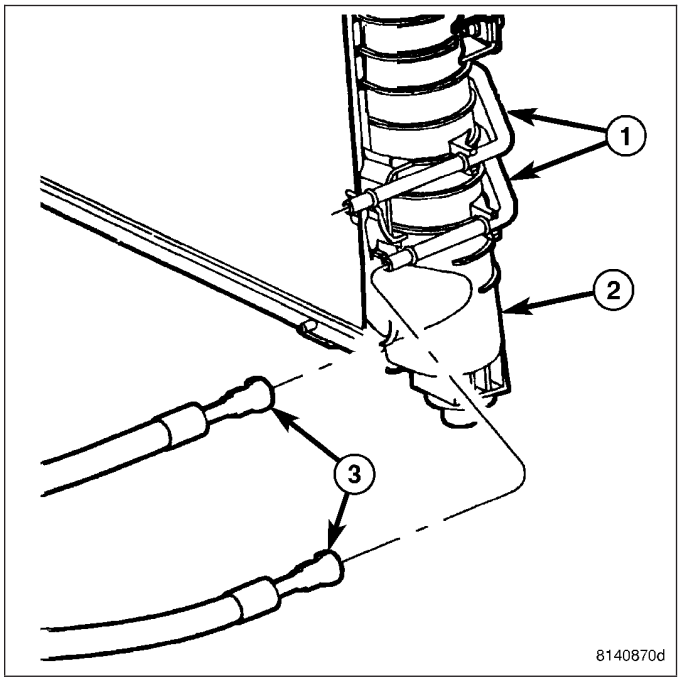

AIR TO OIL COOLER - 5.9L DIESEL

1. Carefully position the oil cooler assembly to the vehicle.
2. Install two nuts and one bolt. Tighten to 11 N·m (95 in. lbs.) torque.
3. Connect the quick-connect fittings to the transmission cooler lines.
4. Install Charge Air Cooler (Refer to 11 - EXHAUST SYSTEM/TURBOCHARGER SYSTEM/CHARGE AIR COOLER AND PLUMBING - INSTALLATION).
5. Start the engine and check all fittings for leaks.
6. Check the fluid level in the automatic transmission (Refer to 21 - TRANSMISSION/TRANSAXLE/AUTOMATIC - 47RE/FLUID - STANDARD PROCEDURE).

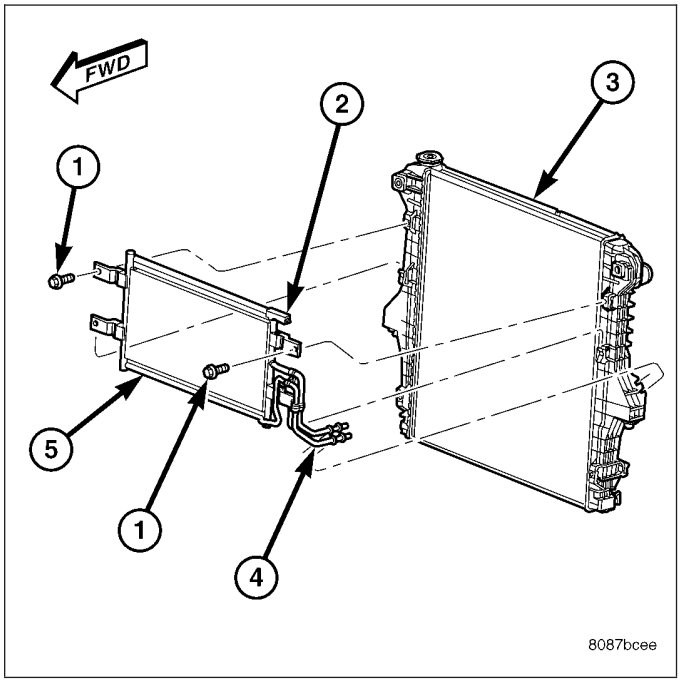

INSTALLATION - WATER-TO-OIL COOLER

1. Position oil cooler on cylinder block.
2. Install 2 capscrews to cylinder block finger tight.
3. Install capscrews at the transmission adapter. Torque bolt to 24 N·m (18 ft. lbs.)
4. Tighten lower mounting bolt to cooler at the cylinder block. Tighten to 77 N·m (57 ft. lbs.).

NOTE: Use a back-up wrench on the transmission cooler fittings to prevent damage to the cooler.

5. Tighten upper mounting bolt to cooler at cylinder block to 24 N.m (18 ft. lbs).
6. Install wire harness push in clip at bottom of cooler bracket.
7. Install starter motor (Refer to 8 - ELECTRICAL/ STARTING/STARTER MOTOR - INSTALLATION).
8. Connect battery negative cables.
9. Fill cooling system (Refer to 7 - COOLING - STANDARD PROCEDURE).
10. Check transmission oil level and fill as necessary (Refer to 21 - TRANSMISSION/TRANSAXLE/AUTOMATIC - 47RE/FLUID - STANDARD PROCEDURE).

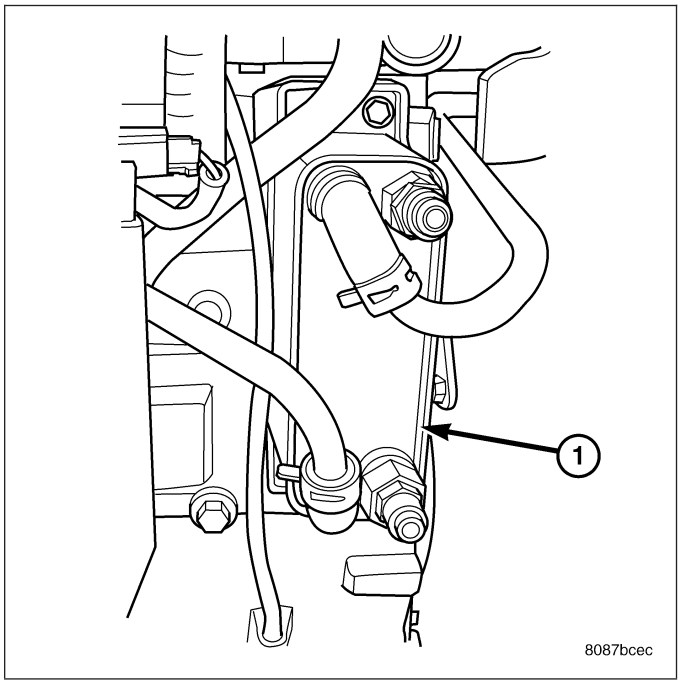

8.3L ENGINE
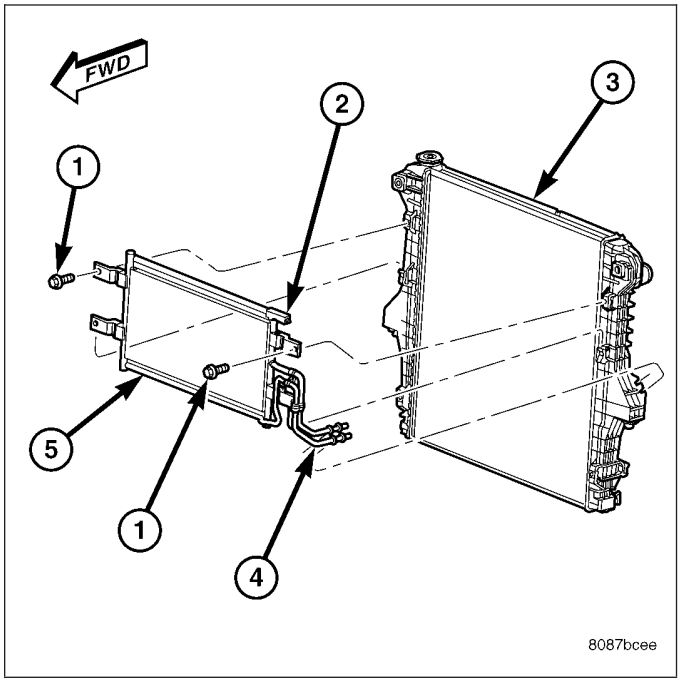
1. Carefully position the oil cooler assembly to the vehicle.
2. Install two nuts and one bolt. Tighten to 11 N·m (95 in. lbs.) torque.
3. Connect the quick-connect fittings to the transmission cooler lines.
4. Start the engine and check all fittings for leaks.
5. Check the fluid level in the automatic transmission (Refer to 21 - TRANSMISSION/TRANSAXLE/AUTOMATIC - 47RE/FLUID - STANDARD PROCEDURE).