https://truckmanualshub.com/

Genie®
A TEREX BRAND

Service and Repair Manual

Serial Number Range

GTH™-1056

from GTH10E-16000

This manual includes:
Repair procedures
Fault Codes
Electrical and
Hydraulic Schematics

For detailed maintenance procedures, refer to the appropriate Maintenance Manual for your machine.

Part No. 1303145GT
Rev A
May 2021

https://truckmanualshub.com/

Introduction

Important

Read, understand and obey the safety rules and operating instructions in the appropriate Operator's Manual on your machine before attempting any procedure.

This manual provides troubleshooting and repair procedures for qualified service professionals.

Basic mechanical, hydraulic and electrical skills are required to perform most procedures. However, several procedures require specialized skills, tools, lifting equipment and a suitable workshop. In these instances, we strongly recommend that maintenance and repair be performed at an authorized Genie dealer service center.

Compliance

Machine Design Life

Unrestricted with proper operation, inspection and scheduled maintenance.

Technical Publications

Genie has endeavored to deliver the highest degree of accuracy possible. However, continuous improvement of our products is a Genie policy. Therefore, product specifications are subject to change without notice.

Readers are encouraged to notify Genie of errors and send in suggestions for improvement. All communications will be carefully considered for future printings of this and all other manuals.

Contact Us:

Internet: www.genielift.com
E-mail: awp.techpub@terex.com

Find a Manual for this Model

Go to http://www.genielift.com

Use the links to locate Service Manuals, Maintenance Manuals, Service and Repair Manuals, Parts Manuals and Operator's Manuals.

Copyright © 2018 by Terex Corporation

1303145GT Rev A, May 2021

Fifth Edition, First Printing

Genie is a registered trademark of Terex South Dakota, Inc. in the U.S.A. and many other countries.

"GTH" is a trademark of Terex South Dakota, Inc.

https://truckmanualshub.com/

Revision History

Revision	Date	Section	Procedure / Page / Description
A	5/2021		Initial Release

Reference Examples:	Electronic Version Click on any content or procedure in the Table of Contents to view the update.
Section – Repair Procedure, 4-2	
Section – Fault Codes, All charts	
Section – Schematics, Legends and schematics	

https://truckmanualshub.com/

Introduction

Serial Number Legend

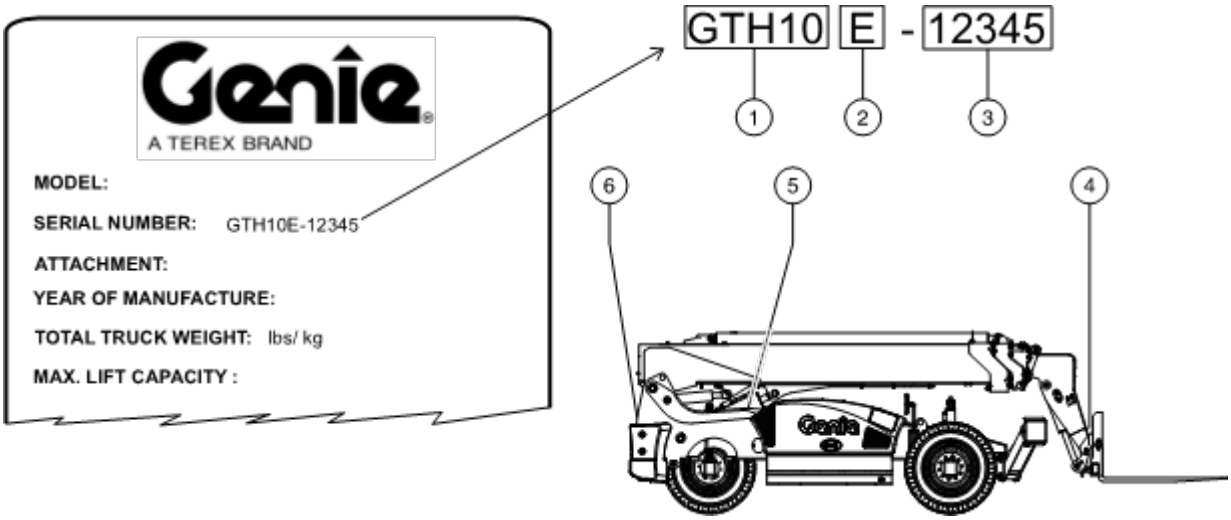

1 Model
2 Facility code
3 Sequence number
4 Serial label (located inside fork frame)
5 Serial number (stamped on chassis)
6 Serial label (located inside chassis)

https://truckmanualshub.com/

Safety Rules

Danger

Failure to obey the instructions and safety rules in this manual and the appropriate Operator's Manual on your machine will result in death or serious injury.

Many of the hazards identified in the operator's manual are also safety hazards when maintenance and repair procedures are performed.

Do not modify or alter a Telehandler without prior written permission from the manufacture.

Do Not Perform Maintenance Unless:

☑ You are trained and qualified to perform maintenance on this machine.

☑ You read, understand and obey:

- manufacturer's instructions and safety rules
- employer's safety rules and worksite regulations
- applicable governmental regulations

☑ You have the appropriate tools, lifting equipment and a suitable workshop.

https://truckmanualshub.com/

Safety Rules

Workplace Safety

Any person working on or around a machine must be aware of all known safety hazards. Personal safety and the continued safe operation of the machine should be your top priority.

Be sure to keep sparks, flames and lighted tobacco away from flammable and combustible materials like battery gases and engine fuels. Always have an approved fire extinguisher within easy reach.

Be sure that all tools and working areas are properly maintained and ready for use. Keep work surfaces clean and free of debris that could get into machine components and cause damage.

Be sure any forklift, overhead crane or other lifting or supporting device is fully capable of supporting and stabilizing the weight to be lifted. Use only chains or straps that are in good condition and of ample capacity.

Be sure that fasteners intended for one time use (i.e., cotter pins and self-locking nuts) are not reused. These components may fail if they are used a second time.

Be sure to properly dispose of old oil or other fluids. Use an approved container. Please be environmentally safe.

Be sure that your workshop or work area is properly ventilated and well lit.

https://truckmanualshub.com/

Table of Contents

Introduction	**Introduction**	**ii**
	Important Information	ii
	Find a Manual for this Model	ii
	Serial Number Legend	iv
Section 1	**Safety Rules**	**v**
	General Safety Rules	v
Section 2	**Specifications**	**1**
	Machine Specifications	1
	Performance Specifications	2
	Hydraulic Oil Specifications	2
	Hydraulic Component Specifications	6
	Manifold Component Specifications	7
	Air Conditioner Refrigerant Specifications	7
	DEF Storage Specifications	7
	Deutz TCD3.6 120HP T4F Engine Specifications	8
	Deutz TCD3.6 L4 T4F Engine Specifications	9
	Deutz TCD3.6 ROW Engine Specifications	10
	ZF 4 WG-98 TSC Transmission Specifications	11
	ECOMEC CVT 150 Transmission Specifications	11
	Dana VDT12000 Transmission Specifications	12
	Dana Planetary Drive Axle Specifications (223_212HY)	12
	Hydraulic Hose and Fitting Torque Specifications	13
	Torque Procedure	14

https://truckmanualshub.com/

Table of Contents

Section 3 **Repair Procedures** **15**

Introduction 15

Boom Components **17**

1-1 Boom Proximity Switch 17

How to Test a Proximity Switch 17

How to Adjust the Boom Angle Proximity Switch 18

How to Adjust the Boom Extend Proximity Switch 18

1-2 Boom 19

How to Replace the Boom Wear Pads 19

How to Remove the Lifting Fork Frame 19

How to Remove and Install the Cable Track Assembly 20

How to Replace the Retract Chains 25

How to Replace the Extend Chain 28

How to Remove the Boom 30

How to Disassemble the Boom 32

1-3 Boom Lift Cylinder 35

1-4 Boom Extension Cylinder 36

1-5 Fork Level Cylinder 37

1-6 Hydraulic Hoses 38

How to Replace the Fork Level and/or Auxiliary Cylinder Hoses 38

Operator's Compartment **40**

2-1 Operator's Compartment 40

2-2 Machine Controls 41

How to Remove the Steering Column 41

How to Remove the Steering Wheel 42

How to Remove the Steer Orbitral 42

How to Remove the Joystick - Models with Electronic Joystick 43

How to Remove the Brake Pedal Assembly 43

How to Remove the Gauge Cluster Assembly 44

https://truckmanualshub.com/

Table of Contents

Fuel and Hydraulic Tanks **45**
3-1 Fuel and HydraulicTanks 45

Engines **47**
4-1 Engines 47
How to Repair the Deutz TCD3.6 Engine 47
4-2 Engine Fault Codes 47

Transmission **48**
5-1 Transmission 48
How to Repair the Transmission 48

Hydraulic Pump **49**
6-1 Hydraulic Pump 49
How to Test the Function Pump 49
How to Remove the Function Pump 50
How to Install the Function Pump 51
How to Prime the Function Pump 51
How to Adjust the Function Pump Standby Pressure 52
How to Adjust the Function Pump Pressure Compensator 53

Manifolds **55**
7-1 PVG Manifold 55
7-2 Secondary Function Manifold Components 56
7-3 Brake Manifold Components 58
7-4 Valve Adjustments - Secondary Function Manifold 59
How to Set the Parking Brake System Pressure 59
How to Set the Rear Lock-up System Pressure 60
7-5 Valve Coils 61

Axle **63**
8-1 Axles 63
How to Repair the Axle 63

Outriggers **64**
9-1 Outriggers 64
How to Remove an Outrigger 64
How to Remove an Outrigger Cylinder 65

https://truckmanualshub.com/

Table of Contents

Section 4

Fault Codes ... 67
Introduction ... 67

Diagnostic Display ... 68
Diagnostic Display ... 68

Deutz TCD3.6 Engine Fault Codes ... 69

ECGenius 150 Transmission Fault Codes ... 93

Section 5

Schematics ... 94
Introduction ... 94
Proximity Switch Legend ... 95
Fuse Panel Layout (120HP & ROW Engine) ... 96
Fuse Panel Layout (74HP Engine with CVT Transmission) ... 97
Deutz TCD3.6 T4F Module ... 98
Electrical Component & Wire Color Abbreviation Legend ... 99
Electrical Symbol Legend ... 102
Hydraulic Symbols Legend ... 103

Electrical Schematics ... 105
Electrical Schematic - Deutz T4F 74HP CVT ... 106
Electrical Schematic - Deutz T4F HP CVT Transmission ... 107
Electrical Schematic - Deutz T4F 74HP Engine Harness ... 110
Electrical Schematic - Options Deutz T4F 74HP ... 111
Electrical Schematic - Deutz T4F 74HP DANA ... 114
Electrical Schematic - Deutz T4F 74HP DANA Engine Harness ... 115
Electrical Schematic - Options Deutz T4F 74HP DANA ... 118
Electrical Schematic - Deutz T3/T4F 120HP ZF ... 119
Base Engine ECM Schematic - Deutz T4F 120HP ZF ... 122
Engine ECM Schematic - Deutz T3 120HP ZF ... 123
EAT ECM Schematic - Deutz T4F 120HP ZF ... 126
EAT ECM VEC Schematic - Deutz T4F 120HP ZF ... 127
Schematic - Options Deutz T3/T4F 120HP ZF ... 130

Hydraulic Schematics ... 131
Hydraulic Schematic ... 132

https://truckmanualshub.com/

Machine Specifications

Tires and wheels	
Tire size	14.00 x 28
Tire ply rating	12
Weight, rough terrain tire (air filled) Standard	312.5 lbs 141,7 kg
Weight, rough terrain tire (air filled) Firestone	301.25 lbs 136,6 kg
Weight, rough terrain tire (foam filled)	1031 lbs 467,7 kg
Weight, SolidBoss	1012 lbs 459 kg
Tire pressure	72 psi 5,0 bar
Lug nut torque, dry	465 ft-lbs 630 Nm
Lug pattern	10 x 13.189
Wheel diameter	28 in 71,1 cm
Wheel width	10 in 25,4 cm

Fluid capacities	
Fuel tank	30 gallons 113,6 liters
Hydraulic tank	27 gallons 102,2 liters
Hydraulic system (including tank)	52 gallons 196,8 liters
DEF tank	2.6 gallons 9,8 liters

https://truckmanualshub.com/

Specifications

Performance Specifications

Drive speed, maximum **Standard engine - 120 hp**	17 mph 27,4 km/h
Draw bar pull	25,000 lbs 11340 kg
Drive speed, maximum **Ecomec option - 74 hp**	19 mph 30,5 km/h
Draw bar pull	23,000 lbs 10433 kg
Drive speed, maximum **CVT option - 74 hp**	15 mph 24,1 km/h
Draw bar pull	23,000 lbs 10433 kg
Lift capacity, maximum	10,000 lbs 4536 kg
Boom function speeds, maximum	
Boom up	15 to 19 seconds
Boom down	12 to 16 seconds
Boom extend	23 to 25 seconds
Boom retract	30 to 32 seconds
Fork rotate	3 to 6 seconds
Fork tilt up	8.5 to 10 seconds
Fork tilt down	8 to 10 seconds
Chassis sway speed	Sway left, 16 seconds Sway right, 12.8 seconds

Hydraulic Oil Specifications

Hydraulic Fluid Specifications

Genie specifications require hydraulic oils which are designed to give maximum protection to hydraulic systems, have the ability to perform over a wide temperature range, and the viscosity index should exceed 140. They should provide excellent antiwear, oxidation prevention, corrosion inhibition, seal conditioning, and foam and aeration suppression properties.

Cleanliness level, minimum	ISO 15/13
Water content, maximum	250 ppm
Recommended Hydraulic Fluid	
Hydraulic oil type	Chevron Rando HD Premium
Viscosity grade	32
Viscosity index	200
Optional Hydraulic Fluids	
Mineral based	Shell Tellus S2 V 32 Shell Tellus S2 V 46 Shell Tellus S4 VX 32 Shell Donax TG (Dexron III) Chevron 5606A
Biodegradable	Petro Canada Environ MV 46
Fire resistant	UCON Hydrolube HP-5046

Note: Genie specifications require additional equipment and special installation instructions for the approved optional fluids. Consult Genie Product Support before use.

NOTICE Optional fluids may not have the same hydraulic lifespan and may result in component damage.

Note: Extended machine operation can cause the hydraulic fluid temperature to increase beyond its maximum allowable range. If the hydraulic fluid temperature consistently exceeds 200°F / 90°C an optional oil cooler may be required.

https://truckmanualshub.com/

NOTICE Do not top off with incompatible hydraulic fluids. Hydraulic fluids may be incompatible due to the differences in base additive chemistry. When incompatible fluids are mixed, insoluble materials may form and deposit in the hydraulic system, plugging hydraulic lines, filters, control valves and may result in component damage.

Note: Do not operate the machine when the ambient air temperature is consistently above 120°F / 49°C.

Hydraulic Fluid Temperature Range

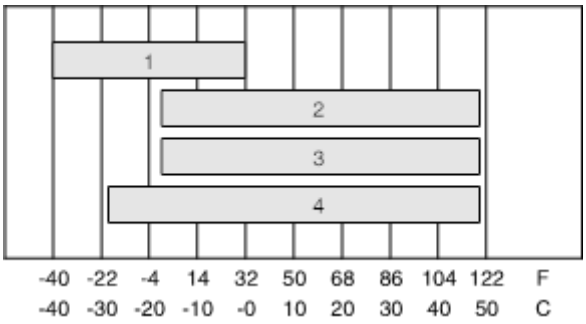

Ambient air temperature

1 Chevron hydraulic oil 5606A
2 Petro-Canada Environ MV 46
3 UCON Hydrolube HP-5046D
4 Chevron Rando HD premium oil MV

Chevron Rando HD Premium Oil MV Fluid Properties

ISO Grade	32
Viscosity index	200
Kinematic Viscosity cSt @ 200°F / 100°C cSt @ 104°F / 40°C	 7.5 33.5
Brookfield Viscosity cP @ -4°F / -20°C cP @ -22°F / -30°C	 1040 3310
Flash point	375°F / 190°C
Pour point	-58°F / -50°C
Maximum continuous operating temperature	171°F / 77°C

Note: A hydraulic oil heating system is recommended when the ambient temperature is consistently below 0°F / -18°C.

Note: Do not operate the machine when the ambient temperature is below -20°F / -29°C with Rando HD Premium MV.

https://truckmanualshub.com/

Specifications

Chevron 5606A Hydraulic Oil Fluid Properties

ISO Grade	15
Viscosity index	300
Kinematic Viscosity cSt @ 200°F / 100°C cSt @ 104°F / 40°C cSt @ -40°F / -40°C	 5.5 15.0 510
Flash point	180°F / 82°C
Pour point	-81°F / -63°C
Maximum continuous operating temperature	124°F / 51°C

Note: Use of Chevron 5606A hydraulic fluid, or equivalent, is required when ambient temperatures are consistently below 0°F / -17°C unless an oil heating system is used.

NOTICE Continued use of Chevron 5606A hydraulic fluid, or equivalent, when ambient temperatures are consistently above 32°F / 0°C may result in component damage

Petro-Canada Environ MV 46 Fluid Properties

ISO Grade	46
Viscosity index	154
Kinematic Viscosity cSt @ 200°F / 100°C cSt @ 104°F / 40°C	 8.0 44.4
Flash point	482°F / 250°C
Pour point	-49°F / -45°C
Maximum continuous operating temperature	180°F / 82°C

Shell Tellus S4 VX Fluid Properties

ISO Grade	32
Viscosity index	300
Kinematic Viscosity cSt @ 200°F / 100°C cSt @ 104°F / 40°C	 9 33.8
Brookfield Viscosity cSt @ -4°F / -20°C cSt @ -13°F / -25°C cSt @ -40°F / -40°C	 481 702.4 2624
Flash point	>100
Pour point	-76°F / -60°C
Maximum continuous operating temperature	103°F / 75°C

https://truckmanualshub.com/

UCON Hydrolube HP-5046 Fluid Properties

ISO Grade	46
Viscosity index	192
Kinematic Viscosity cSt @ 149°F / 65°C cSt @ 104°F / 40°C cSt @ 0°F / -18°C	 22 46 1300
Flash point	None
Pour point	-81°F / -63°C
Maximum continuous operating temperature	189°F / 87°C

https://truckmanualshub.com/

Specifications

Hydraulic Component Specifications

Function pump (ZF Transmission)	
Type: variable displacement piston pump	
Displacement	0 to 3.96 cu in 0 to 65 cc
Flow rate @ 2500 rpm	42.9 gpm 162.4 L/min
Pump pressure, maximum	3771 psi 260 bar
Pressure compensator	3190 psi 220 bar
Standby pressure	464 psi 32 bar

Function pump (CVT Transmission)	
Type: variable displacement piston pump	
Displacement	0 to 3 cu in 0 to 49.2 cc
Flow rate @ 2500 rpm	40 gpm 151.4 L/min
Pump pressure, maximum	4060 psi 280 bar
Pressure compensator	3000 to 3100 psi 206.8 to 213.7 bar
Standby pressure	150 psi 10.3 bar

Primary Function Manifold	
System relief valve pressure, maximum (measured at test port TP)	3626 psi 350 bar
Boom extend relief valve pressure, maximum	2611 psi 180 bar
Fork tilt relief valve pressure, maximum	3481 psi 240 bar
Secondary Function Manifold	
Steer relief valve pressure, maximum (measured at test port TS)	2500 psi 172 bar
Parking brake relief valve pressure, maximum (measured at test port TPB)	400 psi 27.5 bar
Rear lock-up relief valve pressure, maximum (measured at test port TR)	50 psi 3.4 bar
Outrigger Manifold	
Flow regulator, Outrigger circuit	6 gpm 22.7 L/min

https://truckmanualshub.com/

Manifold Component Specifications

Plug torque	
SAE No. 2	50 in-lbs / 6 Nm
SAE No. 4	13 ft-lbs / 18 Nm
SAE No. 5	15 ft lbs / 20 Nm
SAE No. 6	18 ft-lbs / 24 Nm
SAE No. 8	50 ft-lbs / 68 Nm
SAE No. 10	55 ft-lbs / 75 Nm
SAE No. 12	75 ft-lbs / 102 Nm

Air Conditioner Refrigerant Specifications

System Full Charge	
R134a	1 lb 14 oz

DEF Storage Specifications

Diesel Exhaust Fluid decomposes when exposed to elevated temperatures for an extended period of time. Therefore precautions must be taken to avoid prolonged exposure to elevated temperatures.

Temperature	Estimated Useful Life
32°F / 0°C	Indefinite
50°F / 10°C	75 years
68°F / 20°C	11 years
86°F / 30°C	23 months
95°F / 35°C	10 months
104°F / 40°C	4 months
122°F / 50°C	1 month
140°F / 60°C	1 week

https://truckmanualshub.com/

Specifications

Deutz TCD3.6 120HP T4F Engine

Displacement	221 cu in 3.62 liters
Number of cylinders	4
Bore and Stroke	3.86 x 4.72 inches 98 x 120 mm
Horsepower	121 @ 2300 rpm 90 kw @ 2300 rpm
Peak Torque	354 lb-ft @ 1600 rpm 480 Nm @ 1600 rpm
Firing order	1 - 3 - 4 - 2
Induction System	turbocharged charge air cooled
Aftertreatment	DOC + SCR
Combustion	direct injection 252 cfm / 0.18 cmm
Exhaust	703 cfm @ 2300 rpm 894°F / 470°C @ 2300 rpm
Low idle Frequency	1000 rpm 200 Hz
High idle Frequency	2300 rpm 500 Hz
Compression ratio	17.2:1
Compression pressure (psi or bar) of the lowest cylinder must be at least 75% of the highest cylinder	
Governor	electronic
Lubrication system	
Minimum oil pressure (warm, at low idle)	23.5 psi 1.6 bar
Oil capacity (including filter) Low Emission Oil	9.5 quarts 9 liters
Oil viscosity requirements	
Unit ships with Low Emission (LE) oil. Extreme operating temperatures may require the use of alternative engine oils. For oil requirements, refer to the Engine Operator Manual for your engine.	

Fuel injection system	
Injection pump pressure, maximum	23200 psi 1600 bar
Max fuel consumption	6.5 gph / 24.6 lph
Fuel requirement	
For fuel requirements, refer to the engine Operator Manual for your engine.	
Engine coolant	
Capacity	4.5 gallons 17 liters
Type	Extended Life
Starter motor	
Normal load	300-400A
Relay max	60A
Relay continuous	12A
Cranking speed	>100 rpm
Glow Plugs	
Initial load (0-6 sec)	80 amps
Continuous load (>6 sec)	<40 amps
Battery Specifications	
Type	12V DC
Group	C31
Quantity	1
Battery capacity, maximum	1000A
Reserve capacity @ 25A rate	200 Minutes
Alternator output	120A @ 12V DC

https://truckmanualshub.com/

Deutz TCD3.6 74HP T4F Engine

Displacement	221 cu in 3.62 liters
Number of cylinders	4
Bore and Stroke	3.86 x 4.72 inches 98 x 120 mm
Horsepower	74 @ 2300 rpm 55 kw @ 2300 rpm
Peak Torque	288 lb-ft @ 1300 rpm 390 Nm @ 1300 rpm
Firing order	1 - 3 - 4 - 2
Induction System	turbocharged charge air cooled
Aftertreatment	DOC + SCR
Combustion	direct injection 252 cfm / 0.18 cmm
Exhaust	703 cfm @ 2300 rpm 894°F / 470°C @ 2300 rpm
Low idle Frequency	1000 rpm 200 Hz
High idle Frequency	2300 rpm 500 Hz
Compression ratio	17.2:1

Compression pressure (psi or bar) of the lowest cylinder must be at least 75% of the highest cylinder

Governor	electronic

Lubrication system

Minimum oil pressure (warm, at low idle)	23.5 psi 1.6 bar
Oil capacity (including filter) Low Emission Oil	9.5 quarts 9 liters

Oil viscosity requirements

Unit ships with Low Emission (LE) oil.
Extreme operating temperatures may require the use of alternative engine oils. For oil requirements, refer to the Engine Operator Manual for your engine.

Fuel injection system

Injection pump pressure, maximum	23200 psi 1600 bar
Max fuel consumption	6.5 gph / 24.6 lph

Fuel requirement

For fuel requirements, refer to the engine Operator Manual for your engine.

Engine coolant

Capacity	4.5 gallons 17 liters
Type	Extended Life

Starter motor

Normal load	300-400A
Relay max	60A
Relay continuous	12A
Cranking speed	>100 rpm

Glow Plugs

Initial load (0-6 sec)	80 amps
Continuous load (>6 sec)	<40 amps

Battery Specifications

Type	12V DC
Group	C31
Quantity	1
Battery capacity, maximum	1000A
Reserve capacity @ 25A rate	200 Minutes
Alternator output	95A @ 12V DC

https://truckmanualshub.com/

Specifications

Deutz TCD3.6 ROW Engine

Displacement	221 cu in 3.62 liters
Number of cylinders	4
Bore and Stroke	3.86 x 4.72 inches 98 x 120 mm
Horsepower	100 @ 2300 rpm 74.6 kw @ 2300 rpm
Peak Torque	302 lb-ft @ 1600 rpm 409 Nm @ 1600 rpm
Firing order	1 - 3 - 4 - 2
Induction System	turbocharged charge air cooled
Aftertreatment	DOC + SCR
Combustion	direct injection 252 cfm / 0.18 cmm
Exhaust	703 cfm @ 2300 rpm 894°F / 470°C @ 2300 rpm
Low idle Frequency	1000 rpm 200 Hz
High idle Frequency	2400 rpm 500 Hz
Compression ratio	17.2:1
Compression pressure (psi or bar) of the lowest cylinder must be at least 75% of the highest cylinder	
Governor	electronic
Lubrication system	
Minimum oil pressure (warm, at low idle)	23.5 psi 1.6 bar
Oil capacity (including filter) Low Emission Oil	9.5 quarts 9 liters
Oil viscosity requirements	
Unit ships with 15W-40 API CJ4 low ash oil. Extreme operating temperatures may require the use of alternative engine oils. For oil requirements, refer to the Engine Operator Manual for your engine.	

Fuel injection system	
Injection pump pressure, maximum	23200 psi 1600 bar
Max fuel consumption	6.5 gph / 24.6 lph
Fuel requirement	
For fuel requirements, refer to the engine Operator Manual for your engine.	
Engine coolant	
Capacity	4.5 gallons 17 liters
Type	Extended Life
Starter motor	
Normal load	300-400A
Relay max	60A
Relay continuous	12A
Cranking speed	>100 rpm
Glow Plugs	
Initial load (0-6 sec)	80 amps
Continuous load (>6 sec)	<40 amps
Battery Specifications	
Type	12V DC
Group	C31
Quantity	1
Battery capacity, maximum	1000A
Reserve capacity @ 25A rate	200 Minutes
Alternator output	95A @ 12V DC

https://truckmanualshub.com/

ZF 4 WG-98 TSC Transmission

Transmission Type	4 speed powershift converter
Speeds, Forward	4
Speeds, Reverse	3
Torque Converter	
Maximum input	2600 rpm
Maximum torque	480 Nm
Lubrication	
Oil capacity	15.85 quarts 15 liters
Oil viscosity requirements	
Units ship with ZF TE-ML 03 SAE 10W30. Extreme operating temperatures may require the use of alternative transmission oils. For oil requirements, refer to the ZF 4 WG-98 TSC Maintenance Manual.	
Manual,Workshop,ZF Transmission, 4 WG-98 TSC	
Genie part number	1311107GT

ECOMEC CVT 150 Transmission

Transmission Type	2 speed powershift converter
Speeds, Forward	2
Speeds, Reverse	1
Torque Converter	
Maximum input	2600 rpm
Maximum torque	390 Nm
Lubrication	
Oil capacity	17.32 quarts 16.4 liters
Oil capacity, drop box	0.95 quarts 0.9 liters
Oil viscosity requirements	
Units ship with Valvoline I-205 Traction Oil. Extreme operating temperatures may require the use of alternative transmission oils. For oil requirements, refer to the ECOMEC CVT 150 Transmission Maintenance Manual.	
Manual,Workshop,ECOMEC CVT 150 Transmission	
Genie part number	1311099GT

https://truckmanualshub.com/

Specifications

Dana VDT12000 Transmission Specifications

Transmission Type	3 speed powershift converter
Speeds, Forward	3
Speeds, Reverse	3
Torque Converter	
Maximum input	3100 rpm
Size	12 inches
Lubrication	
Oil capacity, transmission	14.3 quarts 13.5 liters
Oil capacity, drop box	1.1 quart 1 liter
Oil viscosity requirements	
Units ship with Chevron Ursa Hydraulic 10W. Extreme operating temperatures may require the use of alternative transmission oils. For oil requirements, refer to the Dana VDT12000 Service Manual.	
Dana VDT12000 Service Manual	
Genie part number	218706

Dana Planetary Drive Axle

Steering	Integrated steer cylinder
Joints	Heavy duty double U-joints
Steering angle, maximum	45°
Differential Type	Limited Slip 45%
Front Axle Lubrication- Dana 223	
Front differential	12.7 quarts 12 liters
Axle planetary end (each)	2 quarts 1.9 liters
Rear Axle Lubrication- Dana 212HY	
Rear differential	8.0 quarts 7.6 liters
Axle planetary end (each)	0.8 quarts 0.8 liters
Oil viscosity requirements	
Differential	Fuchs 85W90 LS (GL5)
Planetary ends	Fuchs 80W90 LS (GL5)
For additional axle information, refer to the Dana Axle Maintenance and Repair Manual	
Dana 223 Axle Maintenance and Repair Manual	
Genie part number	1284290GT
Dana 212HY Axle Maintenance and Repair Manual	
Genie part number	1284291GT

https://truckmanualshub.com/

Hydraulic Hose and Fitting Torque Specifications

Your machine is equipped with Ryco ORFS or 37° JIC fittings and hose ends. Manufactures specifications require that fittings and hose ends be torqued to specification when they are removed and installed or when new hoses or fittings are installed.

JIC 37° Hose End

SAE Dash Size	Torque
-7	17 ft-lbs / 23 Nm
-8	22 ft-lbs / 30 Nm
-9	29 ft-lbs / 39 Nm
-12	57 ft-lbs / 77 Nm
-14	105 ft-lbs / 142 Nm
-17	146 ft-lbs / 198 Nm
-19	173 ft-lbs / 235 Nm
-21	194 ft-lbs / 263 Nm
-26	228 ft-lbs / 309 Nm
-30	285 ft-lbs / 386 Nm
-40	440 ft-lbs / 597 Nm

JIC 37° Port Fitting

SAE Dash Size	Torque
-5	6 - 7 ft-lbs / 8 - 9 Nm
-6	8 - 9 ft-lbs / 11 - 12 Nm
-7	11 - 12 ft-lbs / 15 - 16 Nm
-8	14 - 15 ft-lbs / 19 - 21 Nm
-9	18 - 20 ft-lbs / 24 - 28 Nm
-12	36 - 39 ft-lbs / 49 - 53 Nm
-14	57 - 63 ft-lbs / 77 - 85 Nm
-17	79 - 88 ft-lbs / 107 - 119 Nm
-19	94 - 103 ft-lbs / 127 - 140 Nm
-21	108 - 113 ft-lbs / 147 - 154 Nm
-26	127 - 133 ft-lbs / 172 - 181 Nm
-30	158 - 167 ft-lbs / 215 - 226 Nm
-40	245 - 258 ft-lbs / 332 - 350 Nm

ORFS Hose End

SAE Dash Size	Torque
-9	10 - 12 ft-lbs / 14 - 16 Nm
-11	18 - 20 ft-lbs / 24 - 27 Nm
-13	32 - 35 ft-lbs / 43 - 47 Nm
-16	46 - 50 ft-lbs / 60 - 68 Nm
-19	65 - 70 ft-lbs / 90 - 95 Nm
-23	92 - 100 ft-lbs / 125 - 135 Nm
-27	125 - 140 ft-lbs / 170 - 190 Nm
-32	150 - 165 ft-lbs / 200 - 225 Nm

SAE O-ring Boss Port Fitting

SAE Dash Size	Torque
-6	8 - 10 ft-lbs / 11 - 13 Nm
-7	14 - 16 ft lbs / 20 - 22 Nm
-8	18 - 20 ft-lbs / 24 - 27 Nm
-9	24 - 26 ft-lbs / 33 - 35 Nm
-12	50 - 60 ft-lbs / 68 - 78 Nm
-14	72 - 82 ft-lbs / 98 - 110 Nm
-17	125 - 135 ft-lbs / 170 - 183 Nm
-19	170 - 190 ft-lbs / 230 - 260 Nm
-21	200 - 220 ft-lbs / 270 - 300 Nm
-26	210 - 280 ft-lbs / 285 - 380 Nm
-30	270 - 360 ft-lbs / 370 - 490 Nm

SAE Flange Clamp Bolts

Code 61	
SAE Dash Size	**Torque**
-8	15 - 18 ft lbs / 20 - 25 Nm
-12	21 - 29 ft lbs / 28 - 40 Nm
-16	27 - 35 ft lbs / 37 - 48 Nm
-20	35 - 46 ft lbs / 48 - 62 Nm
-24	46 - 58 ft lbs / 62 - 79 Nm
-32	54 - 66 ft lbs / 73 - 90 Nm
-40	79 - 91 ft lbs / 107 -124 Nm
-48	138 - 150 ft lbs / 186 - 203 Nm

https://truckmanualshub.com/

Specifications

Code 62	
SAE Dash Size	**Torque**
-8	15 - 18 ft lbs / 20 - 25 Nm
-12	25 - 33 ft lbs / 34 - 45 Nm
-16	41 - 50 ft lbs / 56 - 68 Nm
-20	63 - 75 ft lbs / 85 - 102 Nm
-24	116 - 133 ft lbs / 158 - 181 Nm
-32	200 - 217 ft lbs / 271 - 294 Nm

Torque Procedure

ORFS fittings

1 Replace the O-ring. The O-ring must be replaced anytime the seal has been broken. The O-ring cannot be re-used if the fitting or hose end has been tightened beyond finger tight.

2 Lubricate the O-ring before installation.

3 Be sure the O-ring face seal is seated and retained properly.

4 Position the tube and nut squarely on the face seal end of the fitting, and tighten the nut finger tight.

5 Tighten the nut or fitting to the appropriate torque. Refer to the appropriate torque chart in this section.

6 Operate all machine functions and inspect the hose, fittings and related components to confirm there are no leaks.

JIC 37° fittings

1 Tighten the nut or fitting to the appropriate torque. Refer to the appropriate torque chart in this section.

2 Operate all machine functions and inspect the hose, fittings and related components to confirm there are no leaks.

https://truckmanualshub.com/

Repair Procedures

Observe and Obey:

☑ Repair procedures shall be completed by a person trained and qualified on the repair of this machine.

☑ Immediately tag and remove from service a damaged or malfunctioning machine.

☑ Repair any machine damage or malfunction before operating the machine.

Before Repairs Start:

☑ Read, understand and obey the safety rules and operating instructions in the appropriate operator's manual on your machine.

☑ Be sure that all necessary tools and parts are available and ready for use.

☑ Use only Genie approved replacement parts.

☑ Read each procedure completely and adhere to the instructions. Attempting shortcuts may produce hazardous conditions.

Machine Configuration:

☑ Unless otherwise specified, perform each repair procedure with the machine in the following configuration:

- Machine parked on a firm, level surface
- Boom in the stowed position
- Key switch in the off position with the key removed
- Wheels chocked

https://truckmanualshub.com/

Repair Procedures

About This Section

Most of the procedures in this section should only be performed by trained service professional in a suitably equipped workshop. Select the appropriate repair procedure after troubleshooting the problem.

Perform disassembly procedures to the point where repairs can be completed. Then to re-assemble, perform the disassembly steps in reverse order.

Symbols Legend

Safety alert symbol—used to alert personnel to potential personal injury hazards. Obey all safety messages that follow this symbol to avoid possible injury or death.

DANGER Indicates a imminently hazardous situation which, if not avoided, will result in death or serious injury.

WARNING Indicates a potentially hazardous situation which, if not avoided, could result in death or serious injury.

CAUTION Indicates a potentially hazardous situation which, if not avoided, may cause minor or moderate injury.

NOTICE Indicates a potentially hazardous situation which, if not avoided, may result in property damage.

⊙ Indicates that a specific result is expected after performing a series of steps.

⊠ Indicates that an incorrect result has occurred after performing a series of steps.

https://truckmanualshub.com/

1-1 Boom Proximity Switch

The boom angle switch is a proximity switch. This switch functions by sensing a change in the electromagnetic field of the switch, due to the introduction of metal into the field. A proximity switch is, simply, a metal detector.

The switch generates an electromagnetic field at the face of the switch. This field senses when steel has been moved close to the switch as well as when the steel has been moved away, which is how the switch contacts open and close.

These switches are of a fail-safe design. Should the switch or the switch wire circuit be faulty, the machine will not function outside its designed range of use.

The boom proximity switch is a component of the drive circuit and the chassis sway circuit. Both the drive and the chassis sway functions are disabled when the boom is raised to 50° or higher.

How to Test a Proximity Switch

1 Remove the switch from the machine. Do not disconnect the switch wire harness from the machine.

2 Start the engine.

3 Move the switch away from any ferrous or metallic object

⊙ Result: The light of the limit switch assembly is not illuminated.

4 Move the switch close to any ferrous or metallic object

⊙ Result: The light of the proximity switch assembly turns on. The switch is functioning correctly.

https://truckmanualshub.com/

Boom Components

How to Adjust the Boom Angle Proximity Switch

The boom angle proximity switch is attached to a mounting bracket, located between the boom and the chassis directly beneath the boom pivot pin. The switch location is adjustable.

1 Start the engine.

2 Raise the boom to 50°. Confirm with a digital level.

3 Working at the pivot end of the boom, locate the boom angle proximity switch. Loosen the fasteners, securing the proximity switch assembly to the chassis, just enough to allow the bracket to move.

4 Move the proximity switch assembly until the light of the proximity switch turns on, then move the proximity switch assembly until the light of the proximity switch just turns off.

5 Securely tighten the fasteners. Do not over tighten.

6 Lower the machine to 45°.

⊙ Result: The light of the proximity switch assembly is illuminated.

7 Raise the boom to 50°. Confirm with a digital level.

⊙ Result: The light of the proximity switch assembly is not illuminated. The proximity switch is properly calibrated.

⊠ Result: The light of the proximity switch assembly is illuminated. The proximity switch is not calibrated correctly. Repeat this procedure beginning with step 4.

How to Adjust the Boom Extend Proximity Switch

The boom extend proximity switch assembly is secured to the top surface of the number 0 boom tube at the center of the boom. The proximity switch assembly is fixed in position and is not adjustable.

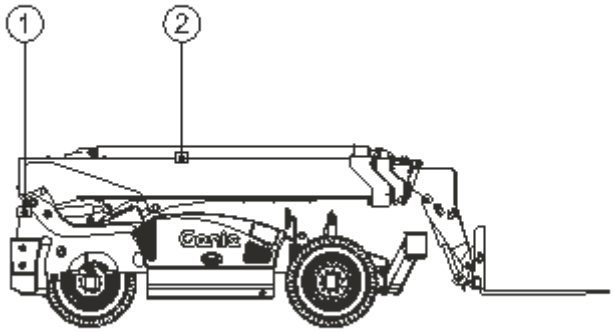

1 Boom angle proximity switch
2 Boom extend proximity switch

https://truckmanualshub.com/

1-2 Boom

How to Replace the Boom Wear Pads

1 **Lower wear pads**: Using a lifting strap from an overhead crane or a fork lift of sufficient capacity, lift the boom tube just enough to remove the weight from the pads.

2 Remove the wear pad mounting fasteners and remove the wear pads from the boom.

3 Lubricate the wear surface of the new pads. Refer to Maintenance Procedure in the appropriate Service or Maintenance Manual for your machine, *Lubricate the Boom*.

Note: Do not lubricate the side wear pads.

4 Install the wear pads. Install and securely tighten the fasteners. Do not over tighten.

How to Remove the Lifting Fork Frame

1 With the boom in the stowed position, attach a lifting strap from an overhead crane to the top of the lifting fork frame at the front of the boom. Support the frame. Do not apply any lifting pressure.

2 Working from the rear of the frame, lift the spring-assisted handle of the lock securing the lower fork frame lock pin to the fork frame mount. Use a soft metal drift to remove the pin.

3 Using the overhead crane, lift and remove the fork frame from the boom.

⚠ CAUTION Crushing hazard. The fork frame could fall if not properly supported when the lock pin is removed from the machine.

https://truckmanualshub.com/

Boom Components

How to remove the Cable Track Assembly

Note: Perform this procedure on a firm, level surface with the machine in the stowed position and the wheels chocked.

1 Remove the access cover at the fork end of the boom and set aside.

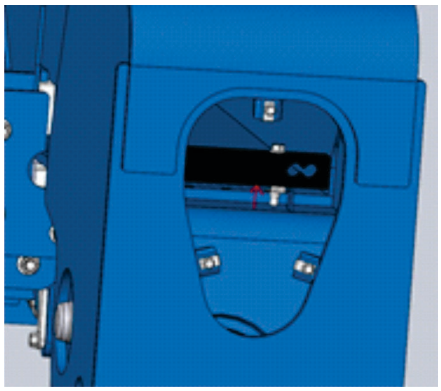

2 Remove the hose clamp securing the hydraulic hoses inside the boom tube and set aside.

3 Tag, disconnect and plug the hydraulic hoses. Cap the fittings.

WARNING Bodily injury hazard. Spraying hydraulic oil can penetrate and burn skin. Loosen hydraulic connections very slowly to allow the oil pressure to dissipate gradually. Do not allow oil to squirt or spray.

4 Remove the cable track access cover at the pivot end of the boom and set aside.

5 Loosen the retaining fasteners securing the rear hydraulic hose clamp. Do not remove the retaining fasteners at this time.

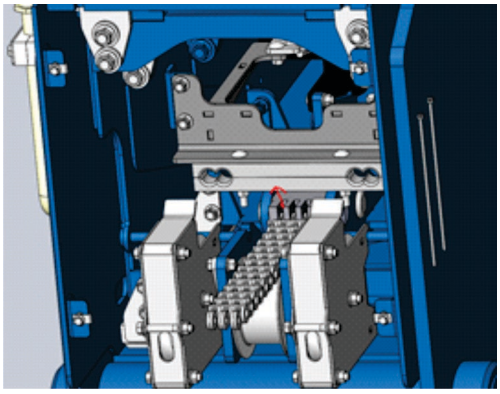

6 Remove both hose reel assemblies and set aside.

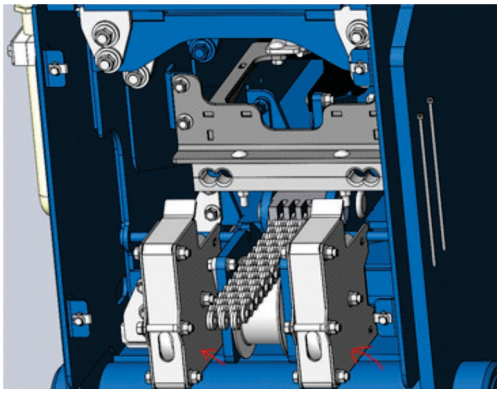

https://truckmanualshub.com/

7 Locate the hydraulic hard lines under the boom assembly. Tag, disconnect and plug the hydraulic hoses from the bulkhead fittings.

Note: Do not disconnect the hard lines from the bulkhead fittings.

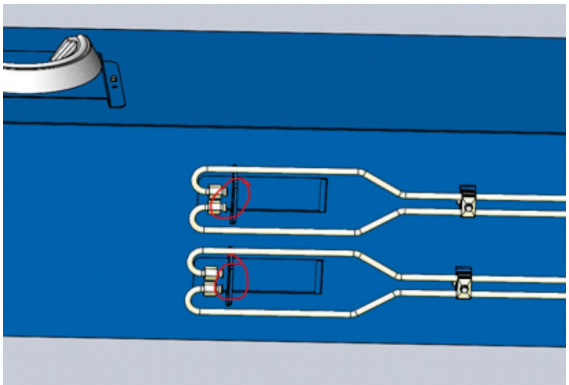

8 Working at the pivot end of the boom, pull the hydraulic hoses out of the boom tube.

9 Remove the four retaining fasteners securing the cable track mount to the boom.

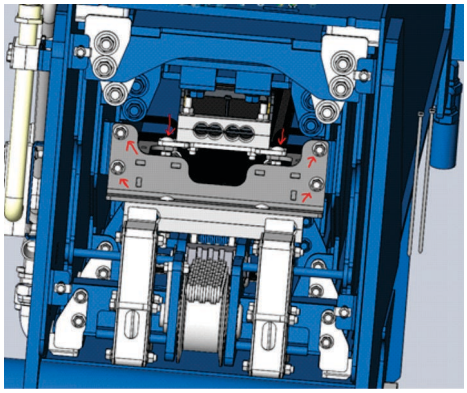

10 Pull the cable track mount towards the pivot end of the boom until the two retaining fasteners securing the cable track mounting plate are accessible. Remove the retaining fasteners.

11 Pull the cable track out far enough to mark the hydraulic hoses next to the upper hose clamp on the cable track side of the clamp.

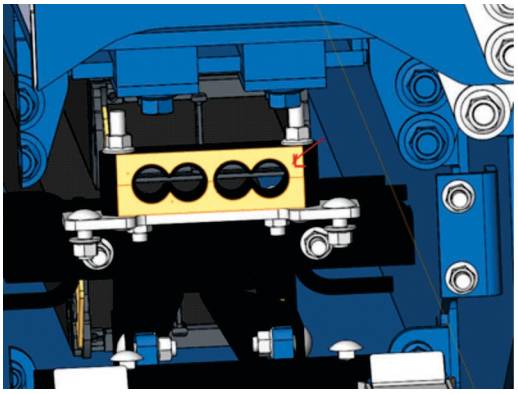

12 Remove the bracket attached to the cable track and clamp.

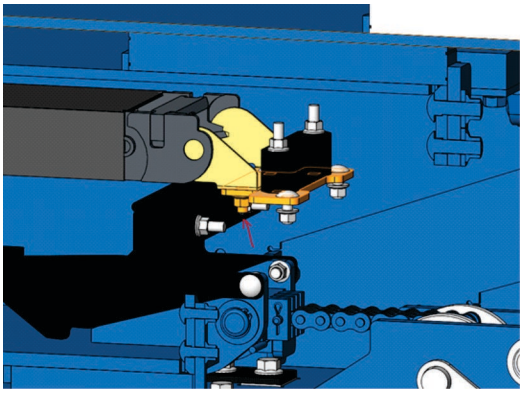

13 Working from the pivot end, push the cable track with the twin lines still clamped to it via the cable track mount plate until the cable track is lying completely flat inside of the boom.

https://truckmanualshub.com/

Boom Components

14 Loosen fasteners and remove clamp half to on the lower cable track mount in order to free up the hose loop.

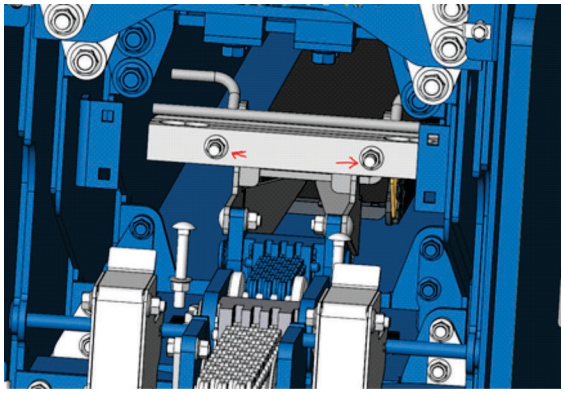

15 Remove fasteners securing the lower cable track mount to the boom. Pull the lower mount out of the boom with the cable track attached to it.

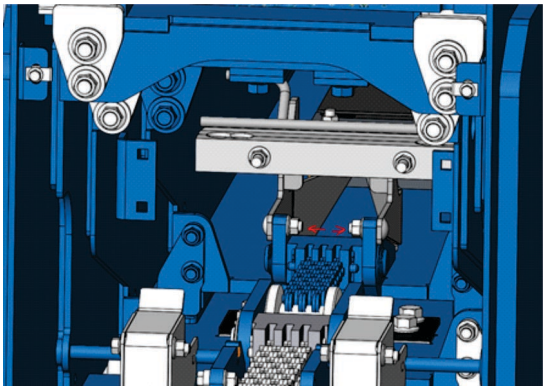

How to Install the Cable Track Assembly

Note: Verify the boom is fully retracted. If it is not fully retracted, the twin hydraulic hoses that go to the horse head will kink when the boom fully retracts.

1 Lay cable track flat on the ground. If you are replacing the twin hydraulic hoses, use the hydraulic hoses that you removed to measure where the clamp marks need to be on the replacement hoses. The mark should be approximately 191" from very end of the hose fittings where they connect to the hardlines.

2 Push both sets of hydraulic hoses through the cable track to the approximate position they need to be for clamping.

3 Insert the cable track into the small boom tube keeping it flat until the cable track end is past the lower lug of the small boom. Then begin curling the cable bridge in on itself with the radius of the cable track inside of the small boom.

4 After the cable track is inserted, pull the top and bottom of the cable track over the lugs to attach the upper cable track mount plate and lower cable track mount to the cable track.

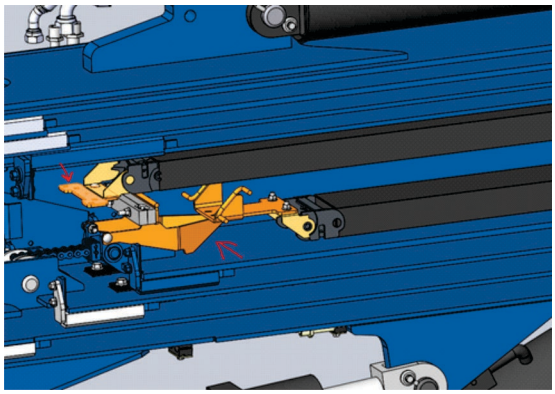

https://truckmanualshub.com/

5 Attach narrow hose clamps to the mounting plate. Line up the mark from the previous steps with the face of the clamp that is farthest away from the cable track.

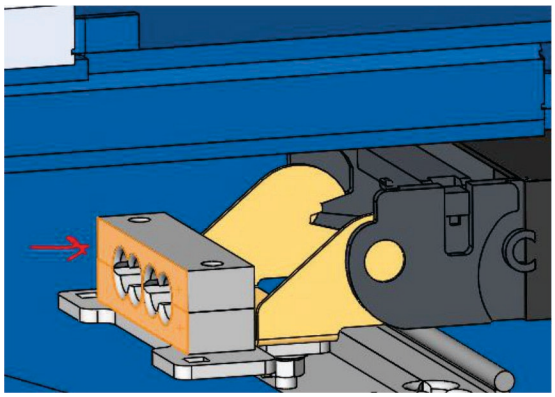

6 Working with the hydraulic hoses that will end up at the fork end of the boom, wrap the hoses in a loop around the lower mounting plate and push them the rest of the way towards the front of the boom. The hoses should just reach past the mounting bracket in the front of the horsehead.

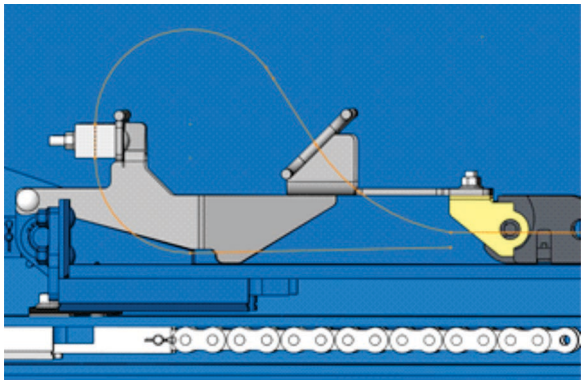

7 At the front of the horsehead, attach the hose clamps through the mounting bracket. Do not tighten at this time.

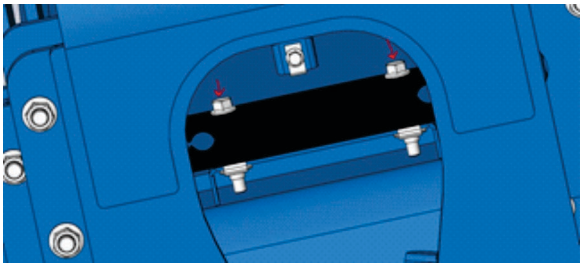

8 At the pivot end of the boom, fasten the lower cable track mount to the retract lug.

Note: Verify the hose loop that goes around the lower mounting bracket is not rubbing or pushed up against the boom sides or top and is seated well in the clamp.

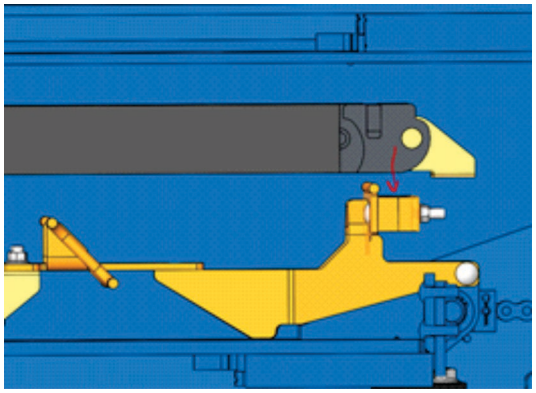

9 Attach the hose clamps to the lower mount.

10 Fasten the cable track mount to the top mounting plate. Install the hose clamps.

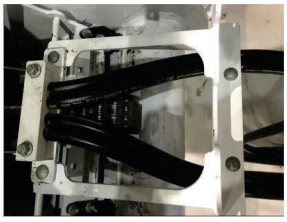

https://truckmanualshub.com/

Boom Components

11 Push the cable track with the hydraulic hoses into the boom and loop the hoses that will connect to the hardlines up or to the side so that they are out of the way. Do not secure the cable track boom mount to the boom tube mount.

12 With the hoses pushed out of the way, install the welded components of both hose reels.

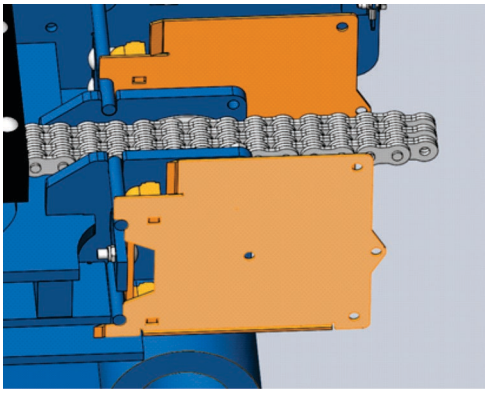

13 Install both hose reel assemblies. Route the hoses around the reels and push them towards the opening in the bottom of the large boom tube.

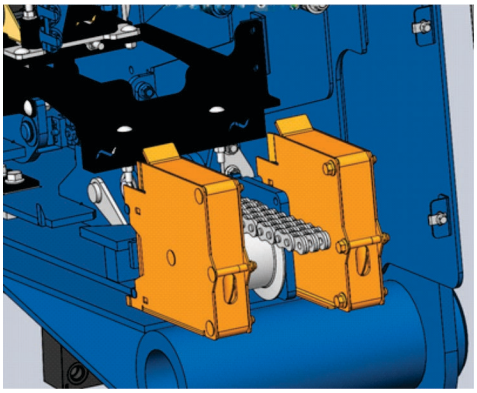

14 Attach the hydraulic hoses to the hardlines located at the bottom of the boom.

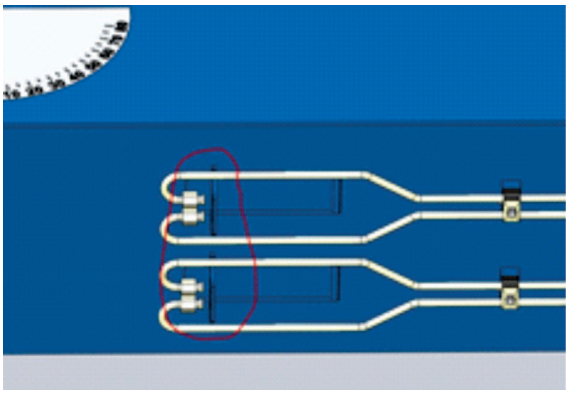

15 Install the top cable track boom mount to the brackets in the middle of the small boom.

Note: There should be some tension on the hydraulic hoses as they come around the hose reels.

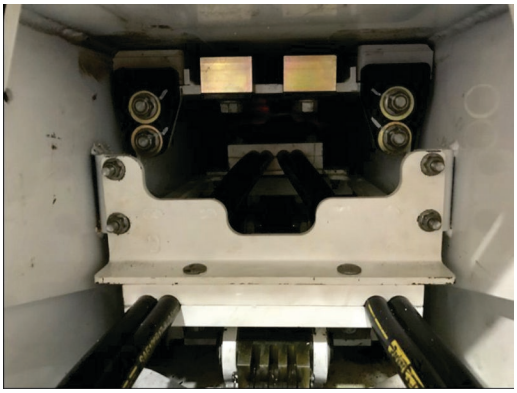

https://truckmanualshub.com/

16 Working at the fork end of the boom, pull on the hydraulic hoses to remove any excess slack in the boom and cable track. Tighten the hose clamps in the horsehead.

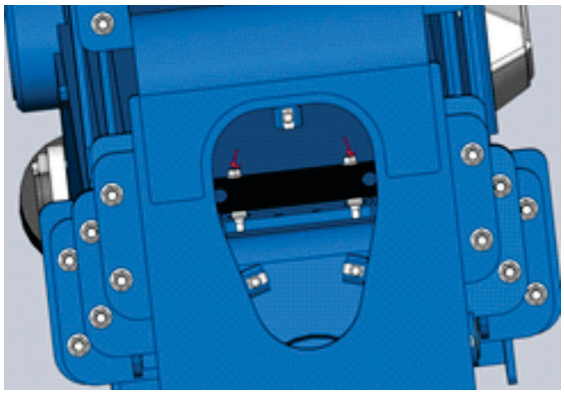

17 Connect the hydraulic hoses to the auxiliary ports and tilt cylinder.

18 Start the machine and fully extend and retract the boom through a couple of cycles.Turn the machine off.

19 Inspect the cable track components for loose fasteners or damage. Verify the hydraulic hoses are tight and not kinked. If required, loosen the hose clamps and pull on the hoses to remove any excess slack to readjust the hoses.

How to Replace the Retract Chains

Note: Perform this procedure with the machine on a firm, level surface.

1 Start the engine and raise the boom to the horizontal position.

2 Extend the boom approximately 1 inch / 2,5 cm. Turn the machine off.

3 Working at the pivot end of the boom, remove the cable track top mounting bracket to allow access to the 1-2-3 chain anchor.

Note: It may also be necessary to remove parts of the hose reel assemblies.

NOTICE Component damage hazard. Hoses can be damaged when the hose reels and clamps are not installed. Verify the hoses do not become pinched or bundled up when instructed to extend or retract the boom.

4 Using a soft metal drift, remove the pins that secure the retract chain anchors to the boom lugs. Note the orientation.

5 Remove the anchors from the chains.

Note: Always replace the cotter pin with a new one.

https://truckmanualshub.com/

Boom Components

6 Secure a rope to the end of the chain being replaced.

Note: Verify the rope is securely attached to the chain. If the rope becomes disconnected from the chain during the removal process, installation will be extremely difficult.

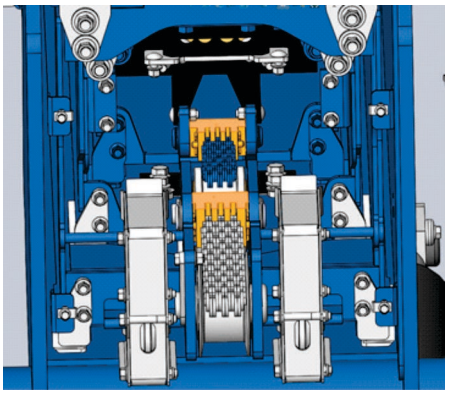

7 Start the machine. Extend the boom approximately 12 inches / 30,5 cm so the fasteners for the 1-2-3 retract anchor on boom tube number 1 in the front are visible. Turn the engine off.

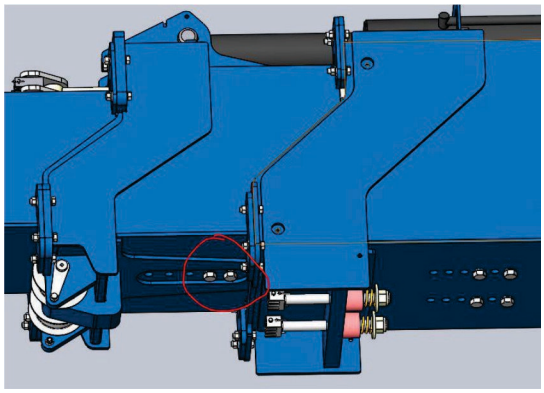

8 Remove the top, front wear pads that are between the boom tube number 0, 1, and 2.

Note: This step is not required if only replacing the 1-2-3 retract chain.

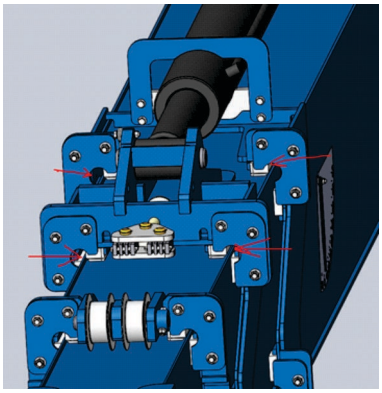

9 Using an overhead lifting device, slowly lift the #1 and #2 booms to remove the gap where the upper wear pads was removed from.

Note: This step is not required if only replacing the 1-2-3 retract chain.

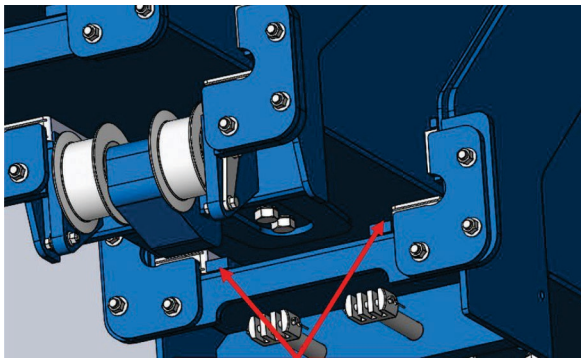

https://truckmanualshub.com/

Boom Components

10 Use hook or a 3/8-16 UNC threaded rod to secure the retract anchors.

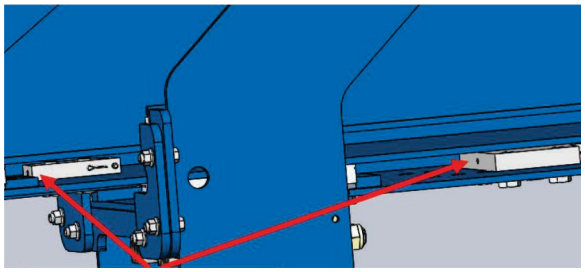

11 Remove the retaining fasteners securing the chain anchors. Pull the chain anchors out the front of the boom with the chains attached.

Note: The retaining fasteners for the front anchors were torqued and must be replaced.

CAUTION Bodily injury hazard. The chain will begin falling out of the boom on its own after a certain amount has been removed and not properly supported by the rope when it is removed from the machine.

12 Remove chain anchors from chain.

13 Attach the chain anchors to the chain.

Note: Always replace the cotter pin with a new one.

14 Attach the chain to the rope running through the boom.

15 Attach a 3/8-16 UNC threaded rod to chain anchor.

16 Working at the fork end of the boom, use the rope to carefully pull the chain through the boom just until the end of the chain is accessible. Remove the rope from the chain.

17 Secure the chain anchors to the holes closest to the pivot end of the boom.

Torque= 475 ft-lbs / 644 Nm.

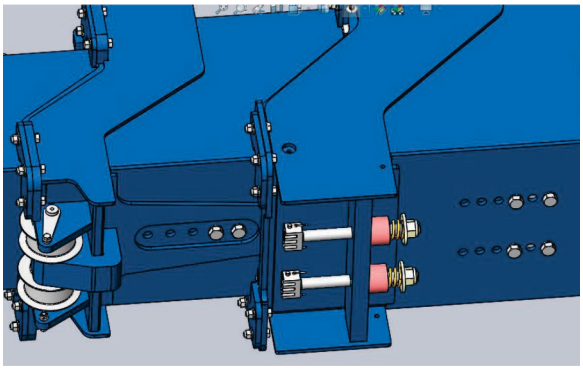

18 Remove the shims or block put in place between the boom tube number 0 and 1.

Note: This step is not required if only replacing the 1-2-3 retract chain.

19 Lower the boom down onto the wear pads.

20 Install the wear pads on the top front of boom tube number 0 and boom tube number 1.

21 Loosen and extend chain anchors on the top of boom tube number 1 and bottom of boom tube number 0.

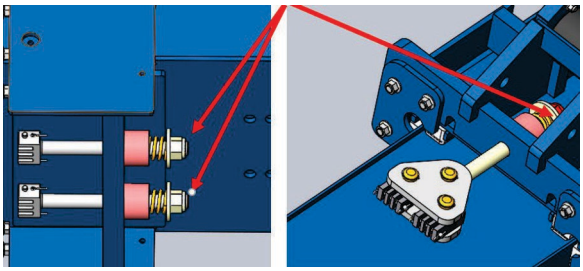

https://truckmanualshub.com/

Boom Components

22 Use a combination of a forklift pushing on the horsehead and the extend cylinder to fully stow the boom.

Note: The loosened extend chains should allow the boom to stow farther than in normal operation and allow some extra slack on the retract chains for installation.

23 Remove the rope from the chains and install the chain anchors.

24 Install the retract chain anchors to the boom. Tighten the extend chain anchors.

25 Adjust the chains. Refer to the Maintenance Procedure in the appropriate Maintenance Manual for your machine, *Adjust the Boom Sequencing Chains*.

NOTICE Component damage hazard. Chains can be damaged if the boom is operated when the chains are not properly adjusted.

How to Replace the Extend Chains

Note: Perform this procedure with the machine on a firm, level surface.

1 Start the machine and raise the boom to a horizontal position.

2 Extend the boom 10 inches / 25,4 cm. Turn the machine off.

Note: This step is not required if only replacing the 1-2-3 extend chain.

3 Remove the upper rear wear pads between the #1 and #3 booms.

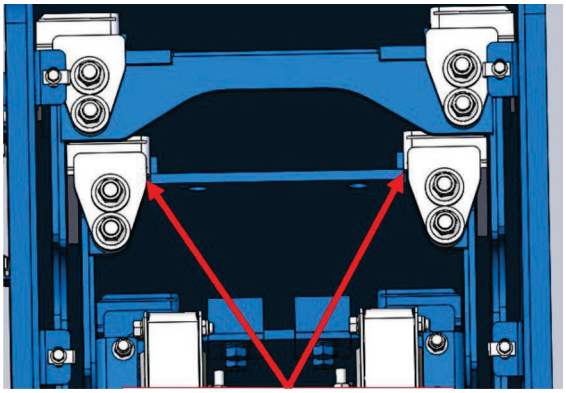

4 Working at the pivot end of the boom, remove the cable track top mounting bracket to allow access to the 1-2-3 chain anchor.

Note: This step is not required if only replacing the 1-2-3 extend chain.

Note: It may also be necessary to remove parts of the hose reel assemblies.

NOTICE Component damage hazard. Hoses can be damaged when the hose reels and clamps are not installed. Verify the hoses do not become pinched or bundled up when instructed to extend or retract the boom.

https://truckmanualshub.com/

Boom Components

5 Start the machine and retract the boom 8 inches / 20,3 cm.

Note: This step is not required if only replacing the 1-2-3 extend chain.

Note: Verify the retaining fasteners that hold the 0-1-2 chain anchor is accessible.

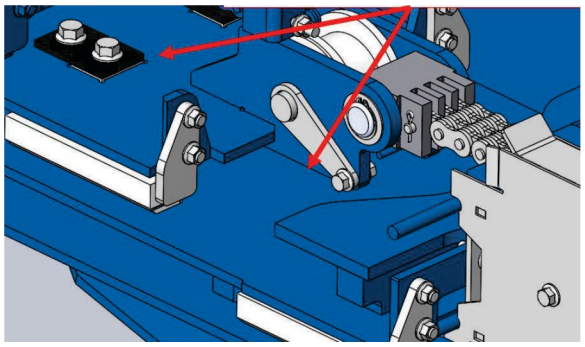

6 Working at the fork end of the boom, loosen the chain anchors and disconnect them from the chains.

Note: Always replace the cotter pin with a new one.

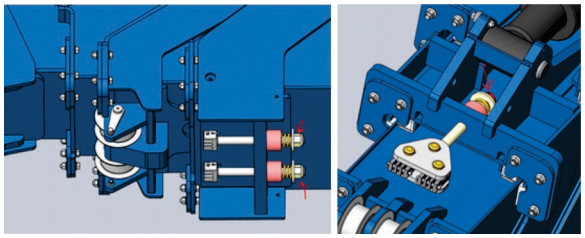

7 Secure a rope to the end of the chain being replaced.

Note: Verify the rope is securely attached to the chain. If the rope becomes disconnected from the chain during the removal process, installation will be extremely difficult.

8 At the pivot end of the boom, remove retaining fasteners securing the step anchors.

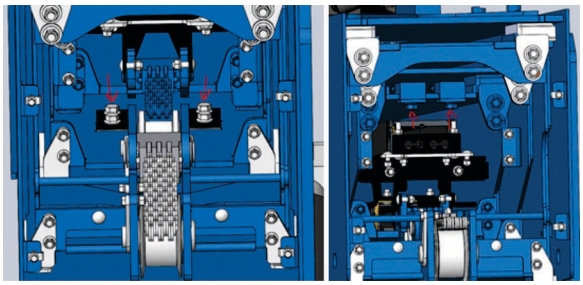

9 To replace the lower (0-1-2) extend chains, use a pry-bar at the pivot end of the boom to lift the back edge of the number 2 boom tube up. Use blocks or shims to chock the boom tube up.

Note: This step is not required if only replacing the 1-2-3 extend chain.

10 Remove the chain from the boom.

⚠ CAUTION Bodily injury hazard. The chain will begin falling out of the boom on its own after a certain amount has been removed and not properly supported by the rope when it is removed from the machine.

11 Remove the step anchors from the chain.

12 Attach the step anchors to the chain.

Note: Always replace the cotter pin with a new one.

13 Attach the chain to the rope running through the boom.

14 Working at the fork end of the boom, use the rope to carefully pull the chain through the boom just until the end of the chain is accessible. Remove the rope from the chain.

https://truckmanualshub.com/

Boom Components

15 Secure the step anchors to the boom.

16 Remove the blocks or shims used to chock up the number 2 boom tube.

17 Start the machine and fully retract the boom. Turn the machine off.

18 At the fork end of the boom, attach the chain anchors to the chains.

Note: Always replace the cotter pin with a new one.

19 Working at the pivot end of the boom, install the cable track mount and hose reels.

20 Start the machine and extend the boom 10 inches / 25,4 cm. Turn the machine off.

21 Install the upper rear wear pads between the boom tube number 1 and 2. Tighten the extend chain anchors.

22 Adjust the chains. Refer to the Maintenance Procedure in the appropriate Maintenance Manual for your machine, *Adjust the Boom Sequencing Chains*.

NOTICE Component damage hazard. Chains can be damaged if the boom is operated when the chains are not properly adjusted.

How to Remove the Boom

WARNING Bodily injury hazard. This procedure requires specific repair skills, lifting equipment and a suitable workshop. Attempting this procedure without these skills and tools could result in death or serious injury and significant component damage. Dealer service is strongly recommended.

Note: When removing a hose assembly or fitting, the O-ring (if equipped) on the fitting and/or hose end must be replaced. All connections must be torqued to specification during installation. Refer to Specifications, *Hydraulic Hose and Fitting Torque Specifications.*

1 Remove the lifting fork and frame. Refer to Repair Procedure, *How to Remove the Lifting Fork Frame.*

2 Attach a lifting strap from an overhead 10 ton / 10,000 kg crane to the fork end of the boom. Support the boom. Do not apply any lifting pressure.

3 Select a fork level cylinder. Remove the fasteners securing the fork level cylinder rod-end pivot pin to the boom.

4 Using a lifting strap from another overhead crane, support the rod-end of the fork level cylinder. Do not apply any lifting pressure.

5 Use a soft metal drift to remove the fork level cylinder pivot pin.

https://truckmanualshub.com/

6 Lower the fork level cylinder onto the chassis.

WARNING Crushing hazard. Keep hands clear of the cylinder manifold when lowering the cylinder.

7 Repeat this procedure beginning with step 3 for the other fork level cylinder.

8 Select a lift cylinder. Tag, disconnect and plug the hydraulic hoses at the lift cylinder manifold. Cap the fittings on the cylinder manifold.

9 Remove the fasteners securing the lift cylinder barrel-end pivot pin to the chassis.

10 Support and secure the barrel end of the lift cylinder to the boom.

11 Use a soft metal drift to remove the lift cylinder pivot pin.

12 Repeat this procedure beginning with step 8 for the other lift cylinder.

13 Tag, disconnect and plug the hydraulic hoses at the hydraulic hard line connections at the pivot end of the boom. Cap the fittings.

14 Using the overhead crane, raise the boom to a horizontal position.

WARNING Crushing hazard. The lift cylinder will fall if not properly supported when the boom is raised.

15 Remove the fasteners securing the boom pivot pin to the chassis.

16 Use a soft metal drift to remove the boom pivot pin.

DANGER Crushing hazard. The boom will fall if not properly supported when the pivot pin is removed from the machine.

17 Carefully remove the boom assembly from the machine and place it on a structure capable of supporting it.

DANGER Crushing hazard. The boom could become unbalanced and fall if not properly supported when removed from the machine.

NOTICE Component damage hazard. The weight of the boom assembly may crush the hydraulic hard lines under the boom. Use caution when placing the boom assembly onto a structure capable of supporting it.

https://truckmanualshub.com/

Boom Components

How to Disassemble the Boom - GTH1056

WARNING Bodily injury hazard. This procedure requires specific repair skills, lifting equipment and a suitable workshop. Attempting this procedure without these skills and tools could result in death or serious injury and significant component damage. Dealer service is strongly recommended.

Note: When removing a hose assembly or fitting, the O-ring (if equipped) on the fitting and/or hose end must be replaced. All connections must be torqued to specification during installation. Refer to Specifications, *Hydraulic Hose and Fitting Torque Specifications.*

1 Remove the extension cylinder. Refer to Repair Procedure, *How to Remove the Extension Cylinder*.

2 Remove the boom. Refer to Repair Procedure, *How to Remove the Boom*.

3 Select a lift cylinder. Remove the fasteners securing the lift cylinder rod-end pivot pin to the boom.

4 Using a lifting strap from an overhead crane, support the lift cylinder. Do not apply any lifting pressure.

5 Use a soft metal drift to remove the lift cylinder rod-end pivot pin. Remove the cylinder from the boom.

WARNING Crushing hazard. The cylinder could become unbalanced and fall if not properly supported when removed from the machine.

6 Repeat this procedure beginning with step 3 for the other lift cylinder.

7 Remove the fastener securing the fork level cylinder rod-end pivot pin to the fork frame mount.

8 Use a soft metal drift to remove the rod-end pivot pin.

9 Attach a lifting strap from an overhead crane to the barrel end of the fork level cylinder. Support the cylinder. Do not apply any lifting pressure.

10 Tag, disconnect and plug the fork level cylinder hoses from the cylinder manifolds. Cap the fittings.

WARNING Bodily injury hazard. Spraying hydraulic oil can penetrate and burn skin. Loosen hydraulic connections very slowly to allow the oil pressure to dissipate gradually. Do not allow oil to squirt or spray.

NOTICE Component damage hazard. Hoses can be damaged if they are kinked or pinched.

11 Remove the fasteners securing the fork level cylinder barrel-end pivot pin to the boom.

12 Use a soft metal drift to remove the pivot pin. Remove the cylinder from the machine.

WARNING Crushing hazard. The cylinder could fall if not properly supported when the pivot pin is removed from the machine.

13 Remove the inspection cover at the pivot end of the boom.

https://truckmanualshub.com/

14 Working at the pivot end of the boom, remove the hose keepers from the hose roller assembly.

Note: The hose keepers ensure that the hoses do not jump off the hose rollers.

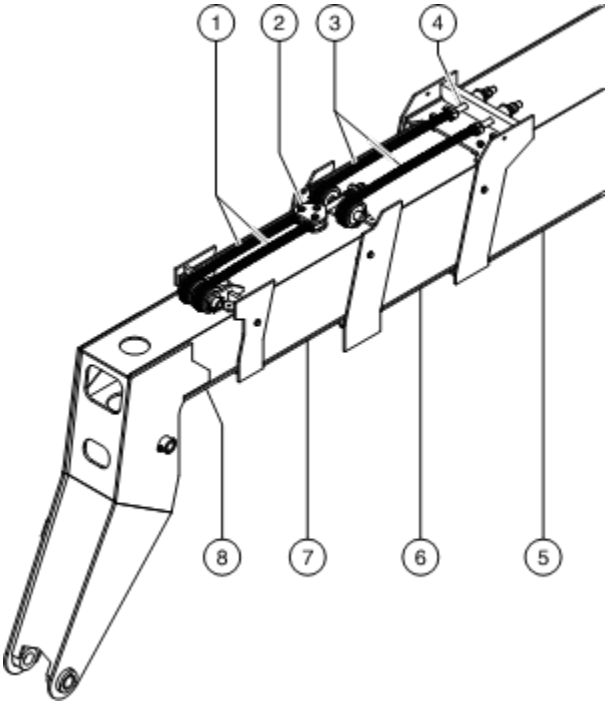

1 tube 3 extension chains
2 dual-chain tensioner
3 tube 2 extension chains
4 single-chain tensioner
5 boom tube number 0
6 boom tube number 1
7 boom tube number 2
8 boom tube number 3

15 Working at the pivot end of the boom, remove the fasteners securing the hose roller assembly to boom tube number 1. Remove the hose roller assembly from the boom.

16 Working at the pivot end of the boom, remove the fasteners securing the cable track mount brackets to the boom assembly. Remove the cable track from boom.

17 Working at the fork end of the boom, tag, disconnect and plug the hydraulic hoses at the hard lines that run under the boom. Cap the fittings.

18 Working at the fork end of the boom, remove the fasteners securing the twin line clamps to the boom.

Note: Pay attention to how the hoses are routed before removing the slider from the boom.

Note: Remove and cap the small "whipper hoses" from the twin lines and to label everything. See the instructions on "Removing the cable track assembly".

19 Working at the pivot end of the boom, carefully remove the cable bridge from the boom.

20 Working at the fork end of the boom, remove the fasteners securing the dual-chain tensioner to the top of boom tube number 1.

21 Working at the fork end of the boom, remove the fasteners securing the extension chain rollers to the top of boom tube number 2. Remove the chain rollers from the boom.

22 Working at the pivot end of the boom, remove the fasteners securing the retraction chain block pivot pin to boom tube number 3. Remove the pivot pin.

23 Working at the fork end of the boom, remove the wear pads from boom tube number 2.

24 Support and slide boom tube number 3 out of boom tube number 2. Place boom tube number 3 on a structure capable of supporting it.

⚠ WARNING Crushing hazard. Boom tube number 3 could become unbalanced and fall when removed from the boom tube number 2 if not properly supported and attached to the overhead crane.

Note: During removal, the overhead crane strap will need to be adjusted for proper balancing.

25 Working at the fork end of the boom, loosen evenly, then remove, the fasteners securing

https://truckmanualshub.com/

Boom Components

the chain tensioners to the bottom of boom tube number 0.

26 Working at the fork end of the boom, remove the fasteners securing the extension chain rollers to the bottom of boom tube number 1. Remove the chain rollers from the boom.

27 Working at the pivot end of the boom, remove the fasteners securing the retraction chain block pivot pin to boom tube number 2. Remove the pivot pin.

28 Working at the pivot end of the boom, remove the fasteners securing the chain roller to boom tube number 2. Remove the chain roller from the boom.

29 Working at the fork end of the boom, remove the wear pads from boom tube number 1.

30 Support and slide boom tube number 2 out of boom tube number 1. Place boom tube number 2 on a structure capable of supporting it.

⚠ WARNING Crushing hazard. Boom tube number 2 could become unbalanced and fall when removed from the boom tube number 1 if not properly supported and attached to the overhead crane.

Note: During removal, the overhead crane strap will need to be adjusted for proper balancing.

31 Working at the pivot end of the boom, remove the fasteners securing the chain roller to boom tube number 1. Remove the chain roller from the boom.

32 Working at the fork end of the boom, remove the wear pads from boom tube number 0.

33 Support and slide boom tube number 1 out of boom tube number 0. Place boom tube number 1 on a structure capable of supporting it.

⚠ WARNING Crushing hazard. Boom tube number 1 could become unbalanced and fall when removed from the boom tube number 0 if not properly supported and attached to the overhead crane.

Note: During removal, the overhead crane strap will need to be adjusted for proper balancing.

https://truckmanualshub.com/

1-3
Boom Lift Cylinder

How to Remove the Lift Cylinder

Note: When removing a hose assembly or fitting, the O-ring (if equipped) on the fitting and/or hose end must be replaced. All connections must be torqued to specification during installation. Refer to Specifications, *Hydraulic Hose and Fitting Torque Specifications.*

1 Attach a lifting strap from an overhead 5 ton / 5,000 kg supporting device to the fork end of the boom. Support the boom. Do not apply any lifting pressure.

2 Tag, disconnect and plug the hydraulic hoses at the lift cylinder manifold. Cap the fittings.

WARNING Bodily injury hazard. Spraying hydraulic oil can penetrate and burn skin. Loosen hydraulic connections very slowly to allow the oil pressure to dissipate gradually. Do not allow oil to squirt or spray.

NOTICE Component damage hazard. Hoses can be damaged if they are kinked or pinched.

3 Attach a lifting strap from an overhead crane to the rod end of the lift cylinder. Support the cylinder. Do not apply any lifting pressure.

4 Remove the fasteners securing the lift cylinder barrel-end pivot pin to the chassis.

5 Use a soft metal drift to remove the pivot pin.

6 Remove the fasteners securing the lift cylinder rod-end pivot pin to the boom.

7 Use a soft metal drift to remove the pivot pin.

DANGER Crushing hazard. The boom will fall if not properly supported when the pivot pin is removed from the machine.

8 Using the overhead crane, raise the boom from the horizontal position. Remove the cylinder from the machine.

DANGER Crushing hazard. The cylinder will fall if not properly supported when removed from the machine.

https://truckmanualshub.com/

Boom Components

1-4 Boom Extension Cylinder

How to Remove the Extension Cylinder

Note: When removing a hose assembly or fitting, the O-ring (if equipped) on the fitting and/or hose end must be replaced. All connections must be torqued to specification during installation. Refer to Specifications, *Hydraulic Hose and Fitting Torque Specifications.*

1 Raise the boom to a horizontal position.

2 Tag, disconnect and plug the hydraulic hoses at the boom extension cylinder manifold. Cap the fittings.

WARNING Bodily injury hazard. Spraying hydraulic oil can penetrate and burn skin. Loosen hydraulic connections very slowly to allow the oil pressure to dissipate gradually. Do not allow oil to squirt or spray.

NOTICE Component damage hazard. Hoses can be damaged if they are kinked or pinched.

3 Attach a lifting strap from an overhead crane to the center point of the boom extension cylinder. Support the cylinder. Do not apply any lifting pressure.

4 Remove the extension cylinder support loop from the underside of the boom.

Note: The extension cylinder support loop is located at the fork end of the boom.

5 Remove the fasteners securing the extension cylinder pivot pins to the boom.

6 Use a soft metal drift to remove both pivot pins. Remove the cylinder from the machine.

DANGER Crushing hazard. The boom will fall if not properly supported when the pivot pins are removed from the machine.

Note: During removal, the overhead crane strap will need to be adjusted for proper balancing.

https://truckmanualshub.com/

1-5
Fork Level Cylinder

How to Remove the Fork Level Cylinder

Note: When removing a hose assembly or fitting, the O-ring (if equipped) on the fitting and/or hose end must be replaced. All connections must be torqued to specification during installation. Refer to Specifications, *Hydraulic Hose and Fitting Torque Specifications.*

1 Remove the lifting fork frame. Refer to Repair Procedure, *How to Remove the Lifting Fork Frame*.

2 Remove the fastener securing the fork level cylinder rod-end pivot pin to the fork frame mount.

3 Use a soft metal drift to remove the pivot pin.

4 Attach a lifting strap from an overhead crane to the barrel end of the fork level cylinder. Support the cylinder. Do not apply any lifting pressure.

5 Tag, disconnect and plug the fork level cylinder hoses from the cylinder manifolds. Cap the fittings.

WARNING Bodily injury hazard. Spraying hydraulic oil can penetrate and burn skin. Loosen hydraulic connections very slowly to allow the oil pressure to dissipate gradually. Do not allow oil to squirt or spray.

NOTICE Component damage hazard. Hoses can be damaged if they are kinked or pinched.

6 Remove the fasteners securing the fork level cylinder barrel-end pivot pin to the boom.

7 Use a soft metal drift to remove the pivot pin. Remove the cylinder from the machine.

WARNING Crushing hazard. The cylinder could fall if not properly supported when the pivot pin is removed from the machine.

https://truckmanualshub.com/

Boom Components

1-6 Hydraulic Hoses

How to Replace the Fork Level and/or Auxiliary Cylinder Hoses, GTH-1056

Note: When removing a hose assembly or fitting, the O-ring (if equipped) on the fitting and/or hose end must be replaced. All connections must be torqued to specification during installation. Refer to Specifications, *Hydraulic Hose and Fitting Torque Specifications.*

Replace the lower hoses:

1 Fully retract the boom.

2 Fully lower the tips of the lifting forks.

3 Remove the covers from the pivot end of the boom.

4 Attach a lifting strap from an overhead crane to the top of the lifting fork frame. Support the frame. Do not apply any lifting pressure.

5 Working at the pivot end of the boom, remove the fasteners securing the cable track and mounts to the boom assembly.

6 Remove or loosen all the twin hose clamps. There are 3 sets at the pivot end of the boom and 1 in the horsehead.

7 Tag, disconnect and plug the hydraulic hoses that attach to the "Whipper" hoses in the horsehead that go to the tilt cylinder and auxiliary ports.

WARNING Bodily injury hazard. Spraying hydraulic oil can penetrate and burn skin. Loosen hydraulic connections very slowly to allow the oil pressure to dissipate gradually. Do not allow oil to squirt or spray.

NOTICE Component damage hazard. Hoses can be damaged if they are kinked or pinched.

8 Working near the center of the boom assembly, tag, disconnect and plug the hydraulic hoses from the hydraulic hard lines under boom tube number number 1. Cap the hard lines.

9 Securely connect a 40 feet / 12 m length of rope to the end of each hose disconnected in steps 6 and 7. Securely tie off the other end of each section of rope to the boom structure.

10 Working at the pivot end of the boom, select one of the hoses. Pull the hose out of the boom.

Note: Rope coming loose from either end of the hose or the boom during hose removal may result in a difficult reassembly. Be sure each section of rope is securely attached to both the hose and the boom structure before pulling the hose out of the boom.

11 Remove the rope from the hose. Discard the hose.

12 Install both ends of the hose assembly onto the correct connection points. Torque to specification. Refer to Specifications.

13 Repeat this procedure for the remaining hose to be replaced, beginning with step 9.

14 Install the cable bridge rear mount bracket onto the cable bridge and the boom assembly. Securely tighten the fasteners. Do not over tighten.

15 Remove the lifting strap from the fork frame.

16 Install the cover onto the rear of the boom. Install and securely tighten the retaining fasteners.

https://truckmanualshub.com/

Replace the upper hoses:

1 Fully retract the boom.

2 Fully lower the tips of the lifting forks.

3 Remove the covers from the pivot end of the boom.

4 Attach a lifting strap from an overhead crane to the top of the lifting fork frame. Support the frame. Do not apply any lifting pressure.

5 Working at the pivot end of the boom, remove the fasteners securing the cable bridge rear mount bracket to the boom assembly. Remove the bracket from the boom.

6 Tag, disconnect and plug the hydraulic hoses at the hard lines of the cable bridge. Cap the fittings.

WARNING Bodily injury hazard. Spraying hydraulic oil can penetrate and burn skin. Loosen hydraulic connections very slowly to allow the oil pressure to dissipate gradually. Do not allow oil to squirt or spray.

NOTICE Component damage hazard. Hoses can be damaged if they are kinked or pinched.

7 Return the cable bridge to its original position.

8 Working at the fork end of the boom, tag, disconnect and plug the fork level cylinder hoses at the cylinder manifolds. Cap the fittings.

9 **Models with auxiliary function**: Working at the fork end of the boom, tag, disconnect and plug the auxiliary hoses at the fittings. Cap the fittings.

10 Working at the fork end of the boom, remove the fasteners securing the cable bridge slider to the cable bridge. Remove the slider from the boom.

Note: Pay attention to how the hoses are routed before removing the slider from the boom.

Note: During reassembly, it may be helpful to use tape to secure the bolts to the cable bridge when installing the cable bridge slider.

11 Remove the fasteners securing the cable track to the cable track mount bracket.

12 Remove the fasteners securing the cable track mount bracket to the cable bridge. Remove the bracket from the boom.

13 Carefully pull the cable track through the opening at the front of boom until the hose connections are accessible.

14 Tag, disconnect and plug the affected hoses. Cap the fitting. Remove the hose from the cable track.

15 Install the new hose assembly and torque to specification. Refer to Specifications.

16 Install the cable bridge and cable track into the boom.

17 Install the cable track mount bracket and cable bridge slider. Securely tighten all fasteners. Do not over tighten.

18 Working at the pivot end of the boom, install the hydraulic hoses onto the hard lines of the cable bridge and torque to specification. Refer to Specifications.

19 Install the cable bridge mount bracket onto the cable bridge and the boom assembly. Securely tighten all fasteners. Do not over tighten.

20 Install the cover onto the rear of the boom. Install and securely tighten the retaining fasteners.

https://truckmanualshub.com/

Operator's Compartment

2-1 Operator's Compartment

How to Remove the Operator's Compartment

The operator's compartment is used to activate machine functions while sitting in the operator's drivers seat.

Within the operator's compartment there is a transmission column shifter, steering selector, 4-way controller, accelerator pedal, brake pedal and a differential lock switch. All of these components are replaceable.

For further information or assistance, consult the Genie Product Support.

WARNING Bodily injury hazard. This procedure requires specific repair skills, lifting equipment and a suitable workshop. Attempting this procedure without these skills and tools could result in death or serious injury and significant component damage. Dealer service is strongly recommended.

1 Disconnect the battery from the machine.

WARNING Electrocution/burn hazard. Contact with electrically charged circuits could result in death or serious injury. Remove all rings, watches and other jewelry.

2 Locate the secondary function manifold under the manifold inspection cover. Tag, disconnect and plug the hydraulic hoses at ports BP and BT of the secondary function manifold. Cap the fittings.

3 Locate the brake manifold under the manifold inspection cover. Tag, disconnect and plug the hydraulic hose at the underside of the brake manifold. Cap the fitting.

4 Working under the dashboard, locate the hydraulic hose at port L of the steering orbitral.

5 Working at the front axle, locate the hydraulic hose connected to the front axle steer cylinder at the operator's compartment side of the machine. Tag, disconnect and plug the hydraulic hose. Cap the fitting.

6 Tag, disconnect and plug the hydraulic hoses at ports SUP, SUR and SUT of the secondary function manifold. Cap the fitting.

WARNING Bodily injury hazard. Spraying hydraulic oil can penetrate and burn skin. Loosen hydraulic connections very slowly to allow the oil pressure to dissipate gradually. Do not allow oil to squirt or spray.

7 Tag, disconnect and plug the hydraulic hose at port JP of the secondary function manifold. Cap the fitting.

WARNING Bodily injury hazard. Spraying hydraulic oil can penetrate and burn skin. Loosen hydraulic connections very slowly to allow the oil pressure to dissipate gradually. Do not allow oil to squirt or spray.

8 Remove the fasteners securing the joystick mount to the operator's compartment. Disconnect the joystick harness and the remove the joystick assembly.

9 Working inside the chassis, tag and disconnect the wire harnesses at the connectors next to the operator's compartment.

https://truckmanualshub.com/

10 Support and secure the operator's compartment to an adjustable table capable of supporting the weight and that will allow the operator's compartment to remain in an upright and stable position.

NOTICE Component damage hazard. Wrapping a strap around the cab and lifting using an overhead crane can put excessive pressure on the glass windows of the cab, causing the windows to break. Do not lift the cab using a strap from an overhead crane if the strap contacts the windows.

Note: Placing a wedge between the operator's compartment and the adjustable table may be required to keep the operator's compartment stable.

11 Remove the lower fasteners securing the operator's compartment to the chassis.

12 Remove the upper fasteners securing the operator's compartment to the chassis.

WARNING Crushing hazard. The operator's compartment will fall if not properly supported when the fasteners are removed from the machine.

13 Slowly move the operator's compartment away from the chassis while feeding all loose hoses, cables and wires through the opening of the chassis.

NOTICE Component damage hazard. Hoses, cables and wires can be damaged if they are kinked or pinched.

Bolt torque specification	
Operator's cab mounting bolts	750 ft-lbs 1017 Nm

2-2 Machine Controls

How to Remove the Steering Column

1 Disconnect the battery from the machine.

WARNING Electrocution/burn hazard. Contact with electrically charged circuits could result in death or serious injury. Remove all rings, watches and other jewelry.

2 Remove the fasteners securing the transmission control lever and turn signal shifter, if equipped, to the column. Carefully separate the lever from the column.

3 Remove the nut securing the key switch to the dash panel. Gently push the key switch through the opening.

4 Remove the fasteners securing the dash panel to the dashboard.

5 Carefully pull the dash panel towards the seat of the operator's compartment.

6 Tag and disconnect the wire harness from the componments of the dash panel. Remove the dash panel from the machine.

7 Loosen the two lower fasteners securing the dash frame to the operator's compartment.

8 Remove the two upper fasteners securing the dash frame to the operator's compartment.

9 Rotate the dash frame towards the seat of the operator's compartment.Remove the dashboard from the machine.

10 Tag and disconnect the ground wire of the steer column.

11 Support and secure the steer orbitral to the dash frame.

12 Remove the fasteners securing the steer column and steer orbitral to the dash frame.

13 Lower the steer orbitral and remove the steer column from the machine.

https://truckmanualshub.com/

Operator's Compartment

How to Remove the Steering Wheel

1 Open the access door above the hydraulic tank.

2 Disconnect the battery from the machine.

WARNING Electrocution/burn hazard. Contact with electrically charged circuits could result in death or serious injury. Remove all rings, watches and other jewelry.

3 Remove the horn button from the steering wheel. Remove the nut securing the steering wheel to the column and remove the steering wheel.

How to Remove the Steer Orbitral

1 Remove the steering column. Refer to Repair Procedure, *How to Remove the Steering Column*.

2 Working under the dashboard, locate the hydraulic hose at port L of the steering orbitral.

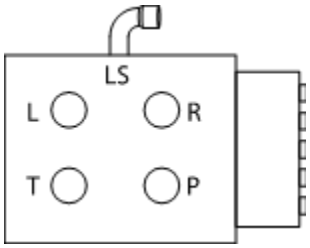

3 Follow the hydraulic hose from port L of the steer orbitral to its connection at the front axle of the machine. Tag, disconnect and plug the hydraulic hose at the front axle. Cap the fitting.

4 Tag, disconnect and plug the hydraulic hoses at ports SUP, SUR and SUT of the secondary function manifold. Cap the fitting.

WARNING Bodily injury hazard. Spraying hydraulic oil can penetrate and burn skin. Loosen hydraulic connections very slowly to allow the oil pressure to dissipate gradually. Do not allow oil to squirt or spray.

5 Tag, disconnect and plug the hydraulic hose at port SULS of the primary function manifold. Cap the fitting.

6 Slowly move the steer orbitral away from the dash frame while feeding all loose hoses through the opening of the chassis.

https://truckmanualshub.com/

How to Remove the Joystick - Models with Electronic Joystick

1 Disconnect the battery from the machine.

WARNING Electrocution/burn hazard. Contact with electrically charged circuits could result in death or serious injury. Remove all rings, watches and other jewelry.

2 Remove the side access panel.

3 Tag and disconnect the joystick wire harness from the machine.

4 Remove the fasteners securing the joystick mount panel to the side console.

5 Remove the fasteners securing the joystick to the mount panel. Remove the joystick.

How to Remove the Brake Pedal Assembly

1 Disconnect the battery from the machine.

WARNING Electrocution/burn hazard. Contact with electrically charged circuits could result in death or serious injury. Remove all rings, watches and other jewelry.

2 Fully press and release the brake pedal a minimum of 10 times to release the hydraulic pressure in the brake system.

3 Tag, disconnect and plug the hydraulic hoses at ports BP and BT of the secondary hydraulic manifold. Cap the fittings.

WARNING Bodily injury hazard. Spraying hydraulic oil can penetrate and burn skin. Loosen hydraulic connections very slowly to allow the oil pressure to dissipate gradually. Do not allow oil to squirt or spray.

4 Follow the hydraulic hose from port A of the brake pedal manifold to the brake manifold. Tag, disconnect and plug this hydraulic hose at the brake manifold. Cap the fitting.

5 Remove the fasteners securing the brake pedal assembly to the dash frame.

6 Gently rotate the brake pedal in an upwards direction and slowly move the brake pedal assembly away from the dash frame while feeding all loose hoses through the opening of the chassis.

https://truckmanualshub.com/

Operator's Compartment

How to Remove the Gauge Cluster Assembly

1 Disconnect the battery from the machine.

WARNING Electrocution/burn hazard. Contact with electrically charged circuits could result in death or serious injury. Remove all rings, watches and other jewelry.

2 Remove the fasteners securing the transmission control lever to the column. Carefully separate the lever from the column.

3 Grasp the edge of the dash cluster and pull the cluster through the opening in the dashboard.

4 Tag and disconnect the wire harness from the dash cluster. Remove the dash cluster from the machine.

https://truckmanualshub.com/

3-1
Fuel and Hydraulic Tanks

How to Remove the Fuel and Hydraulic Tank Assembly

DANGER Explosion and fire hazard. Engine fuels are combustible. Remove the fuel tank in an open, well-ventilated area away from heaters, sparks, flames and lighted tobacco. Always have an approved fire extinguisher within easy reach.

DANGER Explosion and fire hazard. Never drain or store fuel in an open container due to the possibility of fire.

DANGER Explosion and fire hazard. When transferring fuel, connect a grounding wire between the machine and pump or container.

1 Disconnect the battery from the machine.

WARNING Electrocution/burn hazard. Contact with electrically charged circuits could result in death or serious injury. Remove all rings, watches and other jewelry.

FUEL TANK

2 Remove the filler cap from the fuel tank.

3 Place a drain pan or other suitable container under the fuel tank.

4 Using an approved hand-operated pump, drain the fuel tank into a container of suitable capacity. Refer to Specifications, *Machine Specifications.*

DANGER Explosion and fire hazard. When transferring fuel, connect a grounding wire between the machine and pump or container.

Note: Be sure to only use a hand operated pump suitable for use with gasoline and/or diesel fuel.

5 Remove fasteners on the top of the fuel tank from inside the cab.

6 Remove fasteners on the bottom of the fuel tank.

7 Remove the fuel tank from bracket.

https://truckmanualshub.com/

Fuel and Hydraulic Tanks

HYDRAULIC TANK

8 Remove the access cover to the hydraulic tank.

9 Remove the filler cap from the hydraulic tank.

10 Place a drain pan or other suitable container under the hydraulic tank. Refer Specifications, *Machine Specifications*.

11 Remove the drain plug from the hydraulic tank and completely drain the tank.

⚠ CAUTION Bodily injury hazard. Beware of hot oil. Contact with hot oil may cause severe burns.

12 Tag, disconnect and plug the supply and return hoses from the hydraulic tank. Cap the fittings.

13 Lift boom and insert the safety chock.

14 Remove the cover under lift cylinder.

15 Remove the def tank and pump.

16 Remove the fasteners securing the tank assembly to the chassis. Remove the tank from the machine.

⚠ WARNING Crushing hazard. The tank assembly could become unbalanced and fall if not properly supported when removed from the machine.

https://truckmanualshub.com/

4-1 Engines

How to Repair the Deutz TCD3.6 Engine

Maintenance procedures and additional engine information is available in the Deutz TCD3.6 Workshop Manual.

Deutz TCD3.6 T3/T4i Workshop Manual	
Genie part number	218704
Deutz TCD3.6 T4F Workshop Manual	
Genie part number	1270993

4-2 Engine Fault Codes

How to Retrieve Engine Fault Codes

When the engine Electronic Control Module (ECM) detects an abnormal operating condition, a fault code is immediately stored in the ECM memory. At the same time, a colored warning lamp is illuminated.

To view the fault code, push and hold the diagnostic button for 5 seconds. The fault code will be displayed on the screen, if present. If more than one code is present, quickly push the diagnostic button to cycle through the codes. Push and hold the diagnostic button for 5 seconds to return to the operation screen.

To learn the specifics of and how to use the fault codes, refer to, Fault Codes Section.

https://truckmanualshub.com/

Transmission

5-1 Transmission

How to Repair the Transmission

Repair procedures and additional transmission information is available in the ZF WG-98 Transmission Repair Manual.

Repair Manual, ZF Transmission, 4 WG-98 TSC

Genie part number
1311107GT

Repair Manual, CVT 150 Transmission, ECOMEC

Genie part number
1311099GT

https://truckmanualshub.com/

6-1 Hydraulic Pump

How to Test the Function Pump

Note: When removing a hose assembly or fitting, the O-ring (if equipped) on the fitting and/or hose end must be replaced. All connections must be torqued to specification during installation. Refer to Specifications, *Hydraulic Hose and Fitting Torque Specifications.*

1 Tag, disconnect and plug the high pressure hydraulic hose from the primary function manifold. Cap the fitting on the main valve.

WARNING Bodily injury hazard. Spraying hydraulic oil can penetrate and burn skin. Loosen hydraulic connections very slowly to allow the oil pressure to dissipate gradually. Do not allow oil to squirt or spray.

Note: The high pressure hose is the smaller of the two hoses.

2 Connect a 0 to 5000 psi / 0 to 350 bar pressure gauge to the high pressure hose disconnected in step 1.

3 Hold the manual fuel shut-off lever on the engine in the closed position.

4 Observe the pressure gauge while cranking the engine in one second intervals.

⊙ Result: If the pressure gauge reads 3190 psi / 220 bar, immediately stop. The pump is good.

⊠ Result: If the pressure fails to reach 3190 psi / 220 bar, the pump needs to be adjusted OR or the pump or pump coupling is faulty and will need to be serviced or replaced.

NOTICE Component damage hazard. There is no relief valve in the hydraulic pump and the pump can be damaged if the pressure is allowed to exceed specification. When testing the pump, crank the engine in one second intervals until the correct pressure is confirmed. Do not over-pressurize the pump.

5 Remove the pressure gauge and install the high pressure hose onto the pump. Torque to specification. Refer to Specifications, *Hydraulic Hose and Fitting Torque Specifications*.

WARNING Bodily injury hazard. Spraying hydraulic oil can penetrate and burn skin. Loosen hydraulic connections very slowly to allow the oil pressure to dissipate gradually. Do not allow oil to squirt or spray.

https://truckmanualshub.com/

Hydraulic Pump

How to Remove the Function Pump

WARNING Bodily injury hazard. This procedure requires specific repair skills, lifting equipment and a suitable workshop. Attempting this procedure without these skills and tools could result in death or serious injury and significant component damage. Dealer service is strongly recommended.

Note: When removing a hose assembly or fitting, the O-ring (if equipped) on the fitting and/or hose end must be replaced. All connections must be torqued to specification during installation. Refer to Specifications, *Hydraulic Hose and Fitting Torque Specifications.*

Note: Perform this procedure with the engine off and cool.

1 Open the access door above the hydraulic tank.

2 Disconnect the battery from the machine.

WARNING Electrocution/burn hazard. Contact with electrically charged circuits could result in death or serious injury. Remove all rings, watches and other jewelry.

3 Tag and disconnect the wire harness from the pump.

4 Tag and disconnect the case drain hose at the top of the pump. Cap the fitting on the pump.

Note: Placing the open end of the case drain hose below the hydraulic oil level in the hydraulic tank will result in excessive hydraulic fluid leaking from the hose. Do not lower the open end of the case drain hose to below the fluid level of the hydraulic tank until the hose is plugged.

5 Tag, disconnect and plug the large hydraulic pump supply hose at the pump. Cap the fitting on the pump.

Note: Placing the open end of the pump supply hose below the fluid level in the hydraulic tank will result in excessive hydraulic fluid leaking from the hose. Do not lower the open end of the pump supply hose to below the fluid level of the hydraulic tank until the hose is plugged.

6 Tag, disconnect and plug the high pressure hose at the pump. Cap the fitting on the pump.

WARNING Bodily injury hazard. Spraying hydraulic oil can penetrate and burn skin. Loosen hydraulic connections very slowly to allow the oil pressure to dissipate gradually. Do not allow oil to squirt or spray.

7 Tag and disconnect the transmission cooler hoses at the transmission cooler. Cap the fittings.

CAUTION Burn hazard. Contact with hot engine components may cause severe burns.

8 Remove the fasteners securing the pump to the transmission. Remove the pump from the machine.

https://truckmanualshub.com/

How to Install the Function Pump

1 Carefully install the hydraulic pump onto the transmission. Install the fasteners and tighten to finger tight.

2 Torque the fasteners evenly to 85 ft-lbs / 115 Nm.

3 Install the smaller high pressure hose onto the pump outlet. Torque the fasteners to 27-37 ft-lbs / 37-50 Nm.

4 Install the larger low pressure hose onto the pump outlet. Install the hose retaining rings and fasteners. Torque the fasteners to 55-66 ft-lbs / 74-90 Nm.

5 Working at the case drain at the top of the pump, fill the pump with hydraulic fluid until the fluid is at the top of the case drain fitting.

6 Install the case drain hose onto the pump and torque to specification. Refer to Specifications, *Hydraulic Specifications*.

7 Securely install the wire harness onto the pump.

8 Check the level of the hydraulic fluid in the hydraulic tank. Add fluid if needed.

9 Prime the pump. Refer to Repair Procedure, *How to Prime the Function Pump*.

10 Start the engine and inspect for leaks.

11 Turn the machine off.

12 Adjust the pump pressure. Refer to Repair Procedures, *How to Adjust the Function Pump Standby Pressure* and *How to Adjust the Function Pump Pressure Pressure Compensator*.

How to Prime the Function Pump

Note: When removing a hose assembly or fitting, the O-ring (if equipped) on the fitting and/or hose end must be replaced. All connections must be torqued to specification during installation. Refer to Specifications, *Hydraulic Hose and Fitting Torque Specifications.*

1 Install all hoses onto the hydraulic pump. Torque to specification.Refer to Specifications, *Hydraulic Hose and Fitting Torque Specifications*.

2 Locate the case drain filler plug at the side of the function pump.

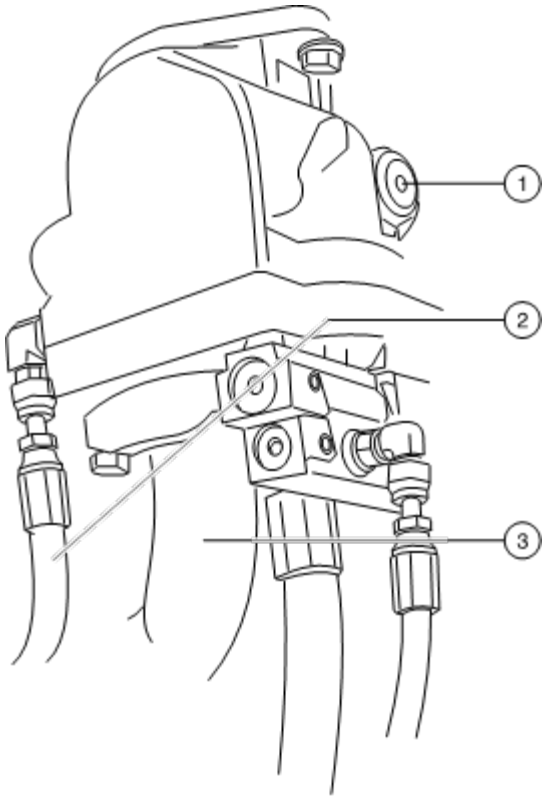

1 case drain filler plug
2 case drain hose
3 hydraulic supply line (from tank)

https://truckmanualshub.com/

Hydraulic Pump

3 Remove the plug and slowly fill the case drain port of the pump with hydraulic fluid until the oil level is even with the bottom of the hole. Install the plug and torque to 40 ft-lbs / 54 Nm.

4 Start the engine, allow the engine to run at low idle for 15 seconds then shut off the engine. Wait 15 seconds, then start the engine again. Allow the engine to run at low idle for 15 seconds and then shut off the engine.

5 Check for hydraulic leaks and clean up any oil that may have spilled.

How to Adjust the Function Pump Standby Pressure

1 Connect a 0 to 1000 psi / 0 to 100 bar pressure gauge to test port 'TP' on the primary function manifold. Refer to *Primary Function Manifold Components.*

2 Start the engine and allow the engine to run at low idle.

3 Observe the pressure reading on the pressure gauge.

⊙ Result: The pressure gauge reads 450 ±25 psi / 31 ±1.7 bar. The pump is functioning correctly. Proceed to step 6.

⊠ Result: The pressure gauge fails to read 450 ±25 psi / 31 ±1.7 bar. The pressure setting needs to be adjusted. Proceed to step 4.

https://truckmanualshub.com/

4 Loosen the set screw for the standby pressure adjustment screw.

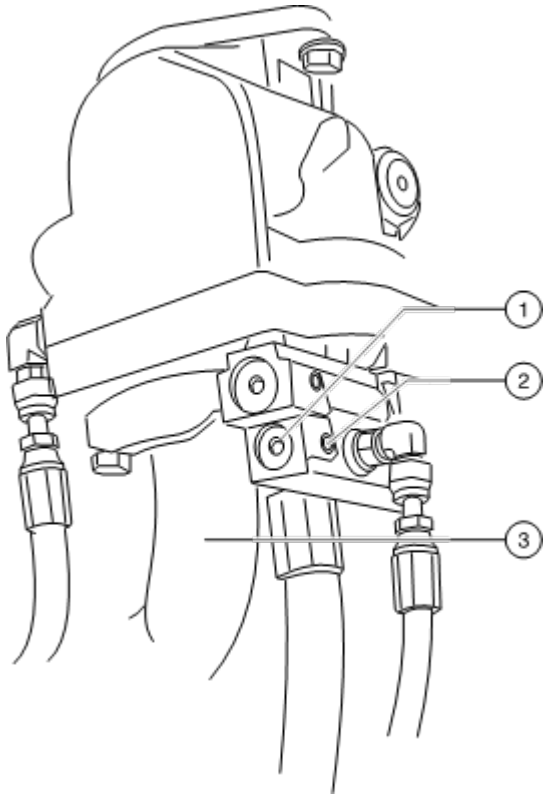

1 standby pressure adjustment screw
2 set screw
3 hydraulic supply line (from tank)

5 Adjust the function pump standby pressure. Turn the adjustment screw clockwise to increase the pressure or counterclockwise to decrease the pressure. Tighten the set screw.

6 Turn the engine off and remove the pressure gauge.

WARNING Bodily injury hazard. Spraying hydraulic oil can penetrate and burn skin. Loosen hydraulic connections very slowly to allow the oil pressure to dissipate gradually. Do not allow oil to squirt or spray.

How to Adjust the Function Pump Standby Pressure

Note: Two people will be required to perform this procedure.

1 Connect a 0 to 5000 psi / 0 to 350 bar pressure gauge to test port 'TP' on the primary function manifold. Refer to *Primary Function Manifold Components*.

2 Start the engine and allow the engine to run at low idle.

3 Fully retract the boom.

4 Continue to activate the boom retract function and observe the pressure reading on the pressure gauge.

⊙ Result: The pressure gauge reads 3190±50 psi / 220±3.4 bar. The pump is functioning correctly. Proceed to step 7.

⊠ Result: The pressure gauge fails to read 3190±50 psi / 220±3.4 bar. The pressure setting needs to be adjusted. Proceed to step 5.

https://truckmanualshub.com/

Hydraulic Pump

5 Loosen the set screw for the pressure compensator adjustment screw.

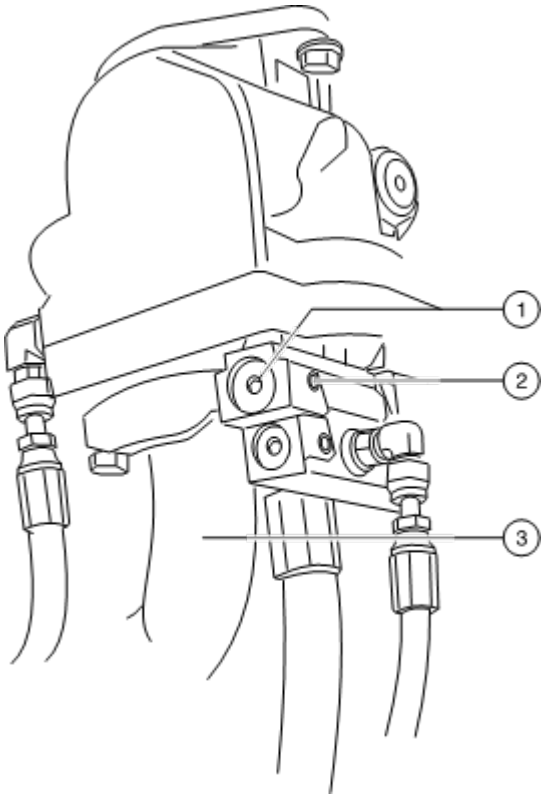

1 pressure compensator adjustment screw
2 set screw
3 hydraulic supply line (from tank)

6 Adjust the pressure compensator pressure. Turn the adjustment screw clockwise to increase the pressure or counterclockwise to decrease the pressure. Tighten the set screw.

NOTICE Component damage hazard. Do not adjust the pressure compensator higher than specified.

7 Turn the engine off and remove the pressure gauge.

WARNING Bodily injury hazard. Spraying hydraulic oil can penetrate and burn skin. Loosen hydraulic connections very slowly to allow the oil pressure to dissipate gradually. Do not allow oil to squirt or spray.

https://truckmanualshub.com/

7-1
PVG Manifold Components

The Proportional Valve Group manifold is located at the rear of the chassis.

Index No.	Description	Function
1	Assembly, tilt	Tilt functions
2	Assembly, lift	Lift functions
3	Assembly, auxiliary	Auxiliary functions
4	Assembly, extend/retract	Extend/retract functions
5	Assembly, sway	Sway functions

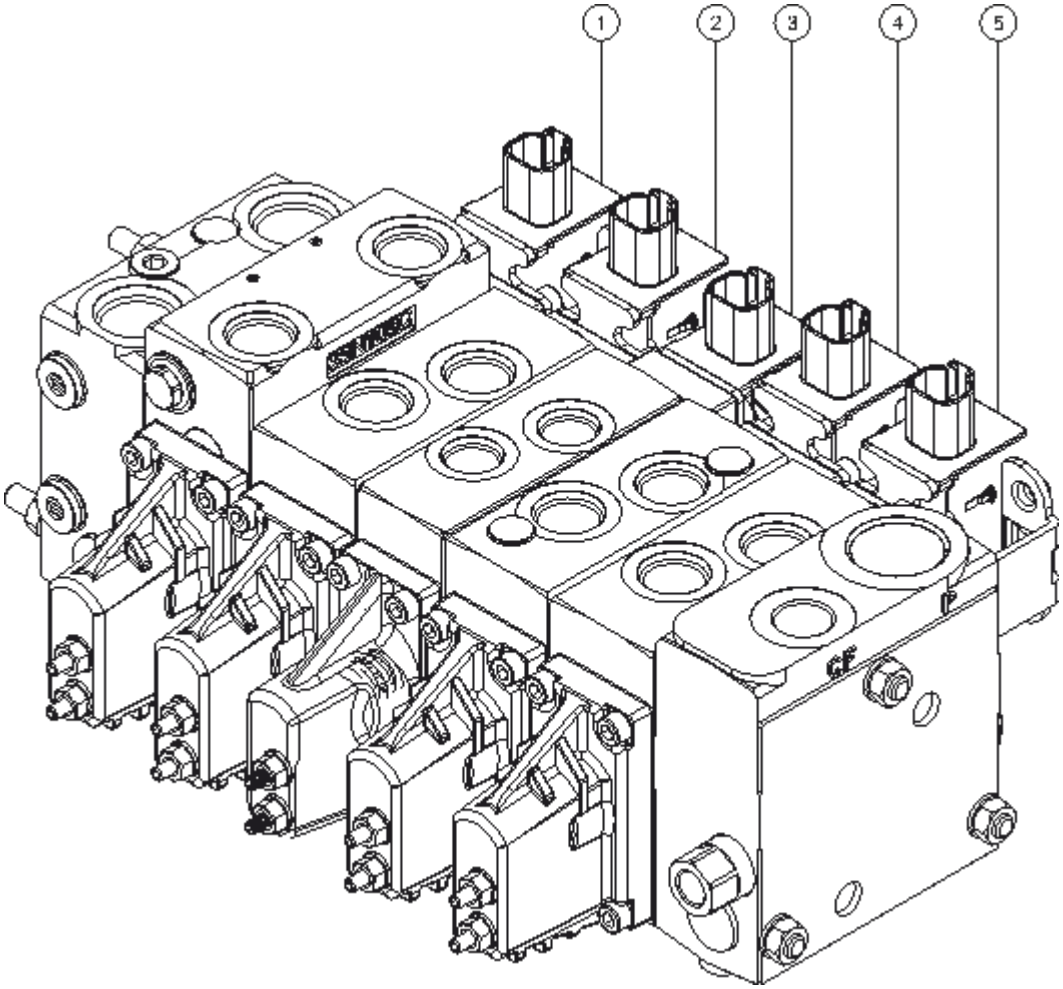

https://truckmanualshub.com/

Manifolds

7-2
Secondary Function Manifold Components

The secondary function manifold is located under the manifold inspection cover.

Index No.	Description	Schematic Item	Function	Torque
1	Check valve, 4 psi / 0.3 bar	CV2	Tank return circuit	20-25 ft-lbs / 27-34 Nm
2	Check valve, 4 psi / 0.3 bar	CV5	Drive circuit	20-25 ft-lbs / 27-34 Nm
3	Check valve, 4 psi / 0.3 bar	CV4	Rear lockup extend circuit	20-25 ft-lbs / 27-34 Nm
4	Check valve, 4 psi / 0.3 bar	CV3	Rear lockup retract circuit	20-25 ft-lbs / 27-34 Nm
5	Solenoid valve, 2 position 4 way	SV5		33-37 ft-lbs / 45-50 Nm
6	Check valve, reverse type	CV10		8-10 ft-lbs / 10-15 Nm
7	Check valve, reverse type	CV8	Left stabilizer extend	8-10 ft-lbs / 10-15 Nm
8	Check valve, reverse type	CV7	Right stabilizer retract	8-10 ft-lbs / 10-15 Nm
9	Solenoid valve, 3 position 4 way	SV2	Left stabilizer	33-37 ft-lbs / 45-50 Nm
10	Solenoid valve, 3 position 4 way	SV1	Right stabilizer	33-37 ft-lbs / 45-50 Nm
11	Check valve, 4 psi / 0.3 bar	CV1	Parking brake	20-25 ft-lbs / 27-34 Nm
12	Solenoid valve, 2 position 3 way	SV3	Parking brake	26-30 ft-lbs / 35-40 Nm
13	Solenoid valve, 2 position 3 way	SV4	Rear lock-up	26-30 ft-lbs / 35-40 Nm
14	Check valve, reverse type	CV6	Right stabilizer extend	8-10 ft-lbs / 10-15 Nm
15	Check valve, reverse type	CV9	Left stabilizer retract	8-10 ft-lbs / 10-15 Nm
16	Flow regulator valve, 6 gpm / 22.7 L/min	FR1	Right outrigger circuit	30-35 ft-lbs / 41-47 Nm
17	Flow regulator valve, 6 gpm / 22,7 L/min	FR2	Left outrigger circuit	30-35 ft-lbs / 41-47 Nm
18	DO3 valve, 3 position 4 way	SVD1	Steer left/right	60 in-lbs / 6.8 Nm
19	Pressure reducing/relief valve, 145 psi / 10 bar	PR1	Parking brake	33-37 ft-lbs / 45-50 Nm
20	Pressure reducing/relief valve, 50 psi / 3,4 bar	PR2	Rear lock-up circuit	30-35 ft-lbs / 41-47 Nm

https://truckmanualshub.com/

Manifolds

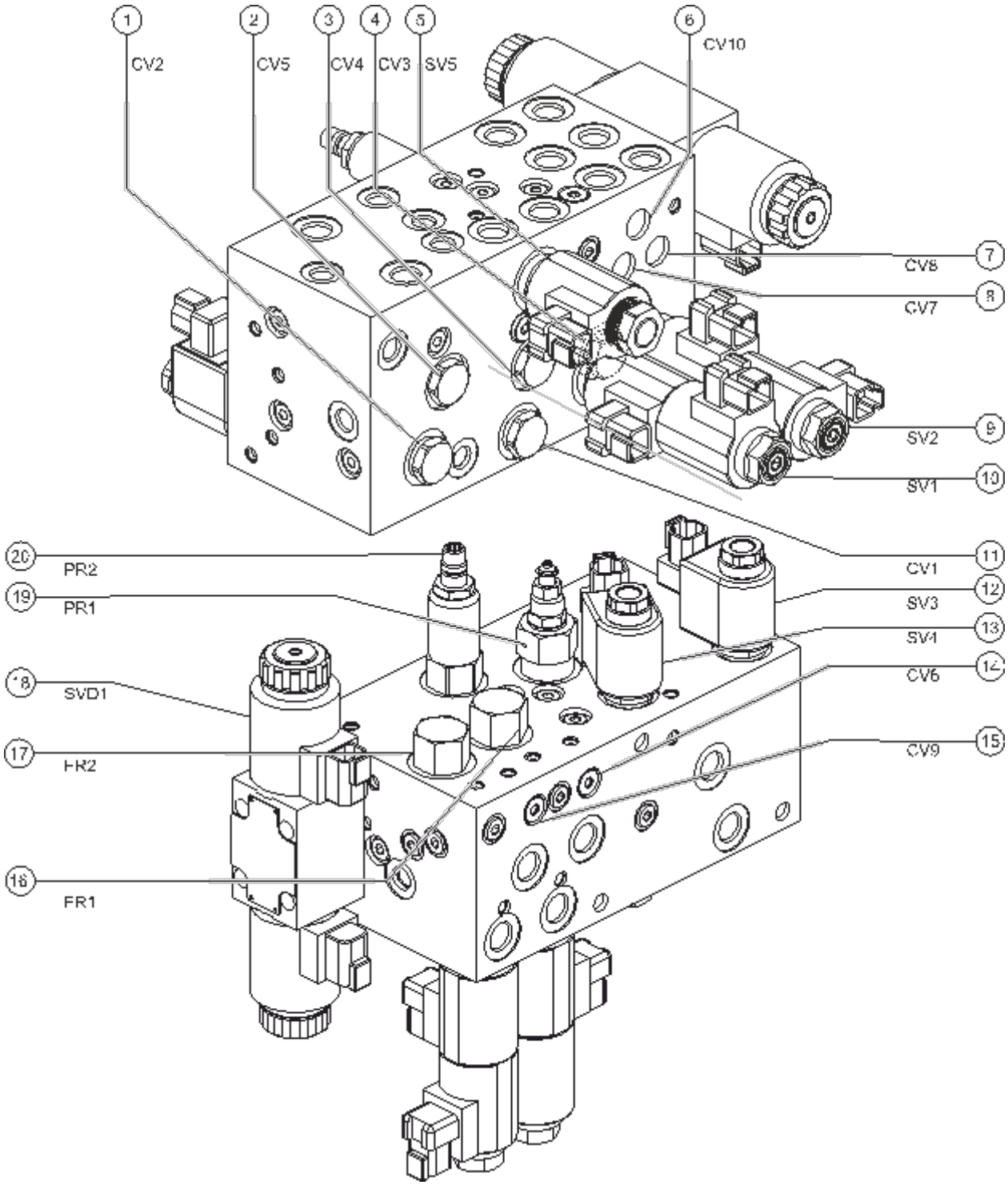

https://truckmanualshub.com/

Manifolds

7-3
Brake Manifold Components

The brake manifold is located under the manifold inspection cover.

Index No.	Description	Schematic Item	Function	Torque
1	Pressure switch, 450 psi / 31 bar	-	Service brake	11 ft-lbs / 14.9 Nm

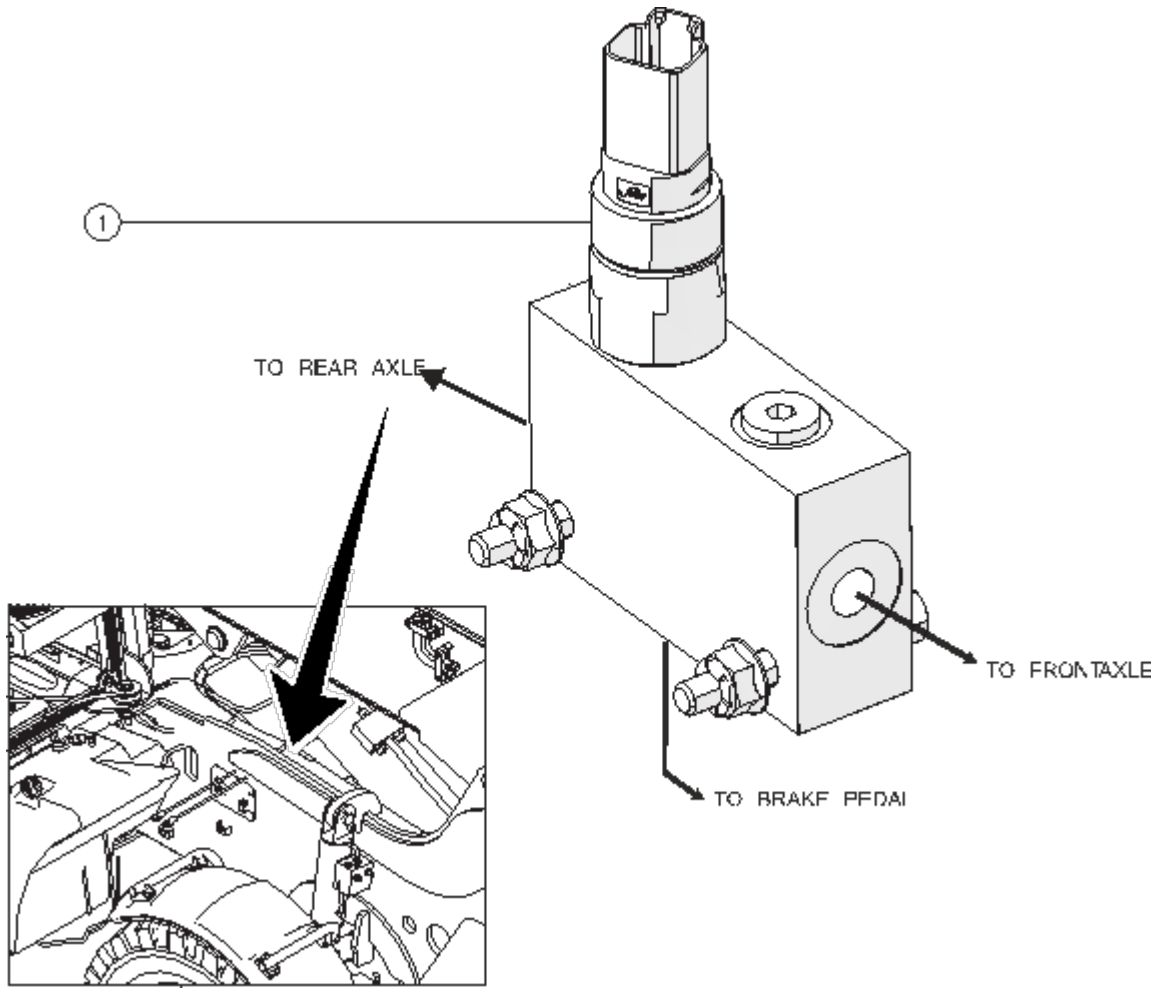

https://truckmanualshub.com/

7-4 Valve Adjustments - Secondary Function Manifold

How to Set the Parking Brake System Pressure

Note: Be sure that the hydraulic oil level is visible in the inspection glass of the hydraulic tank.

1 Install a 0 to 1000 psi / 0 to 100 bar pressure gauge into test port 'TP' at the top of the primary function manifold, Refer to Primary Function Manifold Components.

2 Start the engine. Allow the engine to idle after warming the engine to operating temperature.

3 Without operating any machine controls, observe the reading on the pressure gauge.

⊙ Result: The pressure gauge reads 450 ±25 psi / 31 ±1.7 bar. The pump is functioning correctly.

⊠ Result: The pressure gauge fails to read 450 ±25 psi / 31 ±1.7 bar. The pressure setting needs to be adjusted. Refer to Repair Procedure, *How to Adjust the Function Pump Pressure*.

4 Turn the machine off. Remove the pressure gauge from the test port.

WARNING Bodily injury hazard. Spraying hydraulic oil can penetrate and burn skin. Loosen hydraulic connections very slowly to allow the oil pressure to dissipate gradually. Do not allow oil to squirt or spray.

5 Install a 0 to 1000 psi / 0 to 100 bar pressure gauge into test port 'TPB' at the top of the secondary function manifold, Refer to Secondary Function Manifold Components.

6 Start the engine. Allow the engine to idle.

⊙ Result: The pressure gauge reads 400 psi / 27.5 bar. The pressure setting is correct. Proceed to step 11.

⊠ Result: The pressure gauge fails to read 400 psi / 27.5 bar. The pressure setting needs to be adjusted. Proceed to step 7.

7 Turn the machine off. Hold the brake pressure reducing/relief valve with a wrench and remove the cap.

8 Adjust the internal hex socket. Turn it clockwise to increase the pressure or counterclockwise to decrease the pressure.

NOTICE Component damage hazard. Do not adjust the relief valve pressures higher than specifications.

9 Install the relief valve cap.

10 Repeat this procedure beginning with step 6.

11 Turn the machine off. Remove the pressure gauge from the test port.

WARNING Bodily injury hazard. Spraying hydraulic oil can penetrate and burn skin. Loosen hydraulic connections very slowly to allow the oil pressure to dissipate gradually. Do not allow oil to squirt or spray.

https://truckmanualshub.com/

Manifolds

How to Set the Rear Lock-up System Pressure

Note: Be sure that the hydraulic oil level is visible in the inspection glass of the hydraulic tank.

1 Install a 0 to 1000 psi / 0 to 100 bar pressure gauge into test port 'TP' at the top of the primary function manifold. Refer to Primary Function Manifold Components.

2 Start the engine. Allow the engine to idle after warming the engine to operating temperature.

3 Without operating any machine controls, observe the reading on the pressure gauge.

⊙ Result: The pressure gauge reads 450 ±25 psi / 31 ±1.7 bar. The pump is functioning correctly.

⊠ Result: The pressure gauge fails to read 450 ±25 psi / 31 ±1.7 bar. The pressure setting needs to be adjusted. Refer to Repair Procedure, *How to Adjust the Function Pump Pressure*.

4 Turn the machine off. Remove the pressure gauge from the test port.

WARNING Bodily injury hazard. Spraying hydraulic oil can penetrate and burn skin. Loosen hydraulic connections very slowly to allow the oil pressure to dissipate gradually. Do not allow oil to squirt or spray.

5 Install a 0 to 500 psi / 0 to 50 bar pressure gauge into test port 'TR' at the top of the secondary function manifold, Refer to Secondary Function Manifold Components.

6 Start the engine. Allow the engine to idle.

⊙ Result: The pressure gauge reads 50 psi / 3.4 bar. The pressure setting is correct. Proceed to step 11.

⊠ Result: The pressure gauge fails to read 50 psi / 3.4 bar. The pressure setting needs to be adjusted. Proceed to step 7.

7 Turn the machine off. Hold the rear lockup pressure reducing/relief valve with a wrench and remove the cap.

8 Adjust the internal hex socket. Turn it clockwise to increase the pressure or counterclockwise to decrease the pressure.

NOTICE Component damage hazard. Do not adjust the relief valve pressures higher than specifications.

9 Install the relief valve cap.

10 Repeat this procedure beginning with step 6.

11 Turn the machine off. Remove the pressure gauge from the test port.

WARNING Bodily injury hazard. Spraying hydraulic oil can penetrate and burn skin. Loosen hydraulic connections very slowly to allow the oil pressure to dissipate gradually. Do not allow oil to squirt or spray.

https://truckmanualshub.com/

7-5 Valve Coils

How to Test a Coil

A properly functioning coil provides an electromotive force which operates the solenoid valve. Critical to normal operation is continuity within the coil that provides this force field.

Since coil resistance is sensitive to temperature, resistance values outside specification can produce erratic operation. When coil resistance decreases below specification, amperage increases. As resistance rises above specification, voltage increases.

While valves may operate when coil resistance is outside specification, maintaining coils within specification will help ensure proper valve function over a wide range of operating temperatures.

WARNING Electrocution/burn hazard. Contact with electrically charged circuits could result in death or serious injury. Remove all rings, watches and other jewelry.

1 Tag and disconnect the wiring from the coil to be tested.

2 Test the coil resistance.

⊙ Result: The resistance should be within specification, plus or minus 30%.

⊠ Result: If the resistance is not within specification, plus or minus 30%, replace the coil.

Valve Coil Resistance Specification

Note: The following coil resistance specifications are at an ambient temperature of 68°F / 20°C. As valve coil resistance is sensitive to changes in air temperature, the coil resistance will typically increase or decrease by 4% for each 18°F / 10°C that your air temperature increases or decreases from 68°F / 20°C.

Valve Coil Resistance Specification

Description	Specification
Solenoid valve, 2 position 4 way 12V DC with diode (schematic items AA, AD, AY, AAB and BAA)	8.9Ω
Solenoid valve, 2 position 2 way 12V DC with diode (schematic items AAC and EA)	8.9Ω
DO3 valve, 3 position 4 way 12V DC with diode (schematic items CA and EB)	5.6Ω
Solenoid valve, 2 position 2 way 12V DC with diode (schematic items FA)	8.8Ω
Solenoid valve, 2 position 3 way 12V DC with diode (schematic items CF, CO and CP)	8.9Ω
Solenoid valve, 2 position 4 way 12V DC with diode (schematic items CG)	7.3Ω
Solenoid valve, 3 position 4 way 12V DC with diode (schematic items DA and DB)	7.3Ω

https://truckmanualshub.com/

Manifolds

How to Test a Coil Diode

Properly functioning coil diodes protect the electrical circuit by suppressing voltage spikes. Voltage spikes naturally occur within a function circuit following the interruption of electrical current to a coil. Faulty diodes can fail to protect the electrical system, resulting in a tripped circuit breaker or component damage.

⚠WARNING Electrocution/burn hazard. Contact with electrically charged circuits could result in death or serious injury. Remove all rings, watches and other jewelry.

1 Test the coil for resistance. Refer to Repair Procedure, *How to Test a Coil*.

2 Connect a 10W resistor to the negative terminal of a known good 9V DC battery. Connect the other end of the resistor to a terminal on the coil.

Resistor 10Ω

Genie part number 27287

Note: The battery should read 9V DC or more when measured across the terminals.

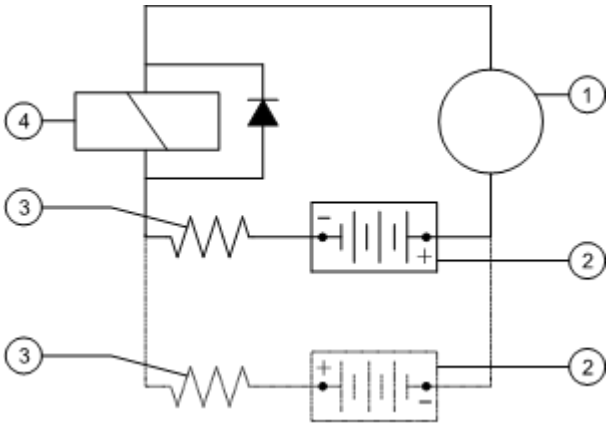

1 multimeter
2 9v DC battery
3 10Ω resistor
4 coil

Note: Dotted lines in illustration indicate a reversed connection as specified in step 6.

3 Set a multimeter to read DC current.

Note: The multimeter, when set to read DC current, should be capable of reading up to 800 mA.

4 Connect the negative lead to the other terminal on the coil.

5 Momentarily connect the positive lead from the multimeter to the positive terminal on the 9V DC battery. Note and record the current reading.

6 At the battery or coil terminals, reverse the connections. Note and record the current reading.

⊙ Result: Both current readings are greater than 0 mA and are different by a minimum of 20%. The coil is good.

⊠ Result: If one or both of the current readings are 0 mA, or if the two current readings do not differ by a minimum of 20%, the coil and/or its internal diode are faulty and the coil should be replaced.

https://truckmanualshub.com/

8-1
Axles

How to Repair the Axle

Repair procedures and additional axle information is available in the Dana 212HY and 223 Axle Maintenance and Repair Manual.

Dana 212HY and 223 Axle Maintenance and Repair Manual	
Genie part number	115026

https://truckmanualshub.com/

Outriggers

9-1 Outriggers

How to Remove an Outrigger

1 Extend the outrigger until the pad just touches the ground. Do not rest the weight of the machine on the outrigger.

2 Tag, disconnect and plug the hydraulic supply hoses at the outrigger cylinder. Cap the fittings.

WARNING Bodily injury hazard. Spraying hydraulic oil can penetrate and burn skin. Loosen hydraulic connections very slowly to allow the oil pressure to dissipate gradually. Do not allow oil to squirt or spray.

NOTICE Component damage hazard. Hoses can be damaged if they are kinked or pinched.

3 Attach a lifting strap from an overhead crane to the barrel end of the fork level cylinder. Support the cylinder. Do not apply any lifting pressure.

4 Remove the fasteners securing the outrigger cylinder barrel-end pivot pin to the machine.

5 Use a soft metal drift to remove the outrigger cylinder barrel-end pivot pin. Lower the cylinder onto the outrigger.

WARNING Crushing hazard. The cylinder may become unbalanced and fall if not properly supported when the pivot pin is removed from the machine.

6 Attach a lifting strap from an overhead crane to the outrigger assembly. Support the outrigger. Do not apply any lifting pressure.

7 Remove the fasteners securing the outrigger pivot pin to the machine.

8 Use a soft metal drift to remove the pivot pin. Remove the outrigger assembly from the machine.

WARNING Crushing hazard. The outrigger will fall if not properly supported when the pivot pin is removed from the machine.

https://truckmanualshub.com/

How to Remove an Outrigger Cylinder

Note: When removing a hose assembly or fitting, the O-ring (if equipped) on the fitting and/or hose end must be replaced. All connections must be torqued to specification during installation. Refer to Specifications, *Hydraulic Hose and Fitting Torque Specifications.*

1 Extend the outrigger until the pad just touches the ground. Do not rest the weight of the machine on the outrigger.

2 Tag, disconnect and plug the two hydraulic supply hoses at the outrigger cylinder. Cap the fittings.

WARNING Bodily injury hazard. Spraying hydraulic oil can penetrate and burn skin. Loosen hydraulic connections very slowly to allow the oil pressure to dissipate gradually. Do not allow oil to squirt or spray.

NOTICE Component damage hazard. Hoses can be damaged if they are kinked or pinched.

3 Attach a lifting strap from an overhead crane to the barrel end of the outrigger cylinder. Support the cylinder. Do not apply any lifting pressure.

4 Remove the fasteners securing the outrigger cylinder barrel-end pivot pin to the chassis.

5 Use a soft metal drift to remove the pivot pin.

WARNING Crushing hazard. The cylinder will fall if not properly supported when the pivot pin is removed from the machine.

6 Raise the cylinder to a vertical position.

7 Remove the fasteners securing the outrigger cylinder rod-end pivot pin to the machine.

8 Use a soft metal drift to remove the pivot pin. Remove the cylinder from the machine.

WARNING Crushing hazard. The cylinder will fall if not properly supported when the pivot pin is removed from the machine.

https://truckmanualshub.com/

This page intentionally left blank.

https://truckmanualshub.com/

Fault Codes

Observe and Obey:

- ☑ Troubleshooting and repair procedures shall be completed by a person trained and qualified on the repair of this machine
- ☑ Immediately tag and remove from service a damaged or malfunctioning machine.
- ☑ Repair any machine damage or malfunction before operating the machine.
- ☑ Unless otherwise specified, perform each procedure with the machine in the following configuration:
  - Machine parked on a firm, level surface
  - Boom in the stowed position
  - Key switch in the off position with the key removed
  - Wheels chocked

Before Troubleshooting:

- ☑ Read, understand and obey the safety rules and operating instructions in the appropriate operator's manual on your machine.
- ☑ Be sure that all necessary tools and test equipment are available and ready for use.
- ☑ Read each appropriate fault code thoroughly. Attempting short cuts may produce hazardous conditions.
- ☑ Be aware of the following hazards and follow generally accepted safe workshop practices.

⚠ WARNING Electrocution/burn hazard. Contact with electrically charged circuits could result in death or serious injury. Remove all rings, watches and other jewelry.

Note: Two persons will be required to safely perform some troubleshooting procedures.

https://truckmanualshub.com/

Diagnostic Display

When the engine Electronic Control Module (ECM) detects an abnormal operating condition, a fault code is immediately stored in the ECM memory.

The fault code is displayed on the LCD display which is located on the gauge cluster in the operator's compartment.

The gauge cluster also includes two warning lights.

They are an amber colored light which signals an abnormal engine condition which should be corrected as soon as possible and a red colored light which signals an engine condition which requires the operator to shut down the engine as soon as possible.

The ECM will, in some cases, automatically shut down the engine when the red light is displayed.

Active Fault Codes

Active Fault Codes will be displayed on the gauge cluster when the diagnostic button is pressed for 5 seconds, if present. If multiple fault codes are detected, scroll through them using the diagnostic button.

Active Codes vs Stored Codes

Active fault codes, indicating an engine condition or conditions which have not been corrected, are displayed at the moment the fault is detected.

Stored fault codes are the cumulative history of fault codes which the ECM has detected. These fault codes may be recalled by service personnel at a later time even if the condition which caused the engine fault has ceased to exist.

Note: Additional hardware will be necessary to access stored codes.

Decoding Fault Codes

The Suspect Parameter Number (SPN) and the Failure Mode Identifier (FMI), when combined, are the basis for an engine fault code. The SPN number indicates the affected component; the FMI number reveals the type of failure that has occurred. Comparing the combination of numbers to the fault code chart on the following pages will help to determine the exact engine fault and a corrective course of action. For additional information, refer to the engine operator's manual which came with your machine.

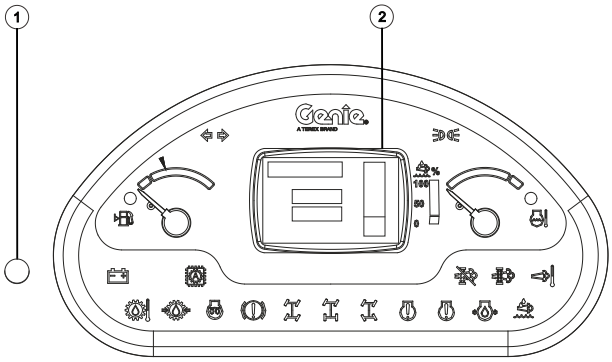

1 Diagnostic button
2 LCD screen

https://truckmanualshub.com/

Deutz TCD3.6 Engine Fault Codes

SPN = Suspect Parameter Number
ASPN = Alternate Suspect Parameter Number
FMI = Failure Mode Identifier

SPN	ASPN	FMI	Description
29		3	Handthrottle; signal out of range, short circuit to battery
		4	Handthrottle; signal out of range, short circuit to ground
51		3	Actuator error EGR-Valve (2.9;3.6) or Throttle-Valve (6.1,7.8); internal error
		4	Actuator error EGR-Valve (2.9;3.6) or Throttle-Valve (6.1,7.8); internal error
		5	Actuator error EGR-Valve (2.9;3.6) or Throttle-Valve (6.1,7.8); internal error
		6	Actuator error EGR-Valve (2.9;3.6) or Throttle-Valve (6.1,7.8); internal error
		7	Actuator error EGR-Valve (2.9;3.6) or Throttle-Valve (6.1,7.8); internal error
		11	Actuator error EGR-Valve (2.9;3.6) or Throttle-Valve (6.1,7.8); internal error
		12	Actuator error EGR-Valve (2.9;3.6) or Throttle-Valve (6.1,7.8); internal error
84		2	Sensor vehicle speed; plausibility error
91		3	Sensor error accelerator pedal; signal range check high
		4	Sensor error accelerator pedal; signal range check low
		11	Plausibility error between APP1 and APP2 or APP1 and idle switch
94		1	Low fuel pressure; system reaction initiated
		3	Sensor error low fuel pressure; signal range check high
		4	Sensor error low fuel pressure; signal range check low
97		3	Sensor error water in fuel; signal range check high
		4	Sensor error water in fuel; signal range check low
		12	Water in fuel level prefilter; maximum value exceeded
100		0	High oil pressure; system reaction initiated
		1	High oil pressure; system reaction initiated
		3	Sensor error oil pressure; signal range check high
		4	Sensor error oil pressure sensor; signal range check low
102		2	Charged air pressure; system reaction initiated
		3	Sensor error charged air pressure; signal range check high
		4	Sensor error charged air pressure; signal range check low
105		0	Charged air cooler temperature; system reaction initiated
		3	Sensor error charged air temperature; signal range check high
		4	Sensor error charged air temperature; signal range check low

https://truckmanualshub.com/

Deutz TCD3.6 Engine Fault Codes

SPN = Suspect Parameter Number
ASPN = Alternate Suspect Parameter Number
FMI = Failure Mode Identifier

SPN	ASPN	FMI	Description
107		0	Air filter differential pressure; system reaction initiated
		3	Sensor error airfilter differential pressure; short circuit to battery
		4	Sensor error airfilter differential pressure; short circuit to ground
108		3	Sensor error ambient air pressure; signal range check high
		4	Sensor error ambient air pressure; signal range check low
110		0	Coolant temperature; system reaction initiated
		3	Sensor error coolant temperature; signal range check high
		4	Sensor error coolant temperature; signal range check low
111		1	Coolant level too low
132		11	Air flow sensor; sensor error
157		3	Sesnor error rail pressure; signal range check high
		4	Sensor error rail pressure; signal range check low
164		2	Rail pressure safety function is not executed correctly
168		0	Physikal range check high for battery voltage
		1	Physikal range check low for battery voltage
		2	High battery voltate; warning threshold exceeded
		2	Battery voltage; system reaction initiated
		3	Sensor error battery voltage; signal range check high
		3	Sensor error battery voltage; signal range check high
		4	Sensor error battery voltage; signal range check low
		4	Sensor error battery voltage; signal range check low
171		3	Sensor error environment temperature; signal range check high
		4	Sensor error environment temperature; signal range check low
172		0	Physical range check high for intake air temperature
		1	Physical range check low for intake air temperature
		2	Intake air sensor; plausibility error
		3	Sensor error intake air; signal range check high
		4	Sensor error intake air sensor; signal range check low
			Sensor ambient air temperature; plausibility error
174		0	High Low fuel temperature; shut off threshold exceeded
			High low fuel temperature; warning threshold exceeded

https://truckmanualshub.com/

Deutz TCD3.6 Engine Fault Codes

SPN = Suspect Parameter Number
ASPN = Alternate Suspect Parameter Number
FMI = Failure Mode Identifier

SPN	ASPN	FMI	Description
175		0	Oil temperature; out of range, system reaction initiated
		1	Physical range check low for oil temperature
		2	Oil temperature; plausibility error
		3	Sensor error oil temperature; signal range check high
		4	Sensor error oil temperature; signal range check low
190		0	Engine speed above warning threshold (FOC-Level 1)
		2	Offset angle between crank- and camshaft sensor is too large
		8	Speed detection; out of range, signal disrupted
		11	Engine speed above warning threshold (FOC-Level 2)
		12	Speed detection; out of range, signal disrupted
		14	Speed detection; out of range, signal disrupted
411		0	Physical range check high for differential pressure Venturiunit (EGR)
		1	Physical range check low for differential pressure Venturiunit (EGR)
		3	Sensor error differential pressure Venturiunit (EGR); signal range check high
		4	Physical range check low for EGR differential pressure
			Sensor error differential pressure Venturiunit (EGR); signal range check low
412		3	Sensor error EGR cooler downstream temperature; signal range check high
		4	Sensor error EGR cooler downstream temperature; signal range check low
520		9	Timeout Error of CAN-Receive-Frame TSC1TR; Setpoint
597		2	Break lever mainswitch and break lever redundancyswitch status not plausible
624		3	SVS lamp; short circuit to battery
		4	SVS lamp; short circuit to ground
		5	SVS lamp; open load
		12	SVS lamp; powerstage over temperature
630		12	Access error EEPROM
639		14	CAN-Bus 0 "BusOff-Status"

https://truckmanualshub.com/

Deutz TCD3.6 Engine Fault Codes

SPN = Suspect Parameter Number
ASPN = Alternate Suspect Parameter Number
FMI = Failure Mode Identifier

SPN	ASPN	FMI	Description
651		3	Injector 1 (in firing order); short circuit
		4	High side to low side short circuit in the injector 1 (in firing order)
		5	Injector 1 (in firing order); interruption of electric connection
652		3	Injector 2 (in firing order); short circuit
		4	High side to low side short circuit in the injector 2 (in firing order)
		5	Injector 2 (in firing order); interruption of electric connection
653		3	Injector 3 (in firing order); short circuit
		4	High side to low side short circuit in the injector 3 (in firing order)
		5	Injector 3 (in firing order); interruption of electric connection
654		3	Injector 4 (in firing order); short circuit
		4	High side to low side short circuit in the injector 4 (in firing order)
		5	Injector 4 (in firing order); interruption of electric connection
655		3	Injector 5 (in firing order); short circuit
		4	High side to low side short circuit in the injector 5 (in firing order)
		5	Injector 5 (in firing order); interruption of electric connection
656		3	Injector 6 (in firing order); short circuit
		4	High side to low side short circuit in the injector 6 (in firing order)
		5	Injector 6 (in firing order); interruption of electric connection
676		11	Cold start aid relay; open load, relay error.
677		3	Starter relay; short circuit
		4	Starter relay; short circuit
		5	Starter relay; no load error
		12	Starter relay; powerstage over temperature
703		3	Engine running lamp; short circuit to battery
		4	Engine running lamp; short circuit to ground
		5	Engine running lamp; open load
		12	Engine running lamp; powerstage over temperature

https://truckmanualshub.com/

Deutz TCD3.6 Engine Fault Codes

SPN = Suspect Parameter Number
ASPN = Alternate Suspect Parameter Number
FMI = Failure Mode Identifier

SPN	ASPN	FMI	Description
729		5	Cold start aid relay open load
		12	Cold start aid relay; over temperature error
898		9	Timeout Error of CAN-Receive-Frame TSC1TE; Setpoint
975		3	Fan control; short circuit to battery
		4	Fan control; short circuit to ground
		5	Fan control; open load
		12	Fan control; internal error
1079		13	Sensor supply voltage monitor 1 error (ECU)
1080		13	Sensor supply voltage monitor 2 error (ECU)
1109		2	Engine shut off demand ignored
1136		0	Physikal range check high for ECU temperature
		1	Physikal range check low for ECU temperature
		3	Sensor error ECU temperature; signal range check high
		4	Sensor error ECU temperature; signal range check low
1176		3	Sensor error pressure sensor upstream turbine; signal range check high
		4	Sensor error pressure sensor downstream turbine; signal range check high
1180		0	Exhaust gas temperature turbine upstream; out of range, system reaction initiated
		1	Exhaust gas temperature turbine upstream; out of range, system reaction initiated
		3	Sensor error exhaust gas temperature upstream turbine; signal range check high
		4	Sensor error exhaust gas temperature upstream turbine; signal range check low
		11	Sensor exhaust gas temperature upstream turbine; plausibility error
			Exhaust gas temperature upstream turbine; out of range, system reaction initiated
			Exhaust gas temperature upstream turbine; out of range, system reaction initiated

https://truckmanualshub.com/

Deutz TCD3.6 Engine Fault Codes

SPN = Suspect Parameter Number
ASPN = Alternate Suspect Parameter Number
FMI = Failure Mode Identifier

SPN	ASPN	FMI	Description
1188		2	Wastegate; status message from ECU missing
		7	Wastegate actuator; blocked
		11	Turbo charger wastegate actuator; internal error
		13	Wastegate actuator calibration deviation too large, recalibration required
1231		14	CAN-Bus 1 "BusOff-Status"
1235		14	CAN-Bus 2 "BusOff-Status"
1237		2	Override switch; plausibility error
1322		12	Too many recognized misfires in more than one cylinder
1323		12	Too many recognized misfires in cylinder 1 (in firing order)
		12	Too many recognized misfires in cylinder 1 (in firing order)
1324		12	Too many recognized misfires in cylinder 2 (in firing order)
1325		12	Too many recognized misfires in cylinder 3 (in firing order)
1326		12	Too many recognized misfires in cylinder 4 (in firing order)
1327		12	Too many recognized misfires in cylinder 5 (in firing order)
1328		12	Too many recognized misfires in cylinder 6 (in firing order)
1639		0	Sensor error fan speed; signal range check high
		1	Sensor error fan speed; signal range check low
1761		14	Urea tank level; warning threshold exceeded
2621		3	Flush valve burner (EPV DPF-System); short circuit to battery
		4	Flush valve burner (EPV DPF-System); short circuit to ground
		5	Flush valve burner (EPV DPF-System); open load
		12	Flush valve burner (EPV DPF-System); powerstage over temperature
2659		0	Physical range check high for EGR exhaust gas mass flow
		1	Physical range check low for EGR exhaust gas mass flow
		2	AGS sensor temperature exhaust gas mass flow; plausibility error
		12	Exhaust gas recirculation; AGS sensor has "burn off" not performed
			Exhaust gas recirculation AGS sensor; plausibility error

https://truckmanualshub.com/

Deutz TCD3.6 Engine Fault Codes

SPN = Suspect Parameter Number
ASPN = Alternate Suspect Parameter Number
FMI = Failure Mode Identifier

SPN	ASPN	FMI	Description
2791		0	EGR actuator, temperature critical high
		2	EGR actuator, CAN error
		3	EGR actuator supply voltage is above the maximum threshold
		4	EGR actuator supply voltage is below minimum threshold
		6	EGR actuator current is above maximum threshold
		7	EGR actuator, actuator blocked or broken spring detected
		12	EGR actuator, internal electrical fault
		13	EGR actuator, EOL calibration error or learning process aborted or learning process out of range
		16	EGR actuator, temperature high
2797		4	Injector diagnostics; timeout error of short circuit to ground measurement cyl. Bank 0
2798		4	Injector diagnostics; short circuit Bank 0, Bank 1
			Injector diagnostics; timeout error of short circuit to ground measurement cyl. Bank 1
3031		0	AdBlue-Tank temperature: maximum exceeded
		1	DEF-Tank temperature: below minimum
		3	Sensor error urea tank temperature; short circuit to battery
		4	Sensor error urea tank temperature; short circuit to ground
3224		1	Nox sensor upstream of SCR Catalysator; low signal not plausible
		2	NOx Sensor; CAN DLC error
		9	NOx Sensor; CAN Timeout
3234		2	NOx Sensor; CAN DLC error
		9	NOx Sensor; CAN Timeout
		11	Nox Sensor downstream of SCR Catalysator; plausibility error "stuk in range"
3241		0	Sensor SCR catalyst upstream temperature too high; plausibility error
		1	Sensor SCR catalyst upstream temperature too low; plausibility error

https://truckmanualshub.com/

Deutz TCD3.6 Engine Fault Codes

SPN = Suspect Parameter Number
ASPN = Alternate Suspect Parameter Number
FMI = Failure Mode Identifier

SPN	ASPN	FMI	Description
3248		0	Exhaust gas temperature particulate filter downstream; out of range, system reaction initiated
		1	Exhaust gas temperature particulate filter downstream; out of range, system reaction initiated
		2	Sensor exhaust gas temperature downstream DPF; plausibility error
		4	Sensor error particle filter downstream temperature; signal range check low
3251		0	Physical range check high for differential pressure (DPF); shut off regeneration
		1	Physical range check low for differential pressure (DPF); shut off regeneration
3253		2	Sensor differential pressure (DPF); plausibility error
		3	Sensor error differential pressure (DPF); signal range check high
		4	Sensor error differential pressure (DPF); signal range check low
3361		3	Urea dosing valve; short circuit to battery
		4	Urea dosing valve; short circuit to ground
		7	AdBlue dosing valve blocked (SCR)
3519		3	DEF quality sensor, internal temperature sensor short circuit to battery or open lead
		4	DEF quality sensor, internal temperature sensor short circuit to ground
		12	DEF tank temperature, temperature too high
		13	Temperature at UQS invalid
3520		3	DEF quality sensor, short circuit to battery or open load
		4	DEF quality sensor, short ciruit to ground
		13	Urea quality at UQS invalid
3532		3	DEF level at UQS out of max. physical range
		3	Sensor error urea tank level; signal range check high
		4	Quality at UQS of of min. physical range
		4	Sensor error urea tank level; signal range check low
3699		2	DPF differential pressure sensor and a further sensor or actuator CRT system defective
		14	Maximum stand-still-duration reached; oil exchange required
			Temperature sensor us. and ds. DOC simultaneously defect
3711		12	Regeneration temperature (PFltRgn LigtOff) not reached; regeneration aborted
3936		14	Standstill request ignored too long

https://truckmanualshub.com/

Deutz TCD3.6 Engine Fault Codes

SPN = Suspect Parameter Number
ASPN = Alternate Suspect Parameter Number
FMI = Failure Mode Identifier

SPN	ASPN	FMI	Description
4243		11	SCR system heater diagnostic reports error; shut off SCR-system
4334		0	Urea pump pressure; out of range
		1	Urea pump pressure; out of range
		3	Sensor error urea pump pressure; signal range check high
		4	Sensor error urea pump pressure; signal range check low
4341		3	SCR-heater urea supplyline; short circuit to battery
		4	SCR-heater urea supplyline; short circuit to ground
		5	SCR heater relay urea supplyline; open load
4343		3	SCR heater urea pressureline; short circuit to battery
		4	SCR heater urea pressureline; short circuit to ground
		5	SCR heater relay urea pressureline; open load
		11	General pressure check error (SCR)
4345		3	SCR heater urea returnline; short circuit to battery
		4	SCR heater urea returnline; short circuit to ground
		5	SCR heater relay urea returnline; open load
		11	Sensor backflow line pressure (SCR); plausibility error
4360		0	Physical range check high for urea catalyst upstream temperature
		1	Physical range low for urea catalyst upstream temperature
		3	Sensor error urea catalyst exhaust gas temperature upstream; signal range check high
		4	Sensor error urea catalyst exhaust gas temperature upstream; signal range check low
4365		0	Urea tank temperature too high
4366		3	SCR Tank heating valve; short circuit to battery
		4	SCR Tank heating valve; short circuit to ground
		5	SCR main relay (secondary side): open load
		12	SCR-heater relay urea tank powerstage output; over temperature
			SCR main relay; short circuit
			SCR Tank heating valve; open load
4374		13	Pressure stabilisation error dosing valve (SCR)

https://truckmanualshub.com/

Deutz TCD3.6 Engine Fault Codes

SPN = Suspect Parameter Number
ASPN = Alternate Suspect Parameter Number
FMI = Failure Mode Identifier

SPN	ASPN	FMI	Description
4375		3	Urea pump motor; short circuit to battery
		4	Urea pump motor; short circuit to ground
		5	Urea pump motor; open load
4376		3	SCR reversing valve; short circuit to battery
		4	SCR reversing valve; short circuit to ground
		5	SCR reversing valve; open load
		12	SCR reversing valve; over temperature
4765		0	Physical range check high for exhaust gas temperature upstream (DOC)
		1	Physical range check low for exhaust gas temperature upstream (DOC)
4766		0	Physical range check high for exhaust gas temperature downstream (DOC)
		1	Physical range check low for exhaust gas temperature downstream (DOC)
4768		2	Sensor exhaust gas temperature upstream (DOC); plausibility error
		3	Sensor error exhaust gas temperature upstream (DOC); signal range check high
		4	Sensor error exhaust gas temperature upstream (DOC); signal range check low
4769		2	Sensor exhaust gas temperature (DOC) downstream; plausibility error
		3	Sensor error exhaust gas temperature downstream (DOC); signal range check high
		4	Sensor error exhaust gas temperature downstream (DOC); signal range check low
			Sensor exhaust gas temperature downstream (DOC); plausibility error
5763		0	Warning threshold for an internal actuator error exceeded, <4L EGR actuator and >4L Air Intake Flap
		1	Shutoff threshold for an internal actuator error exceeded, <4L EGR actuator and >4L Air Intake Flap
		3	Position sensor error of actuator EGR-Valve (2.9; 3.6) Signal range check high
		3	Actuator EGR-Valve (2.9; 3.6); short circuit to battery
		4	Actuator EGR-Valve (2.9; 3.6); short circuit to ground; Voltage below threshold
		5	Actuator EGR-Valve (2.9; 3.6); Open load on ECU output is detected
		6	Actuator error EGR-Valve; signal range check high
		7	Actuator position for EGR-Valve (2.9; 3.6)
		11	Power stage over temperature due to high current
20521		5	Actuator error EGR-Valve (2.9;3.6) Signal range check low

https://truckmanualshub.com/

Deutz TCD3.6 Engine Fault Codes

SPN = Suspect Parameter Number
ASPN = Alternate Suspect Parameter Number
FMI = Failure Mode Identifier

SPN	ASPN	FMI	Description
23006	64254	3	Controller mode switch; short circuit to battery
		4	Controller mode switch; short circuit to ground
23008	64256	1	Manipulation control was triggered
		2	Timeout error in Manipulation control
23009	64257	9	Pressure Relief Valve (PRV) reached maximun allowed opening count
		10	Pressure relief valve (PRV) reached maximun allowed open time
23090		2	Engine Brake Pre-Selection switch; Plausibiliy Error
23212	64460	9	Timeout Error of CAN-Receive-Frame ComEngPrt; Engine Protection
23216	64464	9	Timeout Error of CAN-Receive-Frame PrHtEnCmd; pre-heat command, engine command
23240	64488	9	Timeout CAN-message FunModCtl; Function Mode Control
23330	64578	14	Immobilizer status; fuel blocked
23350	64598	4	Injector cylinder-bank 1; short circuit
23352	64600	4	Injector cylinder-bank 2; short circuit
23354	64602	12	Injector powerstage output defect
23450	64698	2	Multiple Stage Switch constant speed; plausibility error
		3	Multiple Stage Switch constant speed; short circuit to battery
		4	Multiple Stage Switch constant speed; short circuit to ground
23451	64699	2	Multiple Stage Switch engine speed control parameter; plausibility error
		3	Multiple Stage Switch engine speed control parameter; short circuit to battery
		4	Multiple Stage Switch engine speed control parameter; short circuit to ground
23452	64700	2	Multiple Stage Switch engine torque limitation curve; plausibility error
		3	Multiple Stage Switch engine torque limitation curve; short circuit to battery
		4	Multiple Stage Switch engine torque limitation curve; short circuit to ground

https://truckmanualshub.com/

Deutz TCD3.6 Engine Fault Codes

SPN = Suspect Parameter Number
ASPN = Alternate Suspect Parameter Number
FMI = Failure Mode Identifier

SPN	ASPN	FMI	Description
23470	64718	2	Pressure Relief Valve (PRV) forced to open
		7	Maximum rail pressure in limp home mode exceeded (PRV)
		11	Pressure Relief Valve (PRV) error; Rail pressure out of tolerance range
		12	Pressure Relief Valve (PRV) forced to open; system reaction initiated
		14	Pressure Relief Valve (PRV) is open
			Rail pressure out of tolerance range
23550	64798	12	T50 start switch active for too long
23601	64849	13	Sensor supply voltage monitor 3 error (ECU)
23602	64850	0	Fan control; out of range, system reaction initiated
23603	64851	9	Timeout Error of CAN-Receive-Frame AMB; Ambient Temperature Sensor
23605	64853	9	Timeout Error of CAN-Receive-Frame TSC1AE; Traction Control
23606	64854	9	Timeout Error of CAN-Receive-Frame TSC1AR; Retarder
23612	64860	12	ECU reported internal software error
		14	Softwarereset CPU
			Internal software error ECU
23613	64861	0	Rail pressure disrupted
		1	Minimum rail pressure exceeded (RailMeUn3)
		2	Setpoint of metering unit in overrun mode not plausible
23615	64863	3	Metering unit (Fuel-System); short circuit to battery
		4	Metering unit (Fuel-System); short circuit to ground
		5	Metering unit (Fuel-System); open load
		12	Metering unit (Fuel-System); powerstage over temperature
23619	64867	2	Physical range check high for exhaust gas temperature upstrem (SCR-CAT)
23632	64880	0	Pressure overload of SCR-System
		1	Pressure build-up error SCR-System
		2	Metering control is not performed in time error
		16	Pump pressure SCR metering unit too high
		18	Pump pressure SCR metering unit too low
23633	64881	11	Nox conversion rate insufficient

https://truckmanualshub.com/

Deutz TCD3.6 Engine Fault Codes

SPN = Suspect Parameter Number
ASPN = Alternate Suspect Parameter Number
FMI = Failure Mode Identifier

SPN	ASPN	FMI	Description
23698	64946	11	Shut off request from supervisory monitoring function
23704		12	Timeout Error of CAN-Transmit_Frame EEC3
23717	64965	12	Timeout Error of CAN-Transmit-Frame AmbCon; Weather environments
23718	64966	3	SCR main relay (primary side); short circuit to battery
		4	SCR main relay (primary side); short circuit to ground
		5	SCR main relay (primary side); open load
		12	SCR mainrelay; powerstage over temperature (only CV56B)
			SCR mainrelay; short circuit to battery (only CV56B)
			SCR mainrelay; short circuit to ground (only CV56B)
			SCR mainrelay; open load (only CV56B)
23719	64967	3	SCR heater urea supplymodule; short circuit to battery
		4	SCR heater urea supplymodule; short circuit to ground
		5	SCR heater relay urea supply module; open load
23720	64968	2	Urea supply module heater temperature; plausibility error
		8	Urea supply module heater temperature; signal disrupted
23721	64969	2	Urea supply module heater temperature; plausibility error
		8	Urea supply module temperature; signal disrupted
		11	Urea supply module temperature measurement not available
23722	64970	8	Urea supply module PWM signal; signal disrupted

https://truckmanualshub.com/

Deutz TCD3.6 Engine Fault Codes

SPN = Suspect Parameter Number
ASPN = Alternate Suspect Parameter Number
FMI = Failure Mode Identifier

SPN	ASPN	FMI	Description
23723	64971	11	Detection of AdBlue filled SCR system in Init-State
23766	65014	9	Timeout Error of CAN-Receive-Frame Active TSC1AE
23767	65015	9	Timeout Error of CAN-Receive-Frame Passive TSC1AE
23768	65016	9	Timeout Error of CAN-Receive-Frame Active TSC1AR
23769	65017	9	Timeout Error of CAN-Receive-Frame Passive TSC1AR
23770	65018	9	Timeout Error of CAN-Receive-Frame Passive TSC1DE
23776	65024	9	Timeout Error of CAN-Receive-Frame TSC1TE - active
23777	65025	9	Passive Timeout Error of CAN-Receive-Frame TSC1TE; Setpoint
23778	65026	9	Active Timeout Errorof CAN-Receive-Frame TSC1TR
23779	65027	9	Passive Timeout Error of CAN-Receive-Frame TSC1TR
23788	65036	0	Turbo charger wastegate; CAN Fehler
		12	Timeout Error of CAN-Transmit-Frame TrbCH; Status Wastegate
23793	65041	9	Timeout Error of CAN-Receive-Frame UAA10; AGS sensor service message
23794	65042	9	Timeout Error of CAN-Receive-Frame UAA11; AGS sensor data
23803	65051	9	Timeout Error of CAN-Receive-Frame RxEngPres; Status burner airpump
23867	65115	12	Timeout Error of CAN-Transmit-Frame UAA1 on CAN 2; Burner Air Pump Control
23895	65143	13	Check of missing injector adjustment value programming (IMA) injector 1 (in firing order)
23896	65144	13	check of missing injector adjustment value programming (IMA) injector 2 (in firing order)
23897	65145	13	check of missing injector adjustment value programming (IMA) injector 3 (in firing order)
23898	65146	13	check of missing injector adjustment value programming (IMA) injector 4 (in firing order)
23899	65147	13	check of missing injector adjustment value programming (IMA) injector 5 (in firing order)
23900	65148	13	check of missing injector adjustment value programming (IMA) injector 6 (in firing order)
23910	65158	0	Air Pump; internal error
		6	Air Pump; over current
		7	Air pump; CAN communication interrupted no purge function available
		9	Air Pump; CAN communication lost
		12	Air Pump; internal error
		14	Air pump doesn´t achieve air mass flow setpoint

https://truckmanualshub.com/

Deutz TCD3.6 Engine Fault Codes

SPN = Suspect Parameter Number
ASPN = Alternate Suspect Parameter Number
FMI = Failure Mode Identifier

SPN	ASPN	FMI	Description
23911	65159	0	Burner dosing valve (DV2); overcurrent at the end of the injection phase
		3	Burner dosing valve (DV2); short circuit to battery
		4	Burner dosing valve (DV2); short circuit to ground
		7	Burner dosing valve (DV2); blocked closed
		11	Burner dosing valve (DV2); short circuit high side powerstage
		12	Burner dosing valve (DV2); powerstage over temperature
23912	65160	0	Physical range check high for burner dosing valve (DV2) downstream pressure; shut off regeneration
		1	Physical range check low for burner dosing valve (DV2) downstream pressure; shut off regeneration. When burner injector is actuated, the measured pressure does not rise above ca. 1250mbar abs (expected: ca. 2400mbar).
		2	Burner dosing valve (DV2) downstream pressure sensor; plausibility error
		3	Sensor error burner dosing valve (DV2) downstream pressure sensor; signal range check high
		4	Sensor error burner dosing valve (DV2) downstream pressure sensor; signal range check low
23913	65161	3	Sensor error glow plug control diagnostic line voltage; signal range check high
		4	Sensor error glow plug control diagnostic line voltage; signal range check low
23914	65162	3	Glow plug control; short circuit to battery
		4	Glow plug control; short circuit to ground
		5	Glow plug control; open load
		11	Glow plug control; internal error
		12	Glow plug control; powerstage over temperature
23915	65163	0	HCI dosing valve (DV1); overcurrent at the end of the injection phase
		3	HCI dosing valve (DV1); short circuit to battery
		4	HCI dosing valve (DV1); short circuit to ground
		7	HCI dosing valve (DV1); blocked
		11	HCI dosing valve (DV1); short circuit high side powerstage
		12	HCI dosing valve (DV1); powerstage over temperature
23916	65164	0	Physical range check high for HCI dosing valve (DV1) downstream pressure; shut off regeneration
		1	Physical range check low for HCI dosing valve (DV1) downstream pressure; shut off regeneration
		2	Sensor HCI dosing valve (DV1) downstream pressure; plausibility error
		3	Sensor error HCI dosing valve (DV1) downstream pressure; signal range check high
		4	Sensor error HCI dosing valve (DV1) downstream pressure; signal range check low

https://truckmanualshub.com/

Deutz TCD3.6 Engine Fault Codes

SPN = Suspect Parameter Number
ASPN = Alternate Suspect Parameter Number
FMI = Failure Mode Identifier

SPN	ASPN	FMI	Description
23917	65165	0	Physical range check high for DV1 & DV2 upstream pressure; shut off regeneration
		1	Physical range check low for DV1 & DV2 upstream pressure; shut off regeneration
		2	Sensor DV1 & DV2 upstream pressure; plausibility error
		3	Sensor error DV1 & DV2 upstream pressure; signal range check high
		4	Sensor error DV1 & DV2 upstream pressure; signal range check low
23918	65166	0	Physical range check high for DV1 & DV2 upstream temperature; shut off regeneration
		1	Physical range check low for DV1 & DV2 upstream temperature; shut off regeneration
		2	Sensor DV1 & DV2 upstream temperature; plausibility error
		3	Sensor error DV1 & DV2 upstream temperature; signal range check high
		4	Sensor error DV1 & DV2 upstream temperature; signal range check low
23919	65167	0	Physical range check high for airpump pressure; shut off regeneration
		1	Physical range check low for airpump pressure; shut off regeneration
		2	Sensor airpump pressure; plausibility error
		3	Sensor error airpump pressure; signal range check high
		4	Sensor error airpump pressure; signal range check low
23920	65168	0	Physical range check high for exhaustgas back pressure burner; shut off regeneration
		1	Physical range check low for exhaustgas back pressure burner; shut off regeneration
		2	Sensor exhaustgas back pressure; plausibility error
		3	Sensor error exhaustgas back pressure burner; signal range check high
		4	Sensor error exhaustgas back pressure burner; signal range check low
23921	65169	0	Physical range check high for burner temperature
		1	Physical range check low for burner temperature
		2	Sensor burner temperature; plausibility error
		3	Sensor error burner temperature; signal range check high
		4	Sensor error burner temperature; signal range check low
		11	Sensor burner temperature; plausibility error
23922	65170	3	Burner shut of valve; short circuit to battery
		4	Burner shut of valve; short circuit to ground
		5	Burner shut off valve; open load
		7	Shut off valve: blocked
		12	Over temperature error on burner shut of valve

https://truckmanualshub.com/

Deutz TCD3.6 Engine Fault Codes

SPN = Suspect Parameter Number
ASPN = Alternate Suspect Parameter Number
FMI = Failure Mode Identifier

SPN	ASPN	FMI	Description
23924		4	Short circuit to ground actuator relay 2
23925		3	Short cicuit to battery error of actuator relay 3
		4	Short circuit to ground actuator relay 3
23926		4	Short cirucit to dround actuator relay 4
23927		3	Short cicuit to battery error of actuator relay 5
23929	65177	0	Fuel Balance Control integrator injector 1 (in firing order); maximum value exceeded
		1	Fuel Balance Control integrator injector 1 (in firing order); minimum value exceeded
23930	65178	0	Fuel Balance Control integrator injector 2 (in firing order); maximum value exceeded
		1	Fuel Balance Control integrator injector 2 (in firing order); minimum value exceeded
23931	65179	0	Fuel Balance Control integrator injector 3 (in firing order); maximum value exceeded
		1	Fuel Balance Control integrator injector 3 (in firing order); minimum value exceeded
23932	65180	0	Fuel Balance Control integrator injector 4 (in firing order); maximum value exceeded
		1	Fuel Balance Control integrator injector 4 (in firing order); minimum value exceeded
23933	65181	0	Fuel Balance Control integrator injector 5 (in firing order); maximum value exceeded
		1	Fuel Balance Control integrator injector 5 (in firing order); minimum value exceeded
23934	65182	0	Fuel Balance Control integrator injector 6 (in firing order); maximum value exceeded
		1	Fuel Balance Control integrator injector 6 (in firing order); minimum value exceeded
23935	65183	12	Timeout Error of CAN-Transmit-Frame EEC3VOL1; Engine send messages
23936	65184	12	Timeout Error of CAN-Transmit-Frame EEC3VOL2; Engine send messages
23938	65186	9	Timeout Error (BAM to packet) for CAN-Receive-Frame AT1IGCVol1 information; factors & Sensorcalibration for NOX Sensor (SCR-system upstream cat; DPF- system downstream cat)
23939	65187	9	Timeout Error (BAM to BAM) for CAN-Receive-Frame AT1IGCVol1 information; factors & Sensorcalibration for NOX Sensor (SCR-system upstream cat; DPF- system downstream cat)
23940	65188	9	Timeout Error (PCK2PCK) for CAN-Receive-Frame AT1IGCVol1 information; factors & Sensorcalibration for NOX Sensor (SCR-system upstream cat; DPF-system downstream cat)
23941	65189	9	Timeout Error (BAM to packet) for CAN-Receive-Frame AT1OGCVol2 information; factors & Sensorcalibration for NOX Sensor (SCR-system downstream cat; DPF- system downstream cat)
23942	65190	9	Timeout Error (BAM to BAM) for CAN-Receive-Frame AT1OGCVol2 information; factors & Sensorcalibration for NOX Sensor (SCR-system downstream cat; DPF- system downstream cat)

https://truckmanualshub.com/

Deutz TCD3.6 Engine Fault Codes

SPN = Suspect Parameter Number
ASPN = Alternate Suspect Parameter Number
FMI = Failure Mode Identifier

SPN	ASPN	FMI	Description
23943	65191	9	Timeout Error (PCK2PCK) for CAN-Receive-Frame AT1OGCVol2 information; factors & Sensorcalibration for NOX Sensor (SCR-system downstream cat; DPF- system downstream cat)
23946	65194	0	Zerofuel calibration injector 1 (in firing order); maximum value exceeded
		1	Zerofuel calibration injector 1 (in firing order); minimum value exceeded
23947	65195	0	Zerofuel calibration injector 2 (in firing order); maximum value exceeded
		1	Zerofuel calibration injector 2 (in firing order); minimum value exceeded
23948	65196	0	Zerofuel calibration injector 3 (in firing order); maximum value exceeded
		1	Zerofuel calibration injector 3 (in firing order); minimum value exceeded
23949	65197	0	Zerofuel calibration injector 4 (in firing order); maximum value exceeded
		1	Zerofuel calibration injector 4 (in firing order); minimum value exceeded
23950	65198	0	Zerofuel calibration injector 5 (in firing order); maximum value exceeded
		1	Zerofuel calibration injector 5 (in firing order); minimum value exceeded
23951	65199	0	Zerofuel calibration injector 6 (in firing order); maximum value exceeded
		1	Zerofuel calibration injector 6 (in firing order); minimum value exceeded
23960	65208	0	EGR cooler downstream temperature; out of range, system reaction initiated
		1	EGR cooler downstream temperature; out of range, system reaction initiated
			Exhaust gas temperature EGR downstream; out of range, system reaction initiated
			Exhaust gas temperature EGR downstream; out of range, system reaction initiated
23973	65221	14	SCR Tamper detection; derating timer below limit 1
23974	65222	14	SCR Tamper detection; derating timer below limit 2
23975	65223	14	Urea quality; derating timer below limit 1
23976	65224	14	Urea qulaity; derating timer below limit 2
23977	65225	14	Urea tank level; derating timer below limit 1
23978	65226	14	Urea tank level; derating timer below limit 2
23980	65228	14	Bad quality of reduction agent detected
23981	65229	11	Urea-tank without heating function (heating phase)
23982	65230	0	Powerstage diagnosis disabled; high battery voltage
		1	Powerstage diagnosis disabled; low battery voltage

https://truckmanualshub.com/

Deutz TCD3.6 Engine Fault Codes

SPN = Suspect Parameter Number
ASPN = Alternate Suspect Parameter Number
FMI = Failure Mode Identifier

SPN	ASPN	FMI	Description
23984		3	UB6; Short circuit to battery error of actuator relay 6
23986		4	Actuator relay 5; voltage measured by ECU is out of target range
23987		4	Actuator relay 6; voltage measured by ECU is out of target range
23988	65236	3	Charging lamp; short circuit to battery
		4	Charging lamp; short circuit to ground
		5	Charging lamp; open load
		12	Charging lamp; over temperature
23989	65237	0	Fuel Balance Control integrator injector 7 (in firing order); maximum value exceeded
		1	Fuel Balance Control integrator injector 7 (in firing order); minimum value exceeded
23990	65238	0	Fuel Balance Control integrator injector 8 (in firing order); maximum value exceeded
		1	Fuel Balance Control integrator injector 8 (in firing order); minimum value exceeded
23992	65240	9	Timeout Error of CAN-Receive-Frame DM19Vol1; NOX sensor upstream
23993	65241	9	Timeout Error of CAN-Receive-Frame DM19Vol2; NOX sensor downstream
23995	65243	13	check of missing injector adjustment value programming (IMA) injector 7 (in firing order)
23996	65244	13	check of missing injector adjustment value programming (IMA) injector 8 (in firing order)
23998	65246	4	Injector cylinder bank 2 slave; short circuit
23999	65247	12	Injector powerstage output Slave defect
24000	65248	3	Injector 7 (in firing order); short circuit
		4	High side to low side short circuit in the injector 7 (in firing order)
		5	Injector 7 (in firing order); interruption of electric connection
24001	65249	3	Injector 8 (in firing order); short circuit
		4	High side to low side short circuit in the injector 8 (in firing order)
		5	Injector 8 (in firing order); interruption of electric connection
24004	65252	12	Too many recognized misfires in cylinder 7 (in firing order)
24005	65253	12	Too many recognized misfires in cylinder 8 (in firing order)

https://truckmanualshub.com/

Deutz TCD3.6 Engine Fault Codes

SPN = Suspect Parameter Number
ASPN = Alternate Suspect Parameter Number
FMI = Failure Mode Identifier

SPN	ASPN	FMI	Description
24011	65259	0	Zerofuel calibration injector 7 (in firing order); maximum value exceeded
		1	Zerofuel calibration injector 7 (in firing order); minimum value exceeded
24012	65260	0	Zerofuel calibration injector 8 (in firing order); maximum value exceeded
		1	Zerofuel calibration injector 8 (in firing order); minimum value exceeded
24013	65261	7	Burner operation disturbed
24014	65262	1	Air pressure glow plug flush line; below limit
24016	65264	2	Air Pump; air flow is not plausible
		11	HFM sensor; electrical fault
24017	65265	12	Spark plug control unit (SPCU); internal error
24018	65266	14	DPF wasn´t regenerated, power reduction phase 1 (manuell regeneration request)
24019	65267	11	Air Pump; air lines blocked
24020	65268	14	Engine power; Not enough oxygen for regeneration
24021	65269	11	Burner fuel line pipe leak behind Shut Off Valve
24022	65270	14	DPF wasn´t regenerated, power reduction phase 2 (manuell regeneration request)
24023	65271	14	DPF wasn´t regenerated, warning condition (manuell regeneration mode)
24024	65272	11	Deviation of the exhaust gas temperature setpoint to actual value downstream (DOC) too high
24025	65273	5	DPF system; operating voltage error
		14	Particulate filter; regeneration not succesful
24028	65276	2	CAN message PROEGRActr; plausibility error
24029	65277	2	Timeout Error of CAN-Receive-Frame ComEGRActr - exhaust gas recirculation positioner
24030	65278	7	EGR actuator; internal error
24031	65279	13	EGR actuator; calibration error
24032	65280	2	EGR actuator; status message "EGRCust" is missing
24033	65281	7	EGR actuator; due to overload in Save Mode
24034	65282	3	Disc separator; short circuit to battery
		4	Disc separator; short circuit to ground
		5	Disc Separator; open load
		12	Disc Separator; powerstage over temperature

https://truckmanualshub.com/

Deutz TCD3.6 Engine Fault Codes

SPN = Suspect Parameter Number
ASPN = Alternate Suspect Parameter Number
FMI = Failure Mode Identifier

SPN	ASPN	FMI	Description
24035	65283	12	Injector diagnostics; time out error in the SPI communication
24036	65284	12	Injector diagnostics Slave; time out error in the SPI communication
24037	65285	3	Ashlamp; short circuit to battery
		4	Ashlamp; short circuit to ground
		5	Ashlamp; open load
24038	65286	9	Timeout error of CAN-Receive-Frame ComMS_Sys1TO (error memory Slave); Master-Slave internal CAN message
24039	65287	9	Timeout error of CAN-Receive-Frame ComMS_Sys2TO (error memory Slave); Master-Slave internal CAN message
24040	65288	9	Timeout error of CAN-Receive-Frame ComMS_Sys3TO (error memory Slave); Master-Slave internal CAN message
24041	65289	9	Timeout error of CAN-Receive-Frame ComMS_Sys4TO (error memory Slave); Master-Slave internal CAN message
24042	65290	9	Timeout error of CAN-Receive-Frame ComMS_Sys5TO (error memory Slave); Master-Slave internal CAN message
24043	65291	9	Timeout error of CAN-Receive-Frame ComMS_Sys6TO (error memory Slave); Master-Slave internal CAN message
24044	65292	9	CAN message ComMS_Sys7 not received from slave
24045	65293	9	Master-Slave CAN; Message-Counter-Error of CAN-Receive-Frame ComMSMoFOvR
24046	65294	9	Master-Slave CAN; Checksum-Error of CAN-Receive-Frame ComMSMoFOvR
24047	65295	9	Master-Slave CAN; Messsage-Length-Error of CAN-Receive-Frame ComMSMoFOvR
24048	65296	9	Timeout error CAN message ComMSMoFOvR1TO error memory Slave
24049	65297	9	Message copy error in the Master / Slave data transfer
24052	65300	11	MS ECU reported internal error
24055	65303	4	Spark Plug Control Unit (SPCU); short circuit to ground
24057	65305	2	Electric fuel pump; fuel pressure build up error
24062	65310	12	EAT-system HMI disrupted
24063		3	SCR main relay; short circuit to battery
		4	SCR heater main relay load side (K31 on heating valve (Y31)
		5	SCR heater return line; open load or SCR main relay not connected; or SCR heater pressureline; open load or SCR or SCR relay for suction line not connected or SCR heater supply module; open load or SCR heater tank; open loac
		12	DEF supply module, time for defrosting too long or DEF tank, time for defrosting too long

https://truckmanualshub.com/

Deutz TCD3.6 Engine Fault Codes

SPN = Suspect Parameter Number
ASPN = Alternate Suspect Parameter Number
FMI = Failure Mode Identifier

SPN	ASPN	FMI	Description
24065		0	Pressure sensor upstream SCR-CAT, pressure above upper physical threashold
		1	Pressure sensor upstream SCR-CAT, pressure below lower physical threashold
		2	Pressure sensor upstream SCR-CAT, plausibility error
		3	Pressure sensor upstream SCR-CAT, short circuit battery or open load
		4	Pressure sensor upstream SCR-CAT, short circuit ground
24067		0	DEF supply module, heater temperature above upper physical threshold
		1	DEF supply module, heater temperature below lower physical threshold
		2	Supply module heather temperature, plausibility error
24068	65316	2	Master ECU and Slave ECU have been identified as the same types
24069	65317	9	Timeout Error of CAN-Receive-Frame MSMon_FidFCCTO; Master-Slave CAN communication faulty
24074		9	NOx sensor downstream SCR-CAT, sensor internally open load
24075		11	NOx sensor downstream SCR-CAT, sensor internally short circuit
24076		9	NOx sensor downstream SCR-CAT, sensor internally open line
24077		11	NOx sensor upstream SCR-CAT, sensor internally short circuit
24078		9	NOx sensor downstream SCR-CAT, lambda value above upper physical threshold
24079		9	NOx sensor downstream SCR-CAT, lambda value below lower physical threshold
24080		9	NOx sensor upstream SCR-CAT, lambda value above upper physical threshold
24081		9	NOx sensor upstream SCR-CAT, lambda value below lower physical threshold
24083		9	NOx sensor downstream SCR-CAT, NOx value below minimum value
24085		9	NOx sensor upstream SCR-CAT, NOx value below lower physical threshold

https://truckmanualshub.com/

Deutz TCD3.6 Engine Fault Codes

SPN = Suspect Parameter Number
ASPN = Alternate Suspect Parameter Number
FMI = Failure Mode Identifier

SPN	ASPN	FMI	Description
24097	65345	9	Timeout error of CAN-Transmit-Frame DPFBrnAirPmpCtl
24098	65346	9	Timeout error of CAN-Transmit-Frame ComDPFBrnPT
24099	65347	9	Timeout error of CAN-Transmit-Frame ComDPFC0
24100	65348	9	Timeout error of CAN-Transmit-Frame ComDPFHisDat
24101	65349	9	Timeout error of CAN-Transmit-Frame ComDPFTstMon
24102	65350	9	Timeout error of CAN-Receive-Frame ComRxDPFBrnAirPmpCtl
24103	65351	9	Timeout error of CAN-Receive-Frame ComRxDPFBrnAirPmp
24104	65352	9	Timeout error of CAN-Receive-Frame ComRxDPFCtl
24105	65353	9	Timeout error of CAN-Transmit-Frame ComEGRMsFlw
24106	65354	9	Timeout error of CAN-Receive-Frame ComRxEGRMsFlw1
24107	65355	9	Timeout error of CAN-Receive-Frame ComRxEGRMsFlw2
24108	65356	9	Timeout error of CAN-Transmit-Frame ComEGRTVActr
24109	65357	9	Timeout error of CAN-Receive-Frame ComRxEGRTVActr
24110	65358	9	Timeout error of CAN-Transmit-Frame ComETVActr
24111	65359	9	Timeout error of CAN-Receive-Frame ComRxETVActr
24112	65360	9	Timeout ComITVActr
24113	65361	9	Timeout error of CAN-Receive-Frame ComRxITVActr
24114	65362	9	Timeout error of CAN-Transmit-Frame A1DOC
24115	65363	9	Timeout error of CAN-Transmit-Frame AT1S

https://truckmanualshub.com/

Deutz TCD3.6 Engine Fault Codes

SPN = Suspect Parameter Number
ASPN = Alternate Suspect Parameter Number
FMI = Failure Mode Identifier

SPN	ASPN	FMI	Description
24116	65364	9	Timeout error of CAN-Transmit-Frame SCR2
24117	65365	9	Timeout error of CAN-Transmit-Frame SCR3
24118	65366	9	Timeout error of CAN-Receive-Frame ComRxCM0
24119	65367	9	Timeout error of CAN-Receive-Frame ComRxCustSCR2
24120	65368	9	Timeout error of CAN-Receive-Frame ComRxSCRHtDiag
24121	65369	9	Timeout error of CAN-Receive-Frame ComRxTrbChActr
24122	65370	9	Timeout error of CAN-Receive-Frame ComRxUQSens
24123	65371	9	Timeout error of CAN-Receive-Frame ComSCRHtCtl
24124	65372	9	Timeout error of CAN-Receive-Frame ComTxAT1IMG
24125	65373	9	Timeout error of CAN-Receive-Frame ComTxTrbChActr
24141		7	DEF dosing valve, dosing valve blocked
24147		7	SCR System, reverting valve blocked
		13	SCR System, pressure build up not possible
24152		2	Urea Quality Sensor, Timout CAN message
24153		2	Urea tank level & urea tank temperature via CAN bus, timeout of CAN message
24156		9	Timeout error of CAN-Receive-Frame ComRxEBC2
24175		0	SCR-CAT, Nox emissions above minimum threshold
24177		7	SCR System, DEF suction line blocked
24178		7	SCR System, DEF pressure ot of range
24190		14	Not enough urea in tank or low urea quality or hardware tampering failure is detected or hardware failure is detected
24191		14	A low DEF tank level or a low DEF quality is detected or hardware tampering or hardware failures
24193		8	The standstill-regeneration mode time exceeds the long limit threshold; Vehicle was too long or too often in standstill mode; Change oil and reset counter
24194		8	The standstill-regeneration mode time exceeds the short limit threshold; Vehicle was too long or too often within a short time in standstill mode; Change oil and reset counter
24195		14	Standstill request due to crystalization ignored too long

https://truckmanualshub.com/

ECGenius 150 Transmission Fault Codes

SPN = Suspect Parameter Number
FMI = Failure Mode Identifier

SPN	Description	FMI	FMI Signification	Transmission Behavior
31	Synchro Position	3	High position error	High range disabled
		4	Reverse position error	Engage if no forward motion
64	CVT Oil Sump Temperature	0	High temperature Alarm	50% of max torque
		3	Disconnected or out of range	See Note below
		4	Shorted to ground or out of range	See Note below
		16	High temperature Warning	-
91	Accelerator Pedal Position	3	Out of range	Torque as if 0% pedal
		4	Disconnected or out of range	Torque as if 0% pedal
127	CVT Oil Pressure	1	Low pressure Alarm or disconnected	Torque as if 0% pedal
160	CVT Output Speed	0	Overspeed Alarm	-
		4	Lost Signal	Ratio underdrive
161	CVT Input Speed	0	Overspeed Alarm	-
		4	Lost Signal	Ratio underdrive
177	CVT Oil Inlet Temperature	0	High temperature Alarm	50% of max torque
		3	Disconnected or out of range	See Note below
		4	Shorted to ground or out of range	See Note below
		16	High temperature Warning	-
191	Clutch Speed / Ground Speed	0	Overspeed Alarm	-
		8	Lost Signal while in motion	Ratio underdrive
441	Clutch Temperature	0	High temperature Alarm	0% of max torque, neutral direction control lever to reset
526	CVT Ratio	0	Out of range, Overdrive	-
		1	Out of range, Underdrive	-
581	CVT Ratio Control	16	Error changing to underdrive	-
		18	Error changing to overdrive	-
611	Unknown Engine ID	14	Calibration sequence could not identify engine	Clutches can not be calibrated
734	Clutch Forward	3	Valve disconnected	Torque as if 0% pedal
		13	Clutch not calibrated	Limited performance
735	Clutch Reverse/High	3	Valve disconnected	Torque as if 0% pedal
		13	Clutch not calibrated	Limited performance
-	CAN bus Loss	-	No data received from engine	Consider engine torque is 99%
Note: If one temperature sensor is lost the value from the other sensor is used, if both are lost the temperature is predetermined to a default value of 85°C				

https://truckmanualshub.com/

Schematics

Observe and Obey:

- ☑ Troubleshooting and repair procedures shall be completed by a person trained and qualified on the repair of this machine
- ☑ Immediately tag and remove from service a damaged or malfunctioning machine.
- ☑ Repair any machine damage or malfunction before operating the machine.

Before Troubleshooting:

- ☑ Read, understand and obey the safety rules and operating instructions in the appropriate operator's manual on your machine.
- ☑ Be sure that all necessary tools and test equipment are available and ready for use.

About This Section

There are two groups of schematics in this section.

Electrical Schematics

⚠WARNING Electrocution/burn hazard. Contact with electrically charged circuits could result in death or serious injury. Remove all rings, watches and other jewelry.

Hydraulic Schematics

⚠WARNING Bodily injury hazard. Spraying hydraulic oil can penetrate and burn skin. Loosen hydraulic connections very slowly to allow the oil pressure to dissipate gradually. Do not allow oil to squirt or spray.

https://truckmanualshub.com/

Proximity Switch Legend

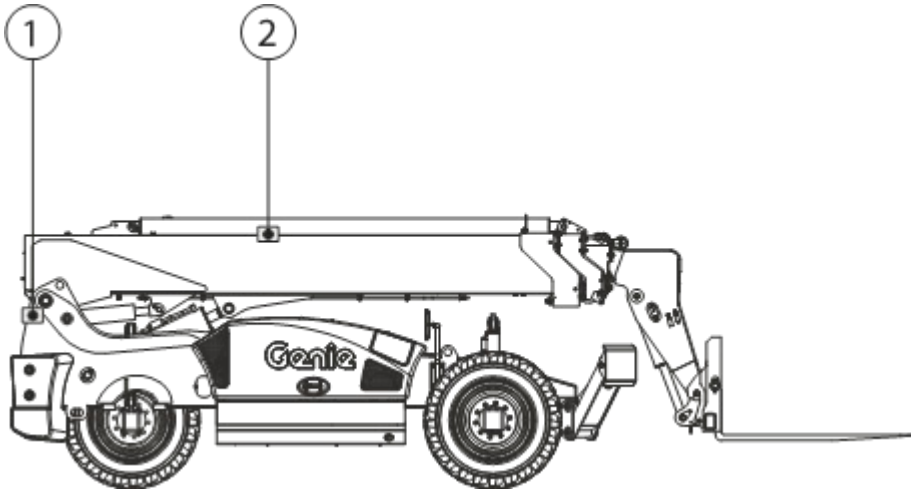

1 Boom Angle Proximity Switch PX2 (under boom pivot pin)
2 Boom Extend Proximity Switch PX1 (under plate at top of boom tube)

https://truckmanualshub.com/

Fuse Panel Layout (120HP & ROW Engine)

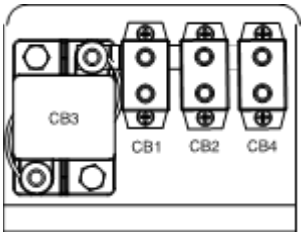

Deutz 74HP T4F

CB4 20A-EAT Power
CB2 30A- ECM Power
CB1 50A-Control System Power
CB3 60A-Glow Plugs

Deutz 120HP T4F

CB4 50A-EAT Power
CB2 50A- ECM Power
CB1 50A-Control System Power
CB3 60A-Glow Plugs

Circuit Breakers located
in the Engine Tray Assembly

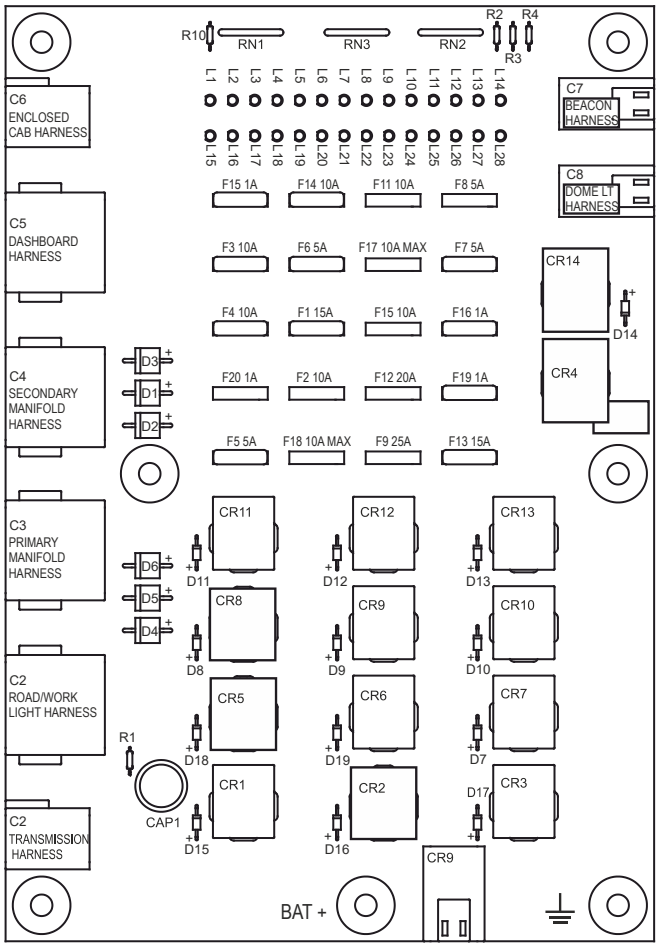

Fuse Board located in the Cab

https://truckmanualshub.com/

Fuse Panel Layout (74HP Engine with CVT Transmission)

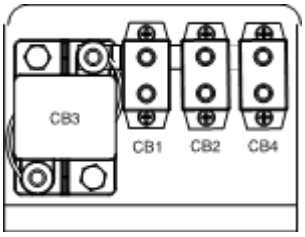

Deutz 74HP T4F

CB4 20A-EAT Power
CB2 30A- ECM Power
CB1 50A-Control System Power
CB3 60A-Glow Plugs

Circuit Breakers located
in the Engine Tray Assembly

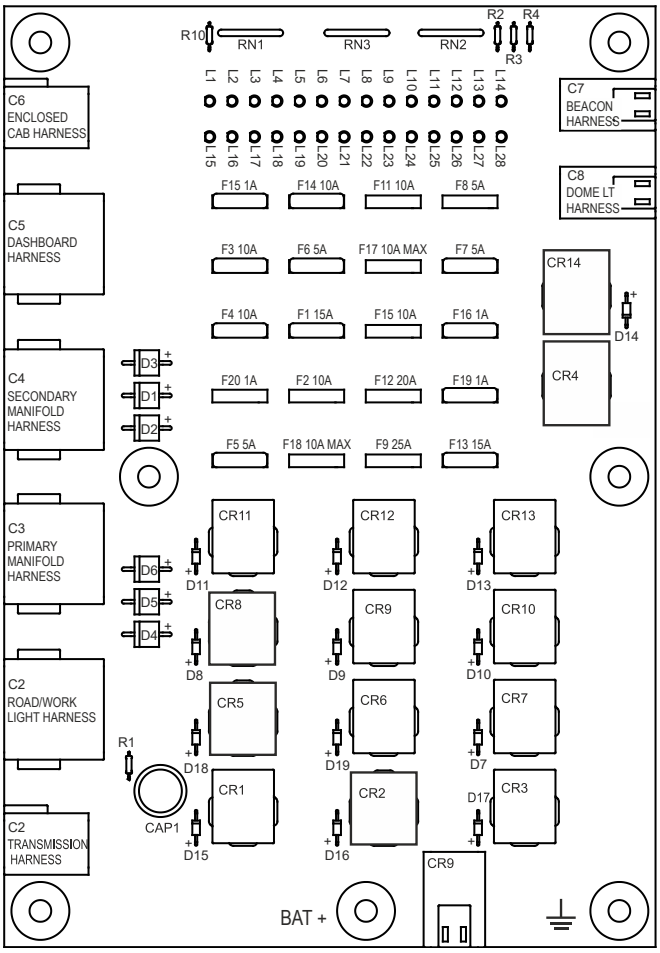

Fuse Board located in the Cab

https://truckmanualshub.com/

Deutz TCD3.6 T4F Module

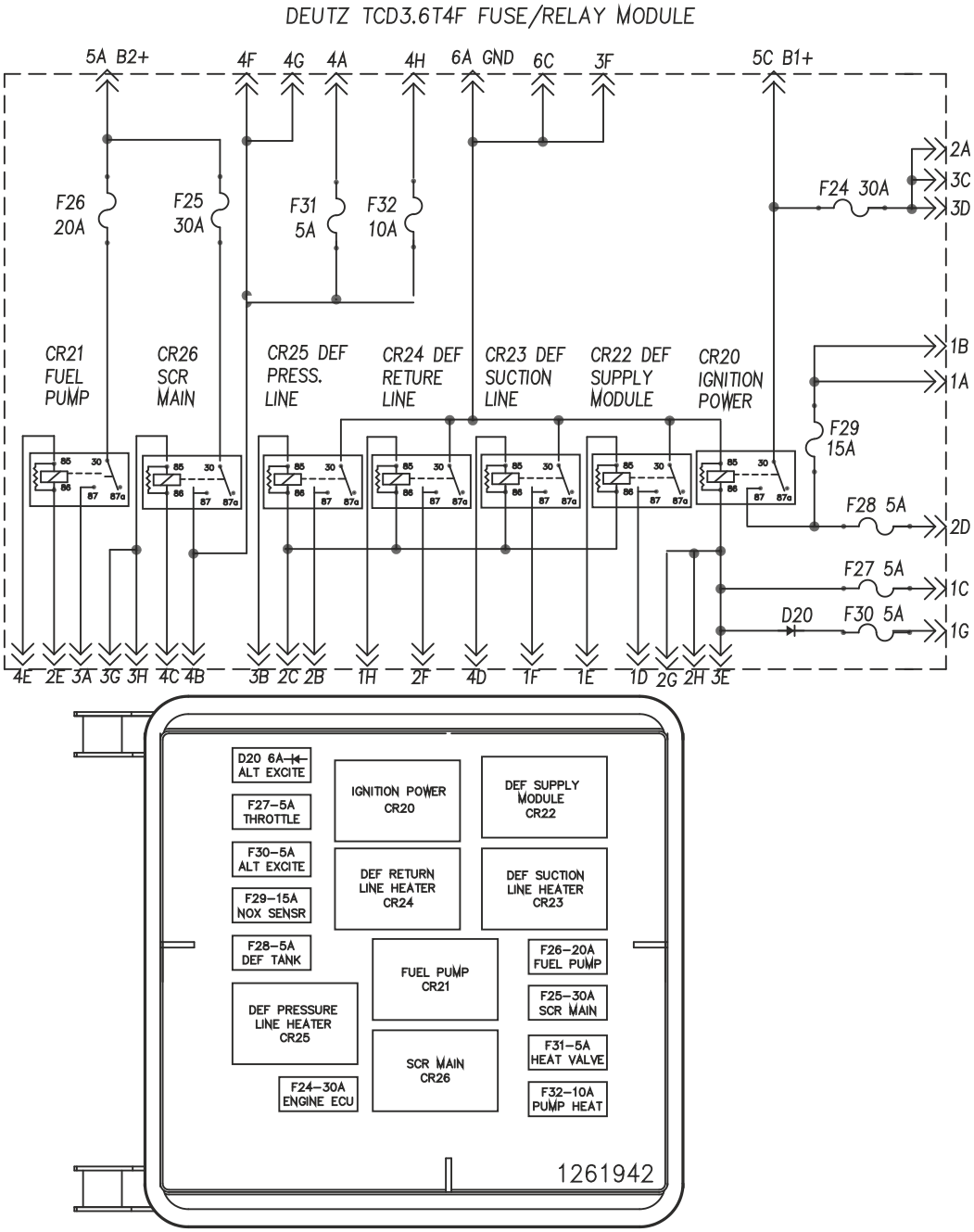

Deutz TCD3.6 T4F Engine only
Located inside of chassis by the ECU

https://truckmanualshub.com/

Electrical Component & Wire Color Abbreviation Legend

Item	Description
ALT	**Alternator**
B	**Battery**
B1	Main Battery
CB	**Circuit Breaker**
CB1	50 Amp Circuit Breaker
CB2	30 Amp or 50 Amp Circuit Breaker
CB3	60 Amp Circuit Breaker
CB4	20 Amp or 50 Amp Circuit Breaker
C	**Capacitor**
C1	4700 uf
CR	**Control Relay**
CR1	Main Power
CR2	Options Power
CR3	Service Horn
CR4	Flasher
CR5	Lights Option
CR6	Sway Enable
CR7	Boom Angle
CR8	Boom Extend
CR9	Forward Enable (ZF/DANA) Drive Enable (CVT)
CR10	Reverse Enable (ZF/DANA)
CR11	Parking Brake Latch
CR13	Joystick Power
CR14	Boom Angle Sensor Monitor

Item	Description
D	**Diode**
EMS	**Engine Management System**
F	**Fuse**
F1	15 Amp - Break/Shift
F2	10 Amp - Aux Hydraulics
F3	10 Amp – Rear Axle Oscillate
F4	10 Amp – Sway/Tilt
F5	5 Amp - Horn
F6	5 Amp - Steer/Differential Switch
F7	1 Amp - Gauge Cluster Power/Backlight
F8	5 Amp - Dome/Beacon Light
F9	25 Amp – HVAC
F10	15 Amp - Windshield Wiper/Washer
F11	10 Amp – Defrost Fan
F12	20 Amp – Lights
F13	15 Amp – Ignition
F14	10 Amp – Power Port
F15	1 Amp - Switch Power
F16	1 Amp – Gauge Cluster ECU
F17	10 Amp Max – Spare
F18	10 Amp Max – Spare
F19	5 Amp - Telematics
F20	1 Amp - Boom Angle Monitor

https://truckmanualshub.com/

Electrical Component & Wire Color Abbreviation Legend

Item	Description
L	**LED Light**
L1	Ignition Power ON
L2	Accessories Power ON
L3	Horn Switch ON
L4	Blinkers ON
L5	Light Switch ON
L6	Sway Enable Coil Power ON
L7	Boom Angle Switch ON
L8	Boom Extend Switch ON
L9	Brake Pressure Switch ON
L10	Reverse ON
L11	Parking Brake Latch ON
L12	Sway Enable Switch ON
L13	Joystick Relay Power ON
L14	Horn Power ON
L15	Lights Power ON
L16	Rear Axle Float Coil Power ON
L17	Rear Axle Fast Coil Power ON
L18	Brake Pressure Switch Power ON
L19	Forward Coil Power ON
L20	Reverse Coil Power ON
L21	PB Release Coil Power ON
L23	Joystick Power
L24	Forward Shift ON
L25	Parking Brake Release OFF
L26	Brake Light Pressure Switch ON
L27	Hazard Switch ON
L28	Boom Angle Switch ON
M	**Motor**
R	**Resistor**

Item	Description
S	**Switch**
S1	Key Start Switch
S4	Boom Extend Switch
S5	Parking Brake Pressure Switch
S6	Service Brake Pressure Switch
S7	Sway Enable Pressure Switch
S8	Sway Enable Switch
S9	Tilt Enable Switch
S10	Steer Select Switch
S11	Left Stabilizer Switch
S12	Right Stabilizer Switch
S13	Differential Lock Switch
S14	Auxiliary Cont. Switch
S15	Horn Switch
S16	Brake Light Pressure Switch
S17	Windshield Wiper Motor Switch
S17	Windshield Washer Switch
S18	Windshield Wiper Motor Switch
S18	Windshield Washer Switch
S19	Dome Light Switch
S21	Enclosed Cab Fan Switch
S22	Road / Work Light Switch
S23	Brake Pressure Warning Switch
S24	Transmission Oil Pressure Switch
S25	Transmission Oil Temp. Switch
S26	EAT Standstill switch
TP	**Throttle Pedal**
TSS	**Turn Signal Shifter**

https://truckmanualshub.com/

Electrical Component & Wire Color Abbreviation Legend

Item	Description
Y	**Valve Coil**
Y1	Sway Left Enable SV1
Y2	Tilt Up Enable SV2
Y3	Sway Right Enable SV3
Y4	Tilt Down Enable SV4
Y5	Parking Brake Release SV5
Y6	Differential Lock SV6
Y7	Rear Axle Float SV7
Y8	Rear Axle Fast SV8
Y9	Sway Enable SV9
YA	Auxiliary A
YB	Auxiliary B
YD	D Transmission
YE	E Transmission
YF	Transmission Forward
YR	Transmission Reverse
YD1A	4Wheel Steer SVD1A
YD1B	Crab Steer SVD1B
YLD	Left Stabilizer Down
YLU	Left Stabilizer Up
YRD	Right Stabilizer Down
YRU	Right Stabilizer Up

Wire Color Legend	
BL	Blue
BL/BK	Blue/Black
BL/RD	Blue/Red
BL/WH	Blue/White
BK	Black
BK/RD	Black/Red
BK/WH	Black/White
BK/YL	Black/Yellow
BR	Brown
GR	Green
GR/BK	Green/Black
GR/RD	Green/Red
GR/WH	Green/White
RD	Red
RD/BK	Red/Black
RD/WH	Red/White
OR	Orange
OR/BK	Orange/Black
OR/RD	Orange/Red
OR/WH	Orange/White
WH	White
WH/BK	White/Black
WH/RD	White/Red
YL	Yellow

https://truckmanualshub.com/

Electrical Symbol Legend

Battery	Coil, solenoid or relay	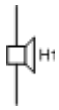 Horn or alarm	Flashing beacon	Gauge
Diode	Hour meter	LED	Fuse with amperage	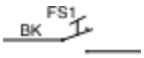 Foot switch
T-circuits connect	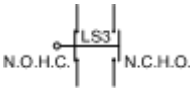 Limit switch	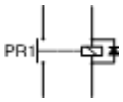 Power relay	Coil with suppression	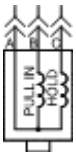 Fuel or RPM solenoid
Connection - no terminal	T-circuits connect at terminal	Circuits crossing no connection	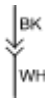 Quick disconnect terminal	Circuit breaker with amperage
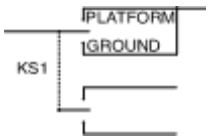 Key switch	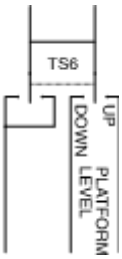 Toggle Switch DPDT	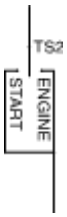 Toggle Switch SPDT	Pump or Motor	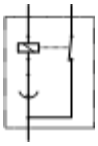 Tilt sensor
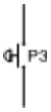 Horn button - normally open	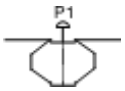 Emergency Stop button - normally closed	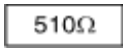 Resistor with ohm value	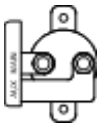 Battery separator	Gauge sending unit
Oil temperature switch normally open	Coolant temperature switch - normally open	Oil pressure switch normally closed	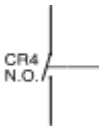 Control relay contact normally open	Diode starting aid, glow plug or flame ignitor

https://truckmanualshub.com/

Hydraulic Symbols Legend

Orifice with size	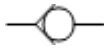 Check valve	Shut off valve	Brake
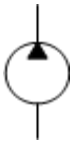 Pump, fixed displacement	Pump, bi-directional variable displacement	Motor, bi-directional	Motor, 2 speed bi-directional
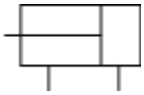 Cylinder, double acting	Pump, prime mover (engine or motor)	Shuttle valve. 2 position, 3 way	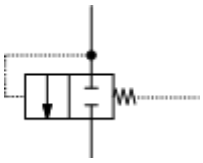 Differential sensing valve
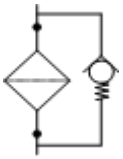 Filter with bypass relief valve	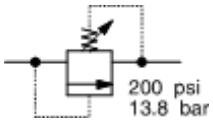 Relief valve with pressure setting	Priority flow regulator valve	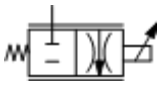 Solenoid operated proportional valve
Directional valve (mechanically activated)	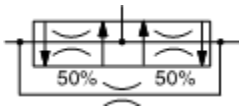 Flow divider/combiner valve	Pilot operated 3 position, 3 way shuttle valve	Solenoid operated 2 position, 3 way directional valve
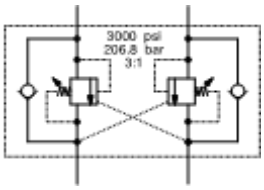 Counterbalance valve with pressure and pilot ratio	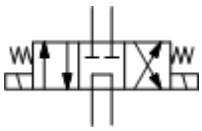 Solenoid operated 3 position 4 way directional valve	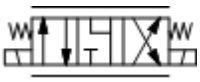 Solenoid operated 3 position, 4 way proportional directional valve	Solenoid valve, 2 position 2 way

https://truckmanualshub.com/

This page intentionally left blank.

https://truckmanualshub.com/

Electrical Schematic - Deutz T4F 74HP CVT

https://truckmanualshub.com/

Electrical Schematic - Deutz T4F 74HP CVT

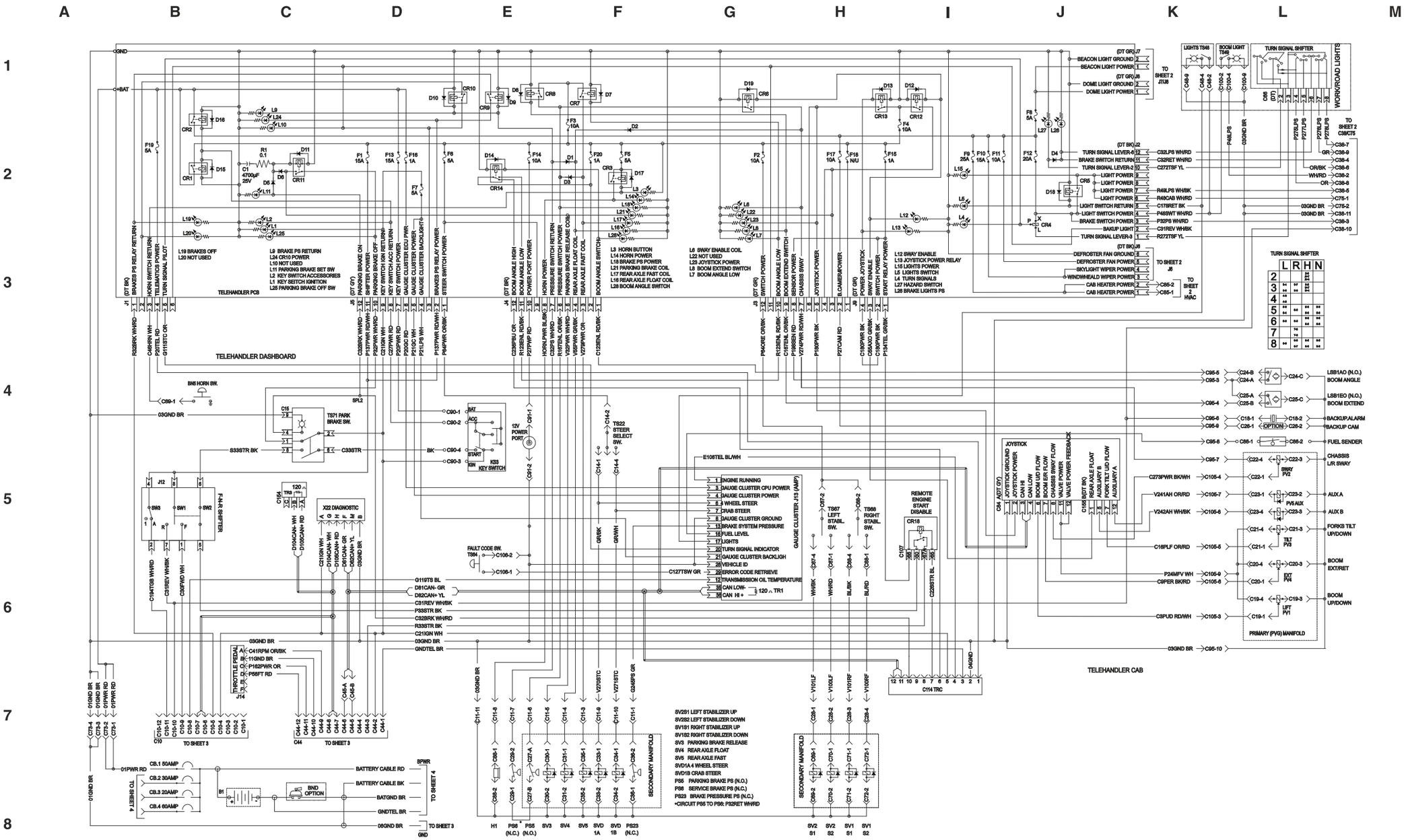

https://truckmanualshub.com/

Electrical Schematic - Deutz T4F 74HP CVT Transmission

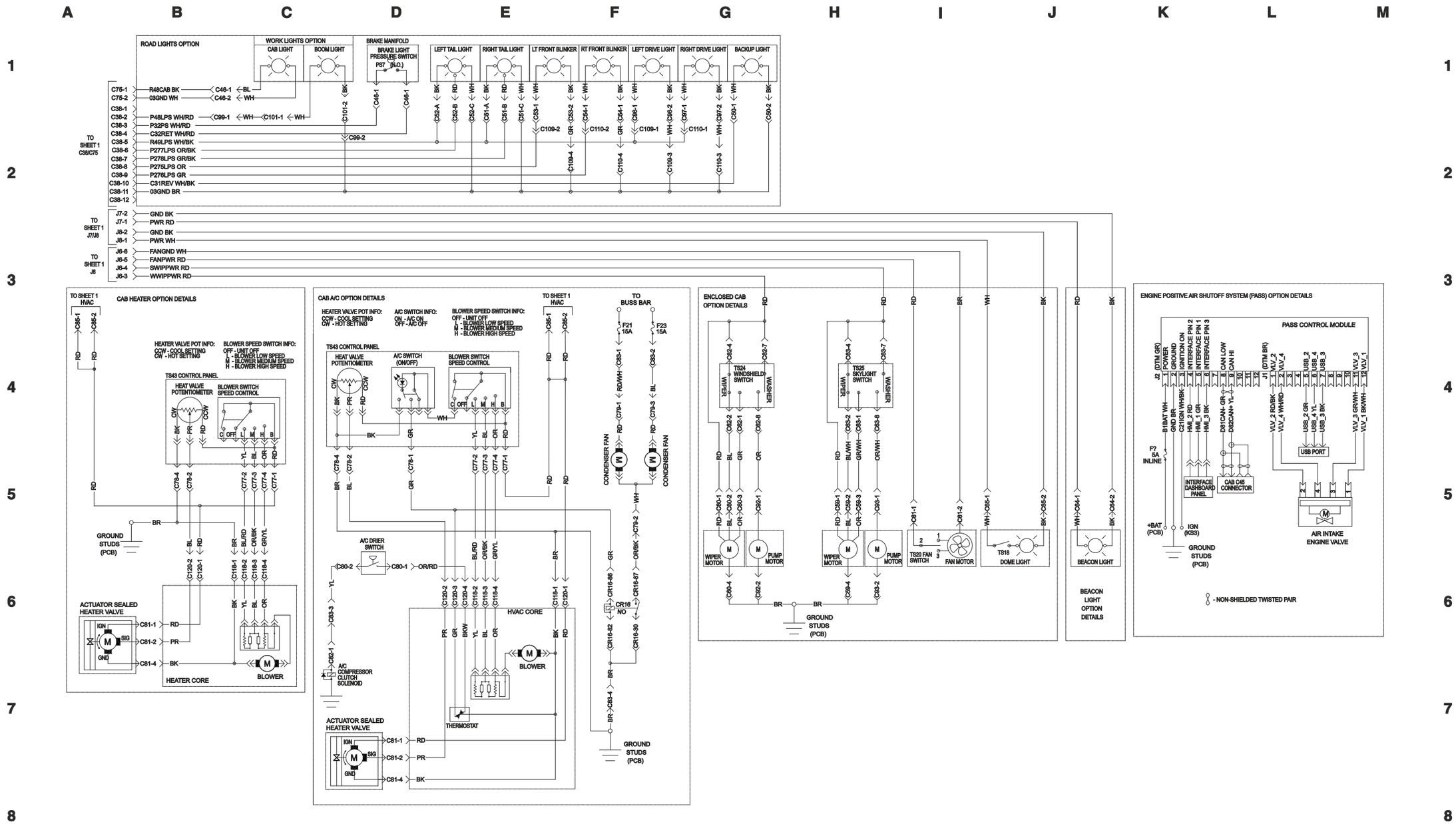

https://truckmanualshub.com/

Electrical Schematic - Deutz T4F 74HP CVT Transmission

https://truckmanualshub.com/

Electrical Schematic- Deutz T4F 74HP Engine Harness

https://truckmanualshub.com/

Electrical Schematic- Deutz T4F 74HP Engine Harness CVT

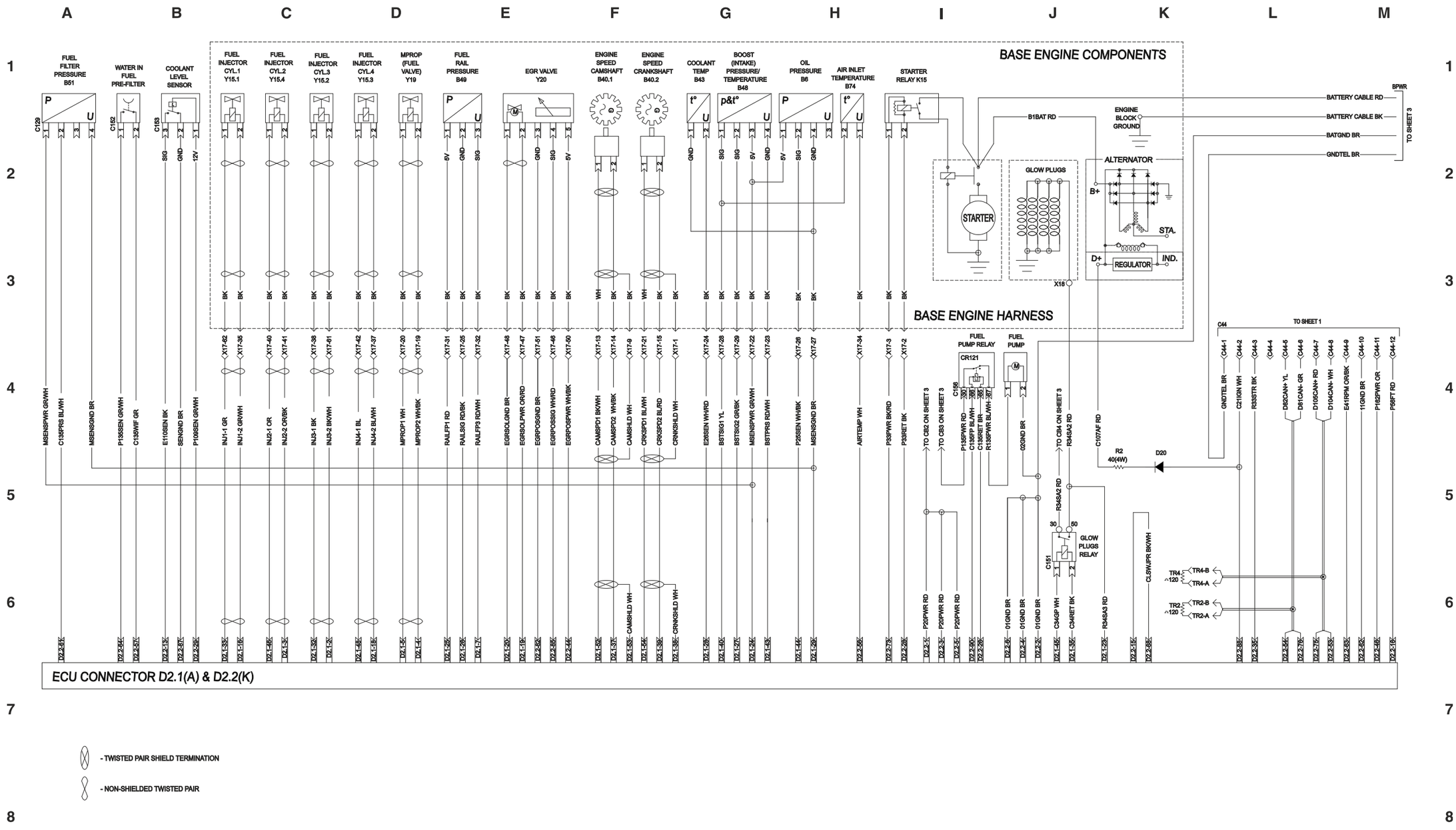

https://truckmanualshub.com/

Electrical Schematic- Deutz T4F 74HP Options CVT

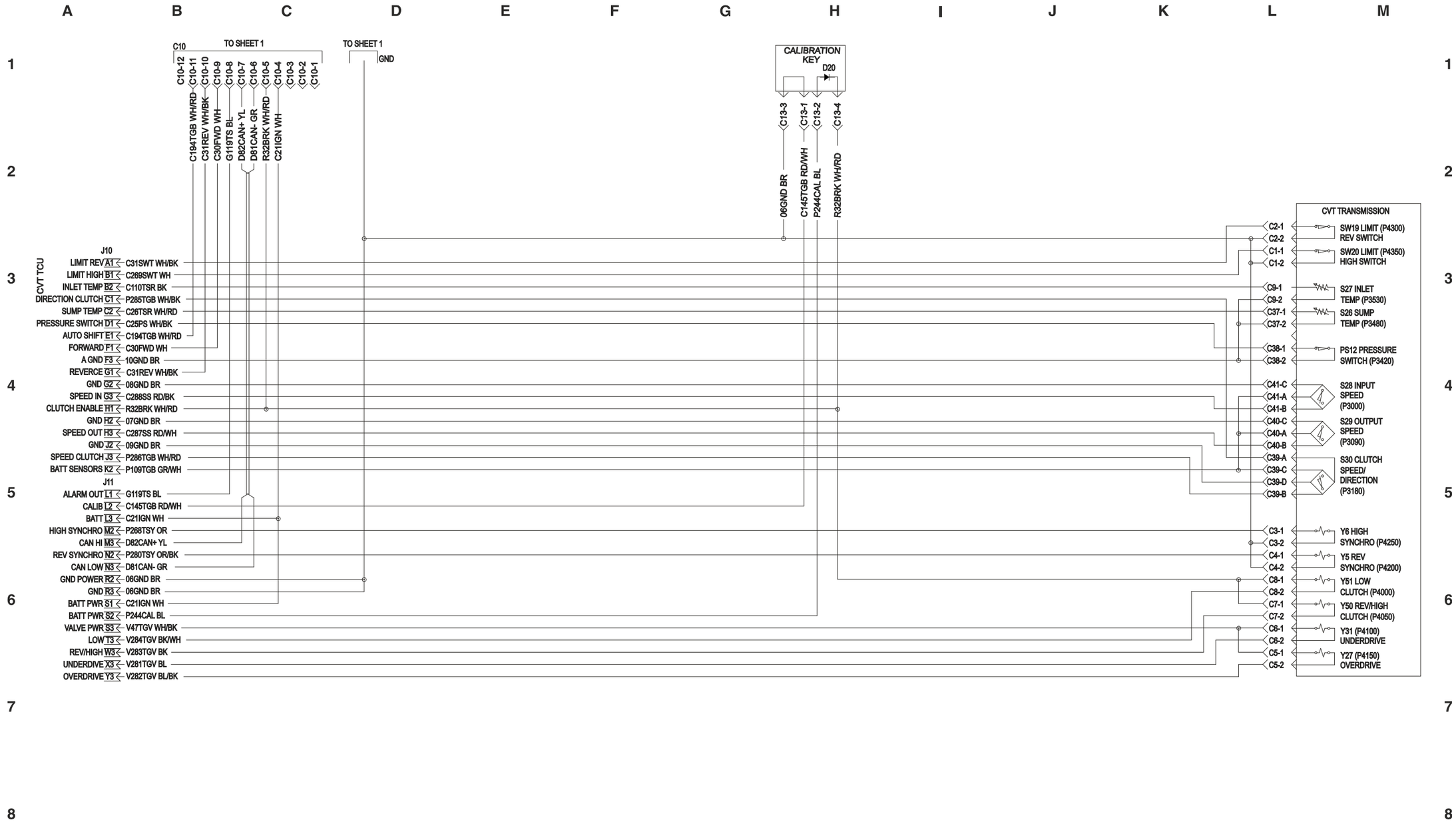

https://truckmanualshub.com/

Electrical Schematic- Deutz T4F 74HP Options

https://truckmanualshub.com/

Electrical Schematic - Deutz T4F 74HP DANA

https://truckmanualshub.com/

Electrical Schematic - Deutz T4F 74HP DANA

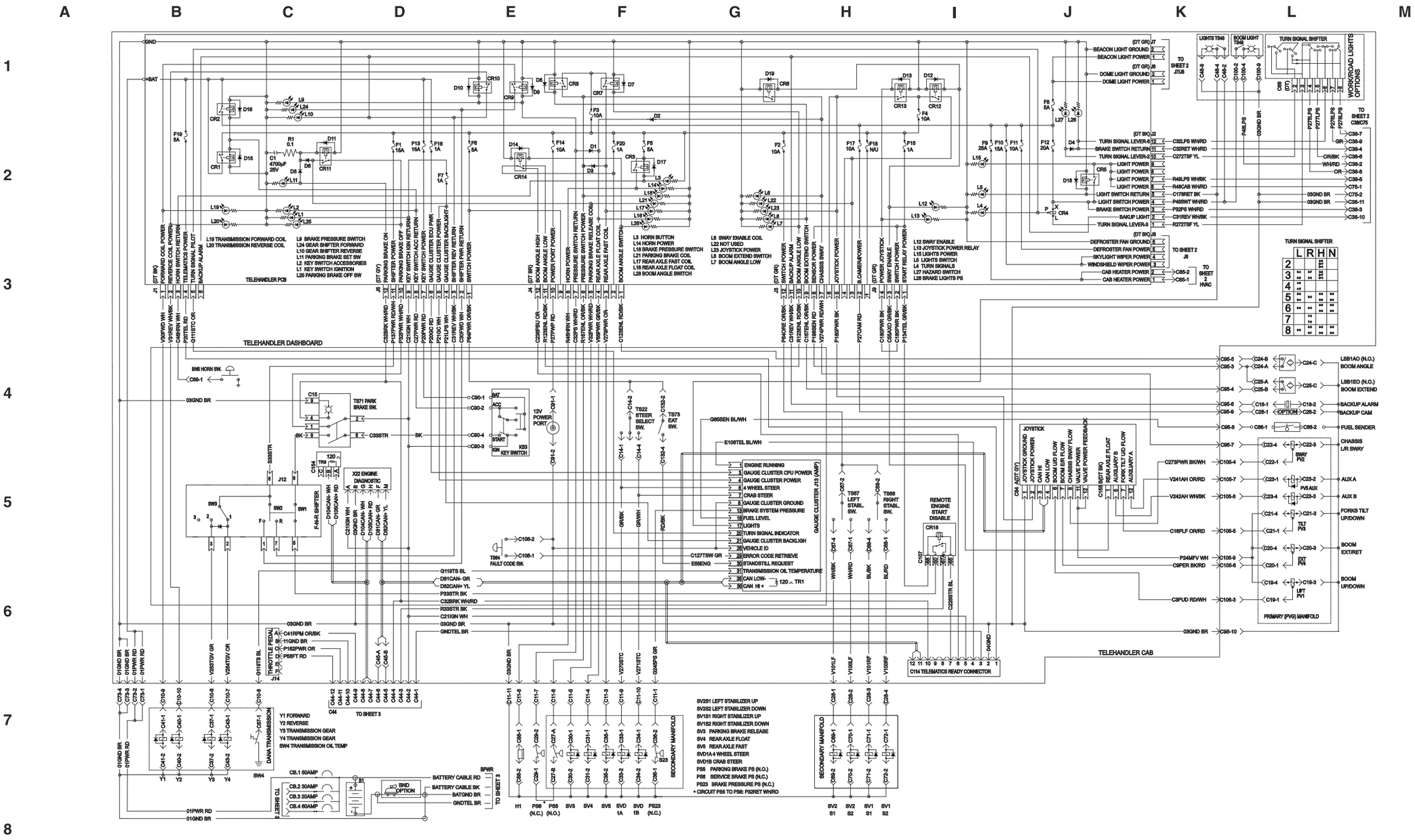

https://truckmanualshub.com/

Electrical Schematic- Deutz T4F 74HP DANA Engine Harness

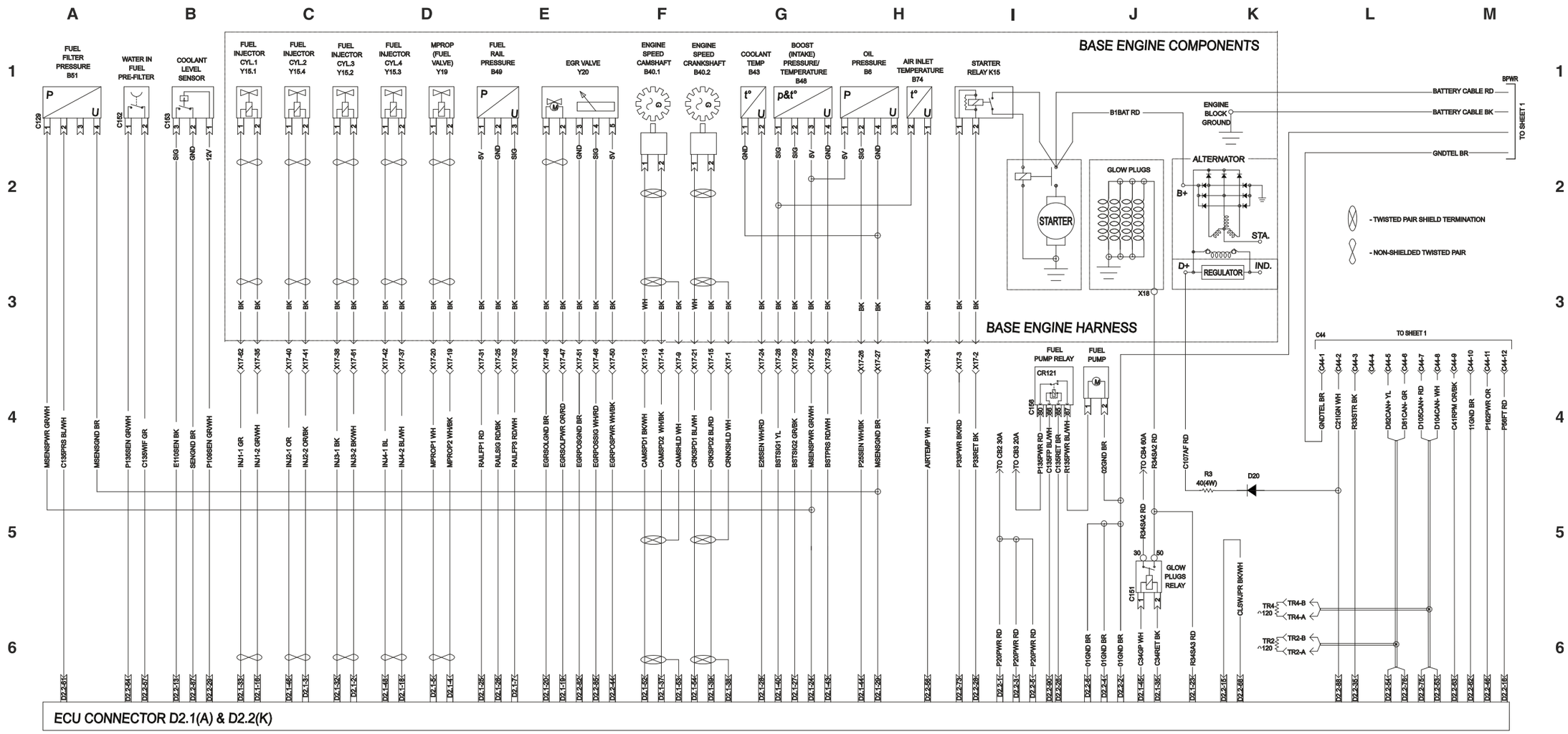

https://truckmanualshub.com/

Electrical Schematic- Deutz T4F 74HP DANA Engine Harness

https://truckmanualshub.com/

Electrical Schematic- Deutz T4F 74HP DANA Options

https://truckmanualshub.com/

Electrical Schematic- Deutz T4F 74HP DANA Options

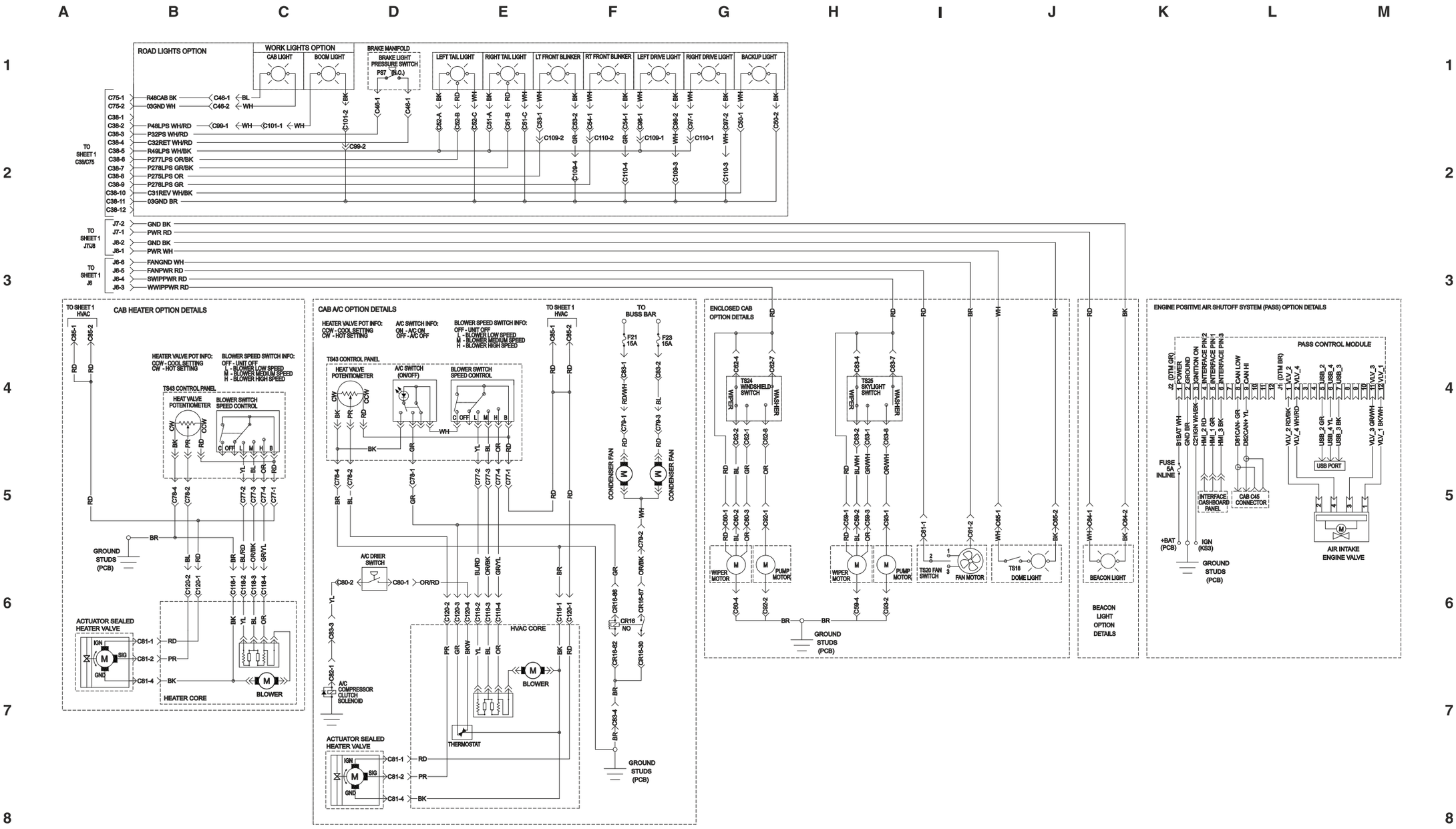

https://truckmanualshub.com/

Electrical Schematic - Deutz T3/T4F 120HP ZF

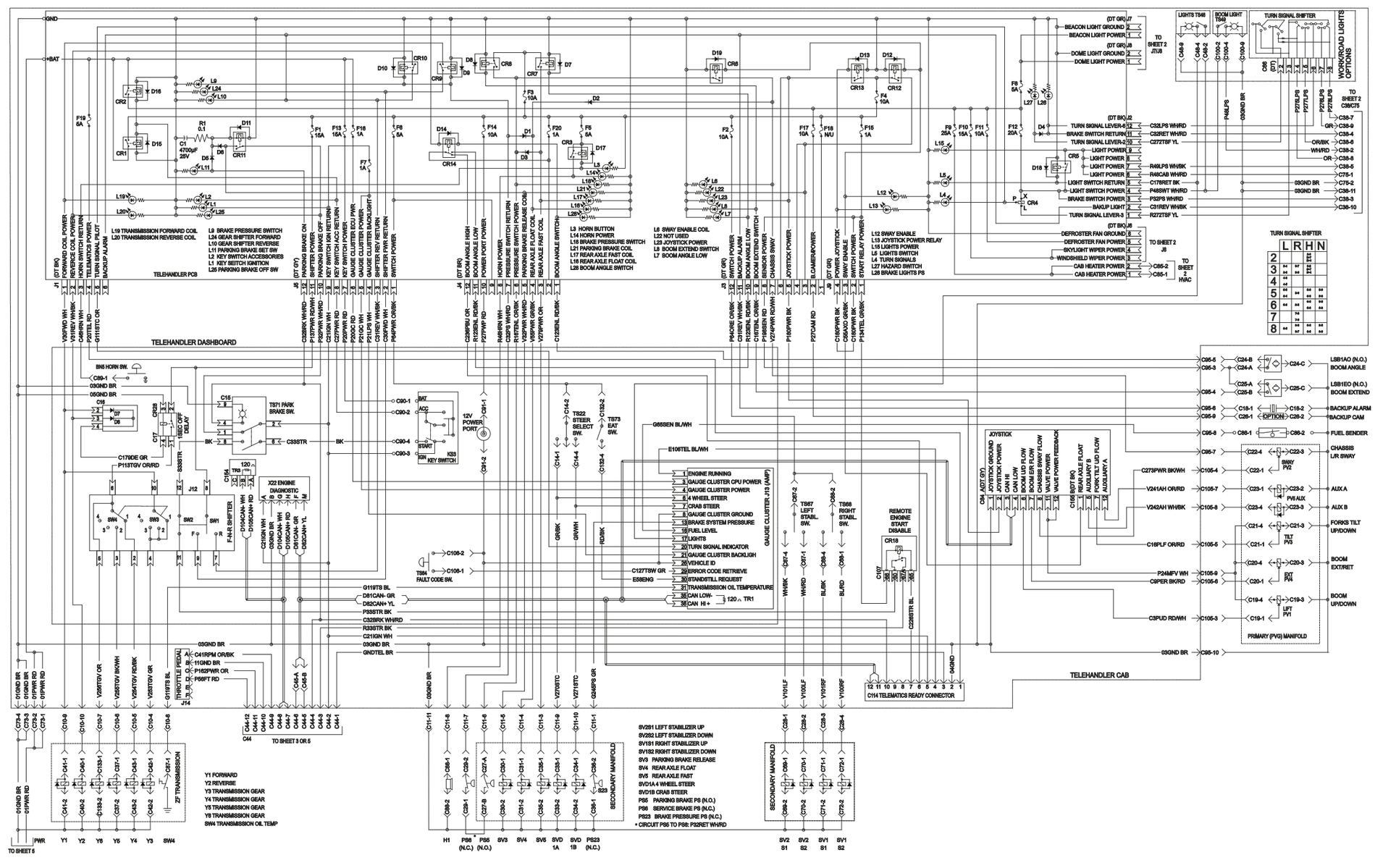

https://truckmanualshub.com/

Electrical Schematic - Deutz T3/T4F 120HP ZF

https://truckmanualshub.com/

Base Engine ECM Schematic - Deutz T4F 120HP ZF

https://truckmanualshub.com/

Base Engine ECM Schematic - Deutz T4F 120HP ZF

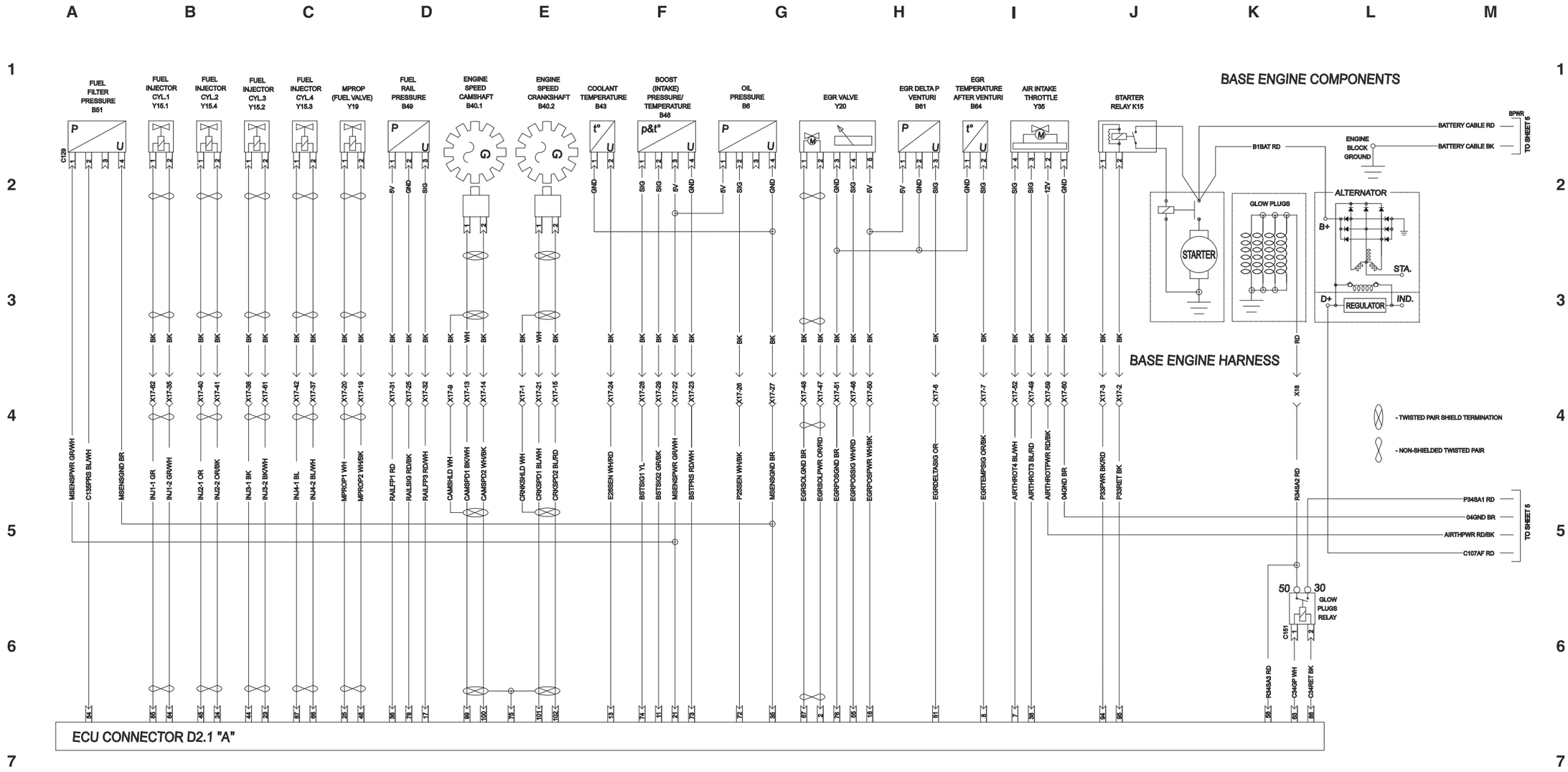

https://truckmanualshub.com/

Engine ECM Schematic - Deutz T3 120HP ZF

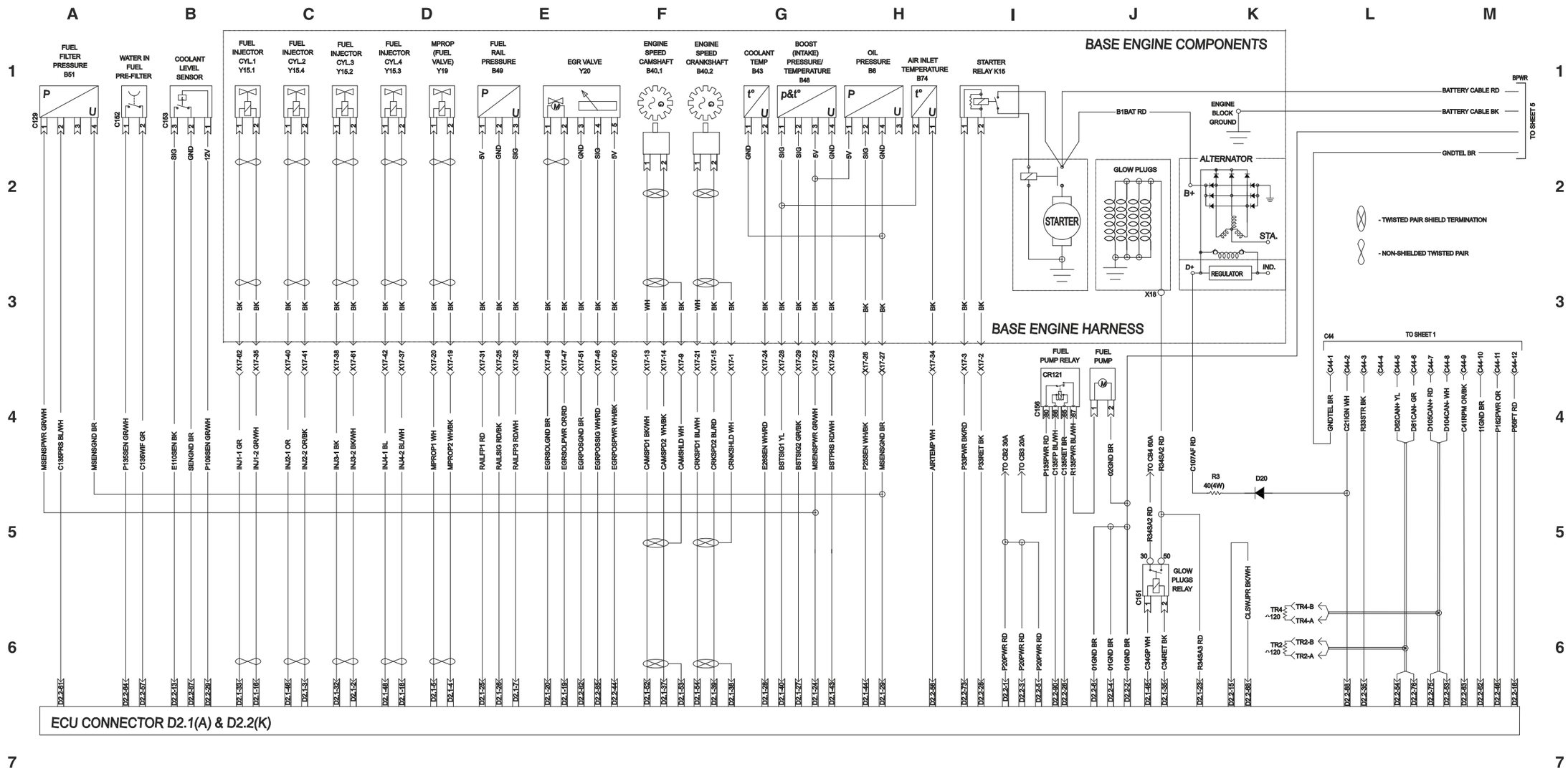

https://truckmanualshub.com/

Engine ECM Schematic - Deutz T3 120HP ZF

https://truckmanualshub.com/

EAT ECM Schematic - Deutz T4F 120HP ZF

https://truckmanualshub.com/

EAT ECM Schematic - Deutz T4F 120HP ZF

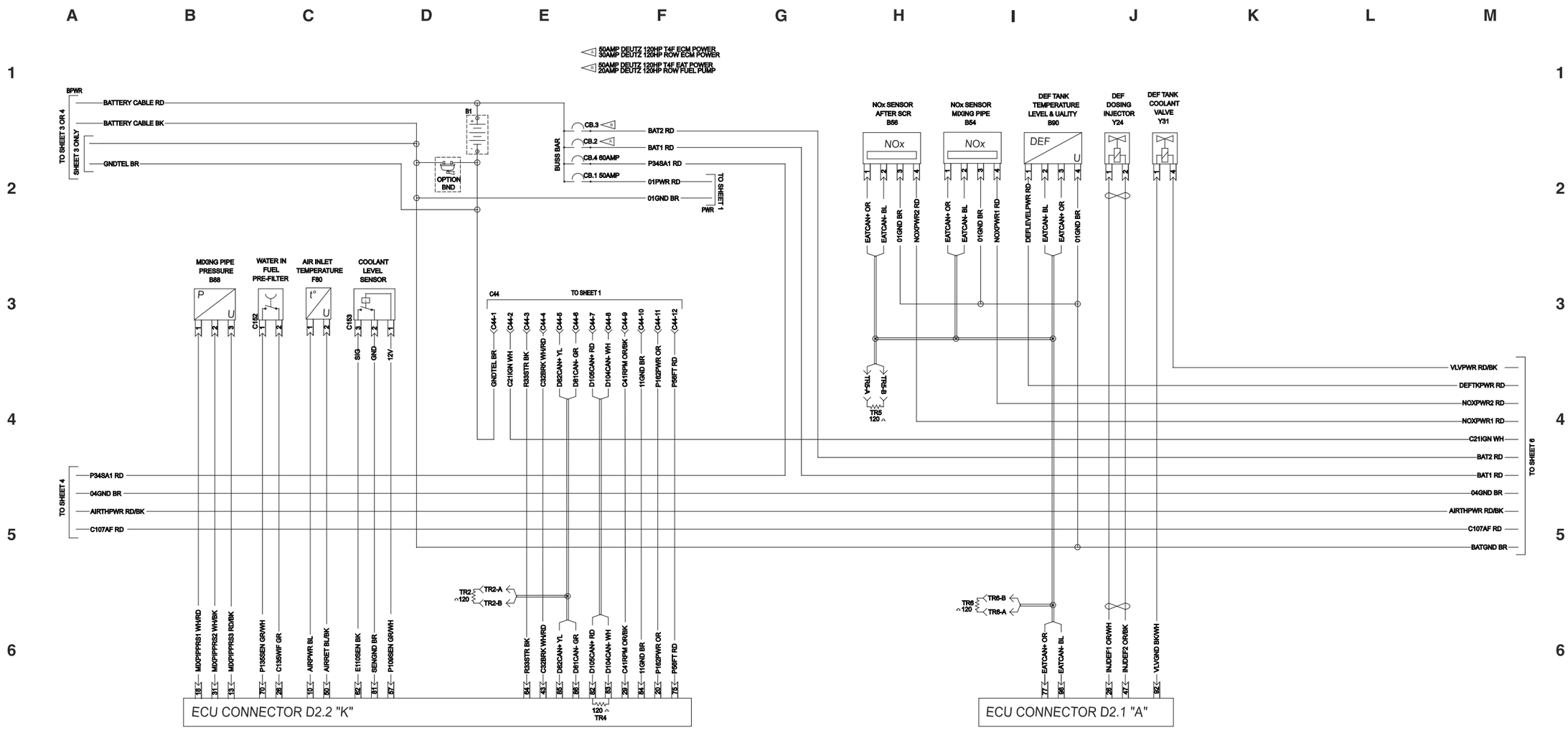

https://truckmanualshub.com/

EAT ECM VEC Schematic - Deutz T4F 120HP ZF

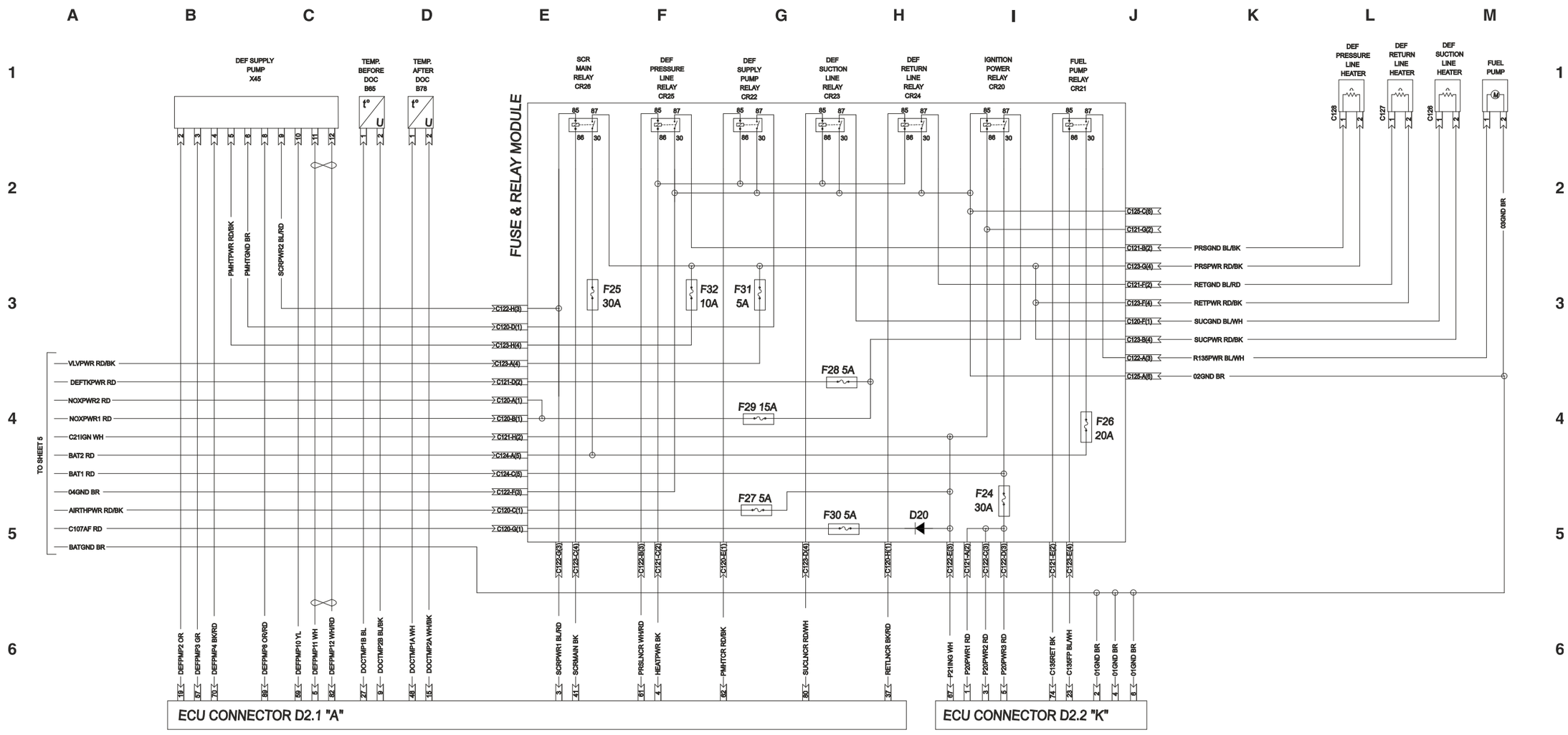

https://truckmanualshub.com/

EAT ECM VEC Schematic - Deutz T4F 120HP ZF

https://truckmanualshub.com/

Schematic - Deutz T3/T4F 120HP ZF Options

https://truckmanualshub.com/

Schematic - Deutz T3/T4F 120HP ZF Options

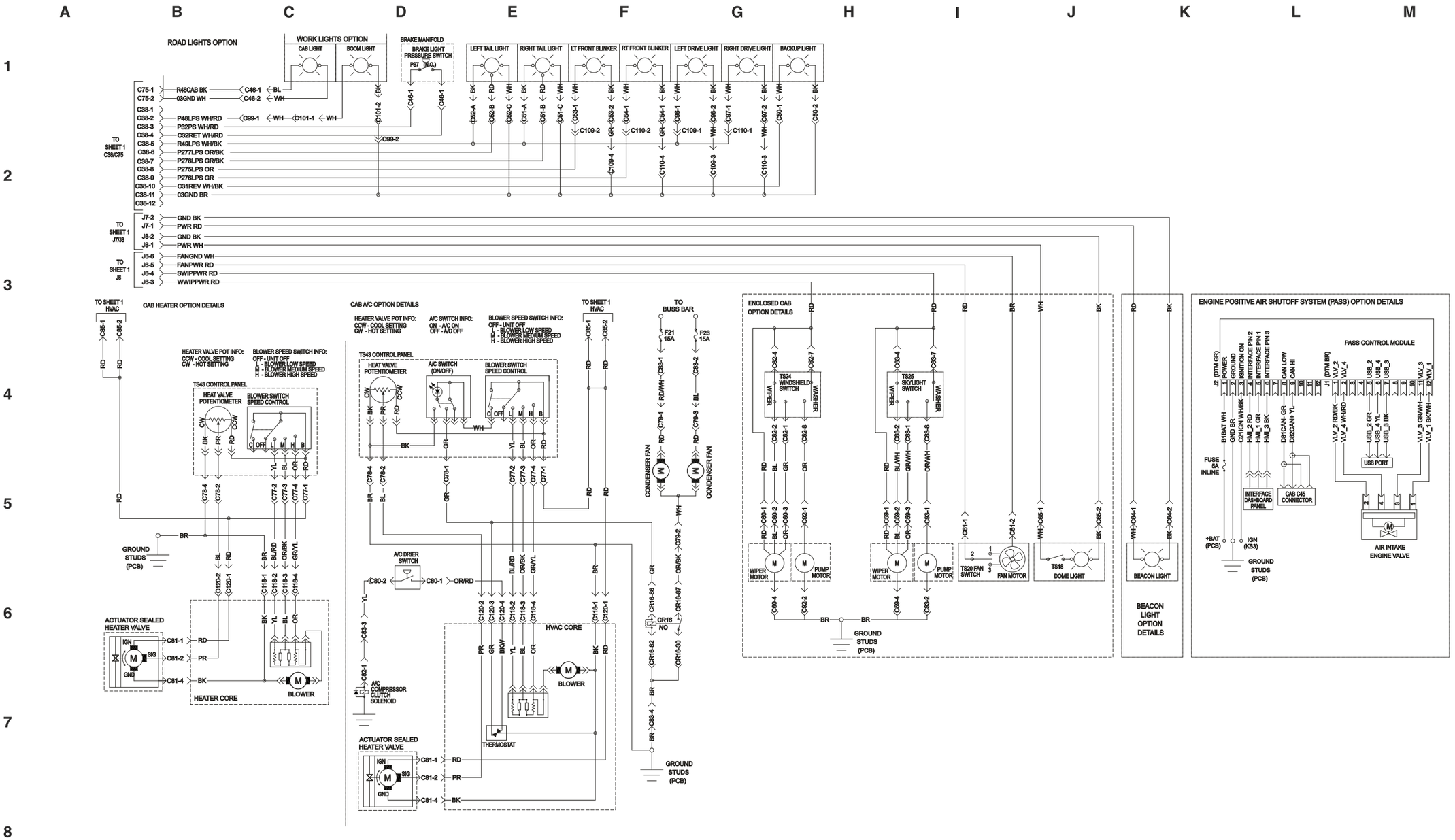

https://truckmanualshub.com/

Hydraulic Schematic

https://truckmanualshub.com/

Hydraulic Schematic

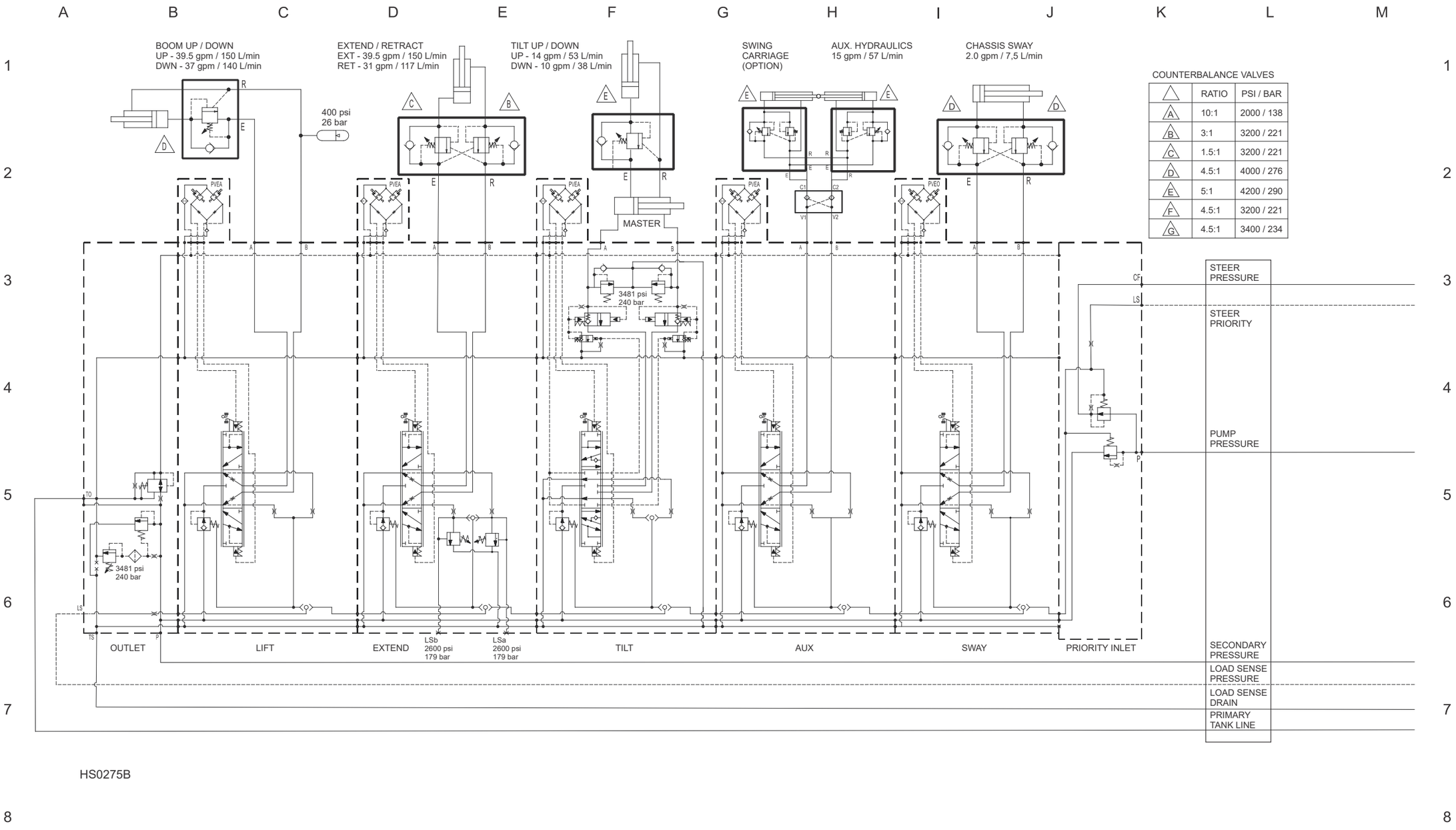

COUNTERBALANCE VALVES

	RATIO	PSI / BAR
A	10:1	2000 / 138
B	3:1	3200 / 221
C	1.5:1	3200 / 221
D	4.5:1	4000 / 276
E	5:1	4200 / 290
F	4.5:1	3200 / 221
G	4.5:1	3400 / 234

https://truckmanualshub.com/

Hydraulic Schematic

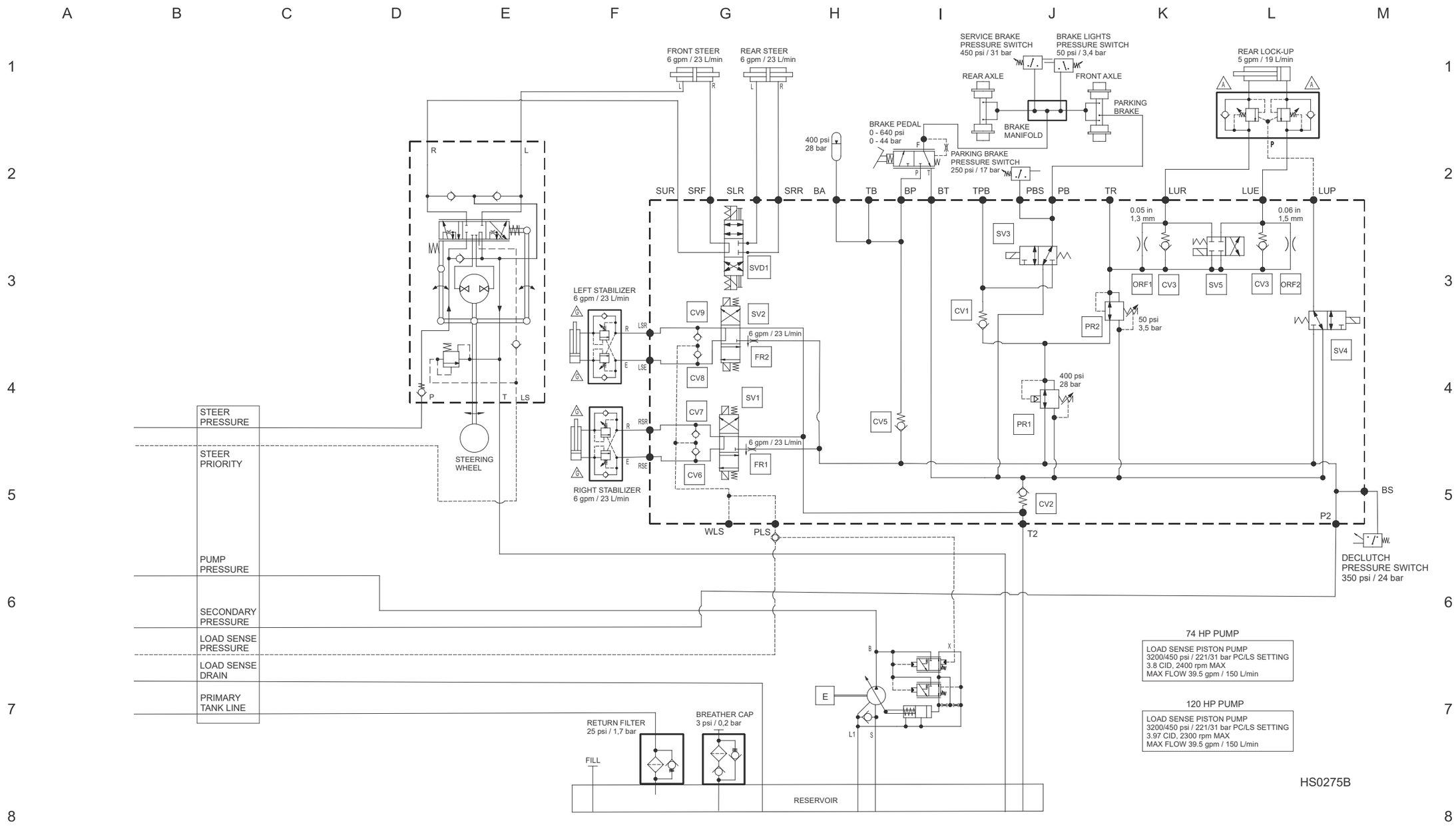

https://truckmanualshub.com/

Hydraulic Schematic

https://truckmanualshub.com/

California Proposition 65

WARNING

Operating, servicing and maintaining this equipment can expose you to chemicals including engine exhaust, carbon monoxide, phthalates, and lead, which are known to the State of California to cause cancer and birth defects or other reproductive harm. These chemicals can be emitted from or contained in other various parts and systems, fluids and some component wear by-products. To minimize exposure, avoid breathing exhaust, do not idle the engine except as necessary, service your equipment and vehicle in a well-ventilated area and wear gloves or wash your hands frequently when servicing your equipment or vehicle and after operation. For more information go to www.P65Warnings.ca.gov/passenger-vehicle.

Breathing diesel engine exhaust exposes you to chemicals known to the State of California to cause cancer and birth defects or other reproductive harm.

- Always start and operate the engine in a well-ventilated area.
- If in an enclosed area, vent the exhaust to the outside.
- Do not modify or tamper with the exhaust system.
- Do not idle the engine except as necessary.

For more information go to www.P65warnings.ca.gov/diesel.

www.genielift.com

Distributed By: