https://truckmanualshub.com/

Workshop Manual

Fortius Series Engines

8366 62500

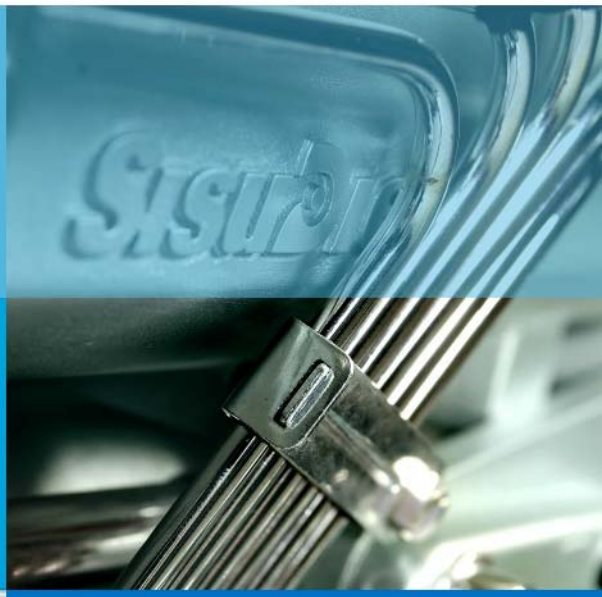

SisuDiesel

https://truckmanualshub.com/

SisuDiesel

Fortius Series

Engines

Workshop Manual

03 08

Sisu Diesel Inc.
FIN-37240 Linnavuori, Finland
Telephone: +358 3 341 7111
E-mail: info.sisudiesel@sisudiesel.com
www.sisudiesel.com

Diesel Engines, After Sales
Telefax: +358 3 341 7333

Sisu Diesel Inc. takes no responsibility for any damages caused
because of possible incorrect information in this manual

https://truckmanualshub.com/

CONTENTS

GENERAL 6
TO THE USER 6
SAFETY INSTRUCTIONS 7
ENGINE TYPE DESIGNATIONS 8
LOCATION OF THE ENGINE SERIAL NO. 8
MARKING OF THE EEM 2 CONTROL UNIT 9
LIFTING THE ENGINE 9
CONSTRUCTION 10
Technical data 10
General 11
Cylinder block 11
Flywheel housing 11
Cylinder head 12
Valve mechanism 12
Crank mechanism 12
Timing gears 13
Lubricating system 14
Cooling system 15
Inlet and exhaust system 16
TECHNICAL DATA 17
Cylinder block 17
Cylinder block, 84-engines 17
Cylinder liners 17
Cylinder head 17
Valves, rockers and tappets 18
Camshaft 19
Crankshaft 19
Crankshaft, 84-engines 20
Flywheel 21
Balancing unit, 44-engines 21
Timing gears 21
Timing gears, 84-engines 22
Connecting rod 22
Piston, rings and pin 23
Piston, rings and pin, 84-engines 23
Lubricating system 24
Oil pump, 33- and 44-engines 24
Oil pump, 66-, 74- and 84-engines 25
Coolant pump, 33- and 44-engines 25
Coolant pump, 66- and 74-engines 25
Coolant pump, 84-engines 25
Thermostat 26
Turbocharger 26
TIGHTENING TORQUES 27
SPECIAL TOOLS 28
Cylinder block 28
Timing gear- and flywheel housing 29
Cylinder head and valve mechanism 30
Crank mechanism 31
Coolant pump 32
Fuel system 33
WORK INSTRUCTIONS 34
1. CYLINDER BLOCK 34

A. Measuring cylinder liner wear . . . 34
B. Removing cylinder liner . . . 34
C. Checking cylinder block . . . 34
D. Changing camshaft bushing . . . 34
E. Fitting plug at camshaft rear end . . . 36
F. Oversize bushings for camshaft . . . 36
G. Fitting plug at camshaft rear end (oversize bushings) . . . 36
H. Fitting cylinder liner . . . 37
2. FLYWHEEL HOUSING . . . 40
A. Fitting flywheel housing . . . 40
B. Changing crankshaft rear oil seal . . . 40
3. CYLINDER HEAD . . . 42
A. Removing cylinder head . . . 42
B. Removing valves . . . 42
C. Checking cylinder head . . . 42
D. Changing valve guides . . . 43
E. Machining valve seat . . . 43
F. Changing valve seat rings . . . 44
G. Grinding valves . . . 44
H. Fitting valves . . . 44
I. Fitting cylinder head . . . 45
4. VALVE MECHANISM . . . 46
A. Reconditioning valve mechanism . . . 46
B. Changing camshaft / camshaft gear . . . 46
C. Adjusting valves . . . 47
5. CRANKSHAFT . . . 50
A. Removing crankshaft . . . 50
B. Checking crankshaft . . . 50
C. Changing crankshaft gears . . . 50
D. Fitting crankshaft . . . 51
E. Crankshaft hub piece . . . 52
F. Checking element of the rubber damper . . . 52
G. Viscose type vibration damper . . . 52
H. Changing crankshaft pulley / vibration damper . . . 53
6. CONNECTING RODS AND PISTONS . . . 54
A. Removing pistons together with connecting rods . . . 54
B. Changing connecting rod bearings . . . 54
C. Checking connecting rod . . . 54
D. Changing piston rings . . . 55
E. Checking pistons . . . 56
F. Fitting piston pin . . . 56
G. Fitting piston together with connecting rod. . . . 56
7. COUNTERBALANCE (44-engines) . . . 58
A. Removing and disassembling counterbalance unit . . . 58
B. Reconditioning counterbalance unit . . . 58
C. Fitting counterbalance unit . . . 58
D. Changing crankshaft gear rim . . . 59
8. FLYWHEEL . . . 60
A. Changing starter ring gear on flywheel . . . 60
B. Fitting flywheel . . . 60
9. TIMING GEAR ASSEMBLY . . . 62
A. Removing timing gear casing . . . 62
B. Reconditioning idler gear . . . 62

C. Fitting timing gear casing . . . 63
D. Idler gear with bevelled ball bearings . . . 64
E. Power take-off . . . 65
9. TIMING GEAR ASSEMBLY . . . 66
A. Removing timing gear casing . . . 66
B. Fitting timing gear casing . . . 66
C. Fan drive device . . . 68
10. LUBRICATION SYSTEM . . . 70
A. Oil pressure regulating valve . . . 70
B. Removing and dismantling lubricating oil pump . . . 70
C. Assembling and fitting lubricating oil pump . . . 70
D. Piston cooling nozzles . . . 71
E. Fitting oil sump gasket . . . 71
F. Lubricating oil cooler . . . 71
G. Lubricating oil quality requirements . . . 73
H. Oil capacities . . . 73
11. COOLING SYSTEM . . . 74
A. Quality requirements of coolant . . . 74
B. Thermostat . . . 74
C. Reconditioning coolant pump . . . 75
D. Coolant pumps with heavy duty bearings . . . 77
E. Reconditioning the coolant pump . . . 77
12. INLET AND EXHAUST SYSTEM . . . 78
A. Checking air cleaner . . . 78
B. Checking inlet and exhaust pipes . . . 78
C. Checking turbocharger . . . 78
D. Fitting turbocharger . . . 79
13. FUEL SYSTEM . . . 80
Injectors . . . 80
A. Removing injectors . . . 81
B. Inspecting injectors . . . 81
C. Reconditioning injectors . . . 82
D. Fitting injector in engine . . . 82
E. Fitting delivery pipes . . . 83
Bosch VE rotary pump . . . 84
Technical data . . . 84
Fuel system, description . . . 85
A. Bleeding the fuel system . . . 86
B. Measuring the fuel feed pressure . . . 86
C. Removing the fuel injection pump . . . 86
D. Fitting the fuel injection pump . . . 86
Bosch VP 30 and VP 44 rotary pump . . . 88
Technical data . . . 88
Fuel system, description . . . 89
A. Bleeding fuel system . . . 90
B. Measuring fuel feed pressure . . . 90
C. Removing fuel injection pump . . . 90
D. Fitting fuel injection pump . . . 91
E. Fuel quality requirements . . . 93
14. ENGINE CONTROL SYSTEM EEM 2 . . . 94
Construction of the EEM 2 . . . 94
EEM 2 Engine Control System, description . . . 95
Service tool of EEM 2 system . . . 95
A. Changing of Control Unit (ECU) . . . 96

https://truckmanualshub.com/

B. Sensors of Engine Control System 97
15. ELECTRICAL SYSTEM 98
A. Alternators 98
B. Starters 101
16. OPTIONAL EQUIPMENT 102
A. Compressor (Bendix) 102
B. Compressor (Knorr) 103

https://truckmanualshub.com/

GENERAL

TO THE USER

This Workshop Manual is intended to facilitate workshop operations and repair work.

Fortius series engines (types 33, 44, 66, 74 and 84) are mainly the same in construction, so the same repair instructions usually apply to different engine types. The differences between the various engine types which affect repair work have been mentioned in technical data and repair instructions. All measurements are in millimetres and valid when the temperature of the parts is +20°C, unless otherwise stated.

Before starting the repair work read the safety instructions in the beginning of this book. Make sure that you have all necessary tools, parts and accessories at your disposal. The special tools mentioned in the work instructions are not all essential, but they speed up and facilitate the work and contribute to successful execution of work. An engine which has undergone repairs must be run in just like a new one.

Should the engine require measures not described in this manual, please consult your local agent or the Service Department of Sisu Diesel Inc., Linnavuori, Finland. To facilitate consulting, find out the following facts about the engine before contacting us:

- engine type
- engine number
- application or equipment
- hours operated or kilometres driven.

In this Workshop Manual the regular service procedure is not handled as this is explained in the Fortius series Instruction Manual.

As Sisu Diesel Inc. is continuously developing the products, all rights are reserved without separate notice to change the adjustments, accessories and service- and repair procedure.

https://truckmanualshub.com/

SAFETY INSTRUCTIONS

In the use and service of the engine there is always the possibility of injury. Before starting the service read and understand the following safety instructions and remarks!

- Do not start a repair work that you do not fully handle.
- Make sure that the place of the repair and the surrounding gives the possibility for safe working.
- Always be sure of the cleanness and the good order of the repairing place.
- Do not use faulty or otherwise useless tools.
- Remove all finger rings, chains and watch before starting work.
- Use up-todate protection equipment when you work. For example eye protection as working with compressed air for cleaning, grinding, hammering or other work.
- Use lifting device for lifting and transporting heavy (over 20 kg) pieces. make sure of good condition of lifting hooks and chains. The lifting ears on the engine must not be applied by side forces when lifting.
- Never work under an engine that is left handling under a lifting device or lifted up by a jack. Always use strong supports before starting the work.
- Use only genuine **SisuDiesel** spare parts.
- Start the engine only by using the starting switch in the cabin.
- Do not start an engine if the protection covers are removed. **Note!** The fan is difficult to see as the engine is running! Make sure that wide clothes or long hear is not caught in the rotating parts of the engine.
- If you start the engine indoors, be sure you have proper ventilation.
- Never use aerosol type of starting aid! (Risk for explosion.)
- When you are operating the engine or working near it, use hearing protectors to avoid noise injuries.
- Stop the engine always before service- or repair work.
- Avoid touching the exhaust manifold, turbocharger and the other hot parts of the engine.
- Open the radiator cap with care when the engine is hot as the cooling system is pressurised. The cooling liquid and lubrication oil of a hot engine causes injuries when touching the skin.
- Open fire, smoking and sparks should not be allowed near the fuel system and batteries. (Specially when loading batteries, explosive.)
- Always disconnect the minus (-) wire of the battery when doing service or repair of the electric system.
- At temperatures on excess of 300°C, e.g. if the engine is burnt by a fire, the viton seals of the engine (e.g. the undermost o-ring of the cylinder liner) produce very highly corrosive hydrofluoric acid. Do not touch with bare hands, viton seals subjected to abnormally high temperatures. Always use neoprene rubber or heavy duty gloves and safety glasses when decontaminating. Wash the seals and the contaminated area with a 10% calcium hydroxide or other alkali solution. Put all removed material in sealed plastic bags and deliver them to the point stated by the Authorities concerned. **Note!** Never destroy viton-seals by burning!
- When checking fuel injectors do not let the jet of high pressure fuel contact your skin. The fuel penetrates the skin causing severe injuries. Contact your doctor immediately!
- The fuel, lubricating oil and coolant cause irritation in skin contact for long time.

- Avoid unnecessary idling of the engine.
- Do not let oil and other liquids drop into the soil when servicing the engine.
- All the gaskets of the engine are of non-asbestos material.
- Be careful when washing the engine with a high pressure washing machine. Do not use high pressure to wash e.g. the electric and fuel equipment or the radiator because they can easily be damaged.

https://truckmanualshub.com/

ENGINE TYPE DESIGNATIONS

74 E T A

Equipped with intercooler
- A = air-to-air
- I = air-to-water

Turbocharged engine
- W = by-pass turbo
- T = standard turbo

Basic type
- 74 = cylinder displacement, decilitres
- E = electronic engine management
- D = mechanical injection pump

LOCATION OF THE ENGINE SERIAL NO.

The engine serial number is always stamped on the cylinder block as the picture shows.

The serial number is also markes on the type plate.

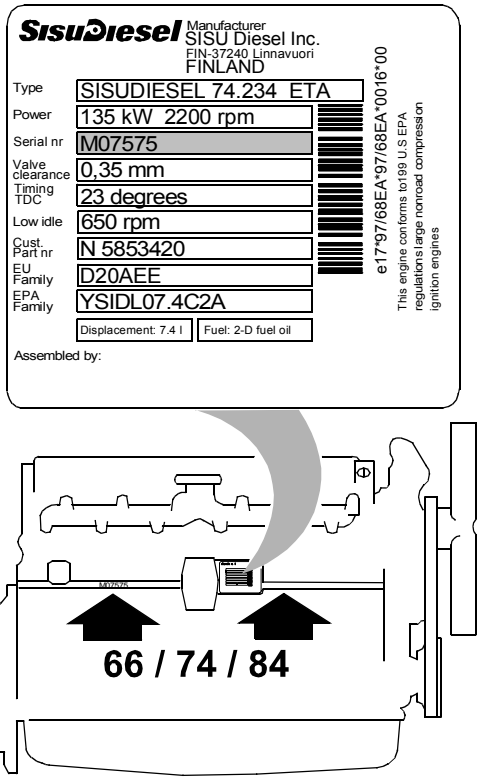

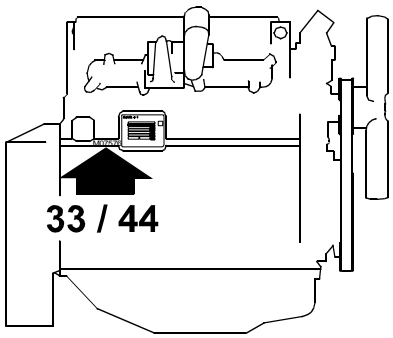

https://truckmanualshub.com/

MARKING OF THE EEM 2 CONTROL UNIT

The specification of the application is indicated on the type plate of the EEM 2 control unit. This specification must always be stated when ordering a control unit or asking for adjusting settings.

Note! The engine meets EU97/68/EC Stage 2 and EPA 40 CFR 89 Tier 2 emission requirements.

Do not fit any components on the engine other than those originally suited for it. The use of other than original SisuDiesel spare parts invalidates the responsibility of Sisu Diesel Inc. on the fulfilment of the emission requirements.

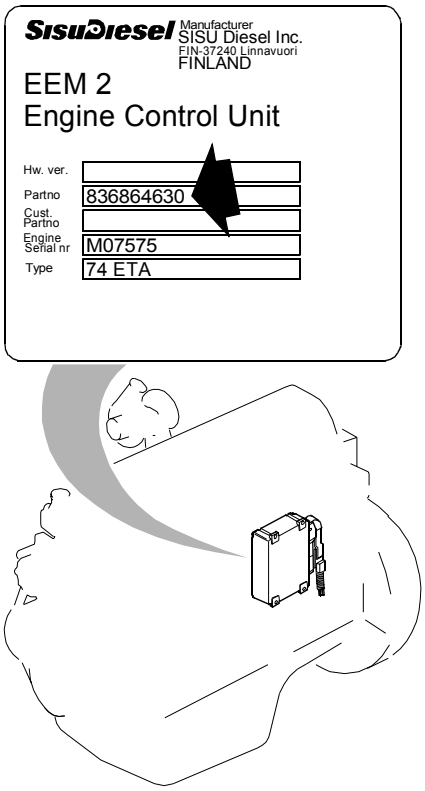

LIFTING THE ENGINE

Safe lifting of the engine is done with a lifting device where the lifting force effects the lifting ears vertically.

Weight of engine

Engine type	Weight kg *)
33	280
44	340
66	510
74	520
84	660

*) Dry weight without flywheel and electrics

A = Engine lifting ears

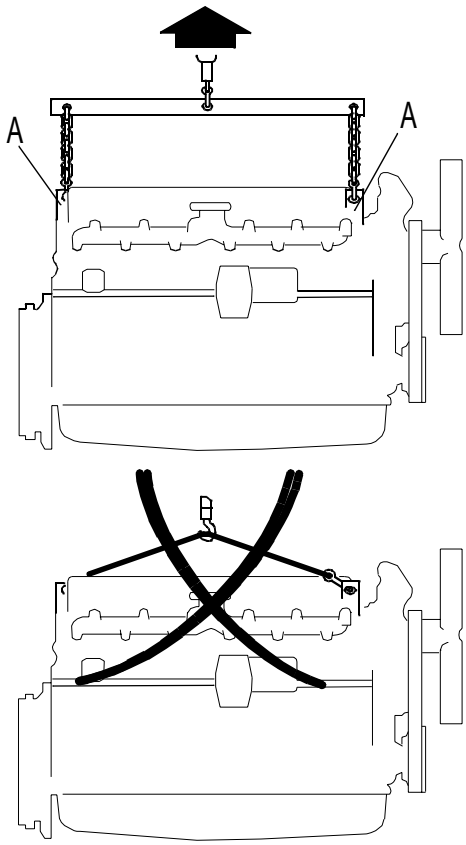

https://truckmanualshub.com/

CONSTRUCTION

Technical data

Engine type	33	44	66	74	84
Principal dimensions and data					
Number of cylinders	3	4	6	6	6
Displacement (ltr)	3,3	4,4	6,6	7,4	8,4
Cylinder bore (mm)	108	108	108	108	111
Stroke (mm)	120	120	120	134	145
Combustion	Direct injection				
Injection timing (installation mark)	Marked on the crankshaft pulley/damper				
Valve clearance, intake and exhaust (mm)	0,35 (cold or hot)				
Direction of rotation from the engine front	Clockwise				
Fuel system					
Injection pump					
Stanadyne DB4	■	■			
Bosch VP 30		■	■	■	
Bosch VP 44				■	■
Bosch P 7100					■
Fuel	The fuel must be according to norm EN 590, see page 93				
Injection order	1-2-3	1-2-4-3	1-5-3-6-2-4		
Feed pressure at idle speed	1,0...1,2 bar				
Injector	Five-hole nozzle				
Opening pressure of the nozzle	270 bar				
Adjusting pressure of the nozzle	278 bar				
Fuel filters					
Pre-filter	Stanadyne 30 µ				
Final filter	Stanadyne 5 µ				
Lubrication system					
Oil pressure in hot engine at running speed	2,5...5,0 bar				
Oil pressure at idle speed, min	1,0 bar				
Oil capacity	see page 73				
Oil quality requirements	see page 73				
Cooling system					
Number of thermostats	1	1	1/2	2	2
Opening temperature	∅ 54 mm = 79°C ∅ 67 mm = 83°C				
Coolant quality requirements	see page 74				

https://truckmanualshub.com/

General

The Fortius engine series consists of water-cooled in-line diesel engines with three, four and six cylinders. The turbocharged engines are equipped with wet, changeable cylinder liners.

The all engine types have a rigid and ribbed cylinder block. The crank mechanism is designed for supercharging. The cylinder liners are wet and supported at the middle. The cylinder head bolts are high tensile bolts.

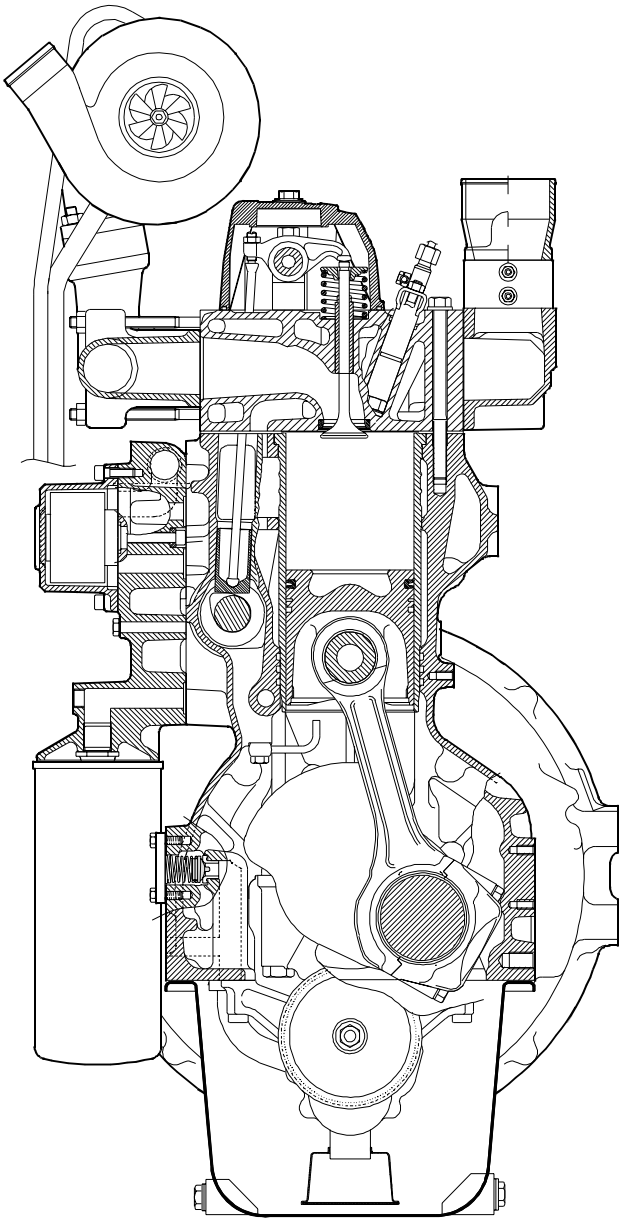

Cylinder block

The cylinder block is the main body of the engine, to which other engine parts are attached. Wet and replaceable cylinder liners are supported at the middle which reduces vibrations and directs coolant circulation mainly to the upper part of the liners.

The seal between the cylinder liner lower part and the cylinder block is achieved by three o-rings, which are fitted in grooves in the liner. The upper part is sealed by the cylinder head gasket.

The camshaft is located in the cylinder block. The camshaft front bearing location is fitted with a separate bearing sleeve. The remaining bearing locations are machined directly in the cylinder block. The 66-, 74- and 84-engines have separate bearing sleeves in all camshaft bearing locations. The drilling for the camshaft rear end is covered with a plug.

There are spaces on both sides of the rear main bearing for guide bearing shims (the crankshaft thrust bearings).

Flywheel housing

The flywheel housing is fitted at the rear end of the cylinder block. The seal for the crankshaft rear end is placed in a bore in the housing. The starter motor fixing point is fitted in the flywheel housing.

The lower face of the flywheel housing functions as a sealing surface for the oil sump gasket. This means that the lower face of the cylinder block must be level with the flywheel housing. When fitting the flywheel housing, its position is determined by tension pins.

The flywheel housing are delivered according to the requirements set, by the engine application and different flywheel housings can be mounted on all engine types.

https://truckmanualshub.com/

Cylinder head

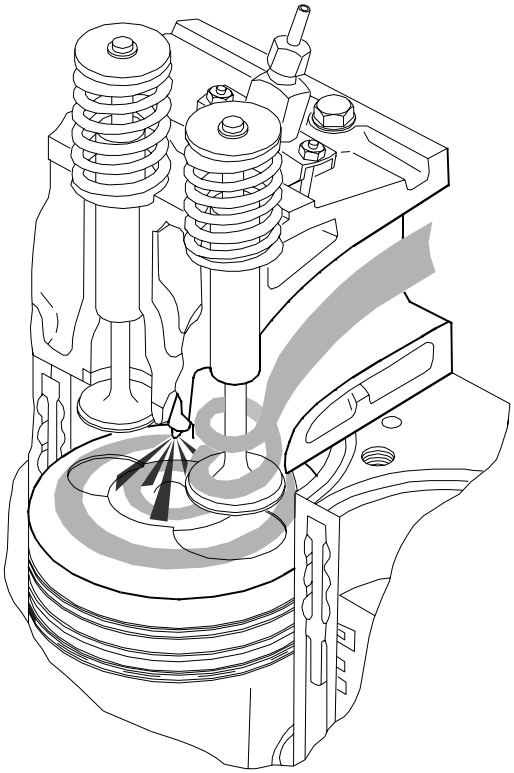

33- and 44-engines have one cylinder head. 66-, 74- and 84-engines have two cylinder heads which are exchangeable with each other and also with the cylinder head on the 33-engine. Each cylinder has its own inlet and exhaust ports located on either side of the head. Between hot exhaust valves a cool inlet valve is fitted to balance the thermal load.

Cylinder head bolts are high tensile bolts which are tightened up to yield limit using angle tightening principle. Due to the large stretch the tightening forces are kept constant during the whole lifetime and retightening is unnecessary.

The injector locations are machined directly into the cylinder head. The inlet and exhaust valve guides are identical and can be interchanged. Exhaust valves are fitted with separate valve seat rings. Also the engines with high output are equipped with separate inlet valve seats.

Valve mechanism

The valve mechanism is operated by the camshaft which is located in the cylinder block. The drive is transferred with the help of tappets and push rods. The camshaft gear wheel is fitted with a press fit and fixed with a key. Each bearing is lubricated by the force feed lubrication system through drilled oilways in the cylinder block.

Crank mechanism

The crankshaft is forged from chrome alloy special steel and is induction hardened at the bearing and sealing surfaces. This makes it possible to grind bearings four times without a new heat treatment. Gear wheels are located at the front end of the crankshaft. They are a press fit, and drive the idler wheel and oil pump. In addition, the front end of the crankshaft has splines for the hub of the V-belt pulley. An oil deflector ring is fitted between the hub and gear wheel, and a dust shield is fitted on the hub in order to protect the seal.

The crankshaft is supported on the cylinder block by main bearings which are placed on both sides of each cylinder. Thus there is one main bearing more than cylinders. The crankshaft thrust washers are placed in both sides of the rearmost main bearing.

At the rear end of the crankshaft there is fitted a flywheel on which is a press-fit a starter ring gear. The forged connecting rod has an I-section cross-section. The bearing location at the bottom end of the connecting rod is fracture-split, and the bearing cup is secured by two special elongated screws. The upper part has a wedge-shaped bearing location, in which the piston pin bearing bushing is fitted with a press fit.

The piston is made of an eutectic aluminium alloy. In the upper face of the piston there is a combustion chamber. The shape of the chamber is intended to maximise the mixture of air and fuel. The upper ring location is formed in a cast iron ring which is cast in the piston. In addition, the piston is graphite coated to ensure correct running-in.

The piston has three rings. The upper molybdenum-coated ring has a wedge-shaped cross-section. On some slight supercharged engines the upper ring is right-angled. The middle ring is tapered and it fits into its groove. The taper taking up the clearance. The oil control ring is spring loaded and it has a two-stage, chromed scraping edge.

Some four-cylinder engines (44) are equipped with a balancer unit. The eccentric weights, which rotate at twice the engine speed, even out the vibration forces exerted by the movement of the pistons and the crank mechanism.

https://truckmanualshub.com/

Timing gears

33-, 44-, 66- and 74-engines

The timing gear train consists of hardened, helically cut gear wheels. The gears are encased by the timing gear casing which is fitted to the front of the engine. The timing gear drives the camshaft, fuel injection pump and oil pump.

If the engine is equipped with a hydraulic pump, it is driven via a gear or a separate drive unit.

The idler gear is supported with a bearing sleeve / ball bearing (66- and 74-engines) on the shaft on the front face of the cylinder block. Two different dimensions of gear and shaft is used.

84-engines

There are two main types of a timing gear assemblies, so-called narrow (A) and broad (B) timing gear casing.

The timing gear train consists of hardened, helically cut gear wheels. The gears are encased by the timing gear casing which is fitted to the front of the engine. The timing gear drives the camshaft, fuel injection pump, oil pump and coolant pump.

If the engine is equipped with the broad timing gear casing, there is a separate drive unit for a hydraulic pump or a compressor. The drive unit is driven via a small idler gear.

The idler gear is supported with a bevelled ball bearing on the shaft on the front face of the cylinder block.

Timing gears

1. Camshaft gear
2. Idler gear
3. Injection pump gear
4. Coolant pump gear
5. Crankshaft gears
6. Oil pump gear
7. Small idler gear
8. P.T.O. gear

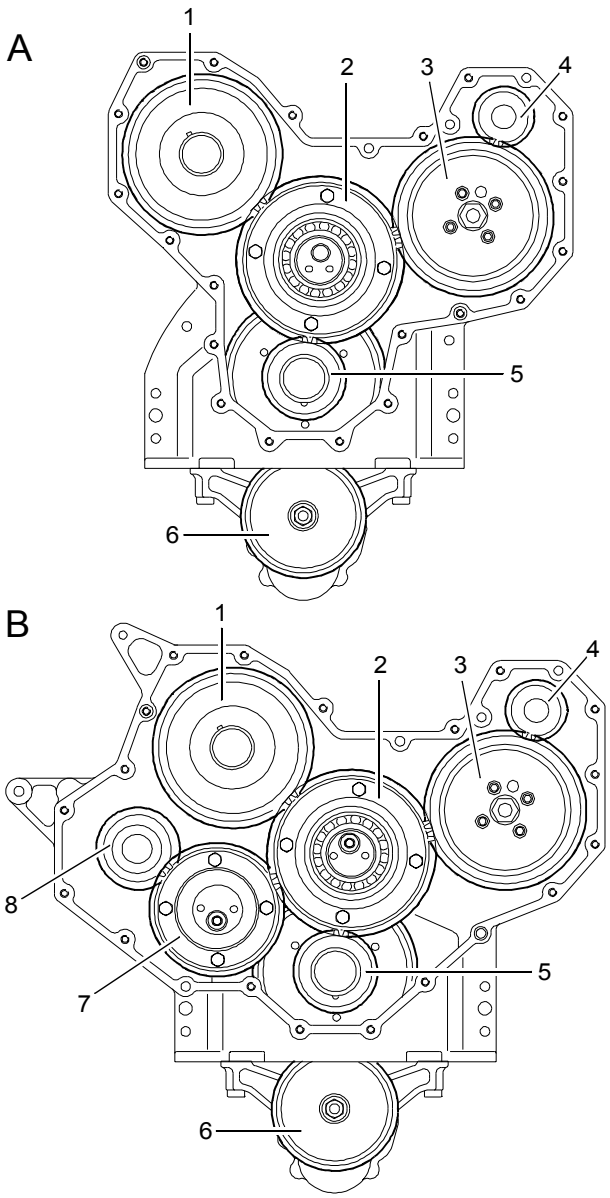

https://truckmanualshub.com/

Lubricating system

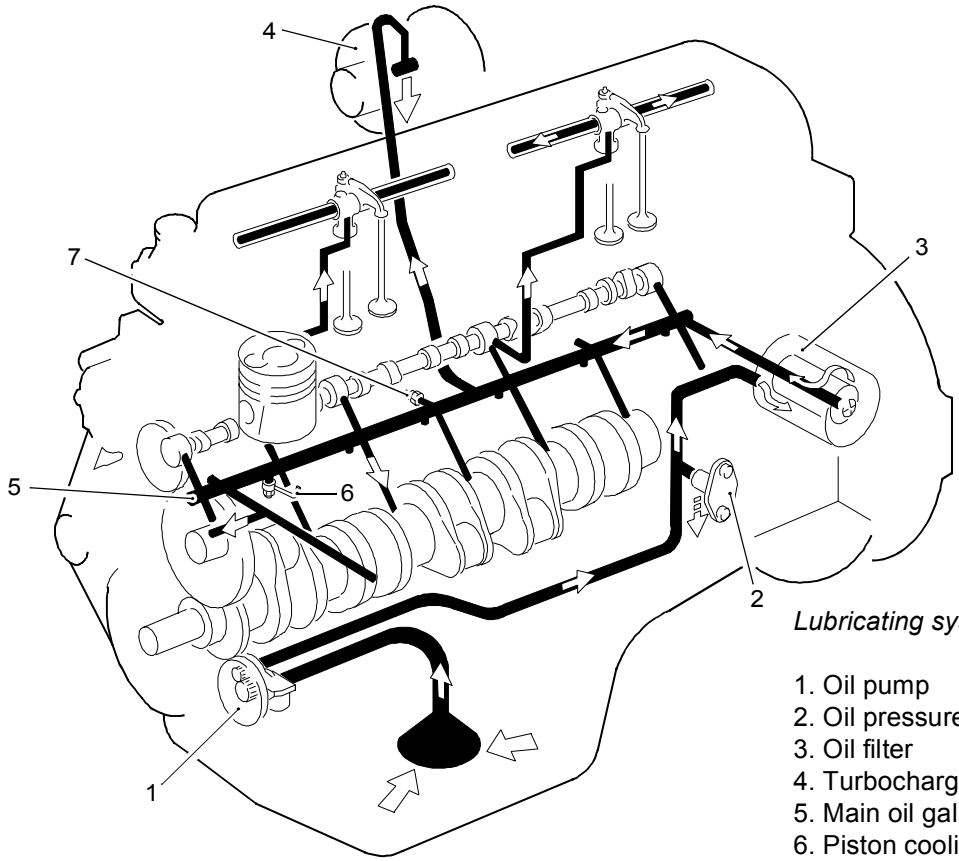

Lubricating system (66- and 74-engines)

1. Oil pump
2. Oil pressure regulating valve
3. Oil filter
4. Turbocharger
5. Main oil gallery
6. Piston cooling nozzle
7. Oil pressure sensor

The engine has a pressure lubricating system in which the oil pump (gear pump) is attached to the cylinder block lower face. The oil is sucked up by the pump through a suction strainer. After the pump the oil is led through an oilway to the oil pressure regulating valve via the oil cooler to the oil filter. After the filter, the oil is led through the main oil gallery from which oilways branch out. The oil is led through the oilways in the main bearings and through the crankshaft to the big-end bearings.

The oil is further directed from the main gallery to the turbocharger and to a possible compressor. In addition, the camshaft bearing points and the valve mechanism get their lubrication oil via the main oil gallery.

The undersides of the pistons of the engines with high output are always cooled by the oil spray when the oil pressure is more than 3 bar.

The oil pressure regulating valve is located under the oil filter on the left side of the engine, 84-engines on the right side. The regulating valve keeps the oil pressure constant, independent of the engine speed. At working speed the oil pressure is 2,5 to 5 bar depending on the temperature and the quality of lubricating oil. At idling the pressure is 1,0 bar minimum.

The oil filter is of main flow type. It has a replaceable cartridge mounted on the left side of the engine, 84-engines on the right side. At the bottom of the oil filter cartridge there is a by-pass valve for cold start or possible clogging of the filter.

Some engine types are equipped with a oil cooler located between the cylinder block and the oil filter. All oil that circulates through the filter also goes through the cooler and is cooled by the engine coolant circulating in the oil cooler.

The 84-engines are equipped with an plate type oil cooler, that is situated on the right side of the engine above the filter. The cooler is of main flow type.

https://truckmanualshub.com/

Cooling system

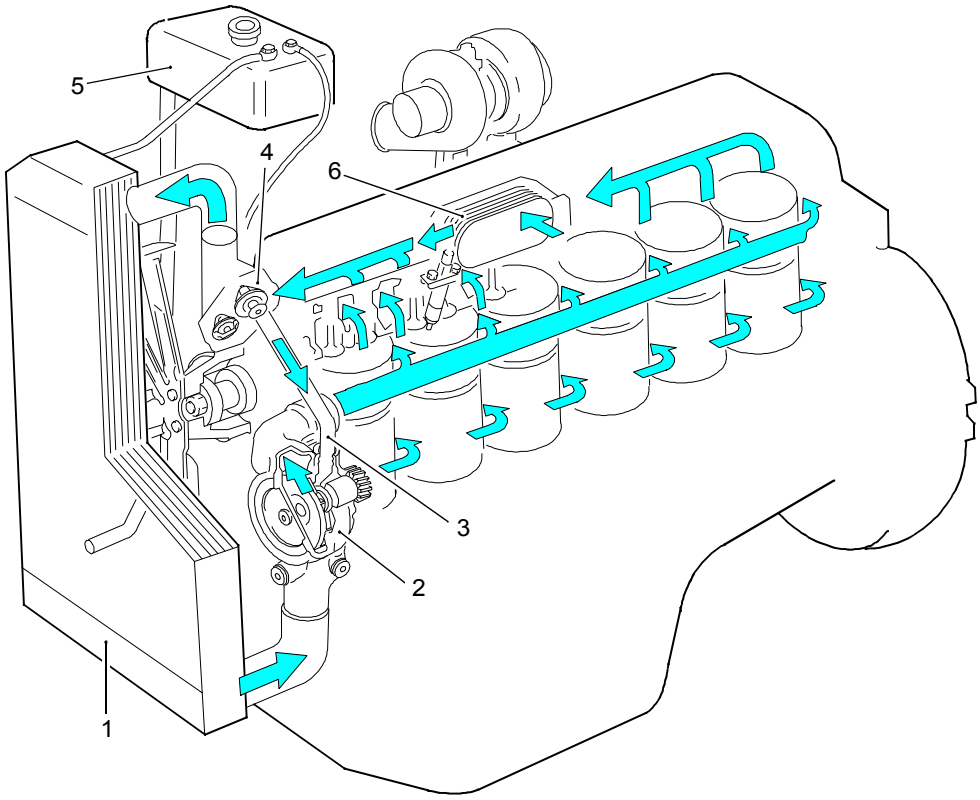

Cooling system (84-engine)

1. Radiator
2. Coolant pump
3. By-pass pipe
4. Thermostats
5. Expansion tank
6. Oil cooler

The coolant pump is attached to the front face of the cylinder block and the thermostat housing is mounted above it.

On 84-engines, the gear driven coolant pump is attached to the front face of the timing gear housing. The thermostat housing is mounted on front end of the cylinder head.

The system has the internal liquid circulation via the by-pass pipe. The circulation is regulated by the 2-way thermostat. This arrangement ensures a steady warming-up of the engine under all conditions.

In some 66- and 74-engines and 84-engines there are two separate thermostats where one of them is steering the by-pass of coolant liquid. The thermostats differ in types and opening temperatures. When the coolant temperature is below the thermostat opening temperature the coolant (A) circulates through the by-pass hole into the coolant pump. The smaller, singleacting thermostat (1) opens first (at 79°C) letting one part of the coolant (B) into the radiator. Following the load increase, also the other thermostat (2) opens (at 83°C). This is a double-acting type which closes the by-pass hole when it opens and directs the coolant (C) into the radiator. These engine models do not have any separate winter-type thermostats.

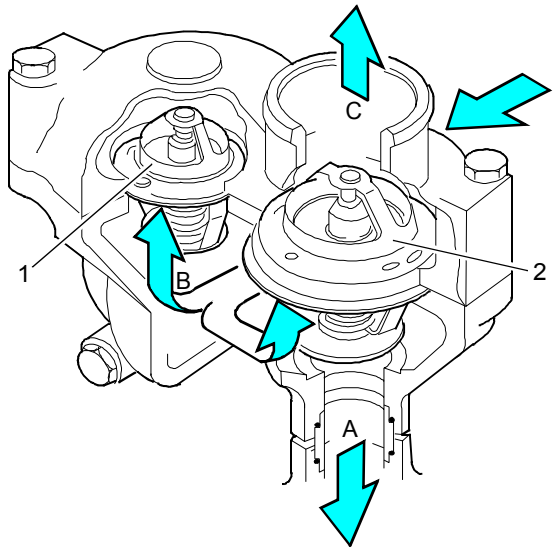

https://truckmanualshub.com/

Inlet and exhaust system

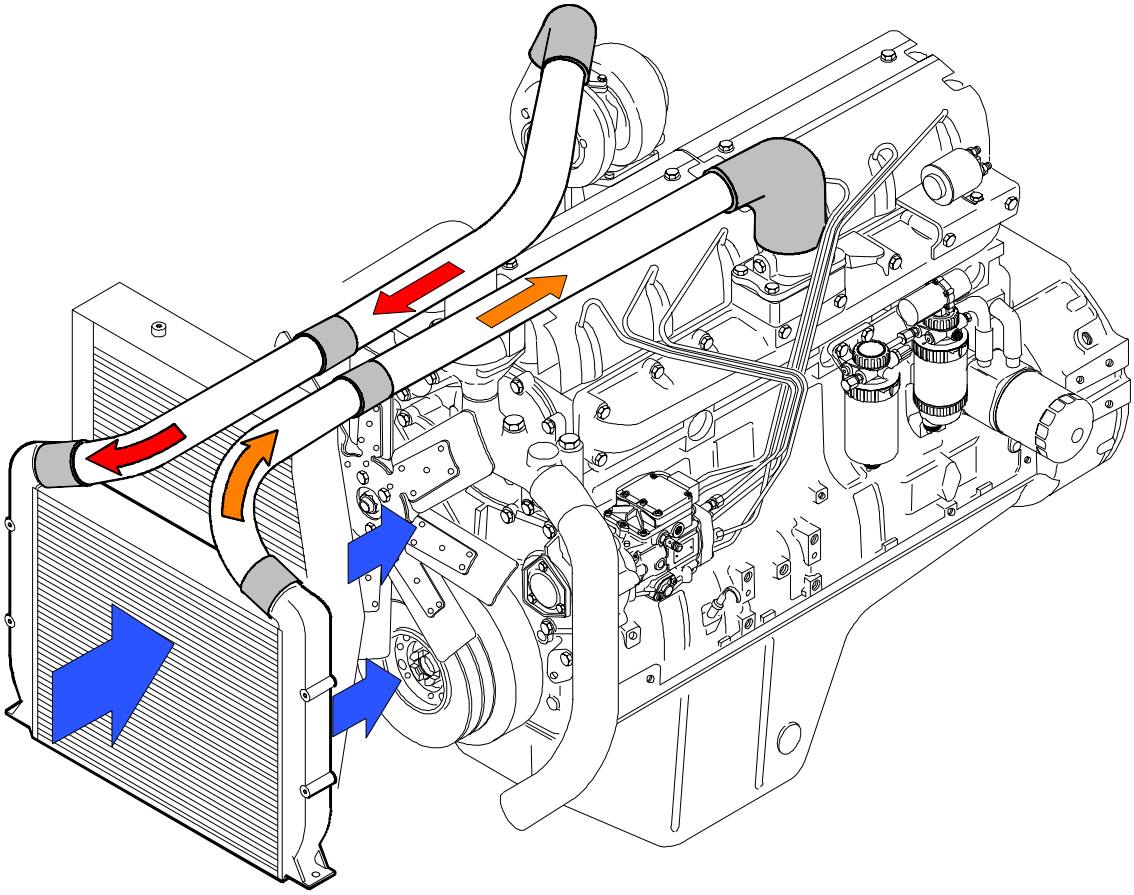

The filter system for the engine inlet air comprises a cyclone type pre-cleaner, and a paper filter which acts as the main filter. The incoming air is made to rotate in the cyclone pre-cleaner. This causes most of the impurities to settle out and collect in the cyclone pre-cleaner dust collector. The paper filter comprises one or two replaceable filter elements. The paper is corrugated and surrounded by a metal support.

The impurities in the air collect at the larger filter element which can be cleaned when necessary. The inner safety filter prevents impurities form entering the engine should the main filter element break, or be fitted incorrectly.

A mechanical or electrical service indicator can be mounted on the filter housing or on the inlet pipe to show when the filter cartridge is clogged. The inlet system also includes the hoses between the air cleaner and the turbocharger and the turbocharger and the intake manifold.

The exhaust manifold is attached to the cylinder head with high tensile bolts without a separate gasket. Retightening of the manifold bolts is unnecessary.

The turbocharger is a turbo-compressor driven by exhaust gas. The compact design of the turbocharger is fast to react even during low revolutions. The turbocharger is lubricated and cooled by the lubrication system of the engine. EWA-engine is equipped with a by-pass turbocharger where excessive air pressure is adjusted by a so-called by-pass channel. The boost pressure is adjusted correctly by the manufacturer, and must not be changed afterwards.

The compressed air is cooled on the air-to-air basis. The air coming from the turbocharger has a temperature abt. 150°C which is cooled by the cooling air of the engine. The intercooler's cell is ideally installed in front of the radiator or side-by-side with radiator. The cooling of the compressed air stabilises the combustion, irrespective of the temperature, and minimises the thermal and mechanical load of the engine thus lowering nitric oxides (NOx) and particles (PT). Certain engine versions can also be equipped with an air-to-water intercooler. In that case, the engine specification is ETI.

https://truckmanualshub.com/

TECHNICAL DATA

Cylinder block

Holes for guide pins . . . . . 13,250...13,320 mm
Main bearing housing diameter . . . . . 91,000...91,025 mm
Main bearing housing diameter (with bearing 8361 40950) . . . . . 92,000...92,025 mm
Cylinder liner location, diameter:
- upper end . . . . . 124,514...124,554 mm
- lower end . . . . . 123,000...123,040 mm
Inner diameter of camshaft bushing (fitted). . . . . 50,010...50,070 mm
Height of cylinder block . . . . . 428,170...428,430 mm

Cylinder block, 84-engines

Holes for guide pins . . . . . 13,250...13,320 mm
Main bearing housing diameter . . . . . 96,000...96,025 mm
Cylinder liner location, diameter:
- upper end . . . . . 125,014...125,054 mm
- lower end . . . . . 121,000...121,040 mm
Inner diameter of camshaft bushings (fitted). . . . . 50,010...50,070 mm
Height of cylinder block . . . . . 468,900...469,100 mm

Cylinder liners

Protrusion of cylinder liner above cylinder block top face . . . . . 0,030...0,080 mm
Max. permissible height difference between liners (under same head) . . . . . 0,02 mm

Outer diameter of cylinder liner guide:
- at upper end of liner . . . . . 124,475...124,500 mm
- at lower end of liner. . . . . 122,961...122,986 mm
Liner bore . . . . . 108,010...108,032 mm

84-engines
Outer diameter of cylinder liner guide:
- at upper end of liner . . . . . 124,975...125,000 mm
- at lower end of liner. . . . . 120,966...120,991 mm
Liner bore . . . . . 111,000...111,022 mm

Height of cylinder liner flange, std . . . . . 9,03...9,05 mm
Height of cylinder liner flange, 1st oversize. . . . . 9,08...9,10 mm
Height of cylinder liner flange, 2nd oversize . . . . . 9,13...9,15 mm
Height of cylinder liner flange, 3rd oversize . . . . . 9,23...9,25 mm
Outer diameter of cylinder liner flange . . . . . 131,700...131,800 mm

Cylinder head

Height of cylinder head . . . . . 104,800...105,000 mm
Height of cylinder head after repair grinding (minimum) . . . . . 104,000 mm
Inside diameter of valve guide (not fitted) . . . . . 9,000...9,015 mm
Outside diameter of valve guide . . . . . 16,028...16,039 mm
Diameter of valve guide bore in cylinder head . . . . . 16,000...16,018 mm
Position of valve guide top above cylinder head surface . . . . . 21 mm

https://truckmanualshub.com/

Depth of valve head face below cylinder head surface:
- inlet valve . . . . . 0,7±0,05 mm (max. 2,20 mm)
- exhaust valve . . . . . 0,6±0,05 mm (max. 2,20 mm)

Angle of valve seat:
- inlet valve . . . . . 35°+20'
- exhaust valve . . . . . 45°+20'

Width of valve seat:
- inlet valve . . . . . 2,9...3,7 mm
- exhaust valve . . . . . 1,3...2,3 mm

Diameter of exhaust valve seat ring . . . . . 44,070...44,132 mm
Diameter of exhaust valve seat rings recess . . . . . 44,000...44,025 mm
Diameter of exhaust valve seat ring (overhaul part 8366 52269) . . . . . 44,270...44,332 mm
Diameter of exhaust valve seal ring recess (overhaul part 8366 52269) . . . . . 44,200...44,225 mm

Diameter of inlet valve seat ring . . . . . 48,570...48,632 mm
Diameter of inlet valve seat ring recess . . . . . 48,500...48,525 mm
Diameter of inlet valve seat ring (overhaul part 8368 55347) . . . . . 48,770...48,832 mm
Diameter of inlet valve seat ring recess (overhaul part 8368 55347) . . . . . 48,700...48,725 mm

Valves, rockers and tappets

With a valve clearance of 1,0 mm:
- inlet valve opens . . . . . 0°±2° B.T.D.C
- inlet valve closes. . . . . 16°±2° A.B.D.C
- exhaust valve opens . . . . . 39°±2° B.B.D.C
- exhaust valve closes. . . . . 1°±2° A.T.D.C

Valve clearance cold and hot:
- inlet valve . . . . . 0,35 mm
- exhaust valve . . . . . 0,35 mm

Angle of valve seat in cylinder head:
- inlet valve . . . . . 35°+20'
- exhaust valve . . . . . 45°+20'

Width of valve seat in cylinder head:
- inlet valve . . . . . 2,9...3,7 mm
- exhaust valve . . . . . 1,3...2,3 mm

Angle of valve face:
- inlet valve . . . . . 35°-20'
- exhaust valve . . . . . 45°-20'

Outside diameter of valve head:
- inlet valve . . . . . 48 mm
- exhaust valve . . . . . 41 mm

Max valve movement:
- inlet valve . . . . . 10,9 mm
- exhaust valve . . . . . 12,1 mm

Inlet valve stem diameter . . . . . 8,960...8,975 mm
Exhaust valve stem diameter . . . . . 8,925...8,940 mm
Inlet valve stem clearance. . . . . 0,025...0,055 mm
- Reject limit . . . . . 0,30 mm

Exhaust valve stem clearance . . . . . 0,060...0,090 mm
- Reject limit . . . . . 0,35 mm

Inside diameter of valve guide before fitting . . . . . 9,000...9,015 mm
Outside diameter of valve guide . . . . . 16,028...16,039 mm
Diameter of valve guide bore in cylinder head . . . . . 16,000...16,018 mm
Protrusion of valve guide top above cylinder head surface. . . . . 21 mm

Depth of valve face below cylinder head surface:
- inlet valve . . . . . 0,7±0,05 mm (max. 2,20 mm)
- exhaust valve . . . . . 0,6±0,05 mm (max. 2,20 mm)

Valve spring free length . . . . . 69,8 mm
Spring pressure when spring compressed to a length of:
- 48,6 mm . . . . . 327±17 N
- 37,4 mm . . . . . 500±23 N
Rocker arm shaft diameter . . . . . 22,970...22,990
Diameter of rocker arm bore . . . . . 23,000...23,021
Max. permissible push rod deflection (when free). . . . . 0,4 mm
Free length of rocker arm spring . . . . . 80 mm
Spring pressure when spring compressed to a length 58 mm . . . . . 80...100 N
Outside diameter of tappet . . . . . 29,939...29,960 mm
Diameter of tappet bore in cylinder block . . . . . 30,000...30,043 mm

Camshaft

Diameter of camshaft bearing journal no 1 . . . . . 49,925...49,950 mm
Diameter of camshaft bearing journals (others that no. 1) . . . . . 49,885...49,910 mm
Diameter of camshaft bearing journals nos 2, 3 and 4 (66/74/84-engines) . . . . . 49,865...49,890 mm
Inside diameter of camshaft bearing bushes (when fitted in position) . . . . . 50,010...50,070 mm
Diameter of camshaft bearing bores (others than no. 1). . . . . 50,000...50,025 mm
Camshaft clearance in bearing bush no. 1 . . . . . 0,060...0,145 mm
Camshaft clearance in bearing bushes (others than no. 1) . . . . . 0,090...0,140 mm
Camshaft clearance in bearing bushes nos 2, 3 and 4 (66/74/84-engines) . . . . . 0,110...0,160 mm
Bearing bush tolerance in block (press fit) . . . . . 0,025...0,080 mm
Diameter of bearing bush bore in block . . . . . 55,620...55,650 mm
Camshaft end play with 0,5 mm gasket between cylinder block and timing gear
housing and between timing gear housing and front cover. . . . . 0,5...1,0 mm
Cam height (distance between back of cam and tip of cam):
- inlet valve . . . . . 41,180...41,430 mm
- exhaust valve . . . . . 40,080...40,330 mm
Cam lift:
- inlet valve . . . . . 7,38 mm
- exhaust valve . . . . . 8,28 mm
Camshaft max. permissible deflection (total indicator reading). . . . . 0,03 mm

Crankshaft

Crankpin diameter:
- standard . . . . . 67,981...68,000 mm
- 1. undersize 0,25 mm . . . . . 67,731...67,750 mm
- 2. undersize 0,50 mm . . . . . 67,481...67,500 mm
- 3. undersize 1,00 mm . . . . . 66,981...67,000 mm
- 4. undersize 1,50 mm . . . . . 66,481...66,500 mm
Crankpin length . . . . . 40,000...40,160 mm

Main bearing journal diameter:
- standard . . . . . 84,985...85,020 mm
- 1st undersize 0,25 mm . . . . . 84,735...84,770 mm
- 2nd undersize 0,50mm . . . . . 84,485...84,520 mm
- 3rd undersize 1,00 mm . . . . . 83,985...84,020 mm
- 4th undersize 1,50 mm . . . . . 83,485...83,520 mm
Main bearing housing diameter (in cylinder block) . . . . . 91,000...91,025 mm

https://truckmanualshub.com/

Main bearing shell thickness:
- standard . . . . . 2,955...2,965 mm
- 1st undersize 0,25 mm. . . . . 3,080...3,090 mm
- 2nd undersize 0,50 mm . . . . . 3,205...3,215 mm
- 3rd undersize 1,00 mm . . . . . 3,455...3,465 mm
- 4th undersize 1,50 mm . . . . . 3,705...3,715 mm
- bearing 8361 40950 (see instruction 5 B). . . . . 3,705...3,715 mm

Main bearing clearance. . . . . 0,050...0,127 mm
Length of thrust bearing journal (journal nearest to flywheel):
- standard (2 standard thrust plates). . . . . 45,000...45,080 mm
- 1st oversize (one std and one 0,1 mm overthick thrust plate) . . . . . 45,100...45,180 mm
- 2nd oversize (one std and one 0,2 mm overthick thrust plate). . . . . 45,200...45,280 mm
- 3rd oversize (one 0,1 mm and one 0,2 mm overthick thrust plate). . . . . 45,300...45,380 mm
- 4th oversize (two 0,2 mm overthick thrust plates). . . . . 45,400...45,480 mm

Other crankshaft journals may not be ground longer.

Crankshaft end float . . . . . 0,100...0,380 mm
Max. permissible ovality and other deformity of crankpins or journals . . . . . 0,03 mm
Crankshaft unbalance . . . . . 1,0 Ncm max.
Balancing unit ring gear location, diameter (44-engines) . . . . . 150,220...150,260 mm
Balancing unit ring gear I.D. (44-engines). . . . . 150,000...150,040 mm

Crankshaft, 84-engines

Crankpin diameter:
- standard . . . . . 72,981...73,000 mm
- 1. undersize 0,25 mm . . . . . 72,731...72,750 mm
- 2. undersize 0,50 mm . . . . . 72,481...72,500 mm
- 3. undersize 1,00 mm . . . . . 71,981...72,000 mm
- 4. undersize 1,50 mm . . . . . 71,481...71,500 mm

Crankpin length. . . . . 40,000...40,160 mm

Main bearing journal diameter:
- standard . . . . . 89,985...90,020 mm
- 1st undersize 0,25 mm . . . . . 89,735...89,770 mm
- 2nd undersize 0,50mm . . . . . 89,485...89,520 mm
- 3rd undersize 1,00 mm . . . . . 88,985...89,020 mm
- 4th undersize 1,50 mm . . . . . 88,485...88,520 mm

Main bearing housing diameter (in cylinder block) . . . . . 96,000...96,025 mm

Main bearing shell thickness:
- standard . . . . . 2,955...2,965 mm
- 1st undersize 0,25 mm. . . . . 3,080...3,090 mm
- 2nd undersize 0,50 mm . . . . . 3,205...3,215 mm
- 3rd undersize 1,00 mm . . . . . 3,455...3,465 mm
- 4th undersize 1,50 mm . . . . . 3,705...3,715 mm

Main bearing clearance. . . . . 0,050...0,127 mm
Length of thrust bearing journal (journal nearest to flywheel):
- standard (2 standard thrust plates). . . . . 45,000...45,080 mm
- 1st oversize (one std and one 0,1 mm overthick thrust plate) . . . . . 45,100...45,180 mm
- 2nd oversize (one std and one 0,2 mm overthick thrust plate). . . . . 45,200...45,280 mm
- 3rd oversize (one 0,1 mm and one 0,2 mm overthick thrust plate). . . . . 45,300...45,380 mm
- 4th oversize (two 0,2 mm overthick thrust plates). . . . . 45,400...45,480 mm

https://truckmanualshub.com/

Other crankshaft journals may not be ground longer.
Corner rounded of crankpins and journals . . . . . R4+0,5 mm
Crankshaft end float . . . . . 0,100...0,380 mm
Max. permissible ovalness and other deformity of crankpins or journals . . . . . 0,03 mm
Crankshaft unbalance . . . . . 1,0 Ncm max.

Flywheel

Interference fit between ring gear-flywheel . . . . . 0,425...0,600 mm
Before fitting the ring gear, heat up to a temperature of . . . . . 150...200°C
Flywheel unbalance . . . . . 1,0 Ncm max.
Max permissible axial wobble of flywheel clutch face, measured at inner edge
of clutch face on diameter 200 . . . . . 0,06:ø200

Balancing unit, 44-engines

Tooth backlash:
- crankshaft ring gear-balancer weight gear wheel . . . . . 0,1...0,3 mm
- between the balancer weights gear wheels . . . . . 0,05...0,250 mm
Balancing weights end float . . . . . 0,1...0,3 mm
Shaft diameter at bearing surfaces . . . . . 36,000...36,016 mm
Bearing bushing inner diameter (fitted) . . . . . 36,050...36,075 mm
Diameter of holes in body for shafts, rear end . . . . . 36,058...36,083 mm
Diameter of holes in body for shafts, front end . . . . . 35,958...35,983 mm
Shim thickness, cylinder block-balancer unit . . . . . 0,2 mm

Timing gears

Tooth backlash:
Crankshaft-idler gear . . . . . 0,05...0,25 mm
Idler gear-camshaft gear . . . . . 0,05...0,25 mm
Idler gear-fuel injection pump gear . . . . . 0,05...0,25 mm
Max. permissible side wobble of gears . . . . . 0,05 mm
Idle gear (slide bearing)
- Idler gear shaft, diameter . . . . . 54,951...54,970 mm
- Inner diameter of idler gear bushing (fitted) . . . . . 55,000...55,030 mm
Idle gear (slide bearing, 50 mm length shaft)
- Idler gear shaft, diameter . . . . . 55,151...55,170 mm
- Inner diameter of idler gear bushing (fitted) . . . . . 55,200...55,230 mm
Inner diameter of Idler gear hole . . . . . 60,000...60,030 mm
Camshaft gear hole diameter . . . . . 32,000...32,025 mm
Camshaft end diameter . . . . . 32,043...32,059 mm

Timing marks:
Timing marks on gears are in alignment when the 1st cylinder piston is at its top dead centre between compression and power strokes.

On crankshaft gear . . . . . 2 dots on tooth
On idler gear:
- against crankshaft gear mark . . . . . 0 on tooth
- against camshaft gear mark . . . . . 1 dot on tooth
- against fuel injection pump gear mark . . . . . 1 dot on notch
On camshaft gear . . . . . 1 dot on notch
On injection pump gear . . . . . 1 dot on tooth

Timing gears, 84-engines

Tooth backlash:

Crankshaft-idler gear	0,05...0,25 mm
Idler gear-camshaft gear	0,05...0,25 mm
Idler gear-fuel injection pump gear	0,05...0,25 mm
Max. permissible side wobble of gears	0,05 mm
Idler gear shaft, diameter	49,995...50,011 mm
Inner diameter of idler gear bearing hole	89,955...89,990 mm
Camshaft gear hole diameter	32,000...32,025 mm
Camshaft end diameter	32,043...32,059 mm

Timing marks:
Timing marks on gears are in alignment when the 1st cylinder piston is at its top dead centre between compression and power strokes.

On crankshaft gear	2 dots on tooth
On idler gear:	
- against crankshaft gear mark	1 dot on tooth
- against camshaft gear mark	1 dot on tooth
- against fuel injection pump gear mark	2 dots on notch
On camshaft gear	1 dot on notch
On injection pump gear	1 dot on notch

Connecting rod

Inside diameter of piston pin bush (with bush pressed into connecting rod)	40,025...40,040 mm
Outside diameter of piston pin bush	44,080...44,120 mm
Outside diameter of piston pin bush (oversize 8353 28326)	44,580...44,620 mm
Interference fit: connecting rod small end bushing-connecting rod	0,057...0,120 mm
Connecting rod small end bore	44,000...44,025 mm
Connecting rod small end bore (oversize bush)	44,500...44,525 mm
Connecting rod big end bore	71,730...71,749 mm

84-engines

Inside diameter of piston pin bush (with bush pressed into connecting rod)	44,025...44,040 mm
Outside diameter of piston pin bush (std)	48,080...48,120 mm
Outside diameter of piston pin bush (oversize 8363 38606)	48,580...48,620 mm
Interference fit: connecting rod small end bushing-connecting rod	0,057...0,120 mm
Connecting rod small end bore	48,000...48,025 mm
Connecting rod small end bore (oversize bush)	48,500...48,525 mm
Connecting rod big end bore	76,730...76,749 mm

Big end bearing shell thickness:

- standard	1,835...1,842 mm
- 1st undersize 0,25 mm	1,960...1,967 mm
- 2nd undersize 0,50 mm	2,085...2,092 mm
- 3rd undersize 1,00 mm	2,335...2,342 mm
- 4th undersize 1,50 mm	2,585...2,592 mm
Big-end bearing clearance	0,046...0,098 mm
End float (side clearance) at big-end on crankshaft	0,200...0,410 mm
Piston pin bushing location perpendicular to longitudinal axis of connecting rod to be within	0,15:100
Piston pin bushing location and big-end bearing location to be parallel to within	0,05:100

Weight marking (letter) at lower end.
Max. permissible weight difference between connecting rods in the same engine20 g
Position of connecting rod; weight marking at valve mechanism side
(away from the combustion chamber in the piston)

Piston, rings and pin

Minimum distance between piston and cylinder head (measured with a piece of lead wire thought the injector location hole) . . . . . 0,900...1,150 mm
Piston diameter:
- 17 mm from lower edge (33/44/66-engines) . . . . . 107,873...107,887 mm
- 19 mm from lower edge (74-engines) . . . . . 107,883...107,897 mm
Pin bore in piston . . . . . 40,003...40,009 mm
Piston pin diameter . . . . . 39,991...40,000 mm

Width of ring grooves:
- 1st groove (right-angled ring) . . . . . 2,560...2,580 mm
- 2nd grove . . . . . 2,520...2,540 mm
- 3rd groove . . . . . 4,040...4,060 mm

Side clearance of piston rings in their grooves:
- 1st ring (right-angled ring) . . . . . 0,07...0,102 mm
- 2nd ring . . . . . 0,03...0,062 mm
- 3rd ring . . . . . 0,05...0,082 mm
- reject limit . . . . . 0,15 mm

Piston ring height (in direction of cylinder):
- 1st ring (right-angled ring) . . . . . 2,478...2,490 mm
- 2nd ring . . . . . 2,478...2,490 mm
- 3rd ring . . . . . 3,975...3,990 mm

Piston ring gap (with piston fitted in cylinder):
- 1st ring (wedge shaped ring) . . . . . 0,40...0,55 mm
- 1st ring (right-angled ring) . . . . . 0,30...0,45 mm
- 2nd ring . . . . . 0,60...0,80 mm
- 3rd ring . . . . . 0,30...0,60
- reject limit 1st and 3rd ring . . . . . 1,0 mm
- reject limit 2nd ring . . . . . 1,5 mm

Max. permissible weight difference between pistons in same engine . . . . . 25 g
Piston to be heated up to 100°C before fitting gudgeon pin.
Piston position in cylinder: combustion chamber of piston to face towards injector.

Piston, rings and pin, 84-engines

Minimum distance between piston and cylinder head (measured with a piece of lead wire thought the injector location hole) . . . . . 0,900...1,150 mm
Piston diameter:
- 15 mm from lower edge . . . . . 110,863...110,877 mm
Pin bore in piston . . . . . 44,003...44,009 mm
Piston pin diameter . . . . . 43,994...44,000 mm

Width of ring grooves:
- 1st groove . . . . . wedge shaped ring
- 2nd grove . . . . . 2,520...2,540 mm
- 3rd groove . . . . . 4,040...4,060 mm

Side clearance of piston rings in their grooves:
- 1st ring . . . . . wedge shaped ring
- 2nd ring . . . . . 0,03...0,062 mm
- 3rd ring . . . . . 0,05...0,082 mm
- reject limit . . . . . 0,15 mm

https://truckmanualshub.com/

Piston ring height (in direction of cylinder):
- 1st ring . . . . . wedge shaped ring
- 2nd ring . . . . . 2,478...2,490 mm
- 3rd ring . . . . . 3,975...3,990 mm

Piston ring gap (with piston fitted in cylinder):
- 1st ring (wedge shaped ring) . . . . . 0,35...0,50 mm
- 2nd ring . . . . . 0,60...0,80 mm
- 3rd ring . . . . . 0,30...0,60
- reject limit 1. and 3. ring . . . . . 1,0 mm
- reject limit 2. ring . . . . . 1,3 mm

Max. permissible weight difference between pistons in same engine. . . . . 25 g
Piston to be heated up to 100°C before fitting gudgeon pin.
Piston position in cylinder: combustion chamber of piston to face towards injector.

Lubricating system

Oil pressure at normal running temperature:
- at idling speed (min.). . . . . 1,0 bar
- at running speed . . . . . 2,5...5,0 bar

Oil pressure regulating valve (engines w/o oil cooled piston)
Free length of oil pressure valve spring . . . . . 49,5 mm
Assembly length / load of oil pressure valve spring . . . . . 28,5 mm / 76 N

Oil pressure regulating valve (engines with oil cooled piston)
Free length of oil pressure valve spring . . . . . 49,8 mm
Assembly length / load of oil pressure valve spring . . . . . 28,5 mm / 127 N

Oil filter by-pass valve opens at a pressure difference of . . . . . 2±0,5 bar

Oil pump, 33- and 44-engines

Backlash between gears when crankshaft lies firmly
against the lower side of main bearings:
- crankshaft gear-lubricating oil pump gear. . . . . 0,05...0,25 mm
- between the pump gears . . . . . 0,16...0,26 mm

Diameter of drive shaft at bearings for body and cover . . . . . 17,966...17,984 mm
Diameter of shaft holes on body and cover. . . . . 18,000...18,018 mm
Diameter of gear wheel hole . . . . . 18,060...18,078 mm
Fixed shaft, diameter. . . . . 18,028...18,039 mm
Protrusion of fixed shaft end below pump body face . . . . . 0,5...1,0 mm
Thickness of cover gasket. . . . . 0,06...0,08 mm
Outside diameter of gear. . . . . 43,486...43,525 mm
Housing diameter . . . . . 43,650...43,750 mm
Thickness of gears . . . . . 24,000...24,027 mm
End play of gears . . . . . 0,03...0,11 mm
Depth of housing . . . . . 24,000...24,043 mm
Number of teeth on drive gear (33/44-engines) . . . . . 55 pcs
Number of teeth on drive gear (44-engines) . . . . . 60 pcs

Oil pump, 66-, 74- and 84-engines

Backlash between gears when crankshaft lies firmly against the lower side of main bearings:

- crankshaft gear-lubricating oil pump gear	0,05...0,25 mm
- between the pump gears	0,16...0,26 mm
Diameter of drive shaft at bearings for body and cover	17,966...17,984 mm
Diameter of drive shaft bearing hole on body and cover	18,000...18,018 mm
Diameter of fixed shaft at gear wheel	17,966...17,984 mm
Inner diameter of bearing for gear wheel which rotates on fixed shaft	18,000...18,018 mm
Fixed shaft in pump body, diameter	20,035...20,048 mm
Protrusion of fixed shaft end below pump body face	0,5 mm
Thickness of cover gasket	0,06...0,08 mm
Outer diameter of gear wheels	55,824...55,870 mm
Housing diameter	56,000...56,120 mm
Thickness of gears	32,000...32,027 mm
End play of gears	0,03...0,11 mm
Depth of housing	32,000...32,043 mm
Number of teeth on drive gears	46 pcs

Coolant pump, 33- and 44-engines

Outside diameter of bearing	52 mm
Diameter of bearing housing	51,979...52,009 mm
Shaft diameter at bearing	20,002...20,015 mm
Shaft diameter at impeller	15,907...15,920 mm
Impeller hole diameter	15,876...15,894 mm
Diameter of fan hub	0,3 Ncm max.
Max. permissible eccentricity of fan	±0,3 mm
The fan belt tension pushing from the middle, deflection from the line	10...15 mm

Coolant pump, 66- and 74-engines

Outside diameter of bearing	52 mm
Inside diameter of bearing housing in pump body	51,979...52,009 mm
Shaft diameter at bearing	19,980...19,993 mm
Shaft diameter at impeller	15,907...15,920 mm
Impeller hole diameter	15,876...15,894 mm
Diameter of the seal recess in the pump body	36,450...36,489 mm
Balancing precision of fan	0,3 Ncm max.
Belt deflection	10...15 mm

Pump equipped with reinforced bearing

Outer diameter of the front bearing	95 mm
Bearing up diameter in water pump wheel	95,000...95,035 mm
Outer diameter of bearings position in pump frame	59,991...60,009 mm

Coolant pump, 84-engines

Outside diameter of bearing	52 mm
Inside diameter of bearing housing in pump body	51,970...52,000 mm
Shaft diameter at bearing	24,996...25,009 mm
Shaft diameter at impeller	15,907...15,920 mm
Impeller hole diameter	15,879...15,890 mm
Diameter of the water seal recess in the pump body	39,981...40,020 mm

https://truckmanualshub.com/

Thermostat

Order no.	Type	Opening begins at	Fully open at	Max. stroke
8366 66334	ø67 mm / 83°C	83°±2°C	95°C	8,0 mm
8366 59685	ø67 mm / 86°C	86°±2°C	99°C	8,0 mm
8360 15156	ø54 mm / 79°C	79°±2°C	94°C	7,5 mm
8363 31590	ø67 mm / 83°C	83°±2°C	95°C	8,0 mm

Turbocharger

Schwitzer

	S1A	S1B	S2A	S2B
Axial clearance max.	0,14 mm	0,14 mm	0,14 mm	0,14 mm
Radial clearance (compressor end) max.	0,61 mm	0,51 mm	0,82 mm	0,95 mm
Compressor wheel locknut torque	6,8 Nm	8,1 Nm	10,2 Nm	15,6 Nm
Compressor housing screws torque	13,6 Nm	13,6 Nm	13,6 Nm	13,6 Nm
Turbine housing screws torque	21,0 Nm	21,0 Nm		21,0 Nm

Schwitzer

	S100	S200	S300
Axial clearance max.	0,10 mm	0,10 mm	0,12 mm
Radial clearance (compressor end) max.	0,82 mm	0,88 mm	0,88 mm
Compressor wheel locknut torque	6,8 Nm	13,6 Nm	20,3 Nm
Compressor housing screws torque	13,6 Nm	13,6 Nm	13,6 Nm
Turbine housing screws torque	21,0 Nm	21,0 Nm	21,0 Nm

https://truckmanualshub.com/

TIGHTENING TORQUES

Object	Nm
Cylinder head bolts and nuts	80 Nm + 90° + 90°
Cylinder head studs to cylinder block	30
Main bearing screws	200
Connecting rod screws	40 Nm + 90°
Crankshaft nut, 33/44	600
Crankshaft nut, 66/74/84	1000
Crankshaft pulley screws	30
Crankshaft pulley screws, 84	80
Flywheel screws	150
Flywheel screws, 84	200
Flywheel housing screws:	
- M12	150
- M10	80
Idler gear screws, 33/44/66:	
- M10	60
- M14	200
Idler gear screws (with ball bearing), 66/74/84:	
- M14	180
- M8	22
Piston cooling valve	30
Oil pump retaining screws	60
Oil cooler connecting piece	60
Coolant pump pulley screw, 33/44	80
Coolant pump pulley nut, 66/74	120
Coolant pump gear nut, 84	180
Belt tightener screw	48
Exhaust manifold screws	50
Injector attaching nuts (on studs)	15
Injector nozzle sleeve	60

Always use the torque values listed in the following tables when specific torque values are not available.

Thread	Strength class	
	8.8	10.9
M8	25 Nm	35 Nm
M10	50 Nm	75 Nm

Use a washer with the aluminium parts.

https://truckmanualshub.com/

SPECIAL TOOLS

Cylinder block

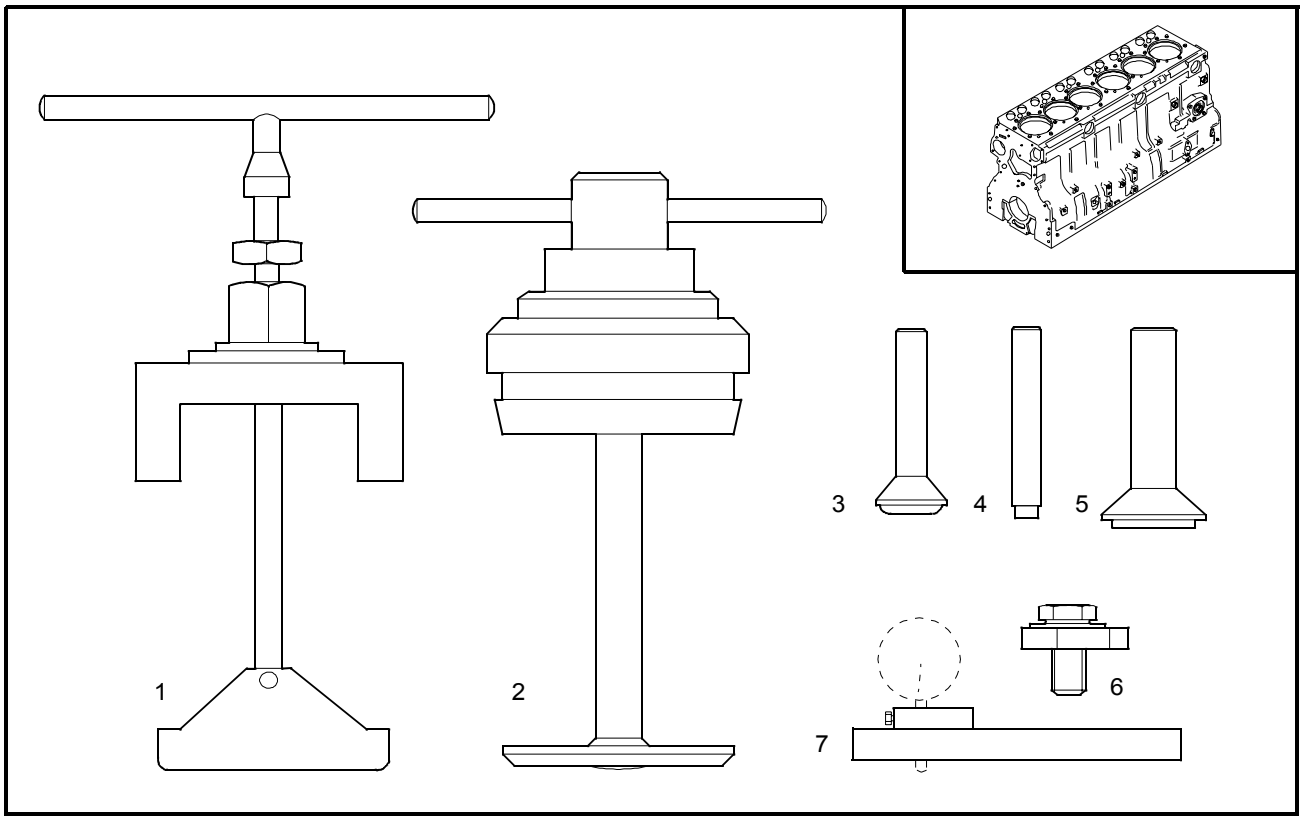

Ref.	Description	Order no.	33	44	66	74	84
1	Puller for cylinder liner	9051 73100	x	x	x	x	
		9104 51500					x
2	Milling cutter for cylinder liner seat	9101 65600	x	x	x	x	
		9104 52000					x
-	Spare cutting blade for milling cutter	9045 87600	x	x	x	x	x
3	Drift for 40 mm cup plug	9052 46620	x	x	x	x	x
4	Drift for 16 mm cup plug	9052 46650	x	x	x	x	x
5	Drift for fitting camshaft cup plug	9025 87400	x	x	x	x	x
6	Press tool for cylinder liner	9101 66300	x	x	x	x	x
7	Holder for dial gauge	9025 79200	x	x	x	x	x

https://truckmanualshub.com/

Timing gear- and flywheel housing

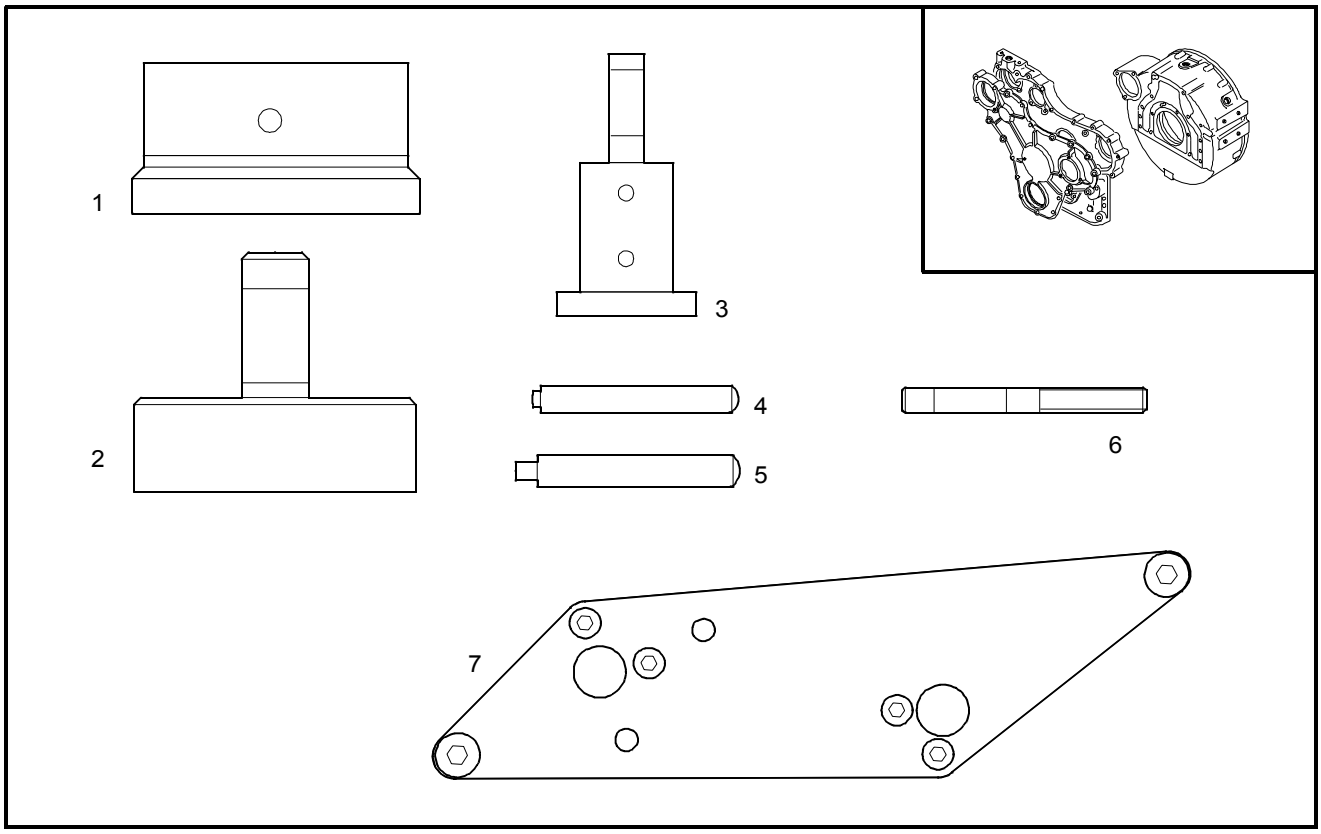

Ref.	Description	Order no.	33	44	66	74	84
1	Centring tool for flywheel housing	9052 46400	x	x	x	x	
		9104 52700					x
2	Drift for fitting rear crankshaft seal	9052 46300	x	x	x	x	
		9104 52600					x
3	Drift for fitting front crankshaft seal	9030 15200	x	x	x	x	
		9103 94600					x
4	Drift for tension pins in timing gear housing	9025 98800	x	x	x	x	
5	Drift for tension pins in timing gear- and flywheel hou	9025 98700	x	x	x	x	x
6	Centring pin for idler gear, narrow timing gear hous.	9104 34600					x
7	Centring tool for idler gear, broad timing gear hous.	9104 05400					x

https://truckmanualshub.com/

Cylinder head and valve mechanism

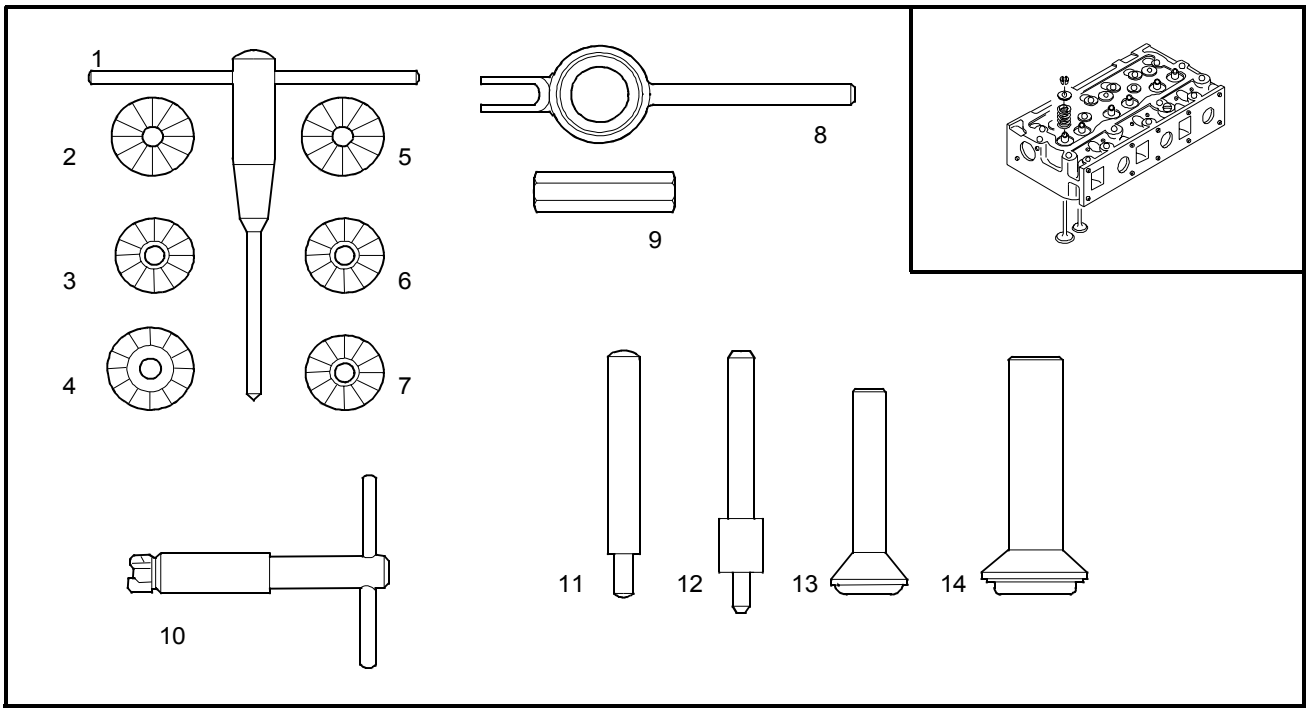

Ref.	Description	Order no.	33	44	66	74	84
1	T-handle for valve seat milling cutter	9101 66100	x	x	x	x	x
2	Milling cutter for facing exhaust valve seat	9101 71100	x	x	x	x	x
3	Milling cutter for exhaust valve seat	9101 65502	x	x	x	x	x
4	Inner milling cutter for exhaust valve seat	9101 65503	x	x	x	x	x
5	Milling cutter for facing inlet valve seat	9101 75800	x	x	x	x	x
6	Milling cutter for inlet valve seat	9101 65505	x	x	x	x	x
7	Inner milling cutter for inlet valve seat	9101 65506	x	x	x	x	x
8	Lever for compressing valve spring	9101 66200	x	x	x	x	x
9	Counter nut for lever above	9052 47200	x	x	x	x	x
10	Milling tool for injector seat	9101 66000	x	x	x	x	x
11	Drift for removing valve guide	9101 65800	x	x	x	x	x
12	Drift for fitting valve guide	9101 65900	x	x	x	x	x
13	Drift for 36 mm cup plug	9052 46660	x	x	x	x	x
14	Drift for 45 mm cup plug	9103 94800			x	x	x

https://truckmanualshub.com/

Crank mechanism

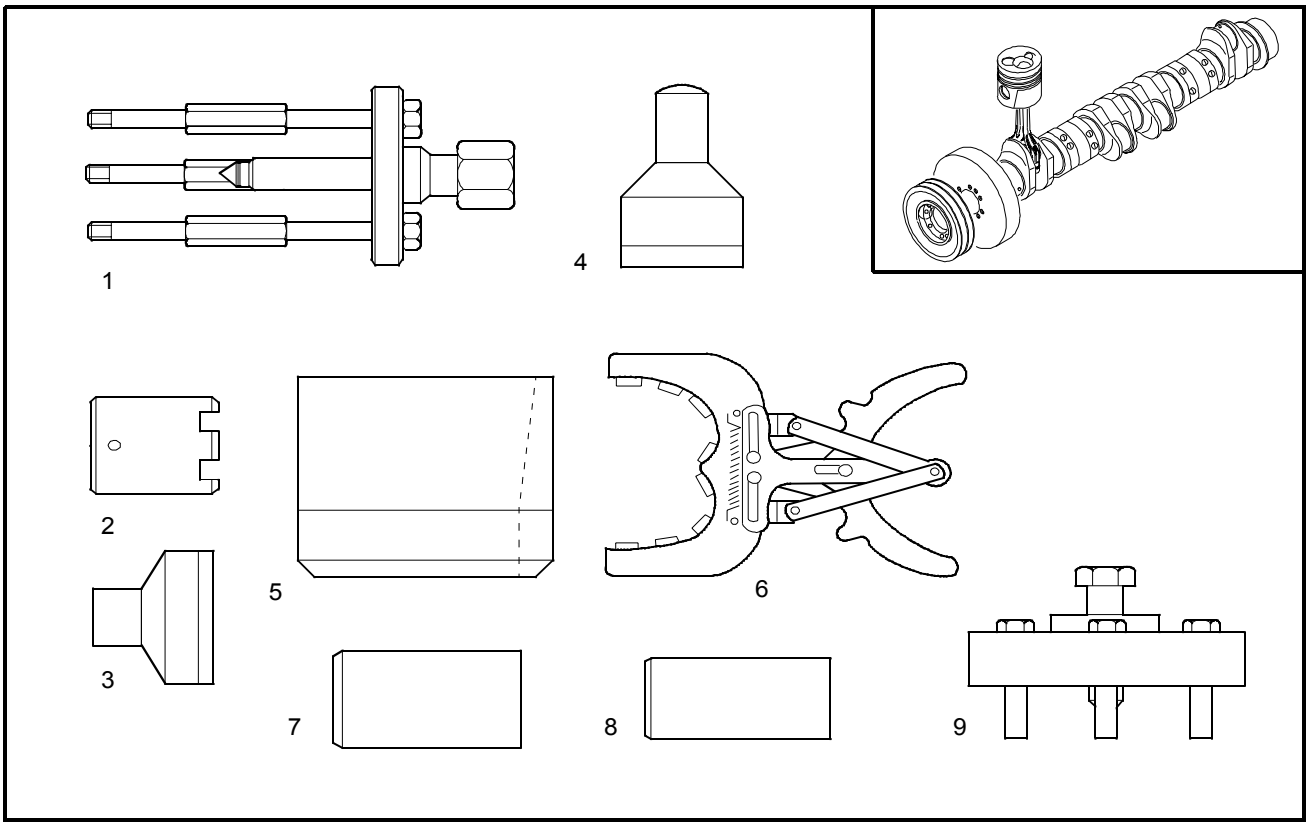

Ref.	Description	Order no.	33	44	66	74	84
1	Puller for crankshaft gears	9052 48800	x	x	x	x	
2	Spanner for crankshaft nut	9024 55800			x	x	x
3	Spanner for crankshaft nut	9101 65700	x	x	x		
4	Drift for fitting dust cover	9025 98900	x	x	x	x	
5	Conical sleeve for fitting pistons	9020 01100	x	x	x	x	
		9105 18700					x
6	Piston ring pliers	9052 46900	x	x	x	x	x
7	Drift for fitting crankshaft gears	9103 94700	x	x	x	x	x
8	Drift for fitting oil deflector ring, crankshaft front end	9103 94900					x
9	Puller for crankshaft hub	9104 53300					x

https://truckmanualshub.com/

Coolant pump

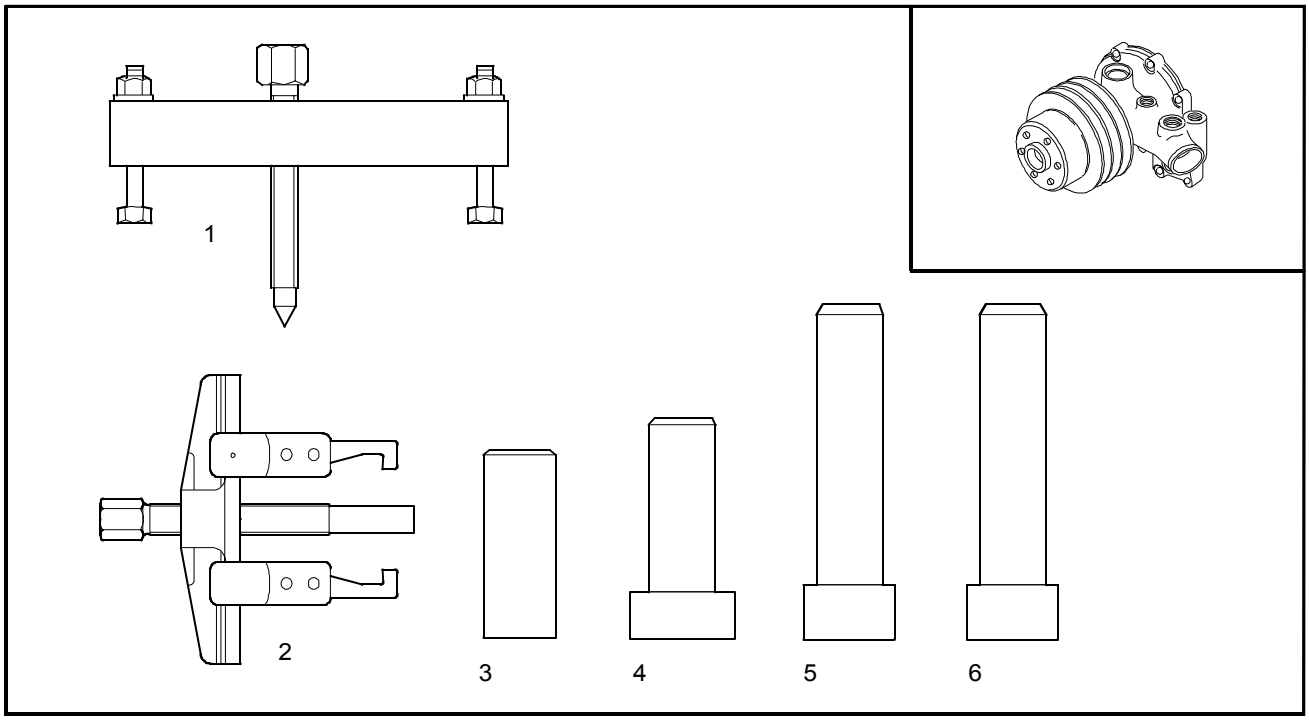

Ref.	Description	Order no.	33	44	66	74	84
1	Puller for coolant pump impeller	9101 93200			x	x	
2	Puller for coolant pump impeller	9104 27700	x	x			
3	Drift for fitting coolant pump water seal	9051 79300	x	x	x	x	
4	Drift for fitting coolant pump bearings	9103 41300					x
5	Drift for fitting coolant pump shaft seal	9103 41000					x
6	Drift for fitting coolant pump water seal	9103 41100					x

https://truckmanualshub.com/

Fuel system

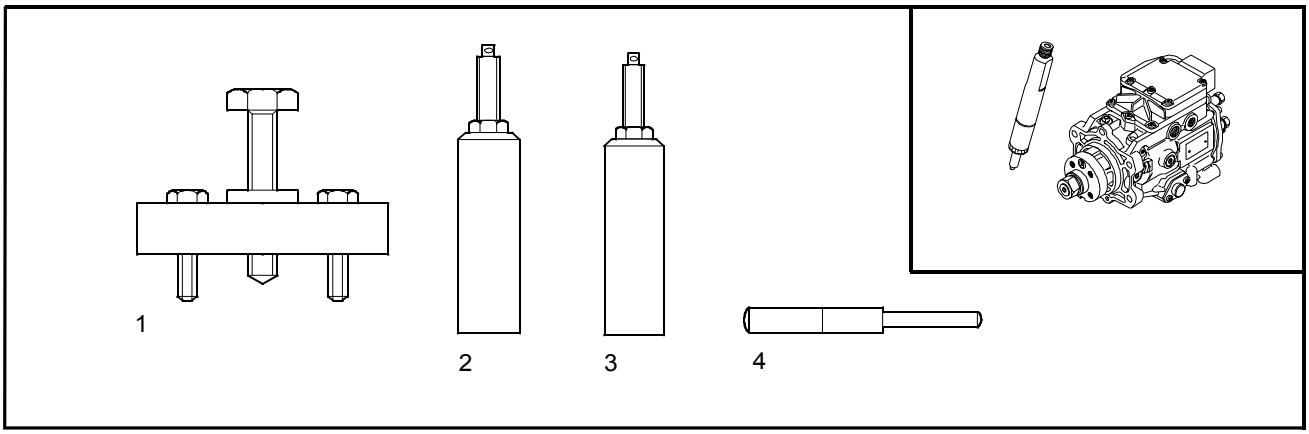

Ref.	Description	Order no.	33	44	66	74	84
1	Puller for injection pump gear	9052 48900					x
2	Puller for injector (M12x1,5)	9051 71300	x	x	x	x	
3	Puller for injector (M14x1,5)	9104 53700					x
4	Timing pin for injection pump (Bosch VP 30 / VP 44)	9109 80100	x	x	x	x	x

https://truckmanualshub.com/

WORK INSTRUCTIONS

1. CYLINDER BLOCK

A. Measuring cylinder liner wear

1. Using a micrometer set the dial gauge to zero using a new cylinder liner indicating the initial dimension of the bore. See "**Technical data**", point "**Cylinder liners**".

2. Clean the inner surface of the cylinder liner thoroughly before measurement.

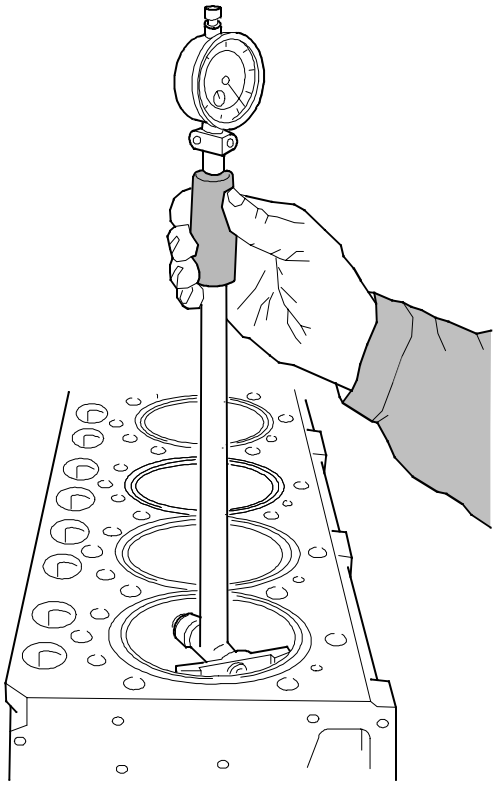

3. Perform the measurement crosswise at the liner top end, lower end and middle.

4. Check the gauge reading for maximum wear and ovalness (compare with rated).

B. Removing cylinder liner

1. If the cylinder liners are to be used again they should be marked so that they can be fitted in the same position.

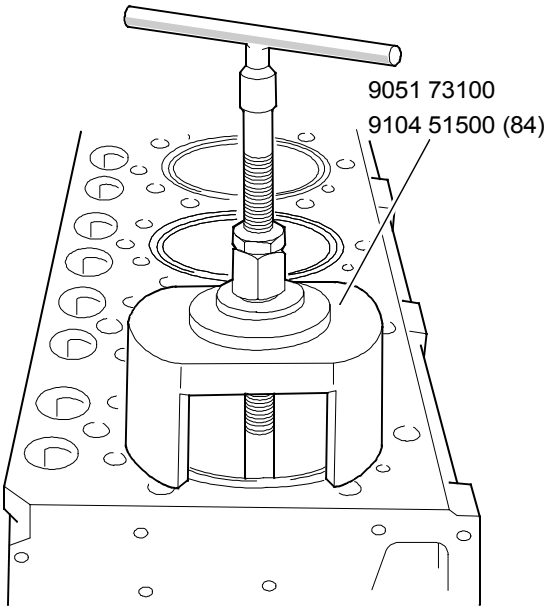

2. Remove the cylinder liners using cylinder liner puller 9051 73100 or 9104 51500 (84-engines).

C. Checking cylinder block

1. Clean the cylinder block and all oil ways.

2. Check the cooling channels and remove the scale and sediment to ensure engine cooling.

3. Check the tightness of the cup plugs and threaded plugs in the cylinder block as well as the condition of the cylinder block and sealing faces.

4. Measure the wear of the camshaft bearing points (compare with rated).

Note! If it is necessary to machine the upper face of the cylinder block, the pistons must be shortened by the same dimension. Observe the valve disc spaces on the piston upper face.

D. Changing camshaft bushing

33- and 44-engines

1. Extract the bushing with an internal puller, for example Sykes 854. If the camshaft rear end plug is removed the bushing can be forced out with a long drift.

2. Clean the bushing location carefully.

https://truckmanualshub.com/

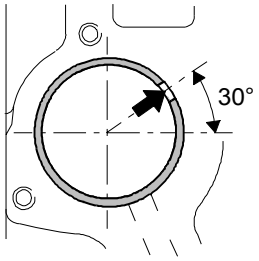

3. Fit the oil hole of the bushing in **30°** angle from horizontal level as picture shows. It is unnecessary to ream the bushing because it has a correct inner diameter when it is fitted in place.

66-, 74-, and 84-engines

On the 66-, 74- and 84-engines, all camshaft bearing points are provided with a separate bearing bushing.

1.Remove the camshaft rear end plug and tap the bushings out with a long drift. Observe the different outer diameters when removing.

2. Clean the bushings location carefully.

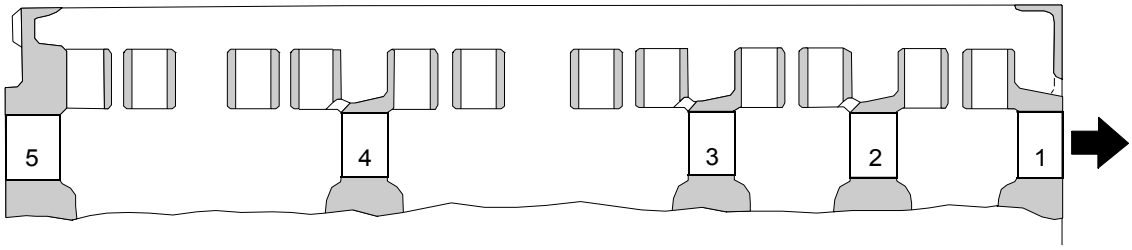

Hole diameters for the bushings. Numbering begins from the front end of the engine.

Hole diameter

1. 55,62...55,65 mm
2. 55,42...55,45 mm
3. 55,22...55,25 mm
4. 55,42...55,45 mm
5. 55,64...55,67 mm

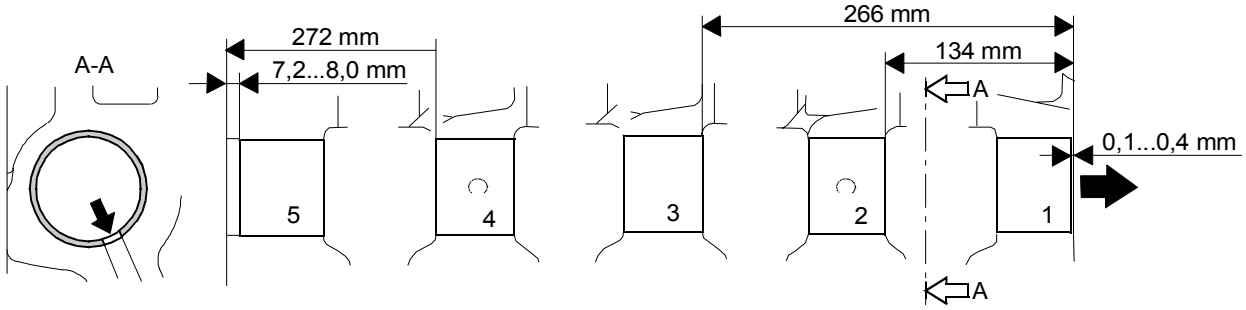

3. Press in a new bushings (2 - 5). Observe the different outer diameters. Note the position of the oil hole. It is unnecessary to ream the bushing because it has a correct inner diameter when it is fitted in place.

Note! The cam shaft front end bushing (1) is equipped with the oil groove on the outside. Fit the oil hole of the bushing in **30°** angle from horizontal level (see picture at top of the page). The bushing is after assembly in its correct measures (no need for machining).

https://truckmanualshub.com/

E. Fitting plug at camshaft rear end

1. Clean the seat for the plug.

2. Apply sealing compound to the contact surface of the plug

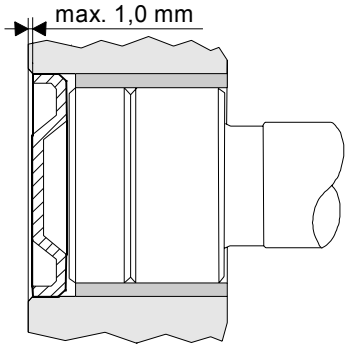

3. Drive in the plug with fitting drift 9025 87400.

Note! Do not drive in the plug too far because it will affect the camshaft end float.

F. Oversize bushings for camshaft

33- and 44-engines

If the location of the camshaft bushing (front bearing) is damaged, a bushing with a **0,4 mm** oversize outer diameter can be fitted. Bushings are available even for other camshaft bearings which do not normally have bushings. Order numbers and machining dimensions for the bushing locations are shown in the figure.

Observe the position of the bushing oil holes. It is unnecessary to ream the bushings after fitting.

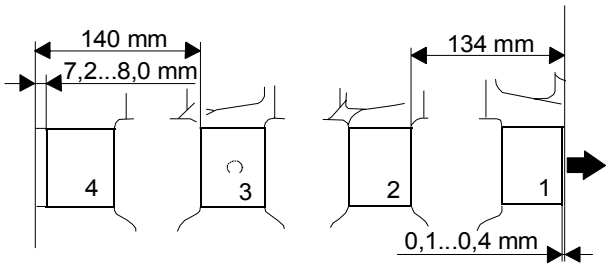

Order numbers of the oversize camshaft bushings and hole diameters for the bushings, 33-engines. Numbering begins from the front end of the engine.

	Order no.	Hole diameter
1.	8368 66036	56,02...56,05 mm
2.	8368 52460	55,42...55,45 mm
3.	8368 52460	55,42...55,45 mm
4.	8368 52461	55,64...55,67 mm

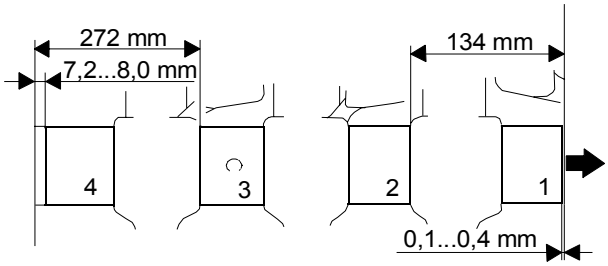

Order numbers of the oversize camshaft bushings and hole diameters for the bushings, 44-engines. Numbering begins from the front end of the engine.

	Order no.	Hole diameter
1.	8368 66036	56,02...56,05 mm
2.	8368 52460	55,42...55,45 mm
3.	8368 52460	55,42...55,45 mm
4.	8368 52461	55,64...55,67 mm

66-, 74- and 84-engines

Order numbers of the oversize camshaft bushings and hole diameters for the bushings. Numbering begins from the front end of the engine. Installing places are same as with the standard bushings.

	Order no.	Hole diameter
1.	8368 66036	56,02...56,05 mm
2.	8368 52466	55,62...55,65 mm
3.	8368 52460	55,42...55,45 mm
4.	8368 52466	55,62...55,65 mm
5.	8368 52467	55,84…55,87 mm

G. Fitting plug at camshaft rear end (oversize bushings)

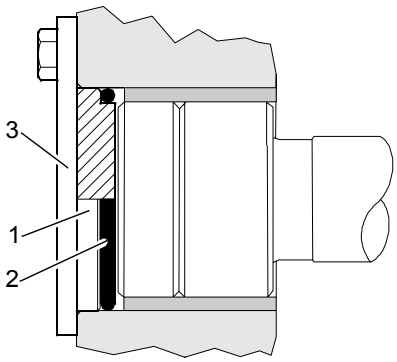

The camshaft rear end plug is replaced with plug 8363 24391 (1) and o-ring 6146 05125 (2) after machining. Use plate 8361 24210 (3) in those engines where the flywheel housing is not covering the blocking plug.

https://truckmanualshub.com/

H. Fitting cylinder liner

1. Clean the cylinder liner and its recess in the cylinder block. Without o-rings the liner should rotate easily in its recess.

2. Apply a thin layer of marking paint on the underside of the cylinder liner flange. Fit the cylinder liner without o-rings and turn it forwards and backwards. Lift out the liner and check that paint has been deposited on the whole contact surface.

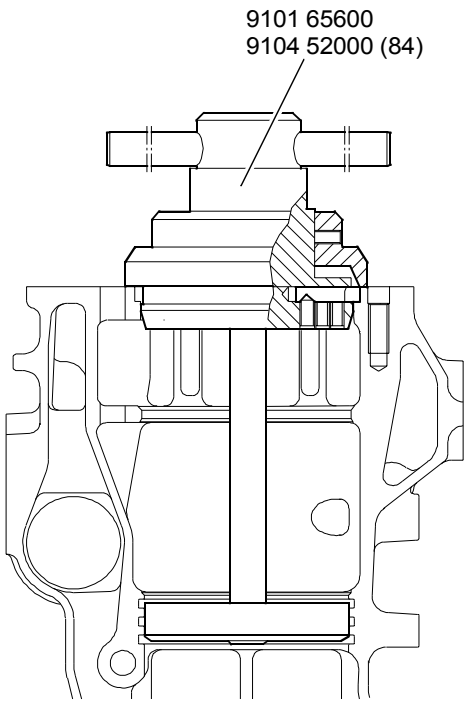

3. If the recess is damaged, or the cylinder liner height (see point 5) needs to be adjusted, use milling cutter 9101 65600 or 9104 52000 (84-engines). If necessary, a light lapping can be executed after milling with the help of the cylinder liner. Apply lapping paste to the underside of the cylinder liner flange, and twist the liner with twisting tool. Lapping is not suitable for adjusting the cylinder liner height.

4. Clean the contact surfaces.

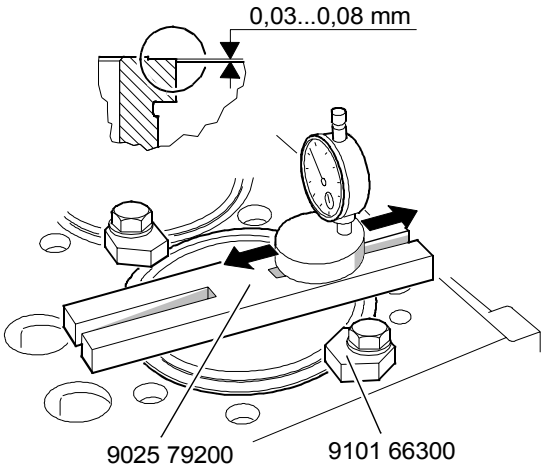

5. Fit the cylinder liners and fix each liner with two press tools 9101 66300. Measure the cylinder liner height with a dial gauge and holder 9025 79200. Zero the dial gauge against a flat surface, for example, the cylinder block face. Measure each liner in four places. The height of the liner above the cylinder block face should be **0,03...0,08 mm**. The height difference between cylinder liners under the same cylinder head must not exceed **0,02 mm**, nor must an intermediate cylinder liner lie lower than an outer one.

6. If the cylinder liner height is too low, a liner with a higher flange is fitted.

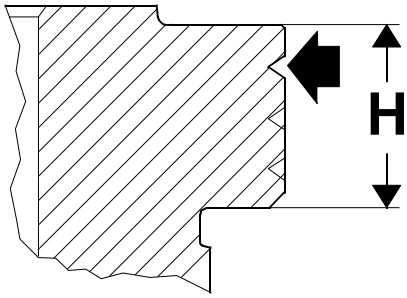

33-, 44-, 66- and 74-engines

Order no.	H	Marking-grooves pcs
8366 47420	$9{,}03^{+0{,}02}$	- (std.)
8366 47933	$9{,}08^{+0{,}02}$	1
8366 47934	$9{,}13^{+0{,}02}$	2
8366 47935	$9{,}23^{+0{,}02}$	3

84-engines

Order no.	H	Marking-grooves pcs
8368 67048	$9{,}03^{+0{,}02}$	- (std.)
8368 67050	$9{,}08^{+0{,}02}$	1
8368 67051	$9{,}13^{+0{,}02}$	2
8368 67052	$9{,}23^{+0{,}02}$	3

Cylinder liners with oversize flanges (higher flanges) are marked with grooves on the outer circumference as follows:

1st oversize, 0,05 mm = 1 marking groove
2nd oversize, 0,10 mm = 2 marking grooves
3rd oversize, 0,20 mm = 3 marking grooves

Note! Recess depth is adjusted with a cylinder liner recess cutter 9101 65600 or 9104 52000 (84-engines).

7. If the liner height of a cylinder liner is not the same all the way round, the cylinder liner flange and the cylinder block recess depth should be checked. Cylinder liners with warped flanges should be discarded.

https://truckmanualshub.com/

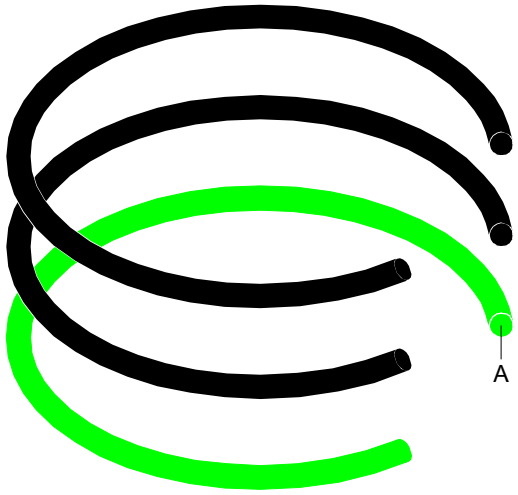

8. Fit the o-rings into the grooves in the cylinder liner. 84-engines, fit the o-rings into the grooves in the cylinder block. Fit the green o-ring (A) into the lowest groove. Lubricate the o-rings with a liquid soap (not with engine oil).

Note! Stretch the o-rings as little as possible when fitting them. Max allowable stretching is 6 %.

9. Press the cylinder liners into the cylinder block. It should be easy to press them fully home. Make sure that the liners do not rise up after fitting.

https://truckmanualshub.com/

https://truckmanualshub.com/

2. FLYWHEEL HOUSING

A. Fitting flywheel housing

The flywheel housing is centred on the cylinder block by two tension pins. Even the flywheel housings which are delivered as spare parts have ready-made holes for the pins.

1. Clean the sealing surfaces between the cylinder block and the flywheel housing.

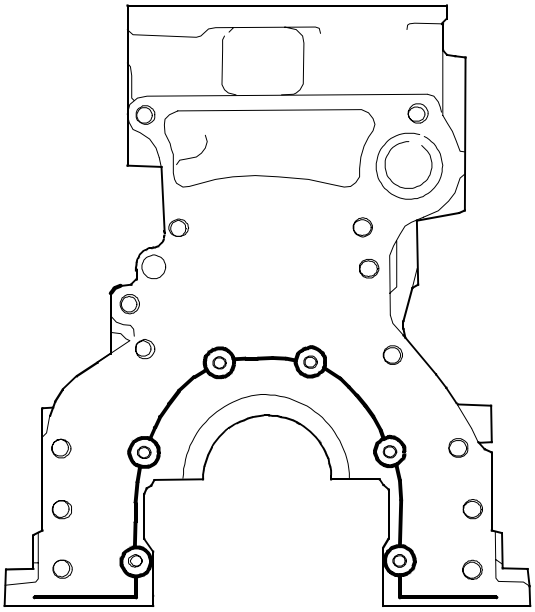

2. Apply silicone sealant as shown in picture above.

3. Lift the flywheel housing into place and fit all the bolts.

4. Centre the housing with centring tool 9052 46400 or 9104 52700 (84-engines). **Note!** This is important of the engines with a turbine clutch. Fit the tension pins with drift 9025 98700.

5. Tighten the fixing bolts, the inner ring socket head bolts to **80 Nm** and outer ring hexagonal bolts to **150 Nm**.

B. Changing crankshaft rear oil seal

1. Lift out the engine. Remove the clutch assembly (and possible turbine clutch).

2. Remove the flywheel.

3. Remove the oil seal. Do not damage the crankshaft.

4. Clean the seal location and grind off any burrs.

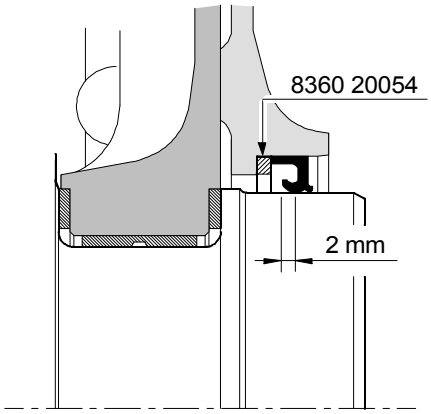

Note! If the crankshaft is worn at the sealing location, a 2 mm spacer ring, order no. 8360 20054, can be fitted in front of the crankshaft rear oil seal.

5. Fit the seal as follows:

- Do not remove the plastic sleeve in before hand.

- Fit the seal dry, **not oiled**!

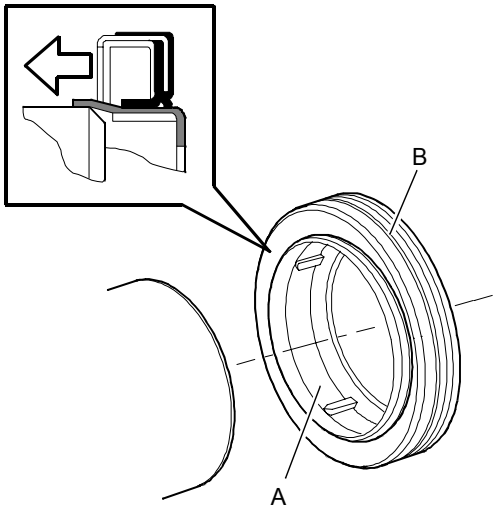

- Put the sleeve (A) against the crankshaft rear end so that the sleeve is on the shaft bevelling.

- Push the seal (B) over the sleeve on the shaft and further against the flywheel housing.

https://truckmanualshub.com/

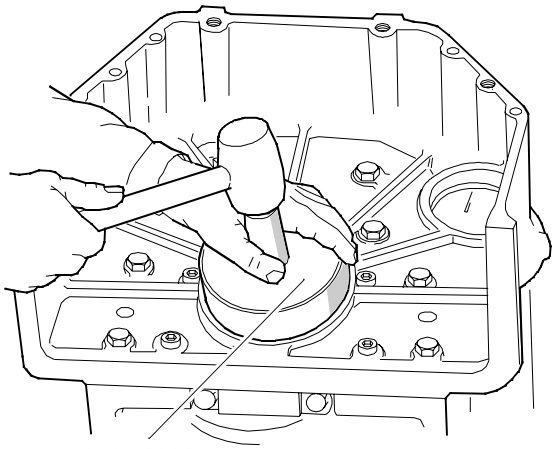

- Remove the sleeve and hit the seal into position with the fitting tool 9052 46300 or 9104 52600 (84-engines).

https://truckmanualshub.com/

3. CYLINDER HEAD

A. Removing cylinder head

1. Clean the engine externally and drain the coolant. Disconnect the coolant hoses from the cylinder head and the thermostat housing.

2. Remove the suction hoses between the turbocharger and the air filter and between the turbocharger and the inlet manifold.

3. Disconnect the turbocharger pressure and return oil pipes.

4. Disconnect the current from the main switch. Disconnect wires from the intake air heater.

5. Remove the injector leak-off fuel pipes and the delivery pipes. Remove the injectors. Fit blanking-off caps on all open connections.

6. Remove the inlet and exhaust manifolds and the thermostat housing.

Note! It is possible to remove the cylinder head even thought these parts are attached to the head.

7. Remove the valve cover.

8. Remove the rocker arm mechanism and the push rods.

9. Loosen all the cylinder head bolts first by a 1/4 turn and then remove them. Remove the cylinder head.

B. Removing valves

Ensure that valves which are to be re-used are marked, so that they are fitted in their original locations.

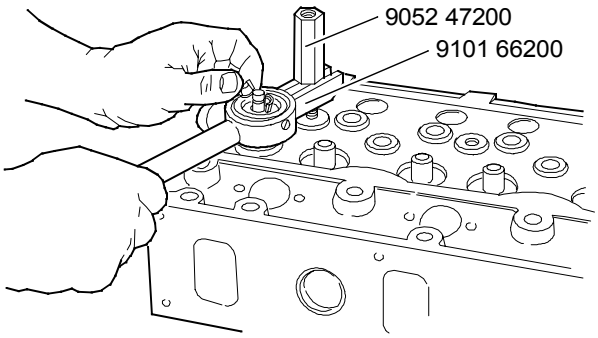

1. Install the counter screw 9052 47200 for the valve spring installing tool in the rocker arm cover bolt. On the 33-, 66-, 74- and 84-engines there is not a screw stud at the valves for the centre cylinder. A bolt of suitable length should be used instead.

2. Compress the valve springs using lever 9101 66200. Remove the valve cotters, spring guide and spring. Remove the valves.

C. Checking cylinder head

1. Remove the soot from the exhaust ports, clean the sealing surfaces and wash the cylinder head.

2. Check for cracks and other damage.

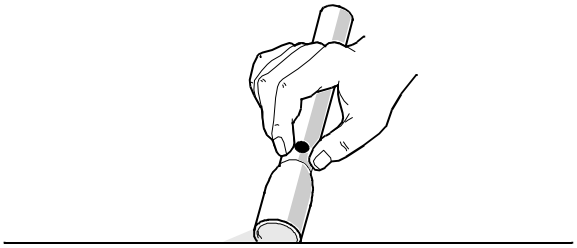

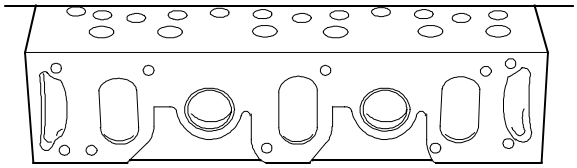

3. Check the flatness of the cylinder head by using a straight edge. An uneven or warped surface should be surface ground. The height of the cylinder head, after grinding, should not be less than **104,00 mm**. The valve disc depth from the cylinder head surface should be **0,60 mm** for the exhaust valves and **0,70 mm** for the inlet valves.

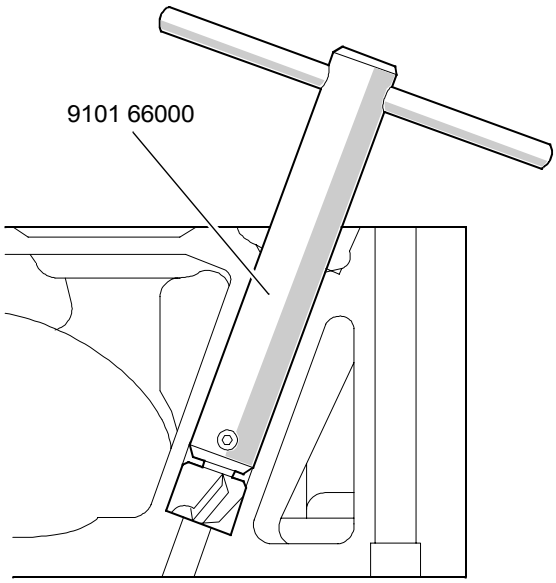

4. Straighten and clean the injector location seat in the cylinder head with cutter 9101 66000.

https://truckmanualshub.com/

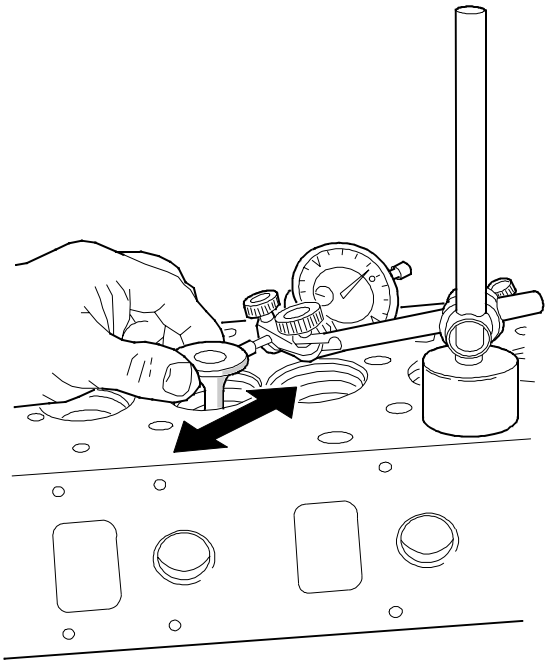

5. Measure the clearance between the valve stem and the valve guide with a dial gauge. Lift the valve so that the valve head is **15 mm** from the face of the cylinder head, and measure the clearance. It must not be greater than **0,30 mm** for the inlet valves and **0,35 mm** for the exhaust valves. In order to establish the valve guide wear, a new valve should be used when measuring.

D. Changing valve guides

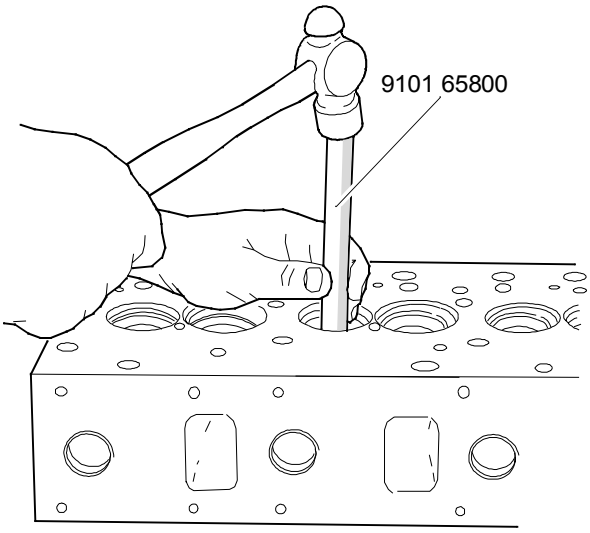

1. Press or knock out the old guides using drift 9101 65800. Clean the valve guide locations.

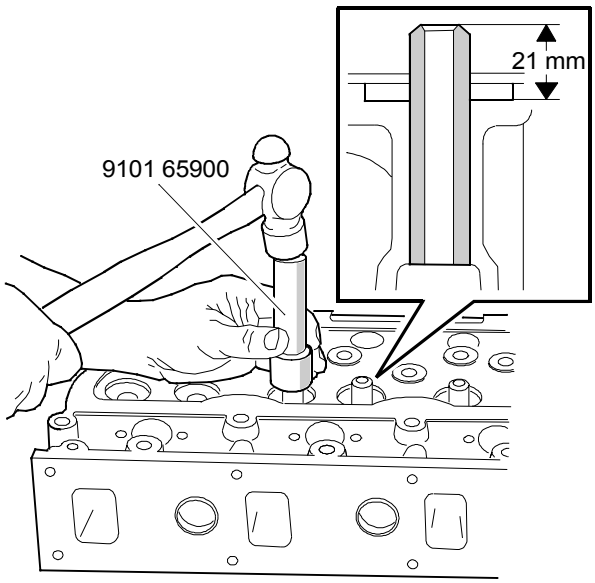

2. Lubricate the outside of the new guides and fit them using drift 9101 65900, which ensures the correct fitting height (**21 mm** over the spring face).

3. The guides are the same for the inlet and exhaust valves. Ensure that the steepest chamfer on the guide, faces the valve head. Check that the valves do not bind in the guides.

E. Machining valve seat

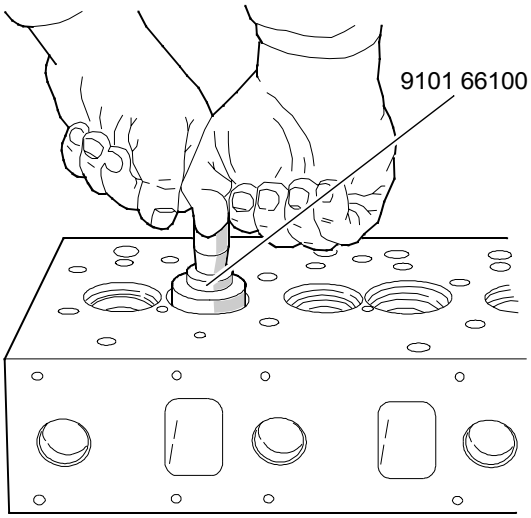

Machine the damaged valve seat with milling cutter. If the width of the seat exceeds **2,3 mm** in exhaust and **3,7 mm** in intake, it should be reduced primarily at the outer edge.

The valve seat angle is **45°+20'** for exhaust valve and **35°+20'** for inlet valve.

https://truckmanualshub.com/

F. Changing valve seat rings

Exhaust valves are fitted with separate valve seat rings. Also the engines with high output are equipped with separate inlet valve seats. If the sealing surface is damaged so badly that it cannot be repaired with machining, the seat ring should be changed.

1. Grind the valve head on a discarded valve so that it sits down in the valve seat. Fit the valve and weld it in place in the seat. Cool with water.

2. Turn the cylinder head over and knock out the valve and seat.

Exhaust

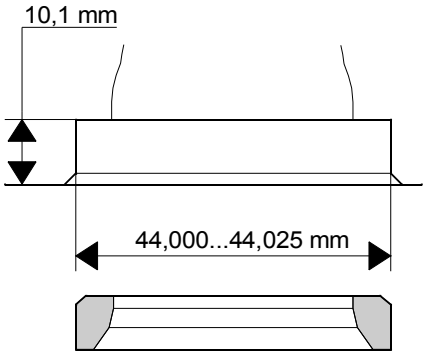

Inlet

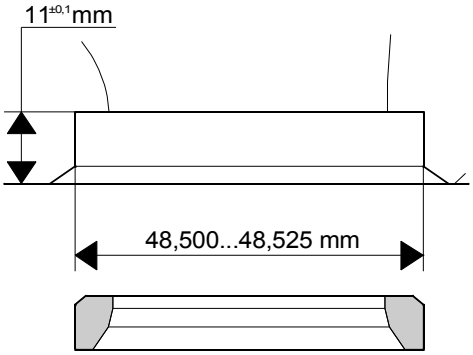

3. Clean the valve seat location. Cool the new seat ring in liquid nitrogen until it stops bubbling, or alternatively place it in dry ice.

4. Fit the seat with a suitable drift. Machine the seat.

Note! Where necessary, standard size seats can be replaced by inserts with a larger outer diameter. See "**Technical data**", point "**Cylinder head**".

The inlet valve seat machined direct on the cylinder head, can be provided with a separate valve seat ring, order no. 8366 47936. Machine the seat insert location on the cylinder head (see picture above). Fit the insert like a seat of the exhaust valve.

G. Grinding valves

In order to ensure that there is a proper seal around the valves, there is a difference in the sealing surface angles. Thus there is a very narrow sealing surface which seals effectively even after prolonged running.

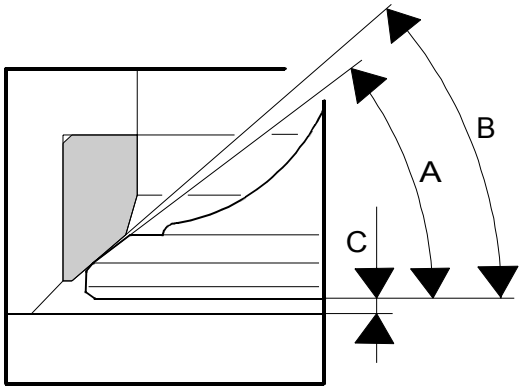

	A	B	C (mm)
Inlet	$35^{\circ -20'}$	$35^{\circ +20'}$	$0{,}7^{\pm 0{,}05}$ (max. 2,20)
Exhaust	$45^{\circ -20'}$	$45^{\circ +20'}$	$0{,}6^{\pm 0{,}05}$ (max. 2,20)

1. Grind the damaged valve disc with a valve refacer. Adjust angles to **45°-20'** for exhaust valves and **35°-20'** for inlet valves.

2. If the edge of the valve head is less than **1,5 mm** after it has been ground, or if the valve stem is bent, the valve should be discarded.

3. If necessary, grind the end of the valve stem.

4. Lap the valves with lapping paste and check the contact surface with marking paint.

5. Clean the cylinder head and valves of any remaining lapping paste.

H. Fitting valves

1. Check the valve springs for straightness, length and tension using a spring tester. See "**Technical data**", point "**Valves, rockers and tappets**".

2. Lubricate the valve stems and fit the valves in the correct order in the cylinder.

3. Fit the springs, spring guides and valve keepers with the aid of a lever for compressing valve springs, 9101 66200.

4. Tap the end of the valve stems lightly after fitting the valve in order to ensure that they are secure.

https://truckmanualshub.com/

I. Fitting cylinder head

1. Measure the length of the cylinder head bolts. Compare with dimensions shown in figure below. Change too long bolts.

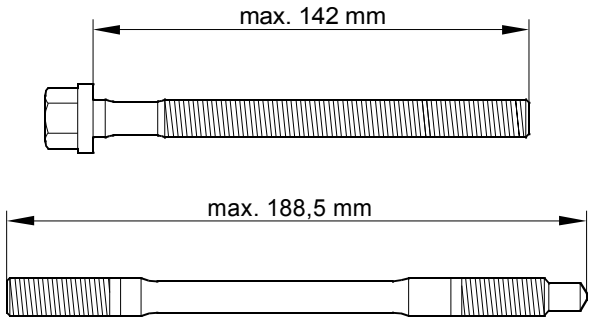

2. Screw the cylinder head stud bolts in to the cylinder block to a torque of **30 Nm**. Fit the valve tappets if removed.

3. Check that the sealing surfaces are clean and fit the cylinder head gasket(s) and the cylinder head(s). Ensure that on the six cylinder engines both cylinder heads are parallel by fastening lightly the exhaust manifold before tightening the cylinder head bolts (the exhaust manifold can damage, if the heads are not parallel). Clean and lubricate and fit the bolts.

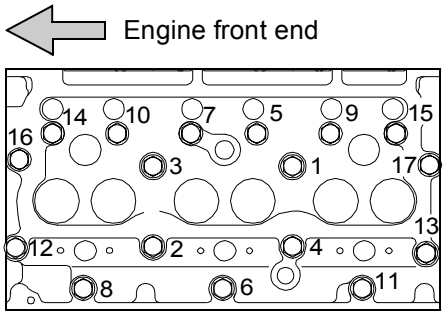

33, 66, 74, 84

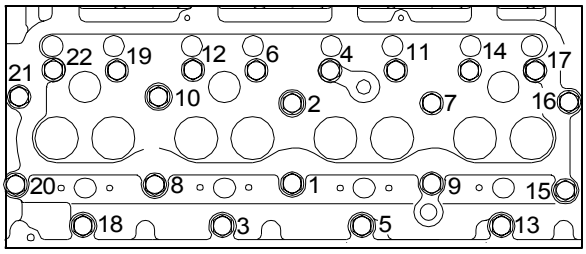

44

4. Pictures above show the correct tightening order of the cylinder head bolts. The order has also been marked on the cylinder heads.

5. Tighten the cylinder head bolts progressively as follows:

1. First tightening to **80 Nm**
2. Tightening of **90°**
3. Tightening again of **90°**.

6. Adjust the valve clearances (see instruction **4 C**).

7. Run the engine with a light load to the normal running temperature (~75°C).

8. Tighten the bolts **60°** and adjust the valve clearances.

Note! After this the cylinder head does not need retightening.

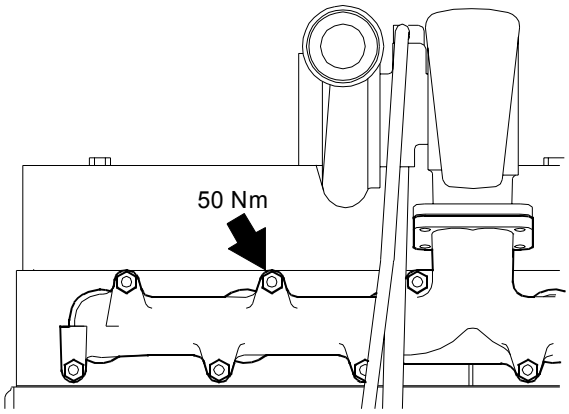

Tighten the exhaust manifold nuts to **50 Nm**. **Do not overtighten!**

https://truckmanualshub.com/

4. VALVE MECHANISM

A. Reconditioning valve mechanism

1. Check the valve tappets, especially the contact surface against the camshaft. Worn or damaged tappets should be discarded.

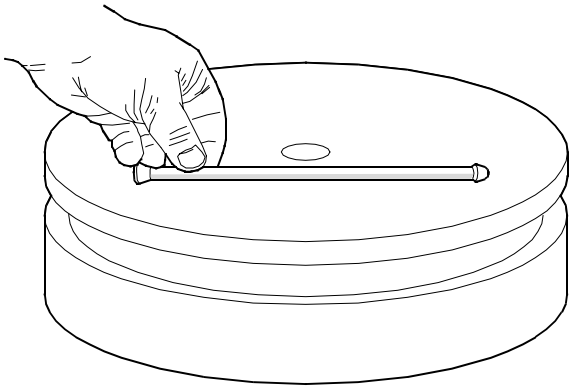

2. Check the straightness of the push rods by rolling them on a surface table. Check also the spherical surfaces at the ends.

3. Dismantle and clean the rocker arm mechanism. Check the shaft for wear and that the oilways are clean.

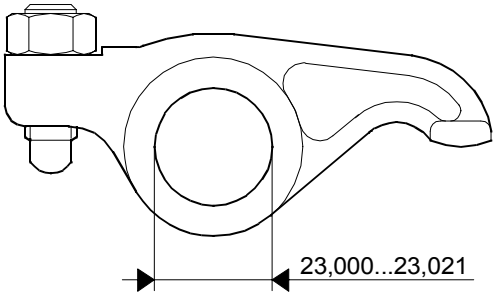

4. Check diameter of the rocker arm bore, **23,000...23,021 mm**. Change the worn or damaged rocker arm. Where necessary grind the rocker arm valve contact surface to the correct shape. Do not grind more than necessary as the hardened layer is thin.

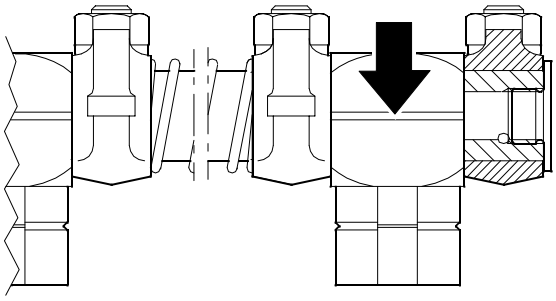

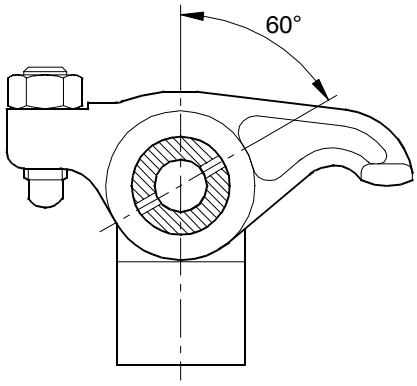

5. Fit the plug to the other end of the rocker arm shaft. Lubricate the shaft and fit various parts in a correct order. Note the correct position of the shaft and the bearing brackets. The split side of the bracket and the shaft oil holes must be turned to the valve side (see pictures above). Fit the other end plug.

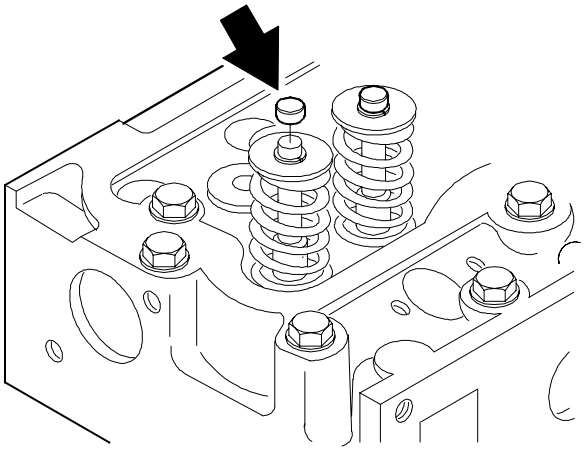

Note! The valves can be fitted with a separate caps.

B. Changing camshaft / camshaft gear

1. Remove the valve cover. Remove the rocker arm mechanism.

2. Remove the radiator, cooling fan, alternator and the V-belt.

3. Remove the V-belt pulley, the crankshaft nut and the hub (with damper).

84-engines, remove the belt pulley and damper. Slacken the crankshaft nut. **Do not remove it!** Remove the hub using puller 9104 53300. Take off the puller, open the nut and remove the hub.

4. Remove the timing gear casing cover (engine front cover).

https://truckmanualshub.com/

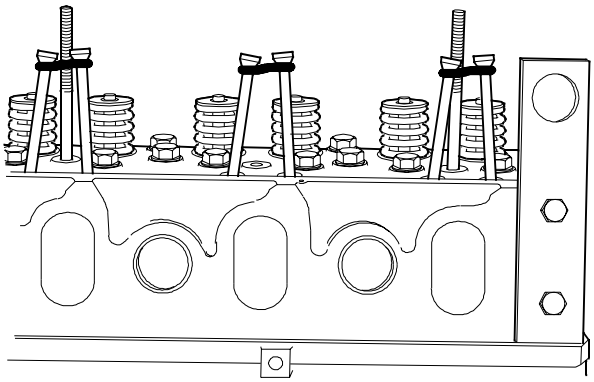

5. Connect the push rods in pairs, using o-rings or elastic bands to prevent them from falling through.

Note! Do not connect the push rods too tightly as this might cause them to bend or snap.

6. Crank the engine until the aligning marks on the idler gear and camshaft gear are facing each other. Extract the camshaft.

7. Separate the camshaft from the gear wheel using a press or suitable drift.

8. Clean the parts which are to be refitted.

9. Fit the key in its groove. Heat the camshaft gear to **200°C** in an oven and fit it on the shaft.

10. Lubricate bearing surfaces and lobes and insert the shaft in the cylinder block. Ensure that the aligning marks on the gears agree.

11. Fit the timing gear casing cover, the hub, damper and crankshaft V-belt pulley.

12. Free the push rods and fit the rocker arm mechanism. Adjust the valves. Fit the valve cover.

13. Fit the other removed parts.

C. Adjusting valves

The valve clearance, which can be adjusted on a hot or cold engine, is **0,35 mm** for both inlet and exhaust valves. The clearance is adjusted when the respective piston is at T.D.C. in the compression stroke. The valves for the different cylinders are adjusted in the same sequence as the order of injection.

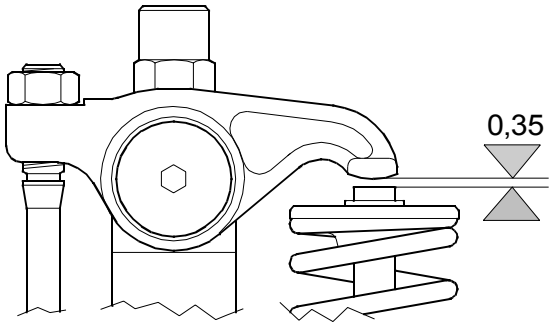

Adjusting

- Loosen the locknut on the adjusting screw.
- Check the clearance with a feeler gauge and adjust to the correct clearance by turning the adjusting screw.
- Tighten the locknut and again check that the clearance is correct.

33-engines

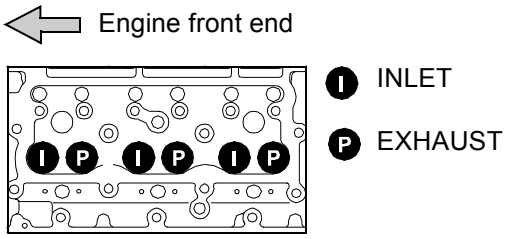

33

Check the valve clearances in the injection order of the engine. Injection order is 1 - 2 - 3.

- Check valves in the 1st cylinder, when the exhaust valve of no. 3 cylinder is completely open (valve no. 6).
- Check valves in the 2nd cylinder, when the exhaust valve of no. 1 cylinder is completely open (valve no. 2).
- Check valves in the 3rd cylinder, when the exhaust valve of no. 2 cylinder is completely open (valve no. 4).

https://truckmanualshub.com/

44-engines

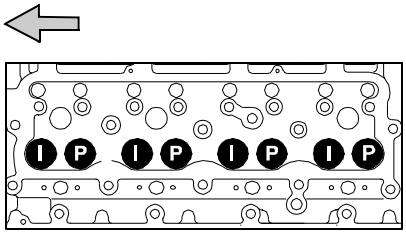

44

- Rotate the crankshaft in the running direction until the valves in the 4th cylinder are rocking (exhaust closes, inlet opens). Check the valve clearance of the 1st cylinder.
- Rotate the crankshaft by 1/2 of a turn in the running direction so that valves in the 3rd cylinder are rocking. Check valves in the 2nd cylinder.
- Continue according to the order of injection:

Injection order	1 - 2 - 4 - 3
Valves rock in cyl. no.	4 - 3 - 1 - 2

66-, 74- and 84-engines

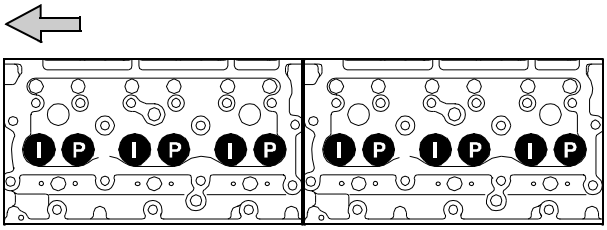

66, 74, 84

- Rotate the crankshaft in the running direction until the valves in the 6th cylinder are rocking (exhaust closes, inlet opens). Check the valve clearance of the 1st cylinder.
- Rotate the crankshaft by 1/3 of a turn in the running direction so that valves in the 2nd cylinder are rocking. Check valves in the 5th cylinder.
- Continue according to the order of injection:

Injection order	1 - 5 - 3 - 6 - 2 - 4
Valves rock in cyl. no.	6 - 2 - 4 - 1 - 5 - 3

https://truckmanualshub.com/

https://truckmanualshub.com/

5. CRANKSHAFT

A. Removing crankshaft

1. Remove the oil sump.

2. Disconnect the balancing unit lubricating oil pipe from the cylinder block and unscrew the balancing unit fixing bolts. Remove the balancing unit and the lubricating oil pipe (only 44-engines).

3. Unscrew the lubricating oil pump pressure pipe fixing screws from the cylinder block. Remove the oil pump and the suction and pressure pipes.

4. Remove the flywheel and the flywheel housing.

5. Detach the belt pulley and the hub from the crankshaft front end. Remove timing gear housing. (see instruction **9 A**).

6. Remove the connecting rod bearing caps and push the connecting rods out of the way of the crankshaft.

7. Remove the main bearing caps and lift out the crankshaft.

B. Checking crankshaft

1. Clean the crankshaft. Do not forget the oilways.

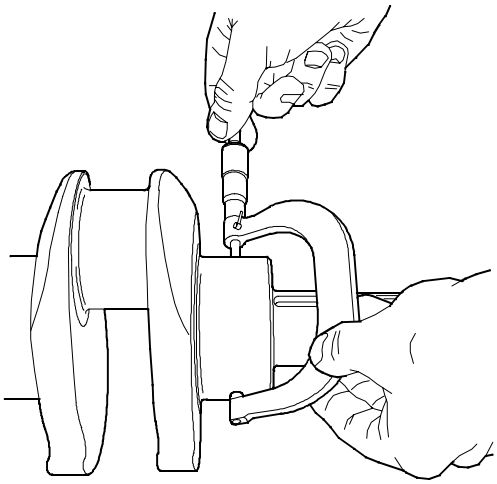

2. Measure the journal wear in several points. Out-of-round, taper or other wear must not exceed **0,03 mm**.

3. Refit the bearing caps with new bearing shells and tighten them to the correct torque. Measure the I.D. with a dial gauge which has been zeroed to the dimensions obtained in point 2. With this method the indicator shows the actual bearing clearance. Measure in several points in case the worn bearing housing is not round.

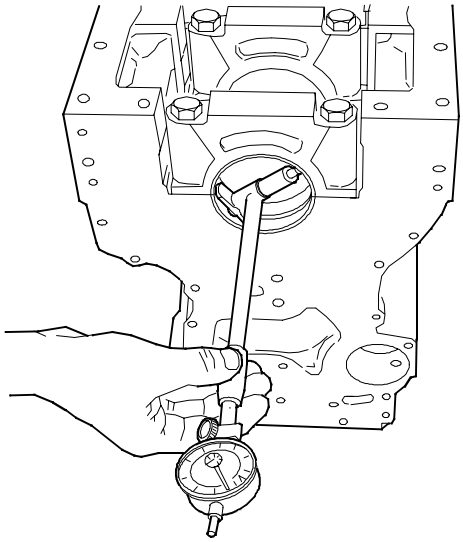

4. If the bearing clearance exceeds **0,18 mm** for main bearings or **0,14 mm** for connecting rod big-end bearings with new bearing shells, the bearing journals on the crankshaft should be ground. Refer to the specifications for the relevant correct undersize and the corresponding bearings, see "**Technical data**", point "**Crankshaft**".

Note! When grinding note that the journal edges must remain round.

Note! If needed, also the main bearing can be fitted with outer diameter 1,0 mm oversize and inner diameter 0,5 mm undersize. Order no. is 8361 40950. The main bearing housing is machined to 92,000...92,025 mm and crankshaft to 84,485...84,520 mm. (Special bearings not available for 84-engines.)

C. Changing crankshaft gears

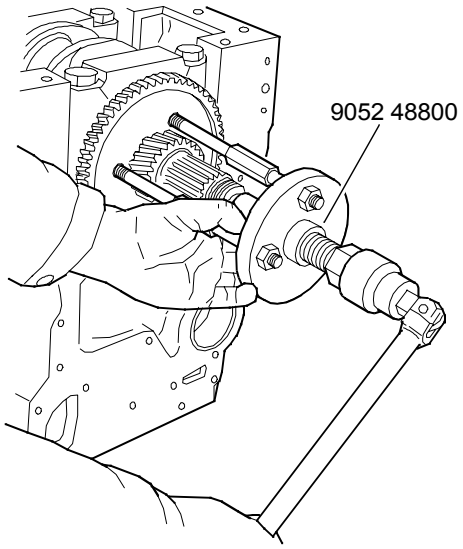

1. Apply puller 9052 48800 for the crankshaft gears and pull off both gears.

https://truckmanualshub.com/

84-engines, break the crankshaft gears using e.g. a grinder. Grind the gears enough. Hit the gears apart with a chisel. Do not damage the crankshaft!

2. Clean the seat on the crankshaft with, for example, a wire brush.

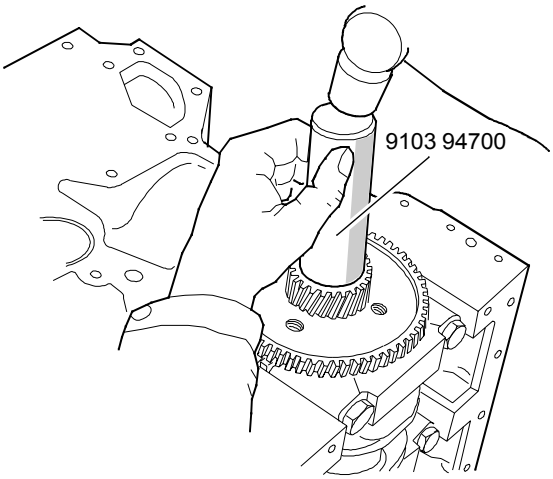

3. Heat the new gears to **220...250°C**. Tap them onto the shaft with drift 9103 94700. Note the position of the key and ensure that the aligning marks on the front gear are visible. Leave it to cool.

D. Fitting crankshaft

1. Clean the oilways, bearing shells and bearing locations. Check that the crankshaft is clean.

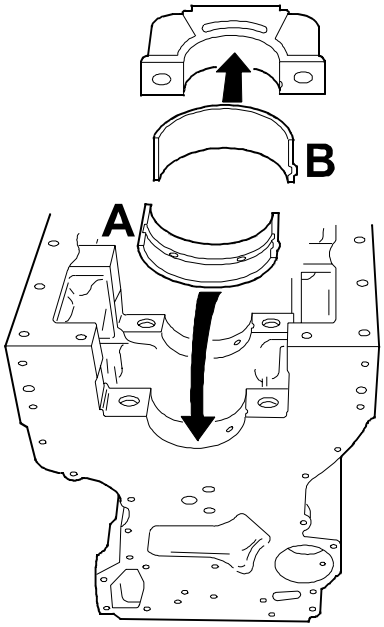

2. Assembly the bearing with oilholes/groove (**A**) to the cylinder block and the bearing with no hole (**B**) to the bearing cap. Ensure that the bearing shell clamping claws fit into their notches and that the shells to be fitted in the cylinder block have a hole coinciding with the oil port.

3. Lubricate the bearing surfaces and fit the crankshaft. Fit the crankshaft thrust bearings with the lubricating grooves facing the crankshaft.

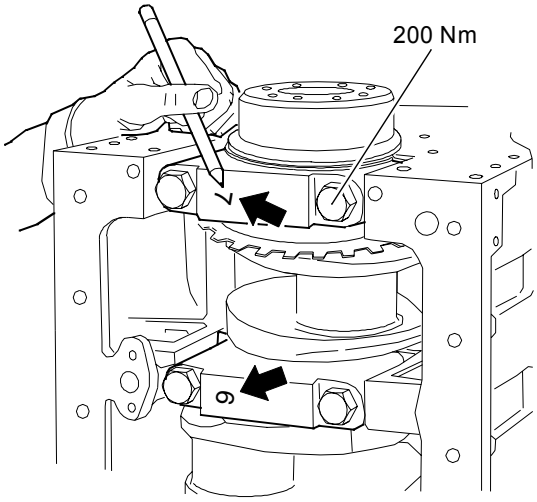

4. Fit the main bearing caps according to their numbering (bearing lock in the block and in the cap are on the same side), the rear with thrust bearings provided with guide lugs. Lubricate the bolts and tighten them to **200 Nm**.

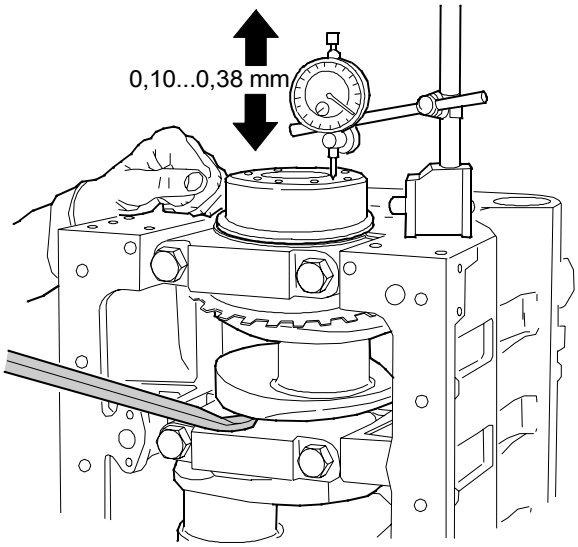

5. Check that the crankshaft can rotate without binding. Check the end float using a dial gauge. The correct end float is **0,10...0,38 mm**. If the end float is too large, oversize thrust bearings should be fitted.

Note! Bearing shells should never be reamed or machined in any other way, nor should the sides of the bearing caps be filed

Note! 33-engines, tightening torque of screws of crankshaft counterweight is **160 Nm**. Apply locking fluid (e.g. Loctite 2701) on the screw threads.

https://truckmanualshub.com/

E. Crankshaft hub piece

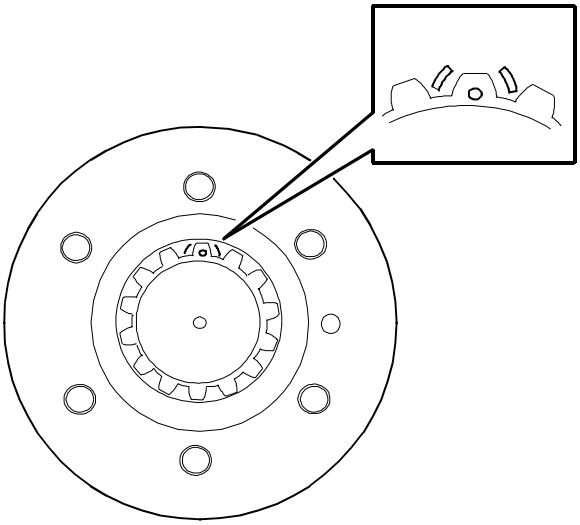

When fitting the hub piece to the crankshaft front end note the correct position of the hub (engines with the installation mark of the injection pump on the crankshaft pulley/vibration damper). The hub piece has an installation mark **-** on two teeth and the corresponding installation mark **o** of the crankshaft is on one tooth.

F. Checking element of the rubber damper

44- and 66-engines

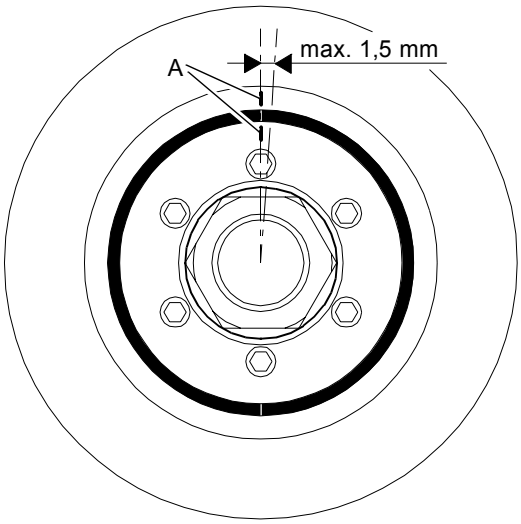

1. Check the alignment marks (A) on both sides of the rubber element. If the difference is more than **1,5 mm**, change the damper for a new one.

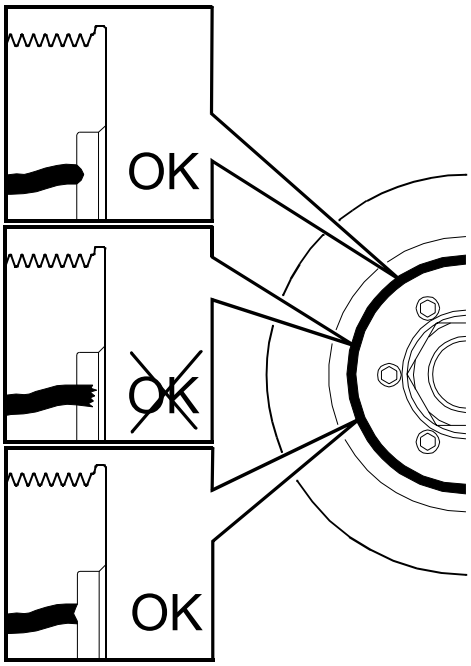

2. Check also the condition of the rubber element. If rubber pieces have been loosened from the element, rubber has been pressed to the depth of more than **3,5 mm** or the outer circumference is slack or it moves in the direction of the shaft, change the damper.

G. Viscose type vibration damper

66-, 74- and 84-engines

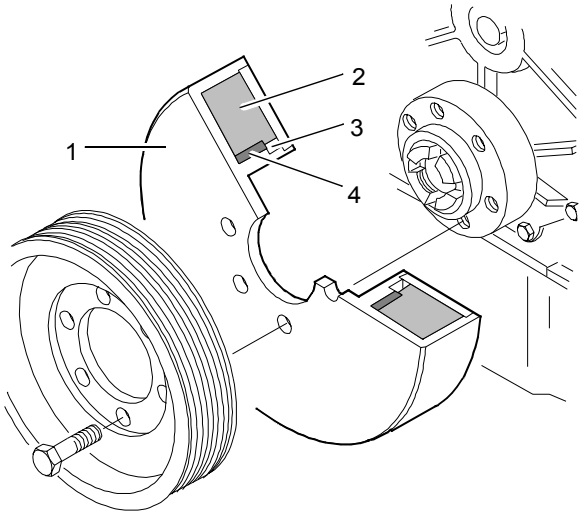

1. Housing
2. Damper mass
3. Liquid cavity
4. Bushing

In the 74- and 84-engines and some 66-engine versions there is a vibration damper of so-called viscose type. Inside the damper there is a housing filled with stiff silicone oil in where the damping substance is situated with very small tolerances.

https://truckmanualshub.com/

Note! Even a small dent makes the vibration damper inoperative. Do not remove it by turning forcibly and be careful not to damage it when it is loose. If you detect a dent on the outer surface, do not install the damper back in the engine.

Note! Note! Make the installation mark of the injection pump on the vibration damper with an electric pen (do not tap).

H. Changing crankshaft pulley / vibration damper

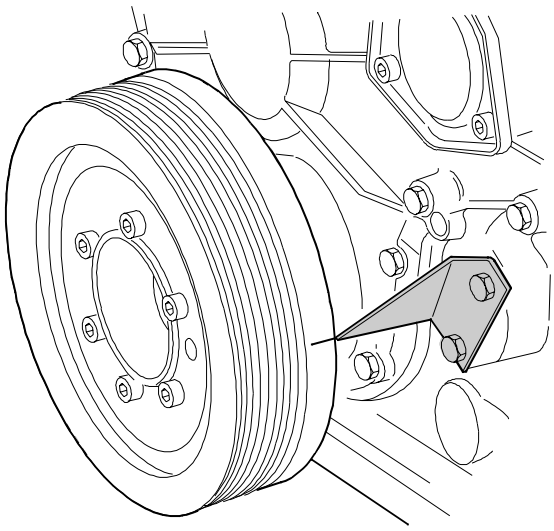

1. Loosen the alternator fixing screws and remove the v-belt.

2. Open the bolts of the pulley/vibration damper and remove the parts. The pulley/vibration damper is positioned to the crankshaft hub with a tension pin.

3. Fix the new vibration damper/pulley on the crankshaft. Tap the tension pin in its place and tighten the fixing screws to a torque of **30 Nm**.

Note! Vibration dampers (pulleys) delivered as spare parts do not have the installation mark of the injection pump. Make the marking on the new damper in connection with installation.

4. Rotate the crankshaft until the piston of the 1st cylinder reaches its top dead centre. Drop cyl. no. 1 inlet valve down against the piston head. Set the dial gauge on top of the valve stem end and zero it at the piston top dead centre. Then rotate the crankshaft opposite to running direction until dial gauge shows about 15 mm below TDC. After that rotate the crankshaft slowly to running direction until the dial gauge shows the figure corresponding injection timing (see table below).

5. Make the installation mark of the injection pump on the vibration damper/pulley with an electric pen (do not tap).

Piston distance (h) from top dead centre vs. crank angle (α) with different injection pumps.

Engine type	Bosch VP 30		Bosch VP 44	
	α	**h** (mm)	α	**h** (mm)
44	30°	10,213		
66	30°	10,213		
74	30°	11,692	26°	8,865
84			28°	10,997

https://truckmanualshub.com/

6. CONNECTING RODS AND PISTONS

A. Removing pistons together with connecting rods

1. Remove the oil sump and the oil inlet and pressure pipes.

2. Remove the cylinder head.

3. Scrape off the possible soot in the cylinder liner. If the turning edge is clearly marked, smooth it down carefully with a scraper.

4. Remove the big-end bearing caps and bearing shells. Place the shells in order if they are to be re-used.

5. Push up the piston and connecting rod with the shaft of a hammer or similar wooden tool.

6. Remove the piston pin snap rings. Push out the pin.

Note! If the piston pin does not move under thumb pressure the piston should be heated to **100°C**.

B. Changing connecting rod bearings

Piston pin bushing

1. Clean the connecting rod and bearing shells.

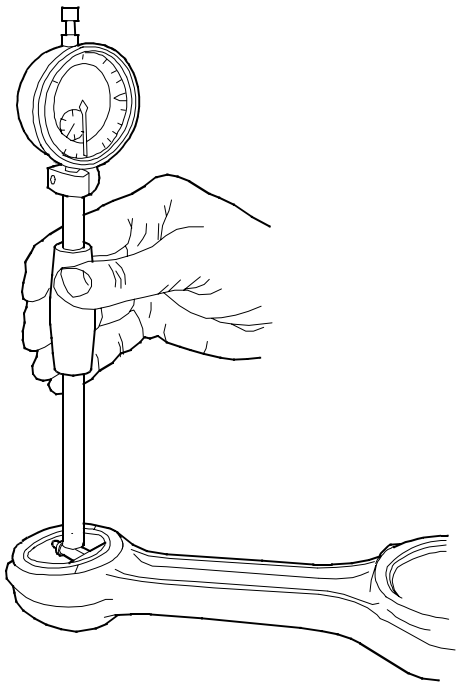

2. Measure the I.D. of the piston pin bushing using a cylinder gauge.

3. If the piston pin bushing is worn, it should be driven out using a suitable drift

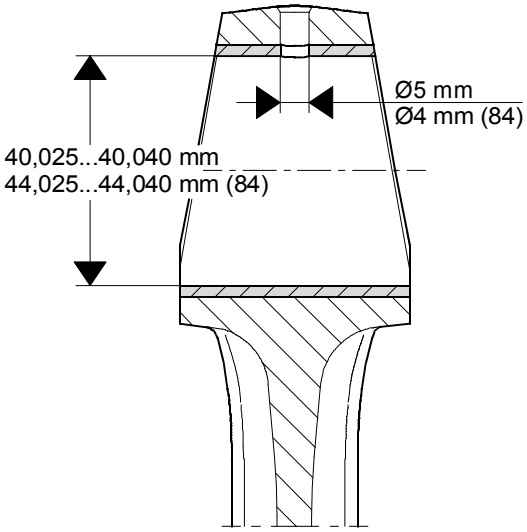

4. Press the new bush in its place. Ensure that the oil hole in the bush coincides with the respective hole in the connecting rod. After fitting drill oil hole (84-engines) and ream the bush to attain its correct diameter.

Note! The connecting rod can, if needed, be fitted with a 0,5 mm oversize bushing. See "**Technical data**", point "**Connecting rod**".

Big end bearing

1. Fit the bearing shells together and tighten the screws.

2. Measure the I.D. using a cylinder gauge which has been zeroed to the diameter of the respective bearing journal. If the clearance exceeds **0,14 mm** with new bearing shells, the big end journals require grinding. Refer to the specifications for the correct undersize and the corresponding bearing.

Note! Ensure that the radii at the end of the bearing journals is not altered when grinding.

C. Checking connecting rod

The connecting rod is checked in a special fixture, intended for the purpose (e.g. Carl Larsson). See "**Technical data**", point "**Connecting rod**".

https://truckmanualshub.com/

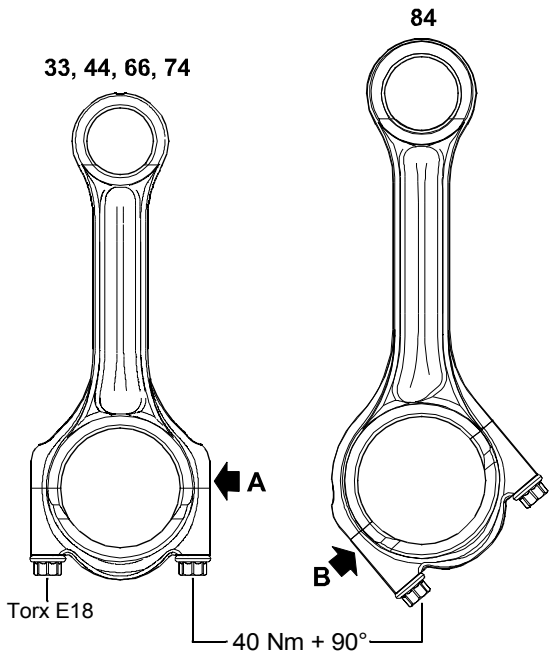

Note! Always change the screws when opened.

The connecting rods are divided into weight classes with intervals of **20 g**. The weight class (a letter) is stamped on the side face of the connecting rod. All the connecting rods in one engine should be of the same weight class, that is to say the greatest permissible weight difference is **20 g**.

The letters show the weight classes as follows:

33-, 44-, 66- and 74-engines

Letter (A)	Order no.	Weight
F	8366 66430	1935 - 1954 g
V	8366 66431	1955 - 1974 g
X	8366 66432	1975 - 1994 g
Y	8366 66433	1995 - 2014 g
W	8366 66434	2015 - 2034 g
Z	8366 66435	2035 - 2054 g
G	8366 66436	2055 - 2074 g

84-engines

Letter (B)	Order no.	Weight
E	8368 64101	2230 - 2249 g
F	8368 64102	2250 - 2269 g
G	8368 64103	2270 - 2289 g
H	8368 64104	2290 - 2309 g
I	8368 64105	2310 - 2329 g
J	8368 64106	2330 - 2349 g
K	8368 64107	2350 - 2369 g

The order number of the connecting rod kits as spare part are as follows:

Engine type	Number of cyl.	Order no.
33	3	8366 40968
44	4	8367 40859
66, 74	6	8368 40928
84	6	8363 40948

D. Changing piston rings

1. Remove the piston rings with piston ring pliers 9052 46900. Do not open the rings more than necessary. If the rings are to be used again ensure that they are fitted in the same groove.

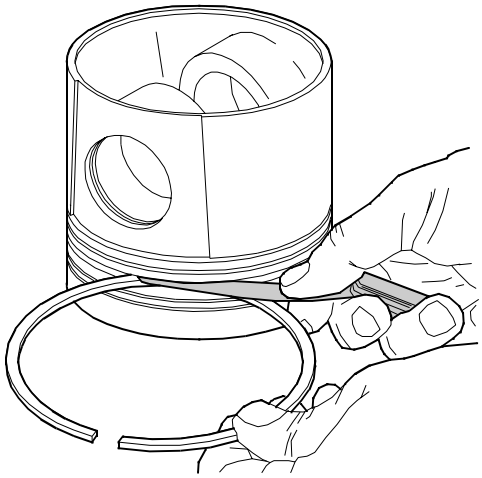

2. Clean the piston ring grooves and measure the piston ring clearance, which must not exceed **0,15 mm**. Determine whether too large a clearance is due to worn rings or a worn groove. Change worn parts.

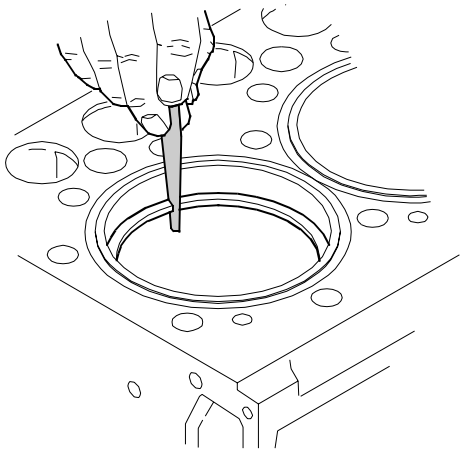

3. Measure the piston ring gap by pushing one piston ring at a time into the cylinder bore. The piston ring gap must not exceed **1 mm** on 1. and 3. piston rings and **1,5 mm** (84-engines, **1,3 mm**) on 2. piston ring.

https://truckmanualshub.com/

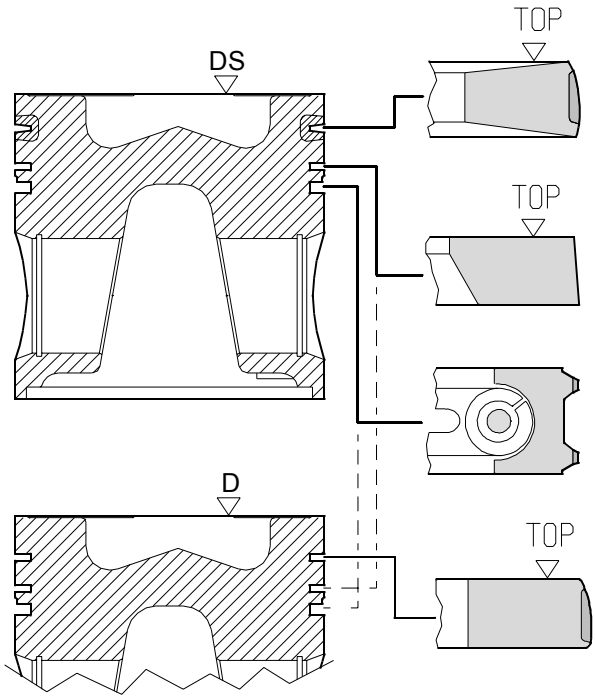

4. Fit the piston rings on the piston using the piston ring pliers. Ensure that the rings are fitted in the correct groove and that "TOP", or the manufacturer's designation, faces upwards.

E. Checking pistons

Check the condition of the pistons and piston pins. Pay special attention to possible cracks on the edge of the combustion chamber and on the upper edge of the piston pin hole. Measure the diameter of the piston at the point shown in the figure below. Renew a piston if needed.

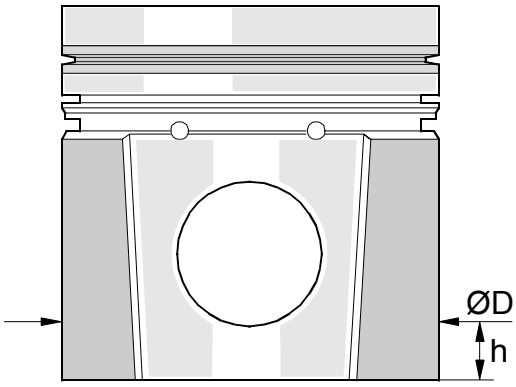

Engine	D (mm)	h (mm)
33, 44, 66	107,873...107,887	17,0
74	107,893...107,907	19,0
84	110,863...110,877	15,0

F. Fitting piston pin

1. Place the connecting rod inside the piston and push the piston pin into place.

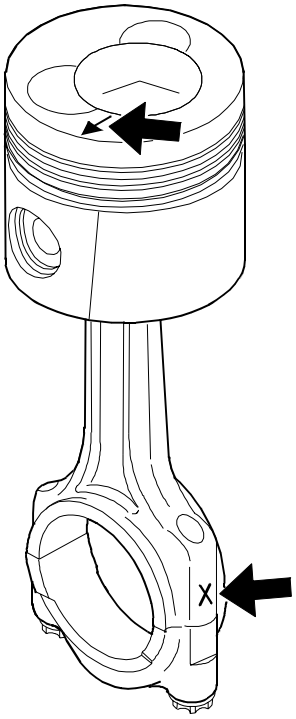

The combustion chamber and the weight class letter should be on same side.

Note! 84-engines, the combustion chamber and the weight class letter should be on opposite sides.

2. Fit the piston pin circlips. Ensure the circlips are pressed correctly into the grooves. The circlip ends must point upwards.

G. Fitting piston together with connecting rod.

1. Check that the bearing locations are clean and place the bearing shells in the connecting rod and bearing cap. Note the position of the bearing shells.

2. Lubricate piston, rings and cylinder bore. Ensure that the piston ring gaps are spread around the piston.

https://truckmanualshub.com/

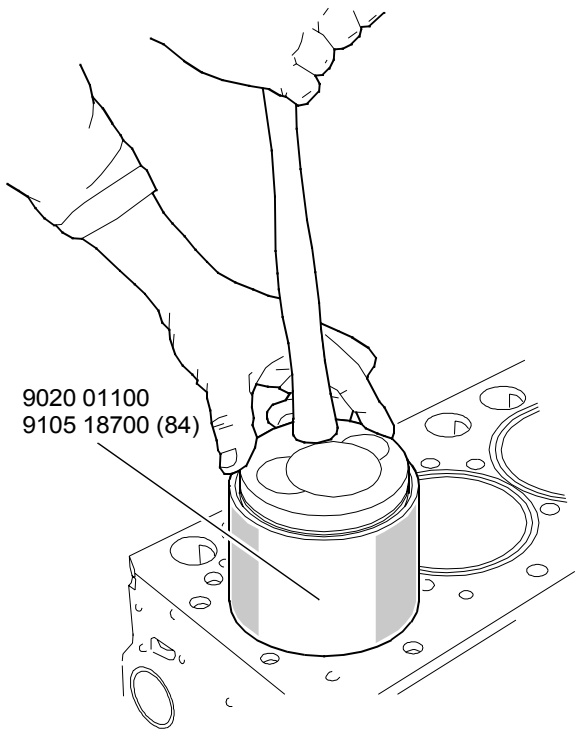

3. Use a piston ring strap or preferably a fitting tool 9020 01100 or 9105 18700 (84-engines). Fit the piston with the connecting rod so that the combustion chamber and the fuel injector are on the same side (an arrow on the piston must point forward).

4. Lubricate the big-end bearing journal and bearing shells, and push the piston down. Fit the bearing cap so that the notches for the guide lugs are in the same side. Tighten the connecting rod screws to **40 Nm + 90°**.

5. Check that the connecting rod has sufficient end float on the big-end bearing journal.

https://truckmanualshub.com/

7. COUNTERBALANCE (44-engines)

A. Removing and disassembling counterbalance unit

1. Remove the oil sump

2. Disconnect the lubricating oil pipe of the counterbalance unit.

3. Remove the counterbalance unit. Take care of any shims.

4. Loosen the locking screws and press out the shafts in the direction of the locking screws. Remove the counterweights and thrust washers.

5. Clean all parts.

B. Reconditioning counterbalance unit

Check the shafts, gear wheels and bushings for wear and damage.

1. If one of the gear wheels is damaged, change both counter weights as a complete unit. The gear wheels are not available separately as a spare part.

2. Remove, if necessary, the old bearing bushings with a suitable drift. Before removing them, mark the position of the bushing oil groove on the counter weigh. Press in new bushings in the correct position. After fitting the bushings should be reamed to a correct dimension, see Specifications.

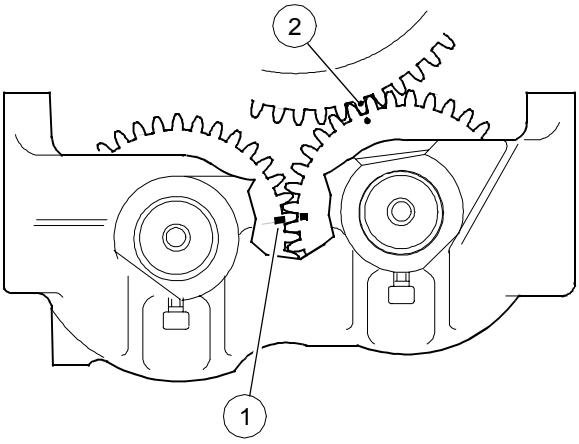

1. Synchronisation marking (notch)
2. Marking against crankshaft (punch mark)

3. Place the weights in the body, observing the notch markings. The gear wheel with the punch mark runs against the crankshaft and should therefore be placed highest. Insert the shafts, remembering the thrust bearings. Apply thread lock fluid (e.g. Loctite 270) to the locking screws, and lock the shafts.

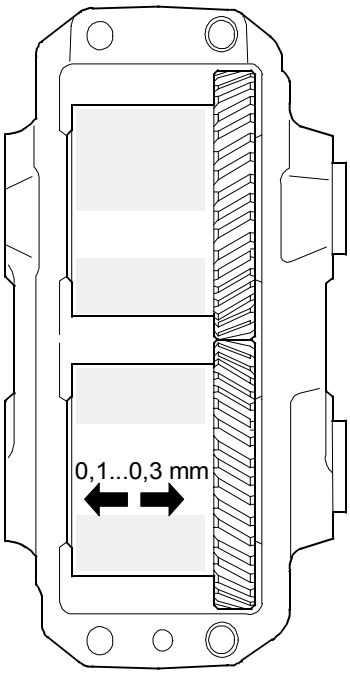

4. Check that the tooth backlash is **0,05...0,25 mm** and that the end float is **0,1...0,3 mm**.

C. Fitting counterbalance unit

1. Fit the tension pins to the cylinder block.

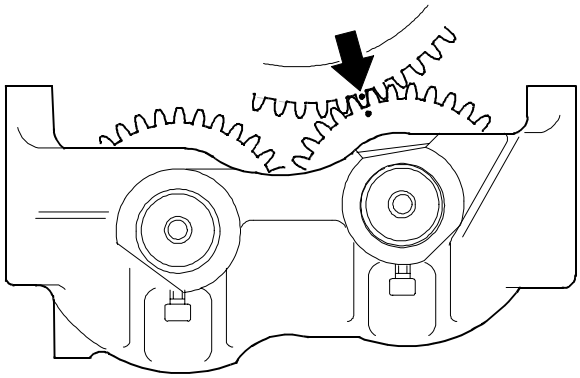

2. Turn the crankshaft and weights so that the markings agree, and lift the unit into place.

3. Tighten the screws to **60 Nm**. Check that the tooth backlash between the crankshaft and counterweight is **0,1...0,3 mm**. The backlash can be increased by placing shims 0,2 mm thick (order no. 8361 19920) between the cylinder block and balancer unit body. One shim (0,2 mm) changes tooth backlash about 0,07 mm.

4. Fit the lubricating oil pipe, using new seals.

5. Fit the oil sump.

https://truckmanualshub.com/

D. Changing crankshaft gear rim

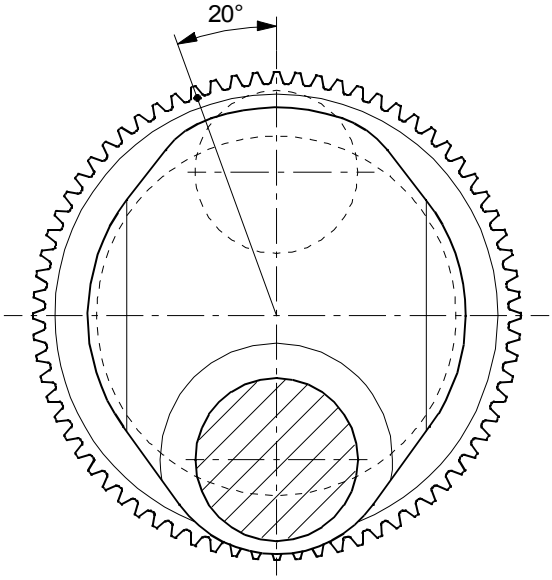

1. Mark the position of the gear rim on the shaft.

2. Heat the gear rim with a welding torch and drive it off using a suitable drift.

3. Heat the new gear rim to max. **250°C**. Fit the gear rim with the chamfer facing the crankshaft flange, and with the teeth according to markings or according to figure above. Tap the gear rim down and leave it to cool.

Note! The picture above shows a rear view of the crankshaft and no. 2 cylinder big end bearing journal.

https://truckmanualshub.com/

8. FLYWHEEL

A. Changing starter ring gear on flywheel

If the ring gear is worn, change it with a new one. The ring gear cannot be turned around because its teeth are chamfered and hardened on the starter motor side.

1. Remove the old starter ring by tapping it at various points with a drift. Clean the flywheel contact face with a steel-wire brush.

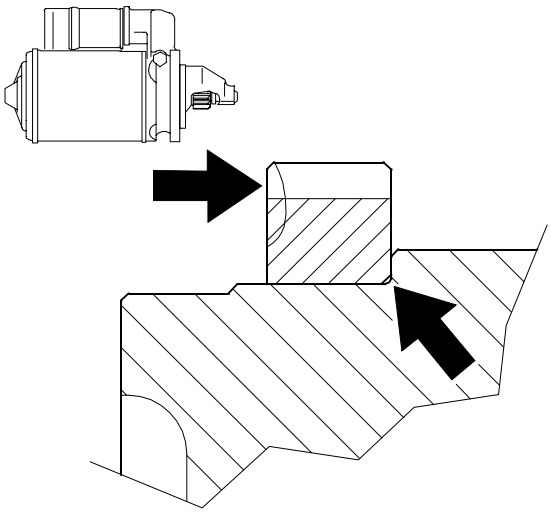

2. Warm the ring gear to the temperature of **150...200°C**. Fit the ring gear with the inner diameter chamfering turned against the flywheel and the teeth chamfering against the starter motor.

3. Allow the ring gear to cool freely without using any coolant.

B. Fitting flywheel

1. Clean the contact surfaces on the crankshaft rear flange and on the flywheel.

2. Fasten the flywheel to the crankshaft rear end. As a guide pins can be used suitable studs (2 pcs) which are screwed in to the flywheel fixing bolt holes.

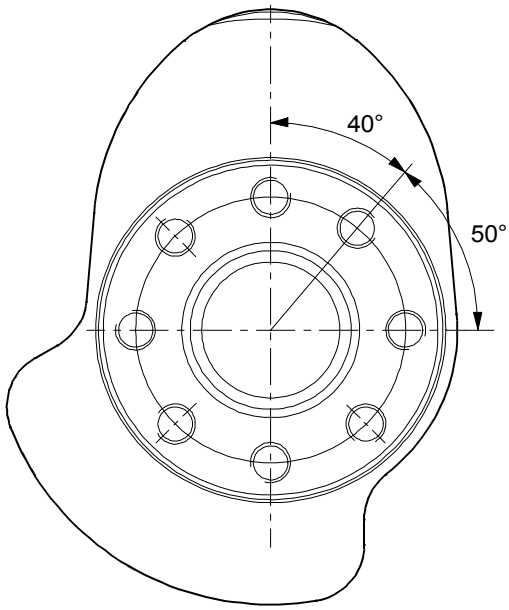

Note! 84-engines, the flywheel fixing bolt holes are unsymmetrical.

3. Tighten the flywheel retaining screws evenly to a torque of **150 Nm** (**200 Nm**, 84-engines).

https://truckmanualshub.com/

https://truckmanualshub.com/

9. TIMING GEAR ASSEMBLY

33-, 44-, 66- and 74-engines

A. Removing timing gear casing

As the timing gear casing bottom face forms a part of the mating face for the oil sump gasket, the casing cannot be removed without first removing the oil sump.

1. Drain the engine oil and remove the oil sump.

2. Remove the radiator, fan, alternator, belt tensioning and belt (if not removed earlier). If the engine is equipped with an air compressor or air conditioner, it has to be removed.

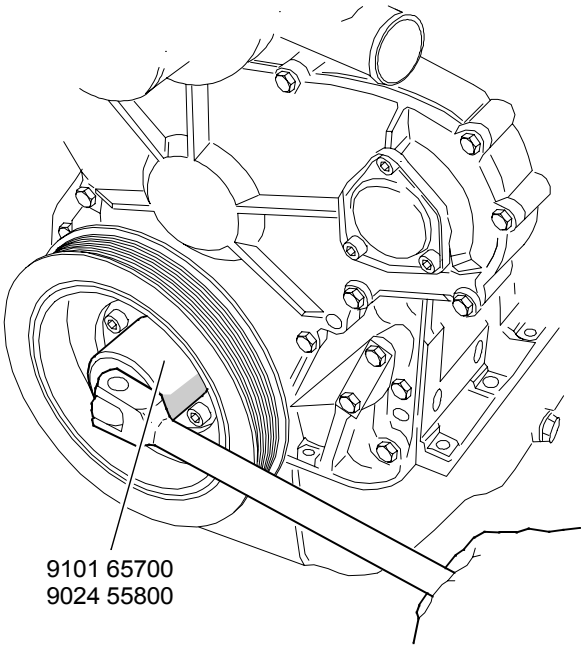

3. Loosen the crankshaft nut (special tool 9101 65700 for 33-, 44- and 66-engines or tool 9024 55800 for 74-engines). Remove the hub (with belt pulley).

Note! On 66-engines the belt pulley must be removed before unscrewing the nut. If the 66-engine is equipped with a viscose damper, the front end nut is opened with tool 9024 55800.

4. Remove the drive unit and hydraulic pump (if installed).

5. Remove the timing gear casing cover and the oil deflector ring at the front end of the crankshaft.

6. Remove the injection pump. See instruction **13 C**.

Note! If the timing gear casing is not to be changed, the injection pump can remain in place. In which case disconnect all leads and pipes from the pump.

7. Unscrew the idler gear bolts (17 and 22 mm). Remove the flange, gear wheel and bearing journal.

8. Extract the camshaft.

Note! If the cylinder head and valve mechanism have not been removed, the tappets must be prevented from falling down, see instruction **4 B**.

9. Remove the timing gear casing. Ensure that all sealing surfaces are not damaged.

10. Remove the crankshaft front sealing ring from the front casing and clean all the parts that have been removed.

B. Reconditioning idler gear

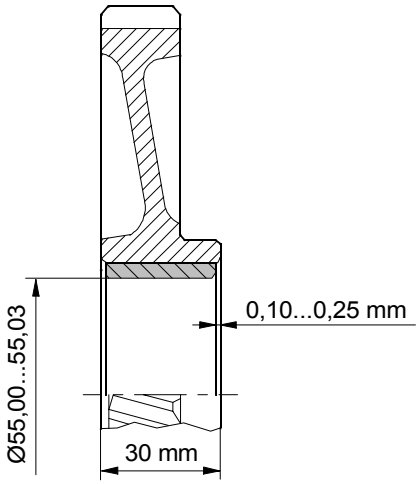

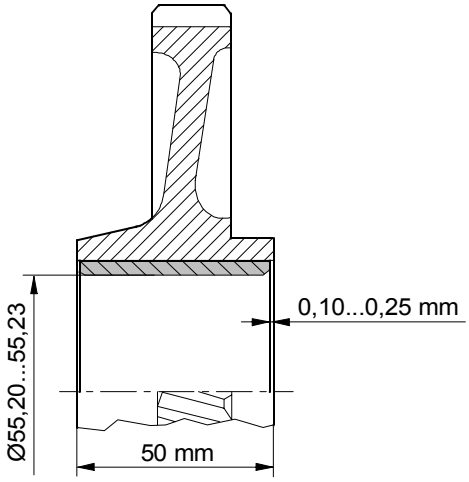

If the idler gear bushing is changed, press in a new bushing so that its rear edge is **0,1...0,25 mm** inside the gear wheel rear edge.

https://truckmanualshub.com/

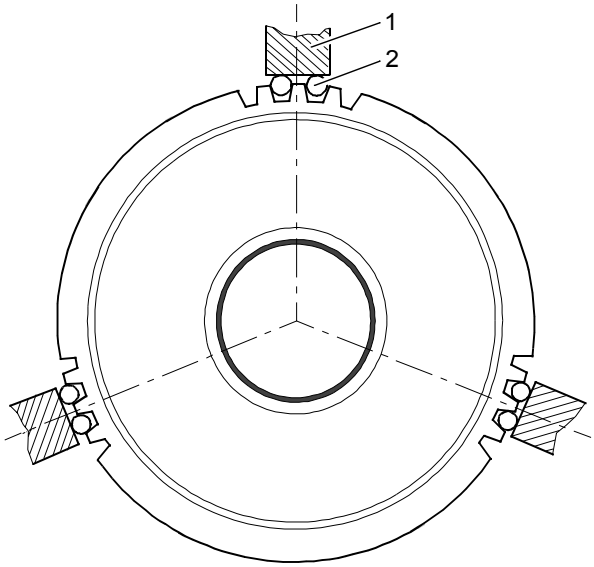

1. Chuck of lathe
2. Roller 5 mm

Machine the idler gear bushing inner diameter to a correct dimension after fitting. Centre the idler gear according to figure above so that tooth backlash is kept the same.

C. Fitting timing gear casing

The position of the timing gear casing and cover is determined by two tension pins. Therefore centring should not be undertaken in connection with fitting. However, the tooth backlash between the different gears should be checked. Casing and covers that are delivered as spare parts also have holes for the tension pins already machined.

1. Fit the casing with a new gasket against the cylinder block. Drive in the tension pins with drift 9025 98700. Tighten bolts and nuts.

2. Fit the injection pump together with gear wheel (if removed).

3. Lubricate the camshaft bearings and insert the shaft in the cylinder block. Release the push rods and tappets if they have been suspended.

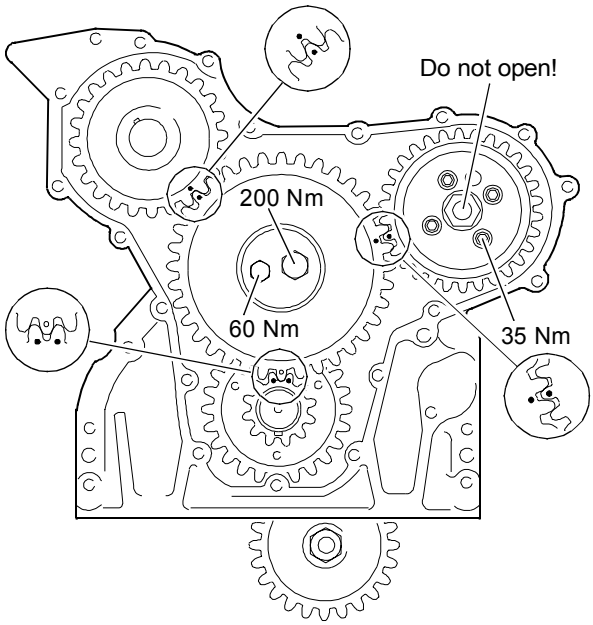

4. Fit the idler gear with shaft stud and ensure that the markings are in the correct position. Fit the washer and tighten the bolts to the correct torque.

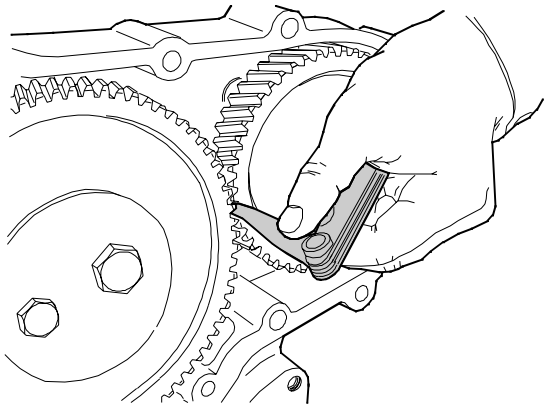

5. Check the tooth backlash which should be **0,05...0,25 mm**.

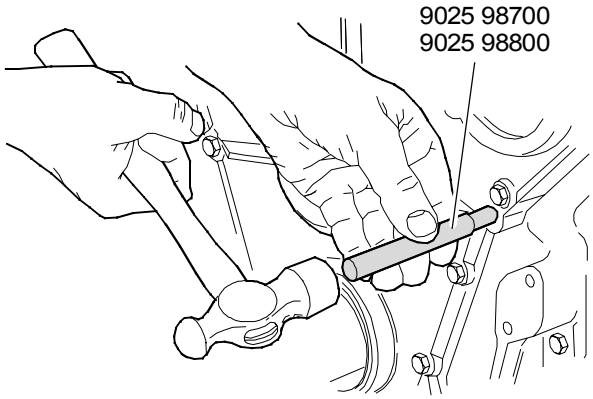

6. Fit the oil deflector ring on the crankshaft and fit the timing gear casing cover using a new gasket. Drive in the tension pins with drifts 9025 98700 and 9025 98800 respectively (the tubular pin round the screw stud). Tighten bolts and nuts.

https://truckmanualshub.com/

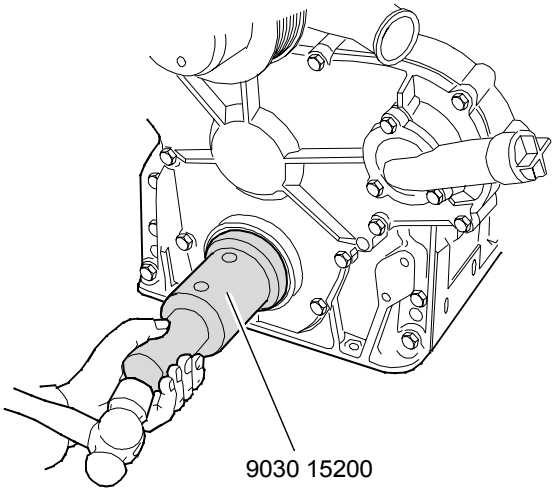

7. Fit the protective plate into the seal location and fit the crankshaft front seal with special tool 9030 15200.

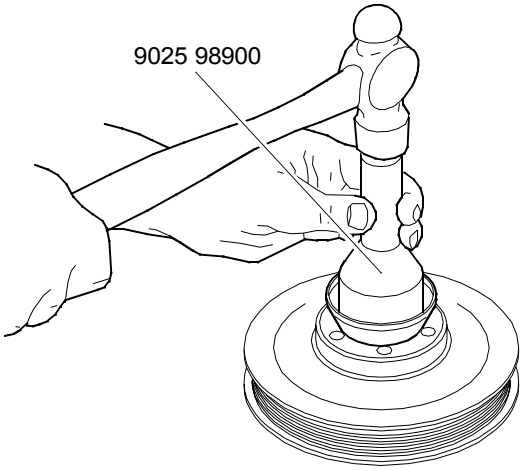

8. Fit the dust shield on the crankshaft hub, if it has been removed. Use drift 9025 98900.

9. Lubricate both the seal and sealing surfaces and fit the crankshaft hub (with belt pulley).

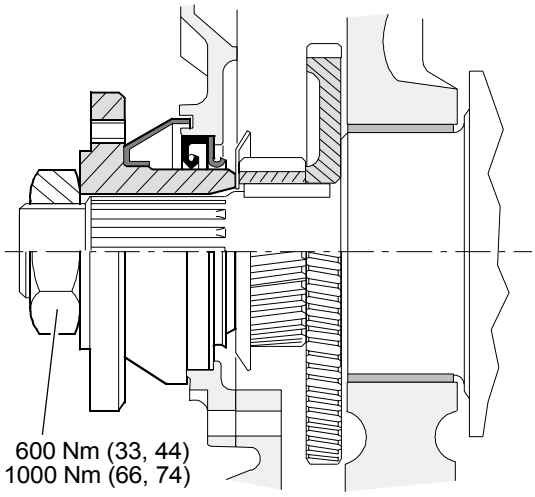

10. Lubricate the crankshaft nut threads. Tighten the nut to **600 Nm** on 33- and 44-engines and **1000 Nm** on 66- and 74-engines.

11. Fit the other detached parts.

D. Idler gear with bevelled ball bearings

In some 66- and 74-engines versions bevelled ball bearings are need in the idler gear. The two-cylinder compressor, fitted to the gear housing, is run trough a separate rear.

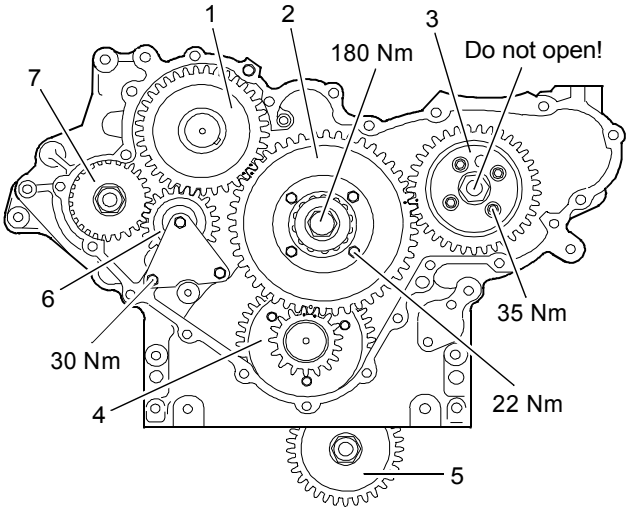

1. Camshaft gear
2. Idler gear
3. Injection pump gear
4. Crankshaft gears
5. Oil pump gear
6. Idler gear of compressor
7. Compressor gear

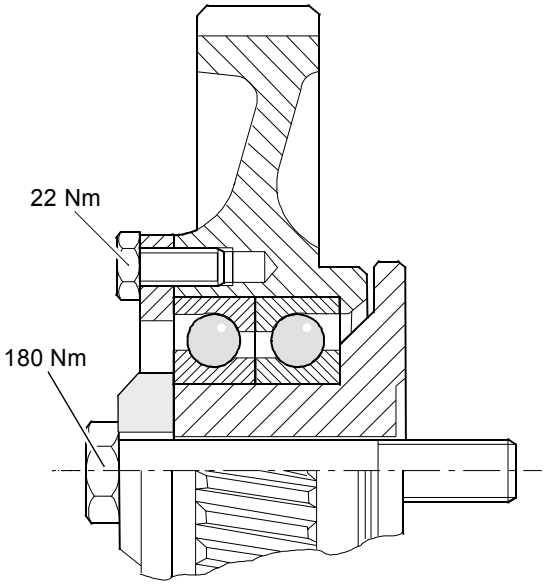

1. Fit the idler gear bearings, as the picture shows, pressing from the outer ring. Fit the holding ring and tight the bolts, lightly oiled, to **22 Nm**. Press the shaft to its position supporting the bearing from the inner ring. The idler gear screw tightness is **180 Nm**.

https://truckmanualshub.com/

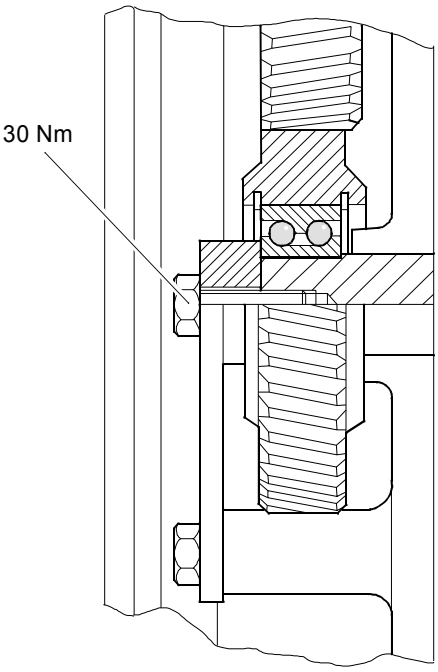

2. If the compressor gear shaft has been removed, apply on its outer face Loctite 601 and hit the shaft in its position so that the shaft and gear housing back surfaces are at the same level. Fit the bearing and the gear so that the groove of the bearing inside ring comes outwards. Remember the lock rings! Fit the retaining ring and tighten the screws to **30 Nm**.

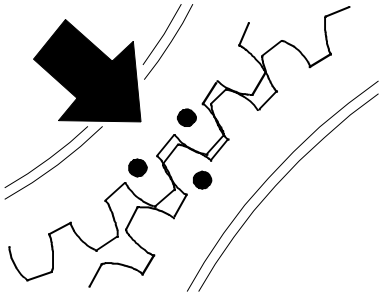

3. Note when assembling the camshaft, the timing mark that differs from the other engines.

E. Power take-off

In the engines is used a transmission that can be equipped with a PTO run from the camshaft gear. The PTO can run e.g. a hydraulic pump.

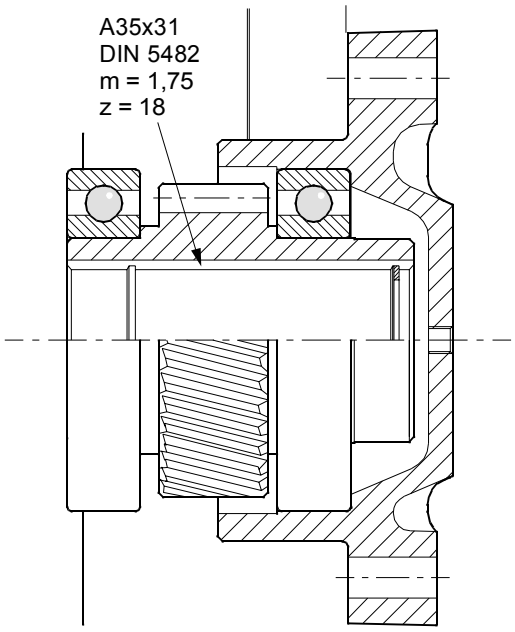

Note! Use molybdenite-sulphide (MoS2) ball bearing grease (NLGI 2) for the grooves of the hydraulic pump shaft and the coupling sleeve.

https://truckmanualshub.com/

9. TIMING GEAR ASSEMBLY

84-engines

A. Removing timing gear casing

As the timing gear casing bottom face forms a part of the mating face for the oil sump gasket, the casing cannot be removed without first removing the oil sump.

1. Drain the engine oil and remove the oil sump.

2. Remove the radiator, fan, alternator, belt tensioning and belt (if not removed earlier). If the engine is equipped with an air compressor or air conditioner, it has to be removed.

3. Remove the crankshaft belt pulley and the vibration damper.

Note! When removing the hub piece from the crankshaft front end mark the correct position of the hub.

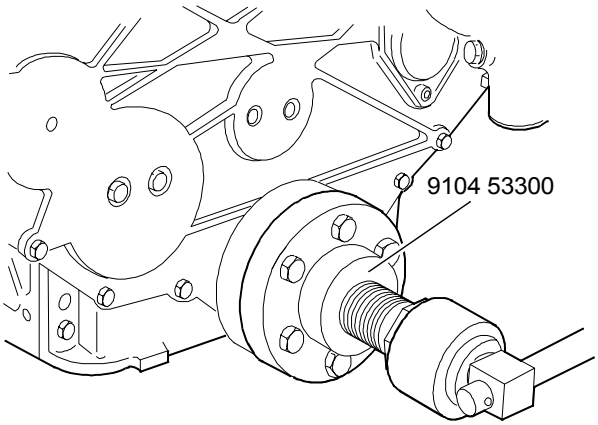

4. Loosen the crankshaft nut about two turns (special tool 9024 55800). Fit extractor 9104 53300 and extract the crankshaft hub. Take off the extractor, open the nut and remove the hub.

Note! Do not remove the nut completely first. The hub will be dashed dangerously when it is loosen.

5. Remove the cooling pump, observe the retaining screws on the injection pump side. Remove the timing gear casing cover.

6. Remove the injection pump. See instruction **13 C**.

Note! If the timing gear casing is not to be changed, the injection pump can remain in place. In which case disconnect all leads and pipes from the pump. (Bosch P injection pump, loosen bottom mounting from the pump.)

7. Unscrew the idler gear screws and remove the idler gear (broad timing gear casing).

8. Extract the camshaft.

Note! If the cylinder head and valve mechanism have not been removed, the tappets must be prevented from falling down, see instruction **4 B**.

9. Remove the timing gear casing. Ensure that no sealing surfaces are damaged.

10. Remove the crankshaft front seal ring from the front casing cover and clean all parts removed.

B. Fitting timing gear casing

The position of the timing gear casing and cover is determined by two tension pins. Therefore centring should not be undertaken in connection with fitting. However, the backlash between the different gears should be checked. Casing and covers that are delivered as spare parts also have holes for the tension pins already machined.

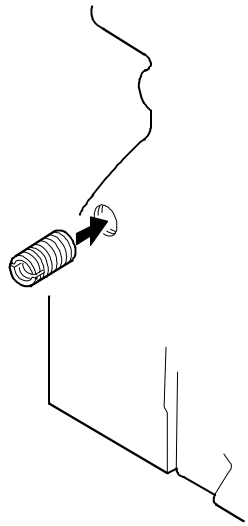

1. Screw in the thread piece M14/M8 to the cylinder block (narrow timing gear casing). Fit the casing with a new gasket against the cylinder block. Hit in the tension pins with drift 9025 98700. Tighten screws and nuts.

2. Fit the injection pump and its gear wheel (if removed).

3. Lubricate the camshaft bearings and insert the shaft in the cylinder block. Release the push rods and tappets if they have been suspended.

https://truckmanualshub.com/

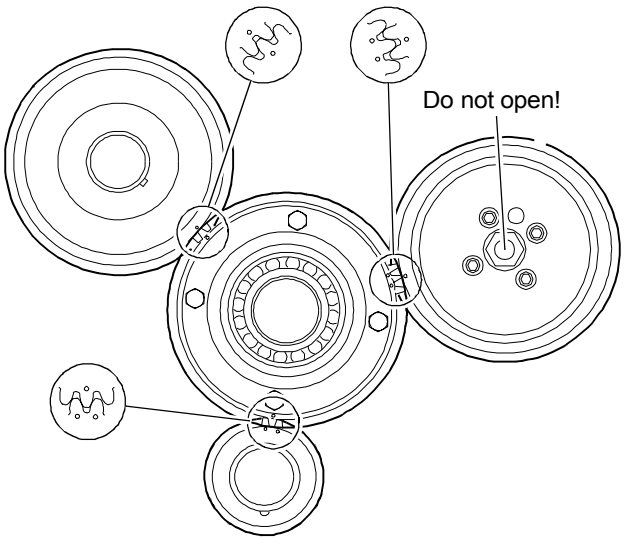

Position of the timing marks.

Narrow timing gear casing

With the broad timing gear casing skip to the point 8.

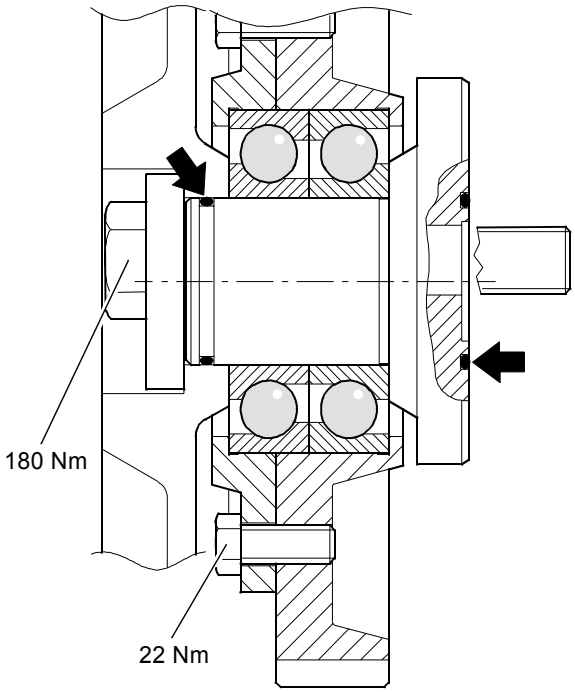

4. Assemble the idler gear as in picture. Place the o-ring between the shaft and the cylinder block and fit the idler gear in its place. Note the correct position of the timing marks. Place an o-ring also in the shaft front end.

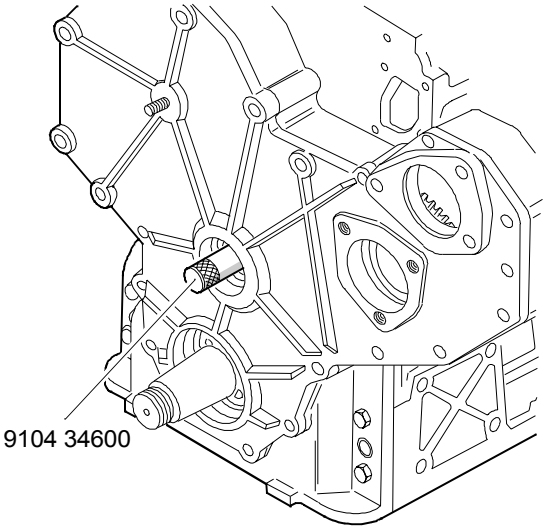

5. Fit the guide pin 9104 34600 instead of the idler gear bolt. Fit the camshaft axial controller in the cover (apply sealing compound to the thread) and fit the cover. Hit in the tension pins.

Note! If the crankshaft oil throwing ring is removed, fit it (drift 9103 94900) before fitting the cover.

6. Tighten the cover screws. Remove the guide pin, fit the idler gear shim and tighten the screw **180 Nm**.

7. Skip to the point 12.

Broad timing gear casing

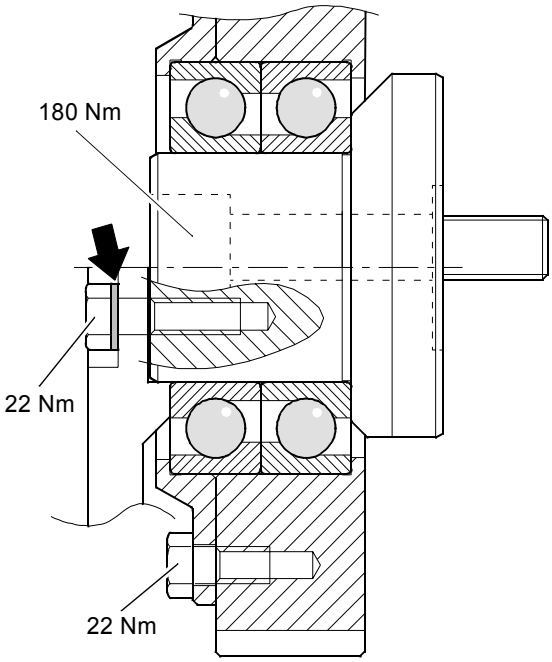

8. Assemble the idler gears as in picture. Fit the big idler gear in its position. Note the position of the timing marks. Fit also the small idler gear.

https://truckmanualshub.com/

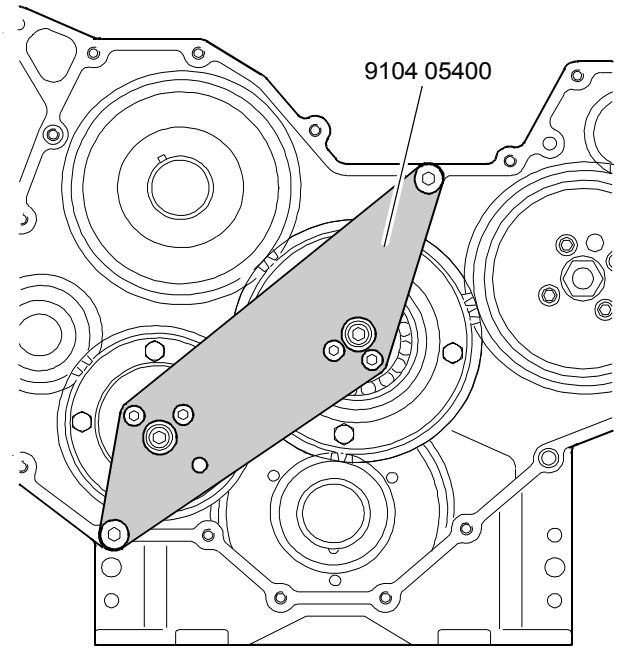

9. Tighten the guide bolts in the guide unit frame and position the unit on the idler gears as in picture (guide bolts in the idler gear shaft holes and housing holes). Tighten the idler gear bolts through the guide unit holes, tighten **180 Nm**. Remove the guide unit.

10. Check the tooth backlash, which should be **0,05...0,25 mm**.

11. Fit the drive unit shaft and camshaft axial controller in the front cover (apply sealing compound to the thread). Fit the cover and hit in the tension pins. Observe the idler gear shaft bolt seals. Fit the drive unit rear bearing and cover.

Note! If the crankshaft oil throwing ring is removed, fit it (drift 9103 94900) before fitting the cover.

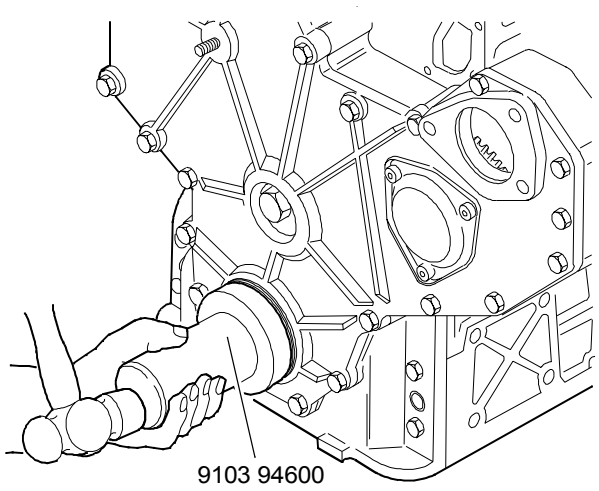

12. Fit the protective plate into the bottom of the seal position and fit the crankshaft front seal with special tool 9103 94600.

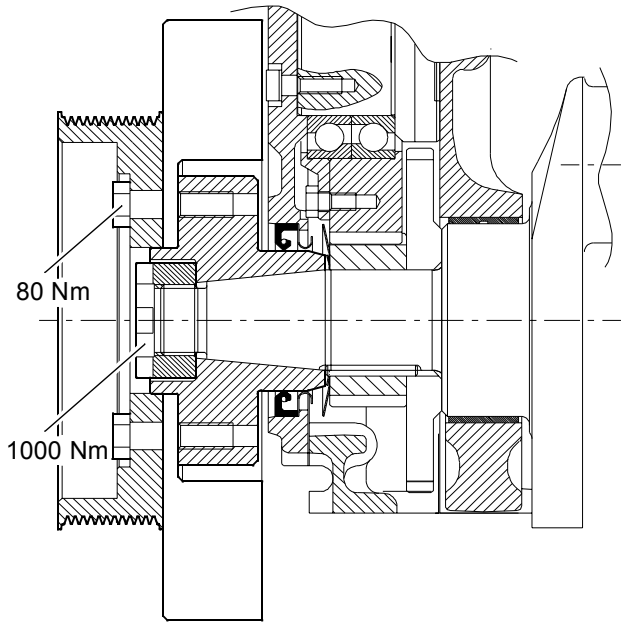

13. Lubricate both the seal and sealing surfaces and fit the crankshaft hub. Lubricate the crankshaft nut threads and tighten the nut to **1000 Nm**.

14. Fit the other removed parts.

C. Fan drive device

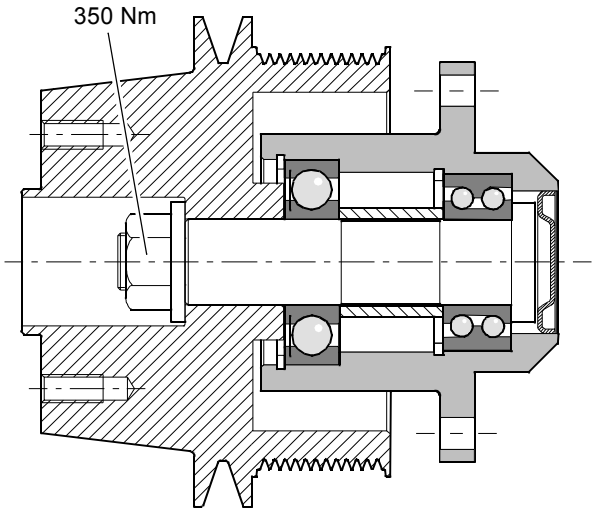

1. Assemble the drive device as the picture shows. Fit inner bearing and circlip. Fill the bearing housing partially with heat resistant ball bearing grease (NLGI 2). Fit the intermediate sleeve, outer bearing and circlip. Note the position of the outer bearing as assembling.

2. Press the shaft into its position so that the pressing force is not transmitted by the bearing balls.

https://truckmanualshub.com/

3. Tap the blocking plug (if mounted) in its place with fitting drift 9025 87400.

4. Fit the belt pulley, washer and nut. Tighten the nut to **350 Nm**.

https://truckmanualshub.com/

10. LUBRICATION SYSTEM

A. Oil pressure regulating valve

If the engine lubricating oil pressure is insufficient or if it varies, the regulating valve should be checked after first checking the oil level.

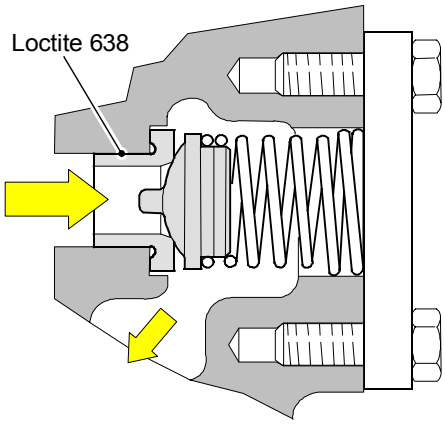

1. Remove the cover and the spring with valve plate.

2. Clean the parts and check that the sealing surfaces are undamaged. Damaged parts should be changed. Scrape off any remains of the gasket.

Note! There are two types of the spring.

3. Apply locking fluid (e.g. Loctite 638) onto outside of the valve seat. Tap the new valve seat in the cylinder block using a suitable drift. Place the spring with valve plate into the cylinder block and fit the cover with a new gasket.

B. Removing and dismantling lubricating oil pump

1. Drain the engine oil and remove the oil sump.

2. Remove the oil pump suction and pressure pipe.

3. Remove the oil pump together with any shims between the pump and the cylinder block.

4. Remove the pump cover and the gasket. Remove the gear on the dead axle.

5. Clamp the pump gear across the teeth in a vice fitted with soft jaws, and loosen the drive gear nut. Knock the gear wheel off by hitting the end of the shaft with a soft hammer. Pull out the drive shaft-gear wheel.

6. Clean the parts and check for wear and other damage. See "**Technical data**", point "**Oil pump**". Change damaged parts and all seals.

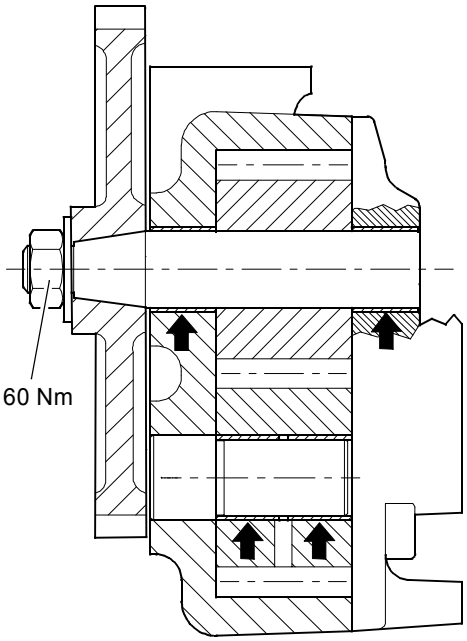

7. On the 66-, 74- and 84-engines the bearing points are provided with separate bearing bushings. If you change the bushings, machine them to dimension of **18,000...18,018 mm** after fitting.

C. Assembling and fitting lubricating oil pump

1. Fit the gear wheels in the pump body. Fit the cover using a new gasket. Partly tighten the screws. Rotate the pump shaft and tap the side of the cover lightly until the position is reached where the shaft rotates most freely. Tighten the screws and check that the shaft still rotates freely.

2. Fit the drive gear onto the shaft. Apply locking fluid (e.g. Loctite 242) onto the nut threads and tighten the nut to **60 Nm**. Remember the washer under the nut.

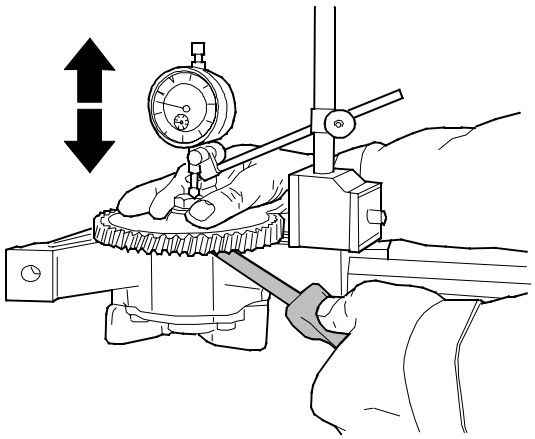

3. Fasten the oil pump in a vice and check the end float between gear and pump housing. The clearance which should be **0,03...0,11 mm**, is adjusted by the number of gaskets between the cover and body.

https://truckmanualshub.com/

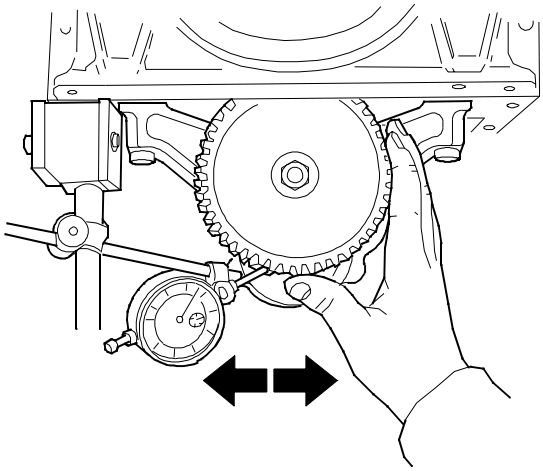

4. Fit the pump and check the tooth backlash against the crankshaft gear. The clearance, which should be **0,05...0,25 mm**, is adjusted with shims between the pump body and the cylinder block (shim 0,2 mm, order no. 8360 07871). One shim increases/decreases the backlash about 0,07 mm.

Note! When measuring the tooth backlash, the engine should be the correct way up as the crankshaft bearing clearance affects the tooth backlash.

5. Connect suction and pressure pipes together with new seals.

6. Fit the oil sump and fill in the lubrication oil.

D. Piston cooling nozzles

The engines with high output are equipped with the piston cooling nozzles. The cooling nozzles can be removed after removing the oil sump. The nozzles have a ball valve with an opening pressure of **3±0,25 bar**.

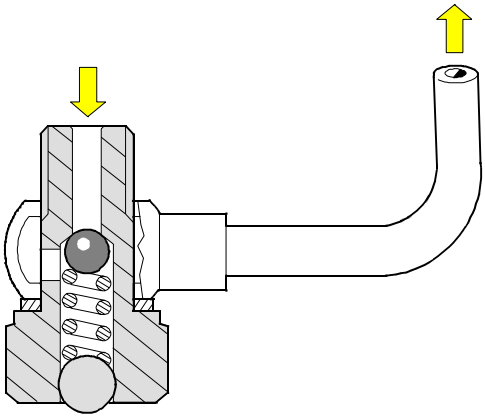

1. Change the valve if necessary. Detach the valve from the engine and remove the nozzle pipe. Fit a new valve.

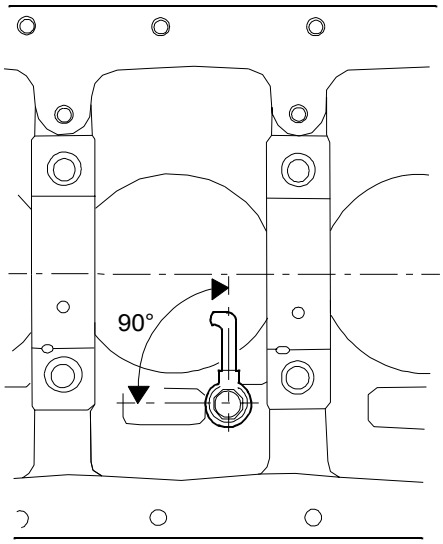

2. Fit the nozzle pipe at the angle of **90°** to the centre line of the crankshaft according to the above picture. Tighten the valve to **30 Nm**. Ensure that the pipe does not touch the pistons or connecting rods when the engine is running.

E. Fitting oil sump gasket

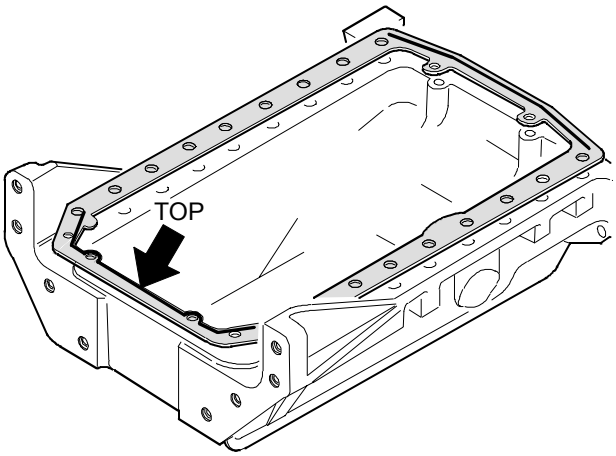

Fit the oil sump gasket with the silicone stripes against the cylinder block (self carrying and casted oil sumps).

F. Lubricating oil cooler

33-, 44,- 66- and 74-engines

Some engines are equipped with a oil cooler, positioned in between the oil filter and the cylinder block.

1. The engine coolant should be drained before removing the lubricating oil cooler.

https://truckmanualshub.com/

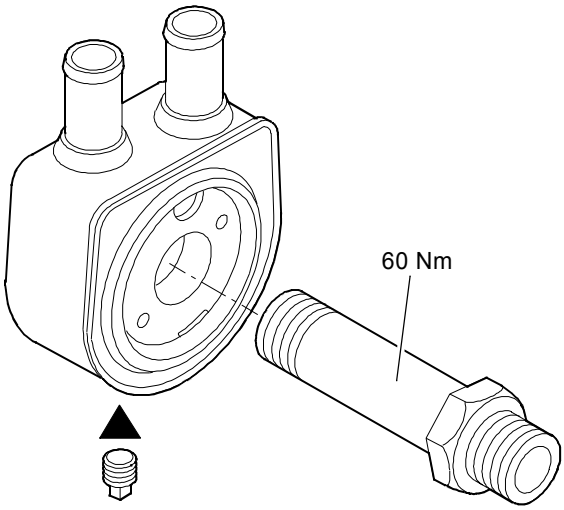

2. Fit new sealing rings. Fit the cooler with draining plug turned downwards. Connect coolant pipes in the correct way.

3. Apply locking fluid (e.g. Loctite 242) to the nipple (the thread which attaches to the cylinder block) and tighten it to a torque of **60 Nm**.

84-engines

Practically there are two different oil coolers, the difference being position of the oil filter, see picture below.

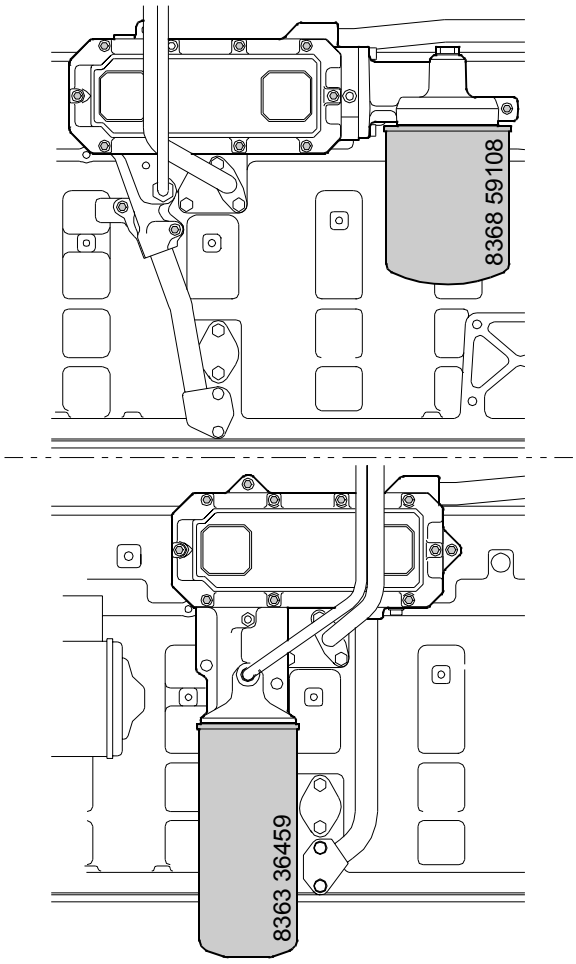

To remove

1. Open the coolant drain plug under the oil cooler and drain the coolant into a suitable container. Remove the pipe going into the thermostat housing.

2. Remove the turbo oil pipes and the oil pressure pipe from the cylinder block. Remove the oil filter. Drain the oil into a container.

3. Remove the oil cooler from the engine. Open the cooler housing and remove the guide plate. Unscrew the cell screws and remove cell from the body. Clean the all parts.

Fitting oil cooler

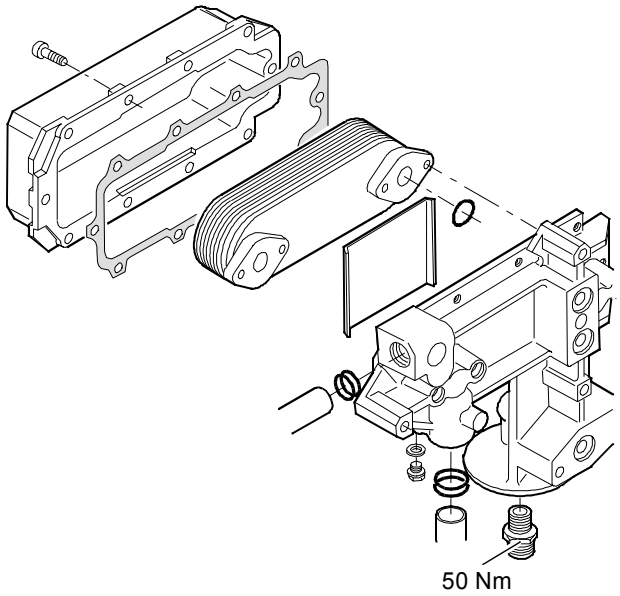

1. Assemble the oil cooler using new gaskets. Fit the cell to the body. The oil side can be pressure tested before fitting the housing. Test pressure is **5 bar**.

2. Push the guide plate between the cell and the body and fit the housing. If needed now can the water side be pressure tested, test pressure **5 bar**.

3. Assemble the oil cooler to the engine and assemble oil- and coolant pipes. Replace the oil filter.

4. Fill the coolant system. Start the engine and check for leakages.

https://truckmanualshub.com/

G. Lubricating oil quality requirements

Use lubricating oils fulfilling following quality grades.

API -grade	ASEA -grade
CG-4	E3-96
CH-4	E4-98
	E5-99

Select viscosity grade from table below corresponding to outside temperature.

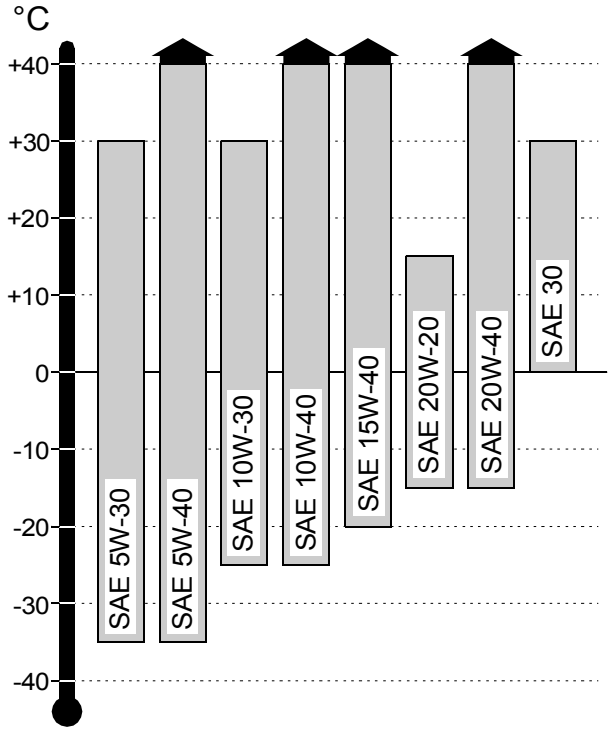

H. Oil capacities

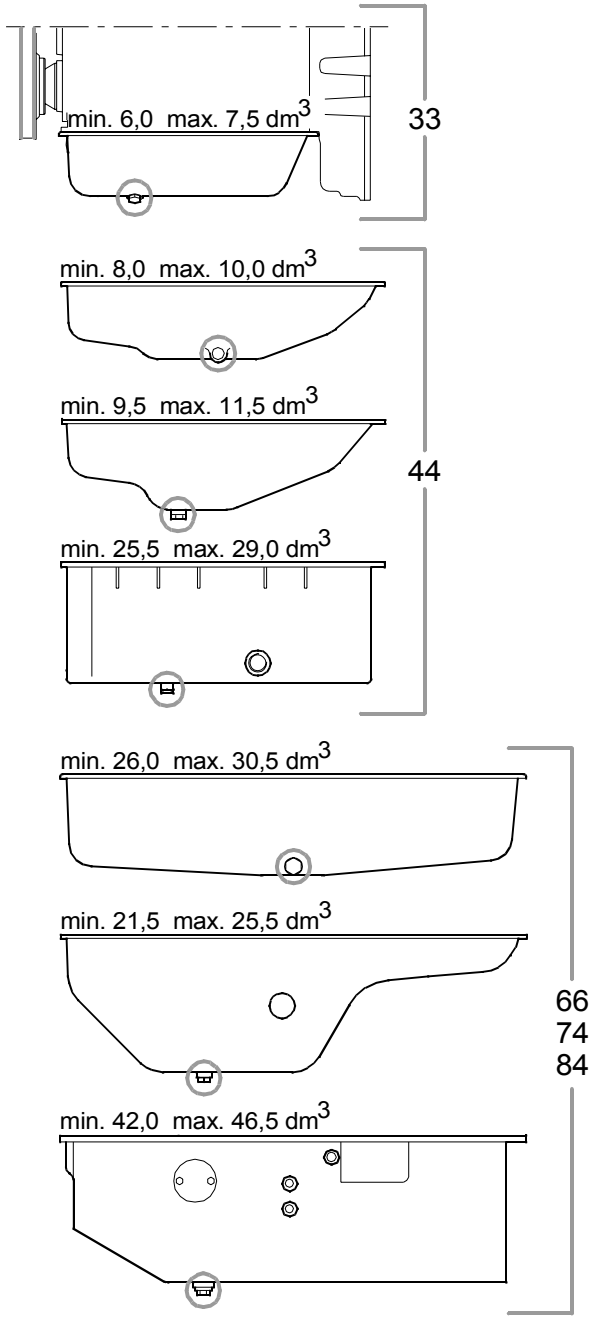

1 dm^3 = 1 litres

https://truckmanualshub.com/

11. COOLING SYSTEM

A. Quality requirements of coolant

The coolant used must meet the demands of standard ASTM D 3306 or BS 6580:1992.

- The cooling mixture must consist 40...60 % of ethylene/propylene-glycol based antifreeze and water. The best proportion is 50 % of antifreeze liquid and 50 % of water.
- The water used must be mechanically clean and not too acid (e.g. swamp water) or too hard (calciferous well water).
- Check periodically the proportion (the frostproof) of the coolant. Change the coolant every two years.

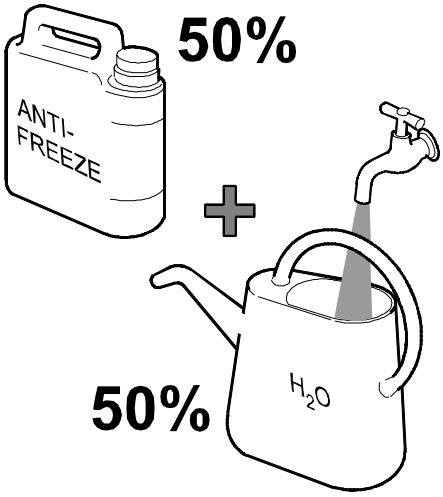

Note! Never use only water as coolant!

B. Thermostat

Check the function of the thermostat as follows:

- Lower the thermostat into a vessel of boiling water so that the thermostat does not touch the sides or bottom.
- Opening must begin under 20 seconds.
- The thermostat must be fully open under 50 seconds. Stroke, see "**Technical data**" point "**Thermostat**".

33-, 44- and 66-engines

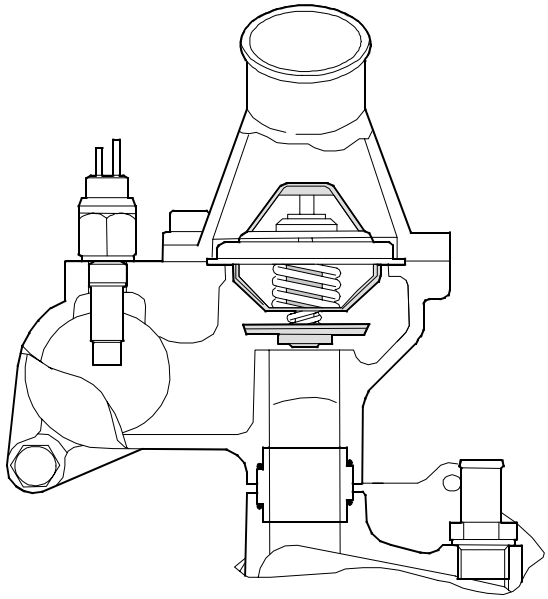

The thermostat is of a two-way type. Its opening temperature is 83°C.

66- and 74-engines

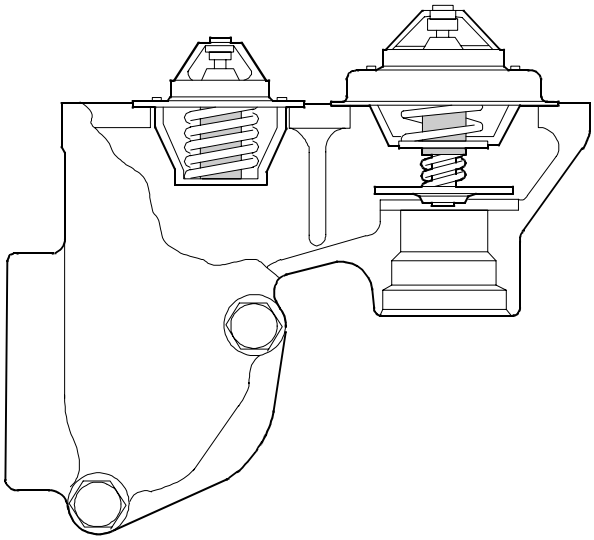

Some 66- and 74-engines have two separate thermostats. These are separated from the type of the single thermostat and they are not interchangeable. To these engine there are no separate winter thermostats.

https://truckmanualshub.com/

84-engines

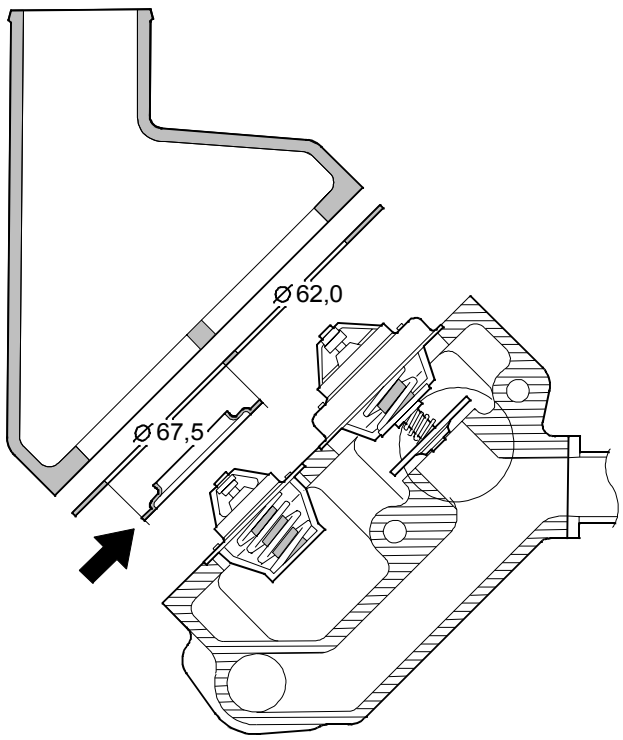

84-engines have two separate thermostats. The smaller, single-acting thermostat opens at 79°C and the other, double-acting type, at 83°C. In 84-engines there are no separate winter thermostats.

To remove

1. Drain the cooling system so that the coolant level is below the thermostats position and disconnect the top hose from the water outlet cover.

2. Remove the outlet cover and the thermostats. Clean the sealing surfaces.

To replace

1. Put the thermostats in position in the housing. Fit a new gasket and the outlet cover. For guiding you can use M8 studs (2 pcs). Observe the plate (if mounted) that comes on top of the smaller thermostat. Fit the gasket so that the bigger hole is on the same side as the plate.

2. Connect the top hose and fill the cooling system.

C. Reconditioning coolant pump

33-, 44-, 66- and 74-engines

1. Drain the coolant. Remove the thermostat housing, fan and the v-belt.

2. Remove the coolant pump. Detach the pump rear plate and clean the sealing surfaces.

3. Unscrew the belt pulley fixing nut/screw and remove the belt pulley.

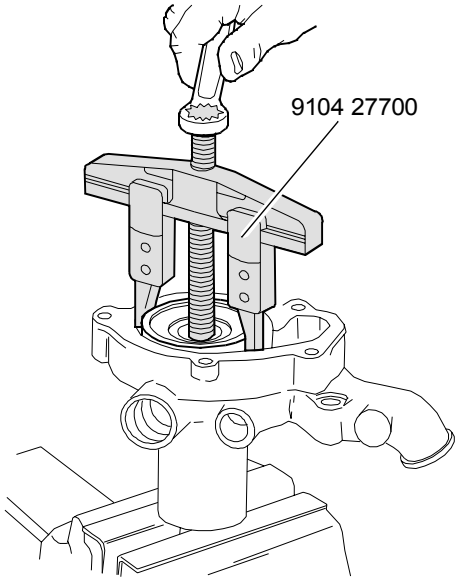

4. Remove the impeller on the shaft with puller 9104 27700 (33- and 44-engines) or 9101 93200 (66- and 74-engines).

5. Remove the circlip in the pump body. Press the shaft together with bearings in the direction of the fan. Use e.g. a hydraulic press. Support the pump body so that the bearings have enough space for releasing.

6. Tap out water and shaft seals using a drift. Clean the parts and inspect their condition. Replace faulty or worn parts with new ones.

Note! If the pump bearings have to be changed, use a reconditioning kit. This kit also contains all seals (see Parts Catalogue).

7. Drive in the new shaft seal in the housing using a suitable drift. Put the bearings and the intermediate sleeve onto the shaft. Grease bearings with heat-resistant ball bearing grease (NLGI 2). Fit the shaft and the bearings in such a way that the pressing force is not transmitted by the bearing balls. Fit the circlip for the bearing.

https://truckmanualshub.com/

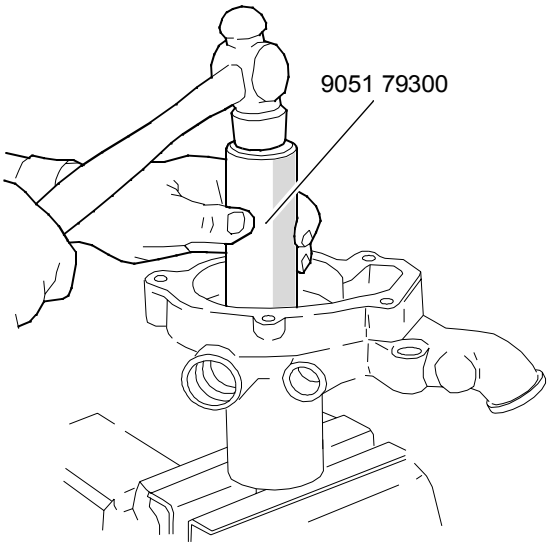

8. Fit the water seal with drift 9051 79300. Use as a "lubricating liquid" coolant between the shaft and the seal.

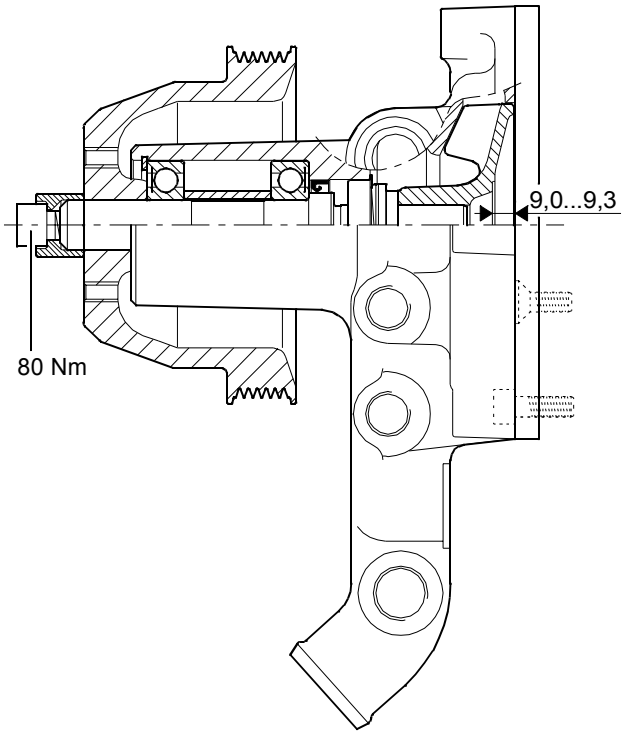

9. Press the impeller into position while, at the same time, supporting the shaft at the other end. The mounting depth of the impeller is in 33- and 44-engines **9,0...9,3 mm** (see picture above). Make sure that the shaft can rotate freely. Fit the belt pulley and tighten its attaching screw to a torque of **80 Nm**. Note specially the left hand thread of belt pulley attaching screw.

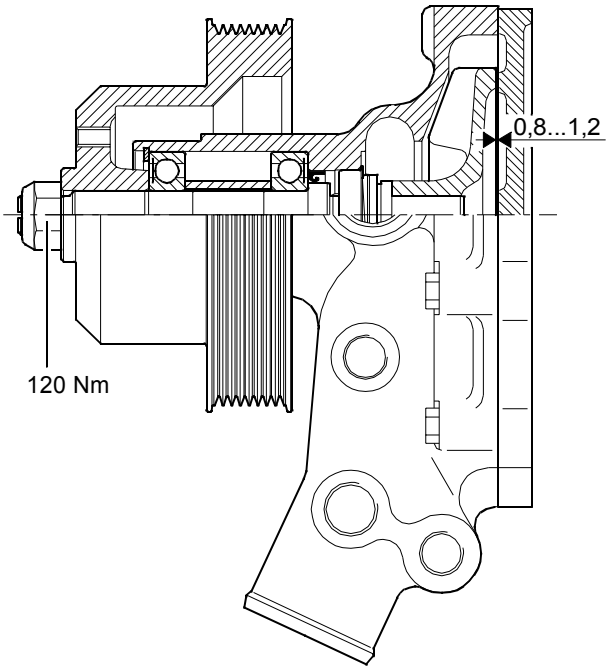

The mounting depth of the impeller is in 66- and 74-engines **0,8...1,2 mm** (see picture above). Make sure that the shaft can rotate freely. Fit the belt pulley and tighten its attaching nut to a torque of **120 Nm**.

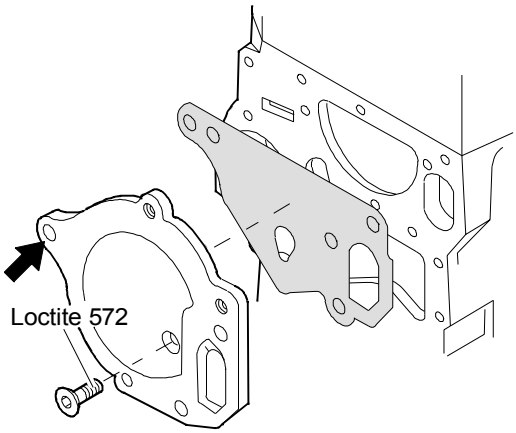

10. Fit the rear plate to the cylinder block using a new seal. Use guide pin (Ø8 mm) in the hole shown with arrow in the picture above. Apply sealing compound to the thread of screw.

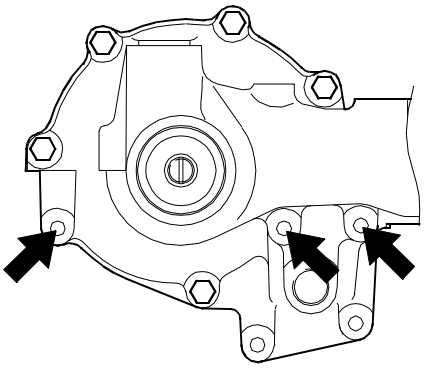

On 66- and 74-engines, fit the rear plate to the pump using a new seal. Use guide pins (Ø8,5 mm) in the holes shown with arrows in the picture above.

https://truckmanualshub.com/

D. Coolant pumps with heavy duty bearings

66- and 74-engines

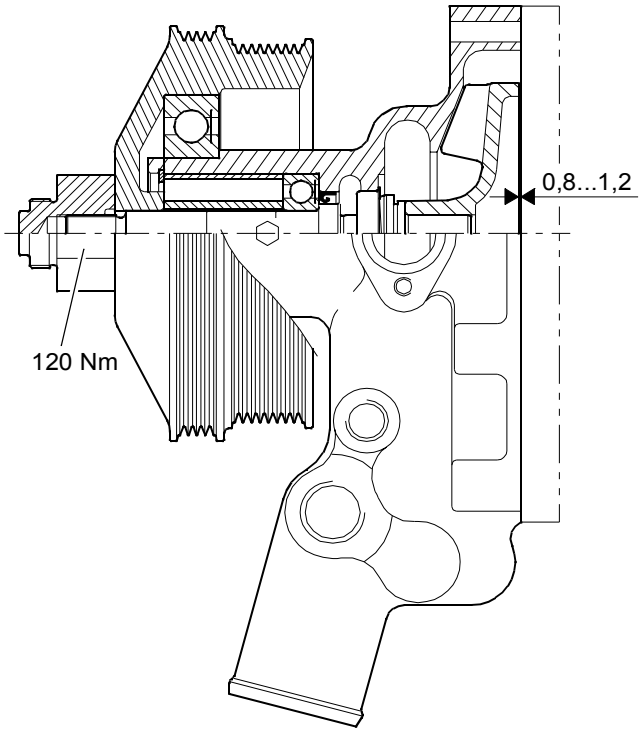

Some versions of 66- and 74-engines have a heavy duty bearings in the coolant pump. The reconditioning of this pump is done according to the instruction **11 C**. Note specially the position of the front bearing as assembling.

E. Reconditioning the coolant pump

84-engines

1. Drain the coolant. Disconnect the hose at the inlet connection of the coolant pump. Loosen the coolant pipes from the coolant pump.

2. Release the three screws which retain the coolant pump to the cover of the timing case-from the rear. Remove the coolant pump.

3. Unscrew the gear fixing nut and remove the gear. Remove the pump housing from the pump body.

4. Remove the circlip in the pump body. Press the shaft together with bearings in the direction of the gear.

5. Tap out the water seal and shaft seal using a drift. Remove o-ring seals and clean the parts and inspect their condition. Replace faulty or worn parts with new ones.

Note! If the pump bearings have to be changed, use a pump repair kit. This kit also contains all seals (see Parts Catalogue).

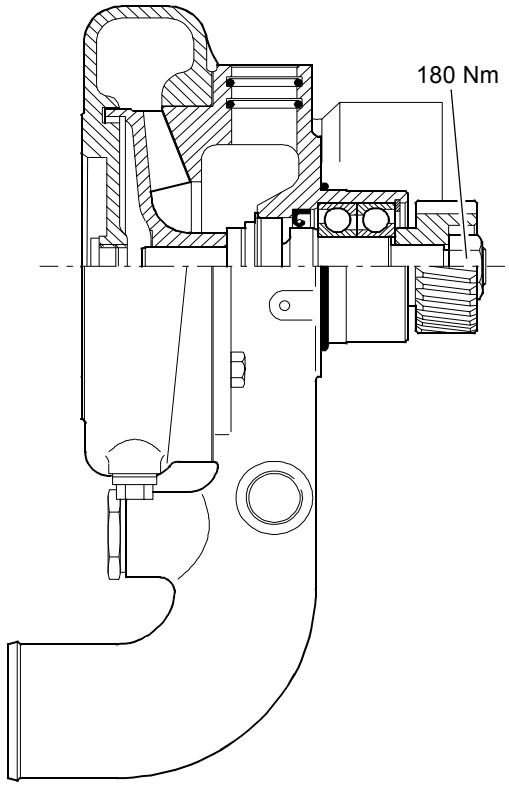

6. Tap the new shaft seal in the body using a drift 9103 41000. Grease bearings with heat resistant ball bearing grease (NLGI 2). Press in the bearings and fit the circlip.

7. Fit the shaft in such a way that the pressing force is not transmitted by the bearing balls.

8. Hit the water seal into its position with tool 9103 41100. Press the impeller to its position (towards the shaft shoulder) supporting the shaft from the other end. Make sure that the shaft can rotate freely.

9. Fit the gear on the shaft and tighten the nut to **180 Nm**.

10. Fit the pump housing using new gasket.

11. Fit the pump using new o-ring.

Note! If both coolant pump and injection pump are removed, fit the coolant pump first (one fitting screw can not be fitted as injection pump is in position).

https://truckmanualshub.com/

12. INLET AND EXHAUST SYSTEM

An engine that is equipped with a turbocharger is a great deal more sensitive to disturbances and impurities in the inlet and exhaust systems than a naturally aspirated engine. Therefore special attention should be given to the whole inlet and exhaust system.

A. Checking air cleaner

The engine performance and length of service life depend to a great extent on the state of the air cleaner. A defective air cleaner allows impurities to pass through, which in time damage the turbocharger and the engine. A blocked air cleaner lowers the engine output and also causes oil leakage through the sealing ring on the turbocharger shaft.

Note! The safety filter inside the main filter should not be removed unnecessarily, for checking or cleaning. The safety filter must not be cleaned, but should be changed when necessary.

B. Checking inlet and exhaust pipes

Important! Leaks in the inlet or exhaust system markedly lower the effect of the turbocharger. Because of the pressure, even small leaks in the manifold or in the turbine inlet contact flange quickly increase in size. For this reason all leaks must be dealt with immediately.

1. Inspect the pipes and sealing surfaces between the air cleaner and the turbocharger, as well as between the turbocharger and the intake manifold. If the intake manifold is dusty on the inside, there is a leak in either the air cleaner or the inlet pipes. Remedy the leak.

2. Clean the intake manifold sealing surface. Check that the sealing surface is flat using a straight ruler. If the surface is not flat or it has scratches, machine or renew the intake manifold. On 66-, 74- and 84-engines ensure that the cylinder heads are parallel.

3. Fit a new gasket and fasten the intake manifold. Tighten the manifold fixing screws to a torque of **30 Nm**. Fasten the air pipes carefully.

4. Check that the exhaust manifold is air tight. Tighten the nuts to **50 Nm** and inspect for any damage (cracks, deformation, corrosion etc.). Check also the connection between the turbocharger and the exhaust manifold.

5. Remove the manifold if necessary. Clean the sealing surfaces and remove any carbon deposits. Check that the sealing surfaces are flat. If the fastening flanges are twisted or there are scratches on the sealing surfaces, machine the flanges or renew the exhaust manifold.

6. Ensure that no loose objects or impurities have entered the exhaust pipe or the silencer. Any such loose objects or impurities can increase the back pressure for the exhaust gases from the turbine wheel.

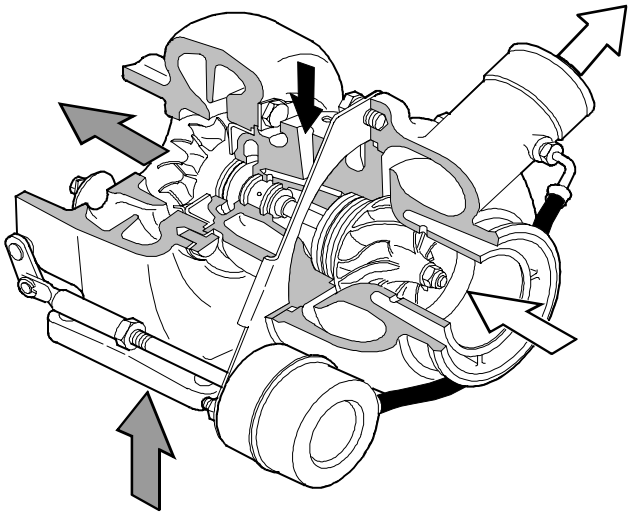

Inlet air
Exhaust gases
Lubrication oil

C. Checking turbocharger

If a fault is suspected in the turbocharger it can be located in the following way:

1. Visually inspect the turbine and compressor wheels. The vanes must not show any signs of damage, deformation or wear caused by foreign objects.

2. Investigate any oil leaks through the sealing rings on the shaft in the turbine and compressor housing.

Note! At low idling there is always a certain amount of oil leakage on the compressor side. However, this should not cause too much concern unless the oil consumption is too great.

https://truckmanualshub.com/

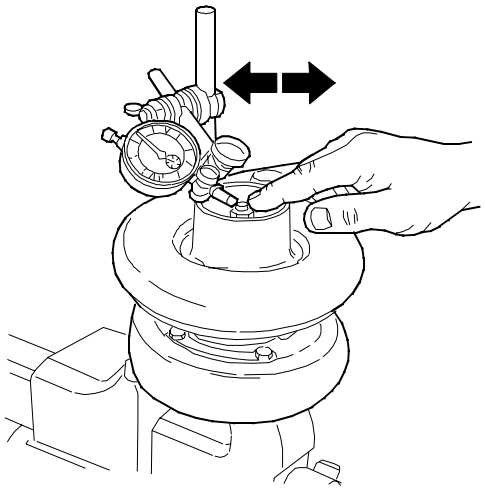

3. Check the turbine shaft running clearance. Place the stylus of a dial gauge against the shaft and move the shaft sideways. refer to the clearance given in the specifications. See "**Technical data**" point "**Turbocharger**".

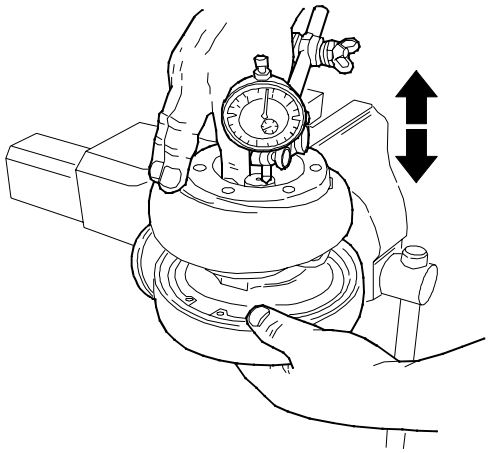

4. Check the shaft end float. Place the stylus of the dial gauge against the end of the shaft and move the shaft axially. Refer to the clearance given in the specifications. See "**Technical data**" point "**Turbocharger**".

If any defects or wear are confirmed, the turbocharger should be reconditioned.

If the engine does not work correctly and the turbocharger is not defective or too worn, the fault could be traced to one of the following items:

- Blocked air filter.
- Leakage in the inlet or exhaust systems. Leaking flange seal.
- Defective injection pump or EEM 2 control unit.
- Defective or wrongly adjusted injectors.
- Low fuel pressure (e.g. blocked fuel filter).
- Low compression, wrong valve clearance.

D. Fitting turbocharger

Locate the cause of the defects on the turbocharger. Remedy the fault before fitting the new turbocharger.

In order for the turbocharger to work satisfactorily, it is important that the engine oil is in good condition. Likewise the oil should be to the correct quality specification. The air filter and oil filter should be serviced according to the Instruction Manual specification.

The setting of the injection system critically affects the function of the turbocharger. The injection system should be adjusted according to the manufacturers instructions.

1. Check the tightness of the intake and exhaust manifolds, and that they are securely fastened. Ensure that there are no loose carbon or rust particles, or other foreign objects in the manifolds.

2. Connect the turbocharger to the exhaust manifold and tighten down using a new gasket.

3. Connect the inlet pipe and the exhaust pipe on the turbo.

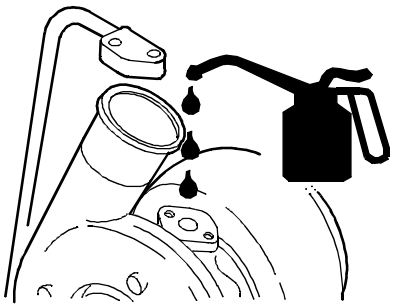

4. Pour abt. 0,1 litres of pure engine oil into the bearing housing before attaching the pressure oil pipe. This is very important in order to ensure that the turbocharger is lubricated at the time of starting.

5. Connect the pressure and return oil pipes. Use a new seal. Check that there are no tensions in the pipes when tightening.

6. Start the engine and check that there are no leaks.

https://truckmanualshub.com/

13. FUEL SYSTEM

Fortius series engine fulfils the emission requirements set by authorities (EU97/68/EC Stage 2 and EPA 40 CFR 89 Tier 2). The manufacturer guarantees that all engines of this type are equivalent to the engine that is officially approved. This must be noticed especially when performing periodical maintenance, follow carefully the service schedule. Any adjusting and repair work for the injection system or the engine control unit can only be made by a representative authorized by Sisu Diesel Inc. When performing any service or repair work use only original SisuDiesel spare parts. Inadequate or delayed service and the use of other than original SisuDiesel spare parts invalidates the responsibility of Sisu Diesel Inc. on the fulfilment of the emission requirements.

Note! This manual gives only general instructions for repair and service measures related to the fuel system. This applies particularly to changing of the injection pump which can be done only by a specially trained person who has the necessary special tools and gauges. All service and repair work related to the fuel system requires special care and cleanliness!

Injectors

Order no.	Manufacturer	Type	Nozzle no.	Opening pressure bar	Setting pressure* bar	Code
8368 54791	Stanadyne	M	8368 54792	270^{+8}	278	876
8368 54940	Stanadyne	M	8368 54941	270^{+8}	278	301
8368 54929	Stanadyne	M	8368 54930	270^{+8}	278	234
8368 54992	Stanadyne	M	8368 54991	270^{+8}	278	625
8366 59808	Stanadyne	M	8366 59902	270^{+8}	278	358
8367 64613	Stanadyne	M	8367 64614	270^{+8}	278	927

*)Value to be used when adjusting the opening pressure of a new or used injector.

Adjusting plate for injector (1,00…2,00 mm) order no. 8368 62000…8368 62020.

Tightening torques

Injector attaching nuts (on studs) ..... 15 Nm
Injector nozzle sleeve ..... 60 Nm
Delivery pipe attaching nut to injector ..... 25 Nm

https://truckmanualshub.com/

A. Removing injectors

1. Clean the injectors and the area around them. Disconnect the delivery pipes and the leak-off pipes.

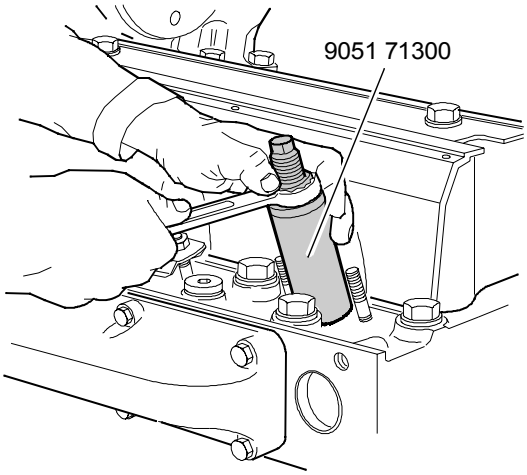

2. Remove the injector attaching nuts and remove the injector from the cylinder head. Fit protective plugs to all connections. If the injector does not rise by hand, use puller 9051 71300.

3. Remove the sealing washers from the bottom of the injector location in the cylinder head if they do no come out with the injector.

B. Inspecting injectors

Note! When pressure testing the injectors, it is important to avoid the nozzle end as the fuel jetting out easily penetrates the skin. Also bear in mind that the fuel "mist" is dangerous to inhale.

1. Clean the injector with cleaning fluid and a soft brush. The carbon deposits must not be knocked off or removed in any other way which may damage the nozzle.

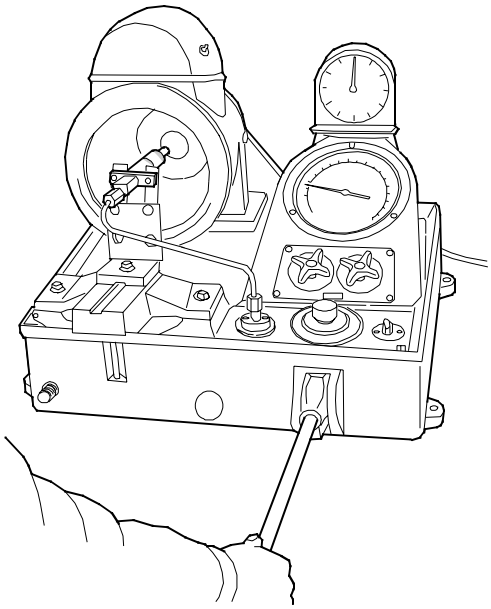

2. Secure the injector in a test bench and check the following:

- injector opening pressure
- the properties of the chattering (creaking) sound and the form of the spray pattern
- sealing of nozzle valve against its seat.

Opening pressure

Pump a few times to fill the injector. Increase the pressure in the injector until the chattering (creaking) sound becomes audible. Read off the opening pressure of the injector. If the opening pressure deviates from the given value, the injector should be taken apart and checked.

Adjustment is achieved by changing the shim. The thickness of the shims varies from 1,00...1,90 mm and they are available in increments of 0,05 mm. A thicker shim will raise the opening pressure while a thinner one lowers it. A difference in shim thickness of 0,05 mm changes the opening pressure by approx. 5,0 bar. As the opening pressure of the injector drops slightly after adjustment, the opening pressure should be set to approximately 10 bar above the value given in the specifications. This value applies both to new and used injector.

Chattering sound properties

Testing with a hand powered pump does not create the same circumstances as when the injector is fitted in the engine. Only with new nozzles are the test results reliable. With used nozzles, there is no chattering (creaking) sound when the tester is pumped at a certain rate. This has to do with the design of the nozzles.

However, with a rapid pumping on the tester handle, it should be possible to hear the chattering (creaking) sound or/and see a mist of the fuel jetting out.

Tightness of nozzle

Press down the tester pump lever until the pressure rises to approx. 20 bar below the adjusting value. Maintain this pressure for approximately 10 seconds and check whether drops of fuel are formed on the point of the nozzle. If the injector leaks, it should be cleaned or the nozzle should be changed.

https://truckmanualshub.com/

C. Reconditioning injectors

1. Secure the injector in a suitable way.

2. Unscrew the nozzle cap nut. Remove the nozzle and the parts inside the holder.

3. Clean the nozzle in cleaning fluid both inside and outside.

4. Clean the nozzle holes with a suitable needle.

5. Test the movement of the nozzle valve as follows:

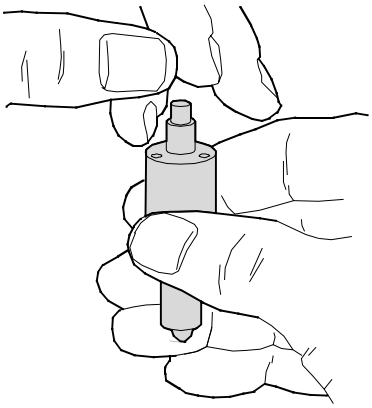

Rinse the parts thoroughly in fuel or testing fluid. Pull the valve out of the nozzle body to 1/3rd of its length. If the fit is correct, the valve should be able to slide down in the nozzle body under its own weight. Turn the valve slightly and repeat the test. Should the nozzle valve bind slightly, it should be changed.

Injector

1. Fuel inlet
2. Leak-off pipe connection
3. Adjusting shim
4. Pressure spring
5. Pressure pin
6. Nozzle body
7. Pressure chamber
8. Injector needle
9. Number code

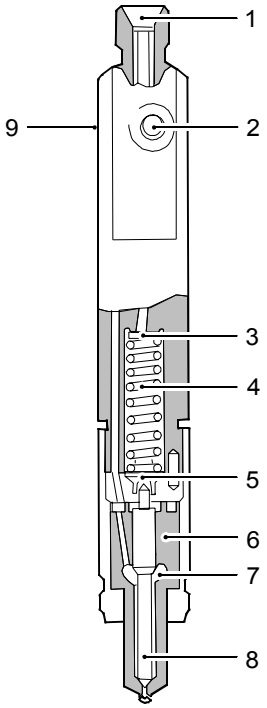

6. Before assembling, all parts should be carefully cleaned in clean fuel or testing fluid.

7. Put the same thickness of shim back as were fitted earlier. Note possible adjustment of the opening pressure. Assemble the rest of the injector. Note the position of the spring guide and the valve stop spacer.

8. Tighten the nozzle cap nut by hand and then to **60 Nm**.

D. Fitting injector in engine

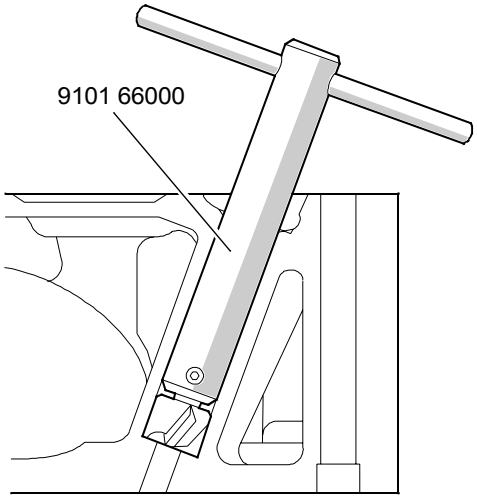

1. Clean the injector sealing surface in the cylinder head. If necessary use a reamer 9101 66000.

1. Washer
2. Rubber ring
3. Sealing washer

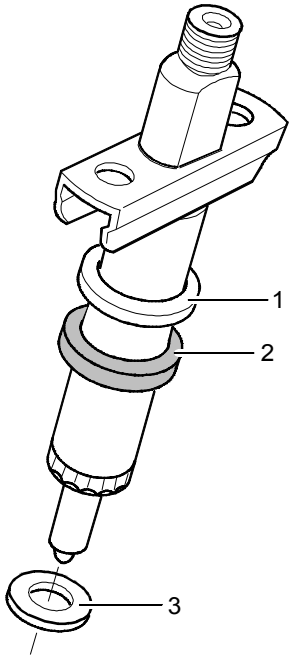

2. Fit the injector in the cylinder head using a new sealing washer.

https://truckmanualshub.com/

Note! The spray pattern from the injector is not symmetrical on purpose. It is therefore important that the injector is fitted correctly in the cylinder head. The connection for the leak-off line should be facing the valve mechanism.

3. Fit the attaching clamp and tighten the nuts evenly to **15 Nm**.

4. Connect the leak-off line together with new sealing washers and connect the delivery pipes.

Note! The screw studs in the cylinder head for the injectors should only be finger tight. If tools have to be used the studs should be tightened only lightly.

Note! Make sure, that the injector is of a correct type. Wrong injectors cause malfunctions and can damage the engine.

E. Fitting delivery pipes

1. Check the state of the pipes. If there are kinks, damage by chafing, or if the tapered sealing end is damaged, the pipes should be changed.

2. Fit the pipes without tension and check that they are at right angles to the union. Tighten the delivery pipe attaching nuts to **25 Nm**. **Do not overtighten!**

3. Fit the clamps for the pipes.

https://truckmanualshub.com/

Bosch VE rotary pump

Technical data

Injection pump

Type	Bosch VE rotary pump
Fitting position º BTDC (static):	5º
Piston distance of the injection pump (in assembling)	0,30 mm
Direction of rotation from the engine front	Clockwise
Injection order:	
- 33-engines	1 - 2 - 3
- 44-engines	1 - 2 - 4 - 3
- 66-engines	1 - 5 - 3 - 6 - 2 - 4

Fuel system

Fuel	The fuel must be according to norm EN 590
Fuel filters:	
- Pre-filter	Stanadyne 30 µ, element no. 8368 66575
- Fuel filter	Stanadyne 5 µ, element no. 8368 66577
Fuel feed pump	Diaphragm pump, separate hand lever
Fuel feed pressure (static)	0,48 bar
Fuel feed pressure min. (used pump)	0,20 bar / max. rpm

Tightening torques

Injection pump retaining nuts M8	30 Nm
Injection pump gear retaining screws	35 Nm
Injection pump coupling flange retaining nut	92,5 Nm
Delivery pipe attaching nut to pump	25 Nm

https://truckmanualshub.com/

Fuel system, description

Some Fortius series engines are using a mechanically controlled Bosch VE rotary injection pump.

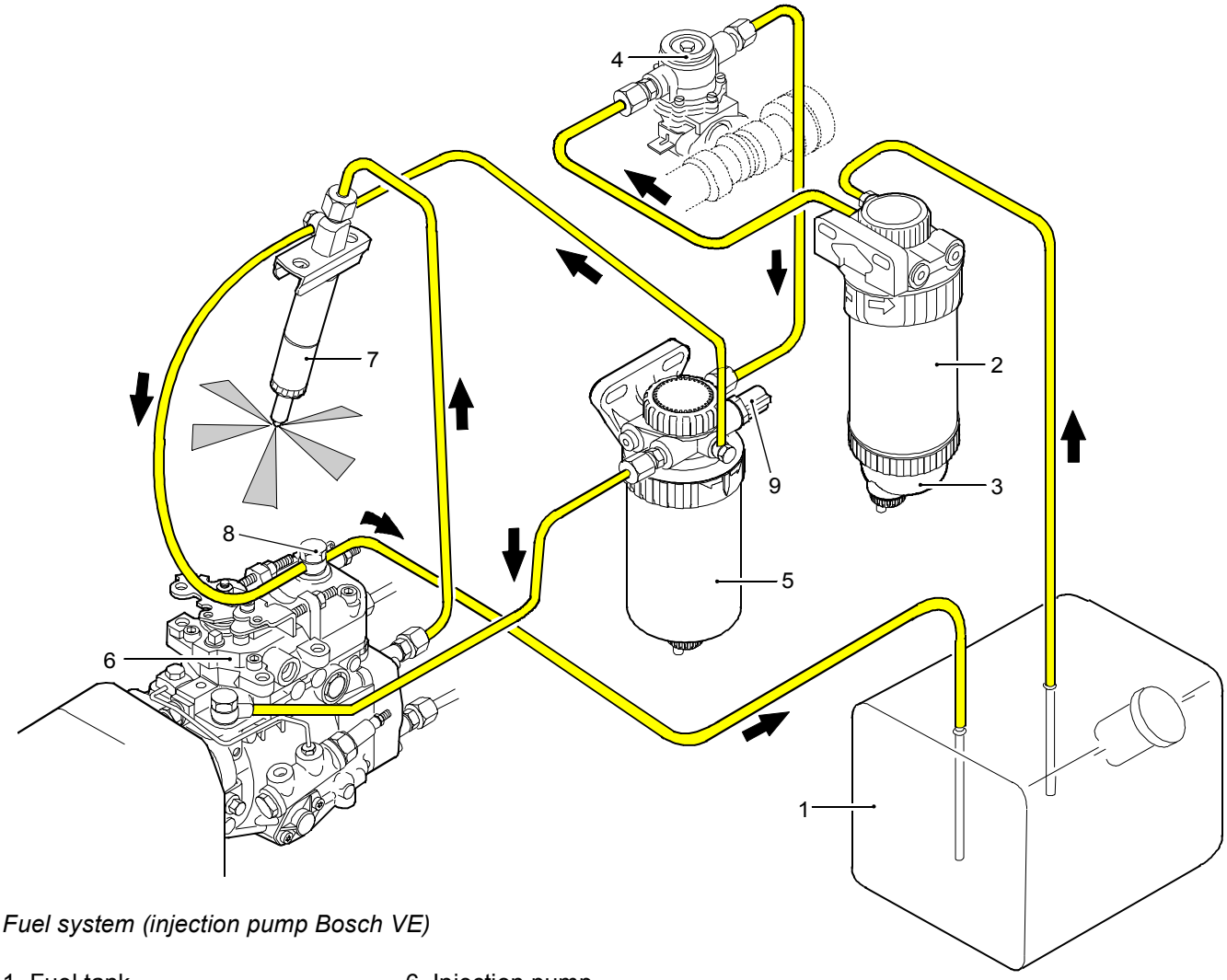

Fuel system (injection pump Bosch VE)

1. Fuel tank
2. Pre-filter
3. Water separator (optional)
4. Feed pump
5. Fuel filter
6. Injection pump
7. Injector
8. Overflow valve
9. Feed pressure sensor (0,05 - 0,2 bar)

The fuel is pumped by feed pump from the tank via a pre-filter, trough the filter to the injection pump. The injection pump forces the fuel into the injector that feeds fuel into the combustion space in fine spray. Excess fuel returns from the fuel injection pump through an overflow valve to the fuel tank. The overflow pipe between filter and injectors helps the automatic bleeding of the system.

The fuel system is equipped with a pressure sensor that alarms before interference has developed. An option the pre-filter can be equipped with a see-trough water trap and with an electronic water in fuel sensor.

https://truckmanualshub.com/

A. Bleeding the fuel system

Note! This fuel system bleeds automatically small amounts of air bubbles from the filter and the pump when the engine is running. However, bleed the system always, when the fuel filters have been replaced or fuel has run out during driving.

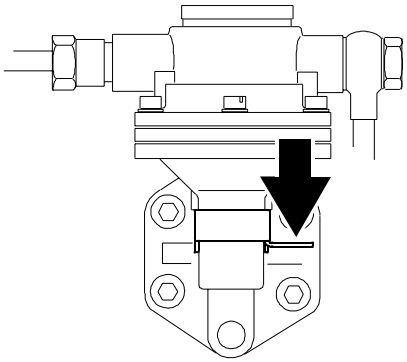

1. Pump by hand the fuel feed pump lever. If the pumping seems to be ineffective, turn the engine a little so that the camshaft cam is not at the feed pump lifter.

2. Start the engine to idling speed, do not race. If the engine is not starting, loosen the connection of the bleeding pipe from the fuel filter to the injector. Pump with the hand pump until fuel flows out of the connection. Tighten the connection and clean off the over flown fuel.

3. Start the engine and make sure that there are no leaks.

B. Measuring the fuel feed pressure

1. Clean the pre-filter and the fuel filter and related fuel pipes from outside.

2. Disconnect the pressure switch from the fuel filter and connect the gauge instead (the thread is M14x1,5).

3. Run the engine at low idling for a while and compare the gauge reading with the given value (0,48 bar, minimum 0,20 bar at max. rpm).

Note! If the measured pressure is below the given value, cause may be:

- Clogged fuel filters.
- Malfunction of the feed pump.
- Suction piping clogged or leaking air.
- Empty fuel tank or unsuitable fuel (e.g. summer fuel in the winter).

C. Removing the fuel injection pump

1. Clean the injection pump and surroundings.

2. Remove the delivery pipes, the throttle cable wire from the revolution lever and the stop solenoid wire from the pump. Fit protective caps on the delivery pipe unions.

3. Remove the injection pump gear cover. Rotate the crankshaft until the piston of the 1st cylinder reaches top dead centre in the compression stroke.

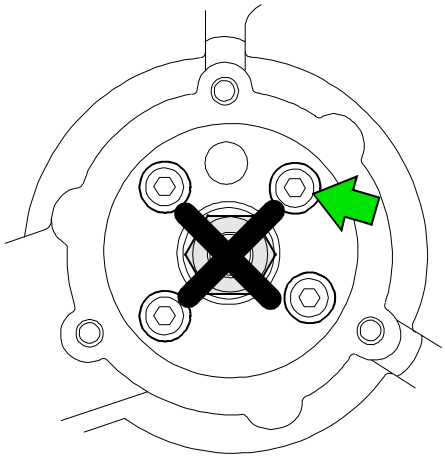

4. Unscrew the retaining screws of the gear (4 pcs) and retaining nuts of the pump (3 pcs). Remove the injection pump.

Note! If the front cover of the timing housing has not been removed, the pump gear and the idler gear will stay in gear connection with each other.

Note! Do not remove the coupling flange from the axle of the pump.

D. Fitting the fuel injection pump

The injection pump is fitted in position according to the static basic advance (**5°**) shown using the mark on the crank shaft pulley / damper.

1. Turn the crankshaft to a position where the 1st cylinder piston reaches its compression stroke top dead centre. Turn the crankshaft backwards until the mark on the pulley passes the timing indicator. Then rotate the crankshaft slowly in running direction until the mark on the pulley is at the point of the timing indicator.

2. Clean the conic connection between the shaft of the injection pump and coupling flange and fit the separate coupling flange on the shaft of the injection pump. **Do not tighten the nut!**

https://truckmanualshub.com/

3. Check the condition of the o-rings between the pump and the timing housing. Change the o-rings if needed. Lubricate the o-rings and fit the assembling ring into the timing housing.

Note! Use gasket sealant on the surfaces against the timing housing.

4. Place a new seal on the pump flange. Push the injection pump into place on the timing gear housing.

5. Fit the gear to the coupling flange of the injection pump. Tighten the screws to **35 Nm**.

6. Lock the crankshaft and tighten the nut of the coupling flange to **92,5 Nm**. Fit the pump gear cover.

Note! The shaft of the injection pump is locked by a lock screw. If the shaft slips when tightening the flange nut, the injection pump will be damaged and must be replaced!

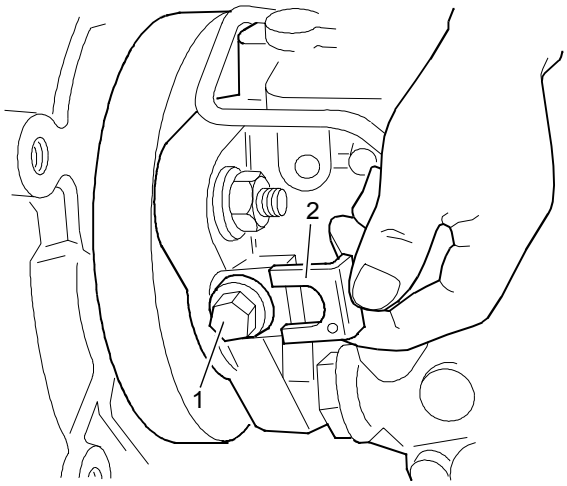

7. Open the lock screw (1) a little and fit the plate (2), that came with the pump, under the screw. Tighten the screw to **12,5 Nm**. The shaft of the injection pump is free now.

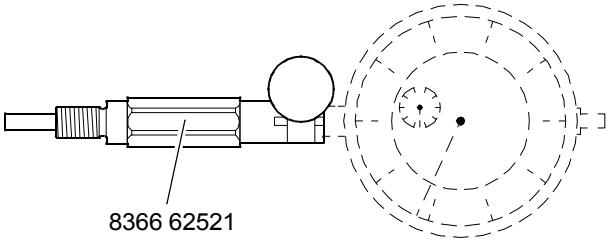

Setting tool for the injection pump. Adapter 8366 62521 and dial gauge (1/100 mm).

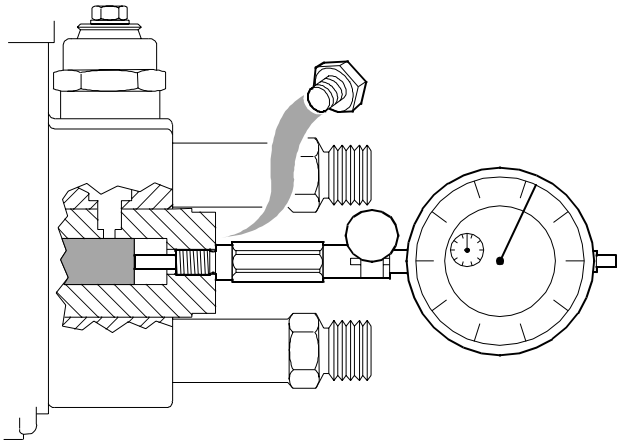

8. Remove the screw (tool size 12 mm), in the middle of the back of the pump and fit the dial gauge into position.

9. Rotate the crankshaft opposite to running direction until the movement of the dial gauge stops (piston of the injection pump is in bottom dead centre). Set the dial gauge to zero.

10. Rotate the crankshaft slowly in running direction until the mark on the crankshaft pulley is at the point of the timing indicator. Read the distance of the injection pump piston from the dial gauge, it should be **0,30 mm**. If the dial gauge shows different distance, turn the injection pump, depending on the need and check again.

11.When distance of the pump piston is correct, tighten the retaining nuts of the injection pump.

12. Fit the injection pipes and check that they are in correct angles to the unions. Tighten the delivery pipe attaching nuts to **25 Nm**. **Do not overtighten!**

13. Fit the fuel pipes, throttle cable and the electric wire.

14. The fuel system bleeding starts with opening the fuel return pipe connection and pumping with the hand pump until the injection pump housing is filled with fuel. Tighten the connection. Open the injection pipe connections from the injector end (only about half turn, not more). Crank the engine for about 5 seconds, until fuel comes out from every injection pipe. Tighten the injection pipe connections and start the engine. Clean off the over flown fuel.

Note! If needed, a vacuum pump can be connected to the fuel return connection. The pump sucks the fuel from the tank via the injection pump. Connect the return pipe when fuel flows out from the return connection.

https://truckmanualshub.com/

Bosch VP 30 and VP 44 rotary pump

Technical data

Injection pump

Type	Bosch VP 30 or VP 44 rotary pump
Fitting position º BTDC (static):	
- VP 30 pump in 44-, 66- and 74-engines	30º
- VP 44 pump in 74-engines	26º
- VP 44 pump in 84-engines	28º
Supply voltage	12 V
Minimum voltage, at full load	7 V
Minimum voltage, at idle speed	6 V
Current drain (constant)	max. 8 A
Direction of rotation from the engine front	Clockwise
Injection order:	
- 44-engines	1 - 2 - 4 - 3
- 66-, 74- and 84-engines	1 - 5 - 3 - 6 - 2 - 4

Fuel system

Fuel	The fuel must be according to norm EN 590
Fuel filters:	
- Pre-filter	Stanadyne 30 µ, element no. 8368 66575
- Fuel filter	Stanadyne 5 µ, element no. 8368 66577
Feed pump	Electric type, with pre-filter
Supply voltage	12 V
Current drain	max. 6 A
Feed pressure at idle speed	1,0…1,2 bar, minimum 0,7 bar

Tightening torques

Injection pump retaining nuts M8 / VP 30	30 Nm
Injection pump retaining nuts M10 / VP 44	50 Nm
Injection pump gear retaining screws	35 Nm
Injection pump overflow valve	27 Nm
Delivery pipe attaching nut to pump	25 Nm

https://truckmanualshub.com/

Fuel system, description

The Fortius series engines are using a solenoid controlled Bosch injection pump. The model of the rotary type injection pump is either VP 30 or VP 44, depending on the power range.

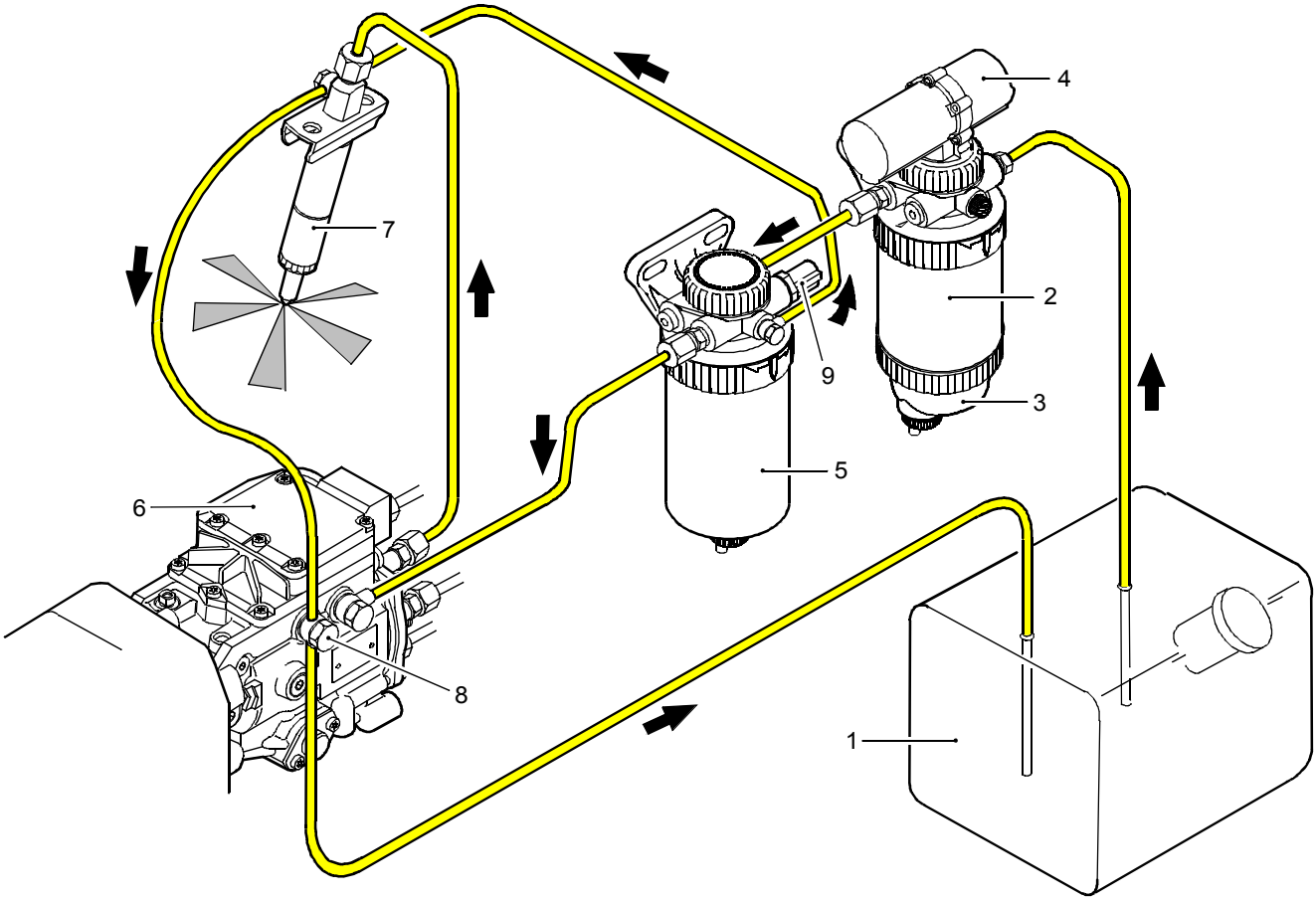

Fuel system (injection pump Bosch VP 44)

1. Fuel tank
2. Pre-filter
3. Water separator (optional)
4. Feed pump
5. Fuel filter
6. Injection pump
7. Injector
8. Overflow valve
9. Feed pressure sensor (0,05 - 0,2 bar)

The fuel is pumped by electric feed pump from the tank via a pre-filter, trough the filter to the injection pump. The injection pump forces the fuel into the injector that feeds fuel into the combustion space in fine spray. Excess fuel returns from the fuel injection pump through an overflow valve to the fuel tank. The overflow pipe between filter and injectors helps the automatic bleeding of the system.

The fuel system is equipped with a pressure sensor that alarms before interference has developed. An option the pre-filter can be equipped with a see-trough water trap and with an electronic water in fuel sensor.

https://truckmanualshub.com/

A. Bleeding fuel system

The Fortius series engines have an automatic fuel bleeding system. Changing the fuel filters or lack of fuel does not require any separate bleeding. It is enough to switch on the current and let the electric feed pump work for about 30 seconds before start.

Note! In connection with service- or repair work (like change of injection pump), there might be a situation where bleeding the air requires special measures. In this case open the injection pipe connections from the injector end (only about half turn, not more). Let the feed pump work for about 30 - 45 seconds and crank the engine about 5 seconds, until fuel comes out from every injection pipe. Retighten connections and start the engine. Clean off the over flown fuel.

B. Measuring fuel feed pressure

1. Clean up the pre-filter and the fuel filter and related fuel pipes from outside.

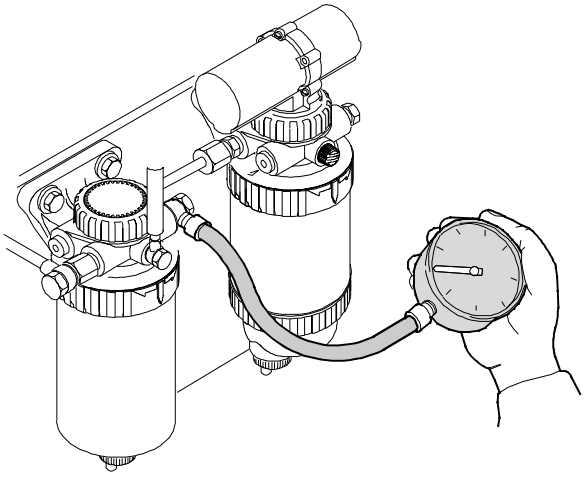

2. Disconnect the pressure switch from the fuel filter and connect the gauge instead (the thread is M14x1,5).

3. Run the engine at low idling for a while and compare the gauge reading with the prescribed value (1,0…1,2 bar, minimum 0,7 bar).

Note! If the measured pressure is below the prescribed value, this may be caused by:

- Clogged fuel filters.
- Malfunction of the feed pump.
- Suction piping clogged or leaking air.
- Empty fuel tank or unsuitable fuel (e.g. summer fuel in the winter).

C. Removing fuel injection pump

1. Disconnect the electric main switch. Clean up the injection pump and surroundings.

2. Disconnect the fuel delivery pipes and injection pipes. Fit protective plugs in the fuel pipe connections.

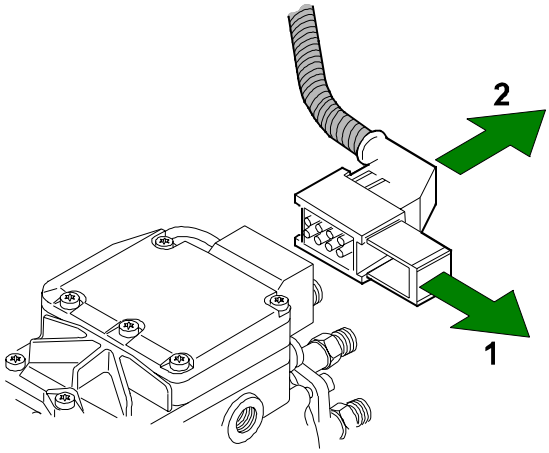

3. Pull up the lock of the electric connector (1) and disconnect the connector (2). Be careful with not touching the terminals in the connector.

4. Remove the injection pump gear cover. Rotate the crankshaft until the piston of the 1st cylinder reaches its top dead centre in the compression stroke.

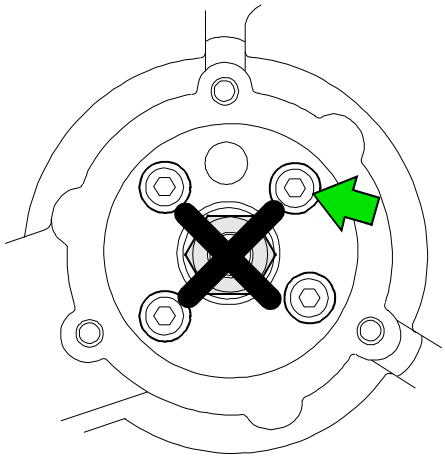

5. Unscrew the retaining screws of the gear (4 pcs) and retaining nuts of the pump. Remove the injection pump.

CAUTION! NEVER OPEN THE NUT OF THE INJECTION PUMP HUB. The hub can be fitted back only in test bench.

Note! If the front cover of the timing housing has not been removed, the gear of the VP 30 pump and the idler gear will stay in gear connection with each other. The gear of the VP 44 pump can be removed, ensure therefore the alignment of the timing marks or make your own marks before removing the gear.

D. Fitting fuel injection pump

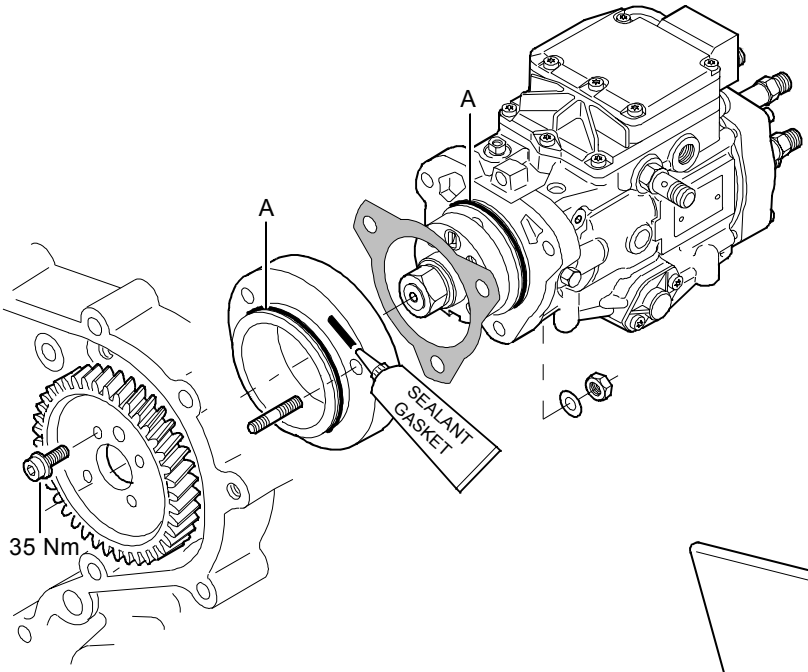

Injection pump VP 30 with mounting parts

A = O-ring seals

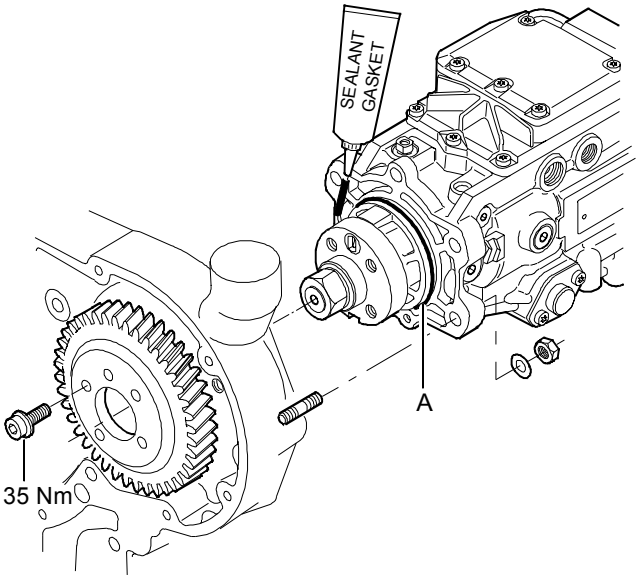

Injection pump VP 44 with mounting parts

A = O-ring seals

The injection pump is fitted in position according to the static basic advance shown using the mark on the crank shaft pulley / damper and using the special tool that focuses the position of the injection pump.

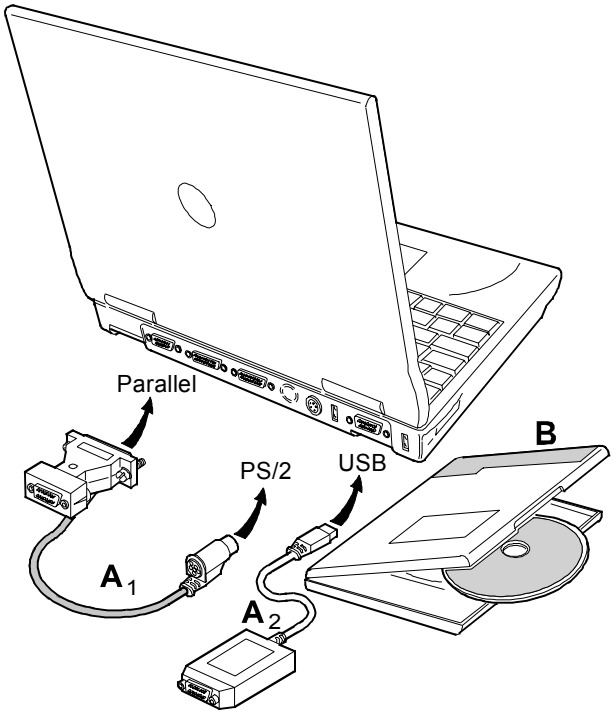

Note! Changing a injection pump is possible to completion by using SisuEEM2 service tool.

This service tool that includes a CAN adapter (A_1 or A_2) and a WinEEM2s program (B) is used with a laptop. See details from the chapter "**Engine Control System**".

Also an extension cable (D9 fully connected pin to pin connector) is available and an adapter to the vehicle connector. See details from the chapter "**Engine Control System**".

The sale and supply of the service tool and the additional parts is done by Sisu Diesel Inc. Service Department.

https://truckmanualshub.com/

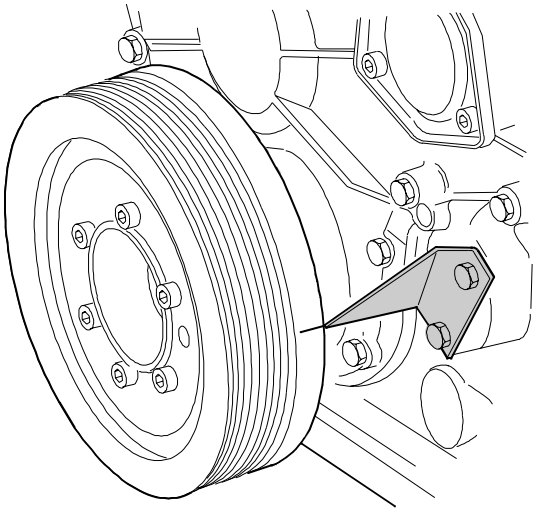

1. Turn the crankshaft to a position where the 1st cylinder piston reaches its compression stroke top dead centre. Then turn the crankshaft backwards until the mark on the pulley passes the timing indicator. After that rotate the crankshaft slowly to running direction until the mark on the pulley is at the point of the timing indicator.

Note! Pulley / vibration damper delivered as spare part do not have installation mark of the injection pump, see instruction **5 H**.

2. Check the condition of the o-rings between the pump and the timing housing. Change the o-rings if needed. Lubricate the o-rings and fit the assembling ring (not used with VP 44 pumps in 74-engines) into the timing housing.

Note! Use gasket sealant on the surfaces against the timing housing.

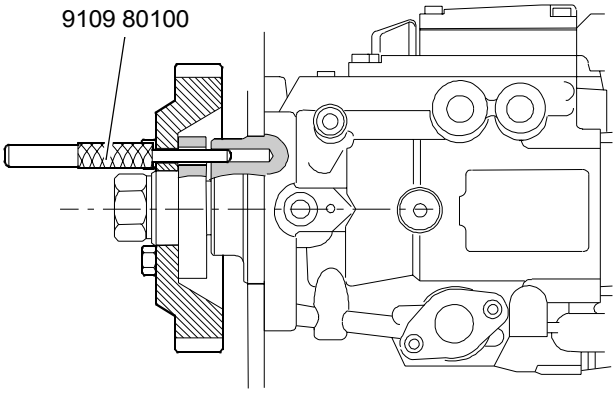

3. Fit the injection pump in position, so that timing pin 9109 80100 goes easily into the inspection hole through the injection pump gear and finally to the pump housing. Ensure at the same time that the timing marks on the gears are against each other. See types of marking from the chapter **9**. 33-, 44-, 66- and 74-engines point **C** and 84-engines point **B**.

4. Tighten the retaining screws and nuts of the injection pump and the gear. Pull out the timing pin and fit the pump gear cover.

5. Fit the pipes without tension and check that they are at right angles to the union. Tighten the delivery pipe attaching nuts to **25 Nm**. **Do not overtighten!**

6. Fit the other detached parts.

7. Bleed the fuel system, see instruction **13 A**.

Note! If the injection pump has been changed, the EEM 2 engine control system has to be fed with the new serial numbering of the pump using the SisuEEM2 service tool, in the order shown in the picture below. See more specifically in the service tool manual.

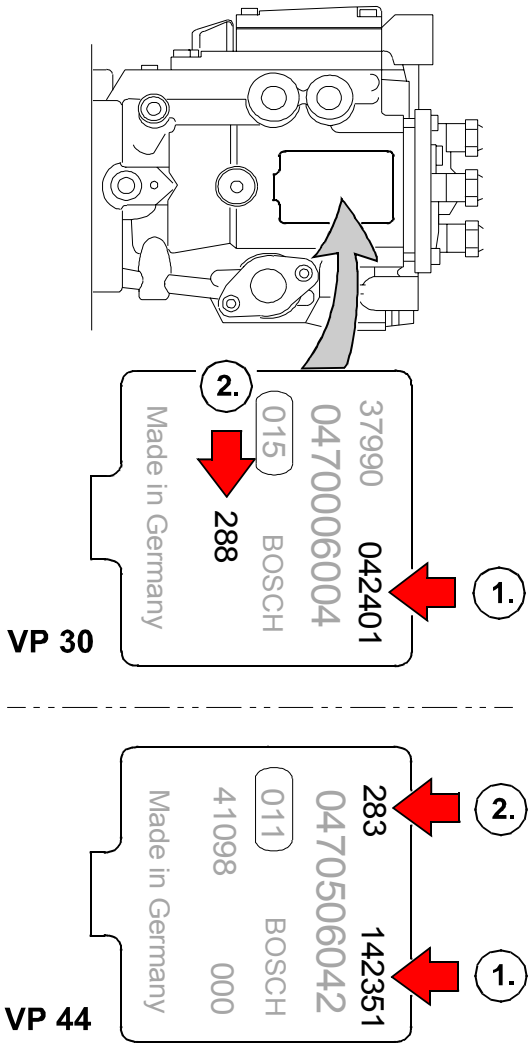

https://truckmanualshub.com/

E. Fuel quality requirements

	Requirement	Test method
Density, +15°C	0,82...0,84 kg/dm^3	EN ISO 3675:1998, EN ISO 12185
Viscosity, +40°C	2,0...4,5 mm^2/s	EN ISO 3104
Sulphur content	max. 0,005 p-%	EN ISO 14596:1998
Cetane number	min. 51	EN ISO 5165:1998
Water content	max. 200 mg/kg	prEN ISO 12937:1996
lubricity/HFRR	max. 460 µm	ISO 12156-1

The fuel must be according to norm EN 590.

Engine output depending on fuel quality

Different fuel qualities like temperature, density and viscosity affect the actual output of the engine. Our outputs are specified by fuel with a density of 0.84 kg/dm^3 and specific heat rate of 42,7 Mj/kg at a fuel temperature of +15°C.

The correction in % caused by the change of fuel qualities is seen in the attached figures.

FIG. A. Engine output dependence on fuel temperature. +35°C is the reference temp (correction 0%). The fuel temperature is not only a function of ambient conditions but also varies according to the fuel system of the application (tank size and location, return flow etc.).

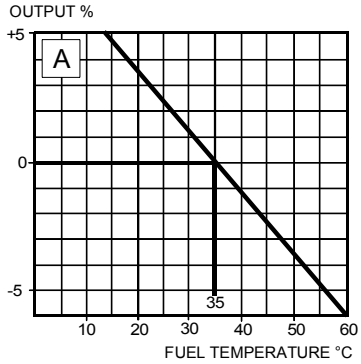

FIG. B. Engine output dependence on fuel density. Normal value is 0,84 kg/dm^3 at +15°C.

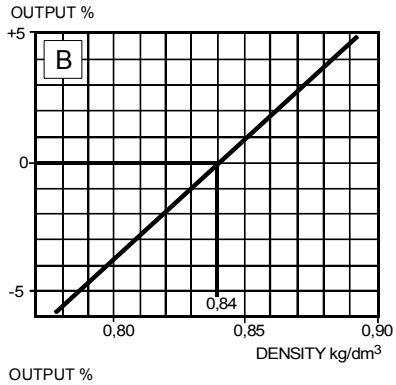

FIG. C. Engine output dependence on fuel viscosity. Normal value is 3 cSt at +20°C.

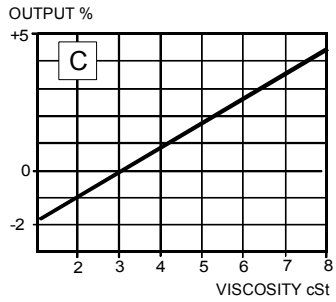

Note fig. B and C only if the fuel quality is changed.

In fig. A there are all the quality dependencies caused by the change of the temperature. The fuel density and viscosity can be seen in the produce declaration given by the manufacturer.

The output correction is made as follows: Correction percentages from figures A, B and C are summed up. The given rated power is then corrected with the resulting percentage.

https://truckmanualshub.com/

14. ENGINE CONTROL SYSTEM EEM 2

Fortius series engine fulfils the emission requirements set by authorities (EU97/68/EC Stage 2 and EPA 40 CFR 89 Tier 2). The manufacturer guarantees that all engines of this type are equivalent to the engine that is officially approved. This must be noticed especially when performing periodical maintenance, follow carefully the service schedule. Any adjusting and repair work for the injection system or the engine control unit can only be made by a representative authorized by Sisu Diesel Inc. When performing any service or repair work use only original SisuDiesel spare parts. Inadequate or delayed service and the use of other than original SisuDiesel spare parts invalidates the responsibility of Sisu Diesel Inc. on the fulfilment of the emission requirements.

Construction of the EEM 2

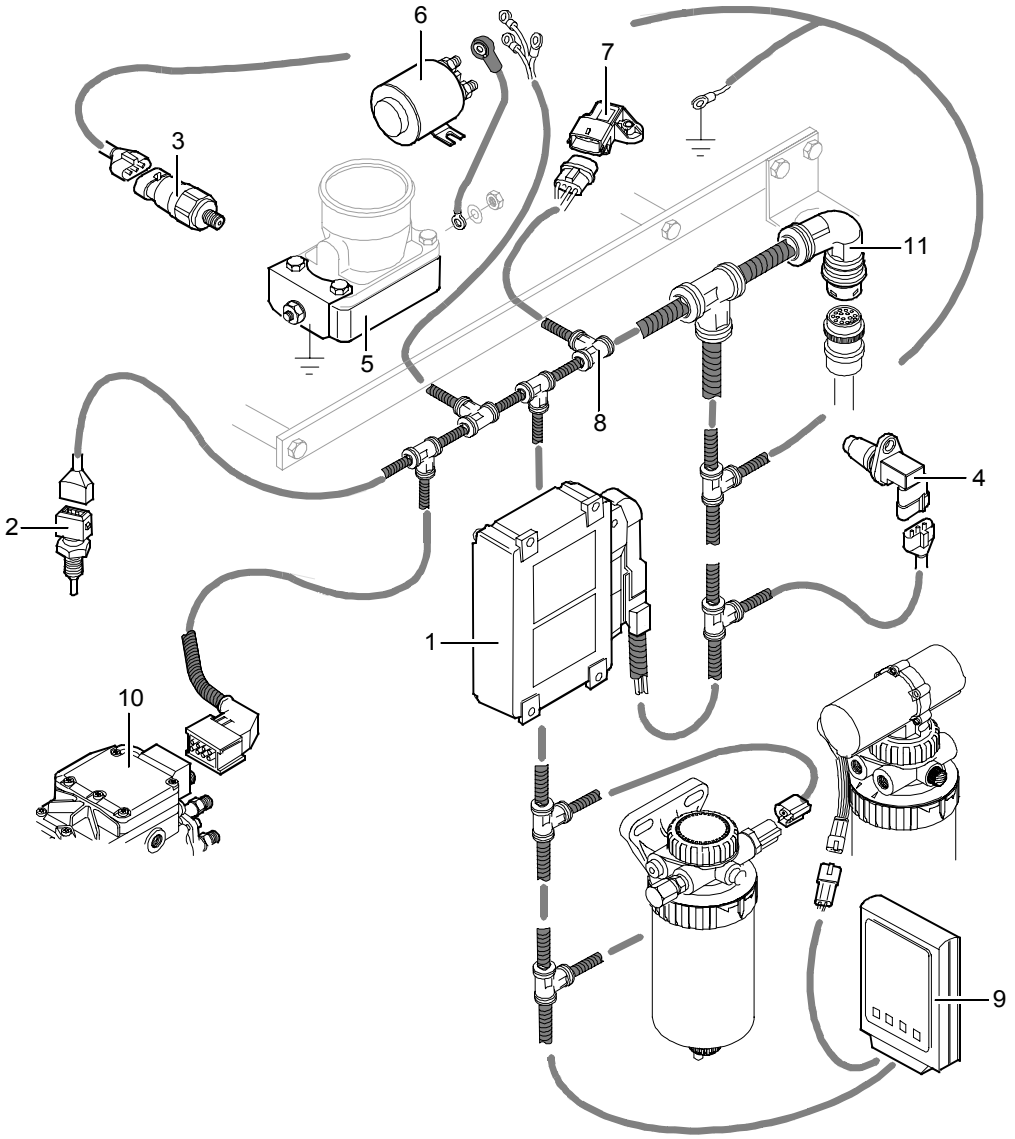

Parts of engine control system

1. Electronic control unit (ECU)
2. Coolant temperature sensor
3. Oil pressure sensor
4. Speed sensor
5. Electric intake air heater
6. Solenoid for intake air heater
7. Boost pressure sensor
8. Wiring set of engine
9. Voltage reducer 24 V > 12 V
10. Pump control unit (PCU)
11. Vehicle connector

https://truckmanualshub.com/

EEM 2 Engine Control System, description

The basic function of the electric control of the engine is continuos adjustment and measuring of the load, quantity of fuel and rotating speed. Other additional function are for example cold start automatics and engine protecting automatics. The central unit of the electric control receives continuously signals from sensors that measure different functions in the engine like rotating speed, oil pressure, turbo pressure and coolant temperature. Through the CAN bus the central unit gets information from the control unit of the injection pump and from the cabin about the need of load for the engine. The EEM 2 unit makes it also possible to have a wide diagnostics through code numbers or a diagnostic light.

Service tool of EEM 2 system

The EEM 2 engine control system can only be ruled by this service tool with additional parts.

This service tool, used together with a lap top, can be used for adjusting the EEM 2 system, like running speed adjusting, running hours adjusting (only adding is possible) and throttle calibration. As well following the fault diagnostics, updating software and other service related purposes, like reading of running- and shutdown memory are easy to do.

Repairing work, like changing a injection pump or electronic control unit (ECU), is possible to completion by using SisuEEM2 service tool.

In addition, the service tool can be used to clear up the stopping requests made, not depending of the engine, for example power cuts or under voltage (like earth-problems, power needed when engine running ~10 A and voltage >7 V) in the machine and the stopping requests caused by the gear box.

The service tool includes a license number. Each time an engine has been connected to the service tool, for adjustments or any other reason, this license number is found in the EEM 2 system.

The sale and supply of the service tool and the additional parts is done by Sisu Diesel Inc. Service Department.

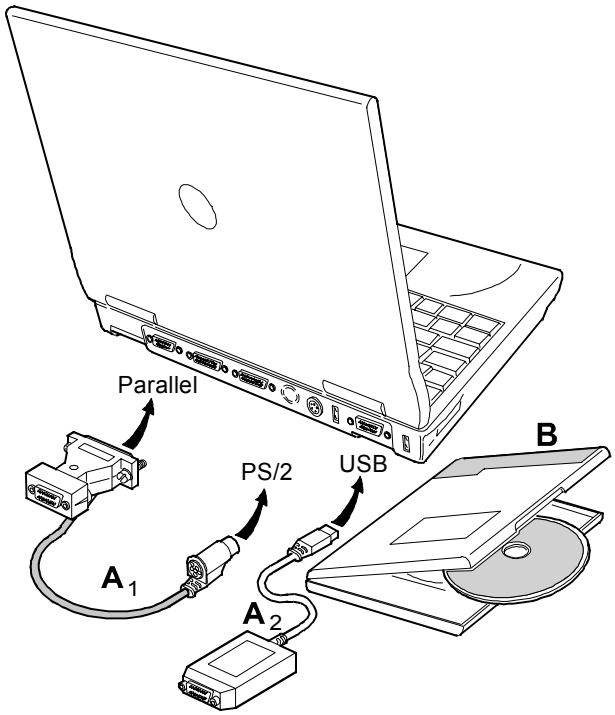

8366 62478 SisuEEM2 service tool
A1 CAN adapter for connection via parallel port
B WinEEM2s program

8366 62493 SisuEEM2 service tool
A2 CAN adapter for connection via USB port
B WinEEM2s program

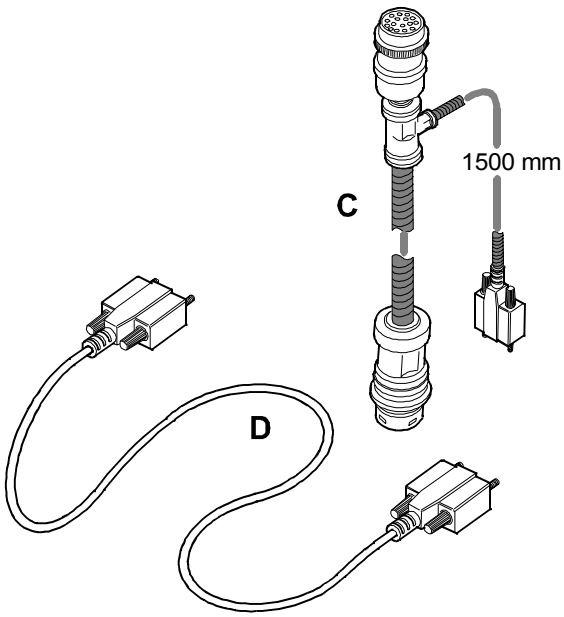

Also an adapter to the vehicle connector and an extension cable (D9 fully connected pin to pin connector, 5 m) is available.

C 8368 62480 Adapter for vehicle connector
D 8368 62483 Extension cable L = 5 m

https://truckmanualshub.com/

The service tool can be connected using the adapter if the engine is using any of following wiring harness:

- Order no. 8367 66799
- Order no. 8368 66719
- Order no. 8368 66795
- Order no. 8368 66955
- Order no. 8368 67071

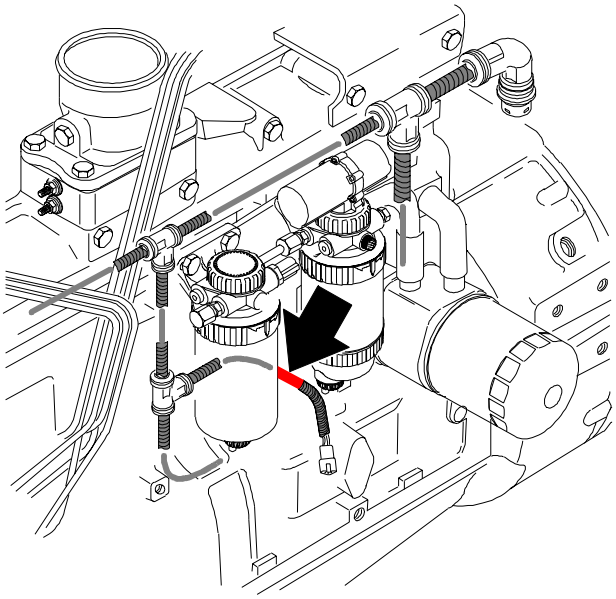

Order number of wiring harness is printed on red label as shown in picture (optional water detector connector wire).

A. Changing of Control Unit (ECU)

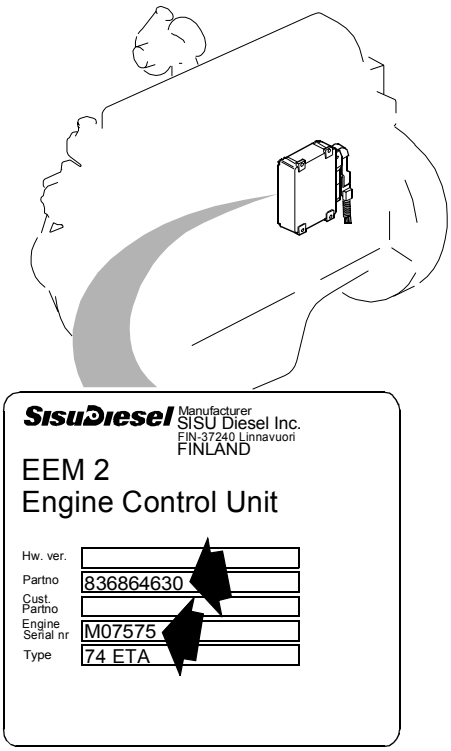

Note! The specification of the application and the engine serial number are indicated on the type plate of the EEM 2 control unit. These numbers must always be stated when ordering a control unit.

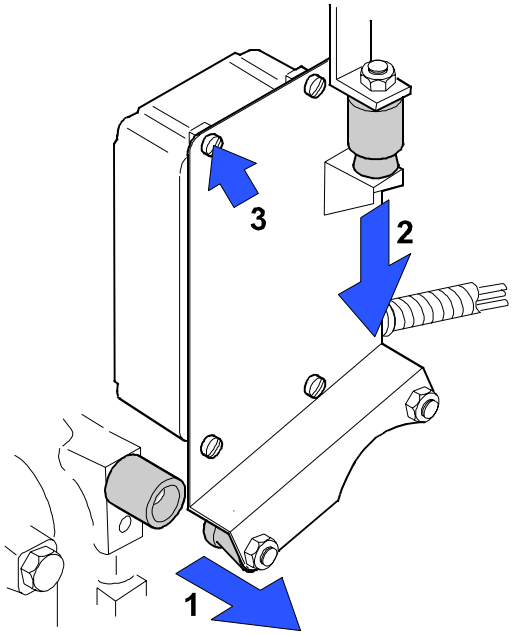

1. If the central unit is attached to the engine, pull the fixing stand first out from the rubber mounts (1), then push the stand downward (2). Finally loosen the tightening screws (3).

https://truckmanualshub.com/

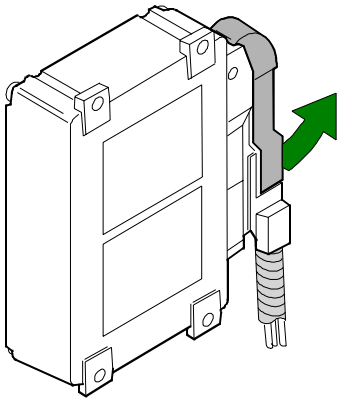

2. Loosen the multi pin connector from the central unit, opening the locking latch. Be careful with not touching the terminals in the connector.

3. Attach the new central unit in opposite order.

Note! After changing of the central unit, the EEM 2 engine control system has to be fed with the new serial numbering of the pump using the SisuEEM2 service tool, in the order shown in the picture below. See more specifically in the service tool manual.

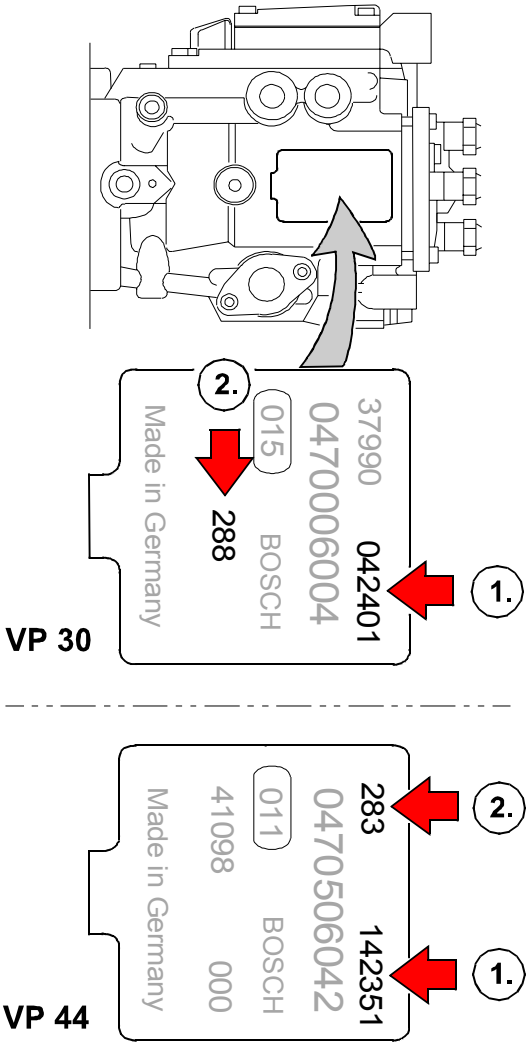

B. Sensors of Engine Control System

Boost pressure sensor

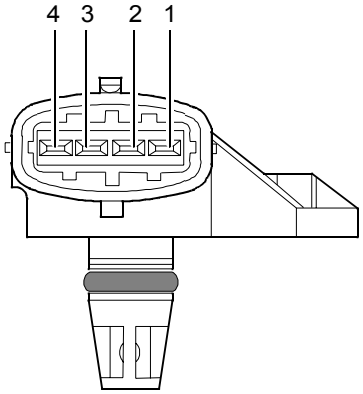

1. Ground
2. Temperature signal
3. +5 V
4. Pressure signal

Location: Inlet manifold
Screw M5 / 3,3 Nm

Speed sensor

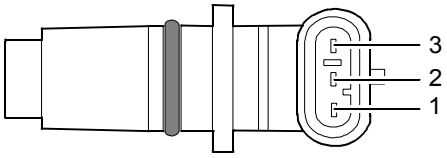

1. Ground
2. Rpm signal
3. +12 V

Location: Cylinder block, left side
Screw M8 / 25 Nm
O-ring, order no. 6146 01524

Oil pressure sensor

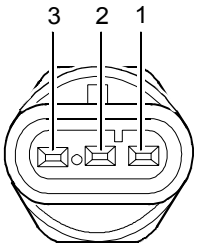

1. Ground
2. Pressure signal
3. +5 V

Location: Cylinder block, right side
Thread M10x1 / 25 Nm
Seal ring, order no. 6158 71016

https://truckmanualshub.com/

15. ELECTRICAL SYSTEM

A. Alternators

Bosch N1 28 V 10/80 A (SisuDiesel no. 8353 39751)

Nominal voltage	24 V
Output	
1500 r/min	.16 A
2700 r/min	.53,5 A
6000 r/min	.79 A
Min. slip ring diameter	26,8 mm
Brush length when new	19 mm
Min. brush length	5 mm
Rotor resistance	7,5...8,2 ohm
Stator resistance	0,057...0,062 ohm
Regulating voltage	28 V

Tightening torques:

Shaft nut	55 Nm
Assembling screws	4,1...5,5 Nm
Regulator screws	1,6...2,3 Nm
Joint B- (M6)	4,8...6,8 Nm
Joint W (M5)	2,7...3,8 Nm
Joint D+ (M4)	1,6...2,3 Nm
Joint B+ (M8)	7,5...8,0 Nm

Bosch N1 28 V 0/100 A (SisuDiesel no. 8353 40374)

Nominal voltage	24 V
Output (warm generator, testing voltage 26 V)	
2000 r/min	.26 A
3500 r/min	.72 A
7000 r/min	.94 A
Min. slip ring diameter	26,8 mm
Brush length when new	19 mm
Min. brush length	5 mm
Rotor resistance	7,5...8,2 ohm
Stator resistance	0,038...0,041 ohm
Regulating voltage	28,5 V

Tightening torques:

Shaft nut	70 Nm
Assembling screws	4,1...5,5 Nm
Regulator screws	1,6...2,3 Nm
Joint B- (M6)	4,8...6,8 Nm
Joint W (M5)	2,7...3,8 Nm
Joint D+ (M4)	1,6...2,3 Nm
Joint B+ (M8)	7,5...8,0 Nm

https://truckmanualshub.com/

Bosch NC 14 V 150 A (Sisu Diesel no. 8368 64048)

Nominal voltage	12 V
Min. slip ring diameter	14,9 mm
Brush length when new	12,5 mm
Min. brush length	5 mm

Tightening torques:

Shaft nut	60...70 Nm
Joint B+ (M8)	10 Nm
Joint D+ (M5)	5 Nm

Iskra AAK 3369 14 V 65 A (SisuDiesel no. 8366 66723)

Nominal voltage	12 V
Output (test voltage 13 V)	
2000 r/min	38 A
4000 r/min	61 A
6000 r/min	65 A
Charge begins	1150 r/min
Max. allowed speed	12 000 r/min
Min. slip ring diameter	27 mm
Min. brush length	5 mm
Rotor resistance	2,70...2,97 ohm
Stator resistance	1,60...1,80 ohm

Tightening torques:

1. Shaft nut	50...70 Nm
2. Joint B+ (M6)	4,2...6,0 Nm
3. Joint D+ (M5)	2,7...3,8 Nm
4. Joint W (M 5)	2,7...3,8 Nm

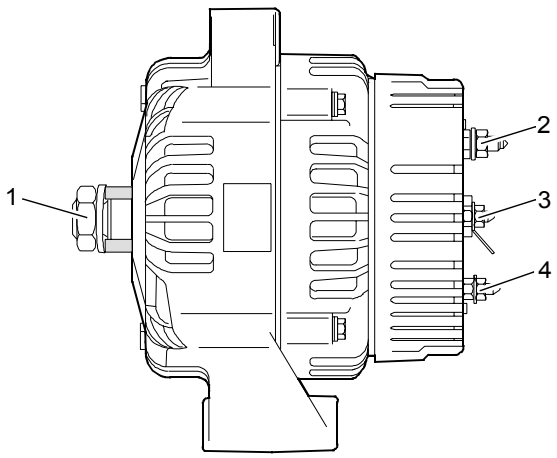

https://truckmanualshub.com/

Iskra AAK 5363 14 V 95 A (SisuDiesel no. 8366 66720)

Nominal voltage	12 V
Output (test voltage 13 V)	
2000 r/min	50 A
4000 r/min	84 A
6000 r/min	94 A
Charge begins	1100 r/min
Max. allowed speed	15 000 r/min
Min. slip ring diameter	15,3 mm
Min. brush length	5 mm
Rotor resistance	2,70...2,97 ohm
Stator resistance	0,33...0,36 ohm

Tightening torques:

1. Shaft nut	50...70 Nm
2. Joint B+ (M6)	4,2...6,0 Nm
3. Joint D+ (M5)	2,7...3,8 Nm
4. Joint W (M 5)	2,7...3,8 Nm

B. Starters

Iskra AZJ3319 12 V 3 kW z10 (SisuDiesel no. 8366 62073)

Values, unloaded	
Running speed	8000 r/min
Amperage	90 A
Values with armature locked	
Running speed	0 r/min
Amperage	1375 A
Torque	51 Nm
Brush length (new)	23 mm
Min. brush length	13 mm
Brush spring tension	30...35 N

Tightening torques:	
Studs (M6)	5,8 Nm
Screws on solenoid (M5)	3,2 Nm
Screws on solenoid (M6)	6,0 Nm
Pole shoes (M10)	37 Nm
Brush holder	3,2 Nm
Lever pin on engagement lever	12 Nm
Contact screws on solenoid switch (M8)	8,5 Nm
Contact screws on solenoid switch (M10)	13 Nm

Iskra AZJ3256 24 V 4 kW z11 2-pole (SisuDiesel no. 8366 64355)

Values, unloaded	
Running speed	10 000 r/min
Amperage	80 A
Values with armature locked	
Running speed	0 r/min
Amperage	1200 A
Torque	70 Nm
Brush length (new)	23 mm
Min. brush length	13 mm
Brush spring tension	30...35 N

Tightening torques:	
Studs (M6)	5,8 Nm
Screws on solenoid (M5)	3,2 Nm
Screws on solenoid (M6)	6,0 Nm
Pole shoes (M10)	37 Nm
Brush holder	3,2 Nm
Lever pin on engagement lever	12 Nm
Contact screws on solenoid switch (M8)	8,5 Nm
Contact screws on solenoid switch (M10)	13 N

https://truckmanualshub.com/

16. OPTIONAL EQUIPMENT

A. Compressor (Bendix)

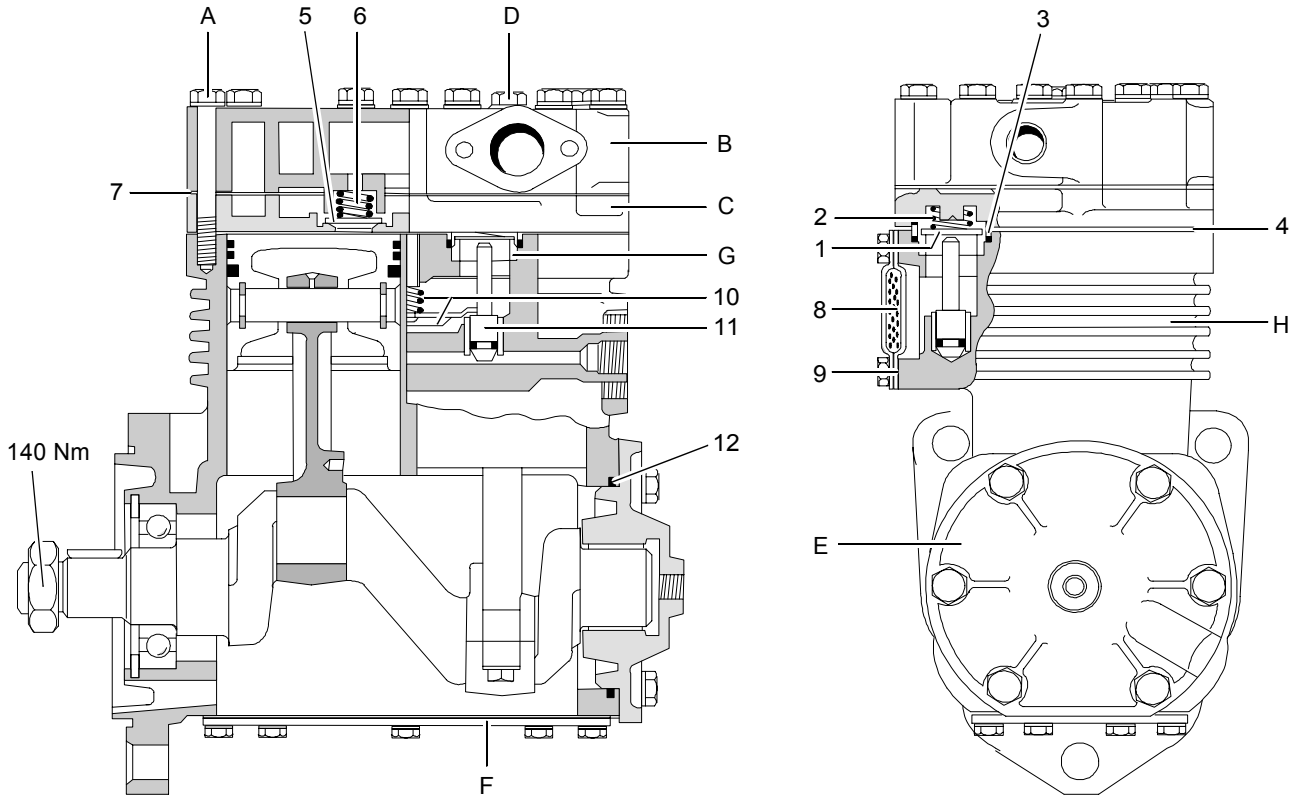

A. Cylinder head retaining screws
B. Cylinder head
C. Valve plate
D. Ventil plate retaining screws
E. Cover
F. Bottom cover
G. Valve seat
H. Crankcase

1. Inlet valve heads
2. Spring
3. Valve guide
4. Gasket
5. Delivery valve heads
6. Spring
7. Gasket
8. Air filter
9. Gasket
10. Unloader saddle and spring
11. Piston
12. O-ring

Note! The numbered parts (1...12) are included in the repair kit.

Disassembly

1. Remove the retaining screws (A, 11 pcs.), take off the cylinder head and the valve plate. Remove the inlet valve heads, springs, valve guides and gasket.

2. Loosen the retaining screws (D, 2 pcs.) and detach the cylinder head from the valve plate. Remove the delivery valve heads, springs and gasket.

3. Remove the retaining screws of the air filter (if assembled) and take off the filter and the gasket.

4. Remove the unloader spring and saddle as well as the pistons and the o-rings seals.

5. If necessary, remove the rear end cover and its o-ring seal and the bottom cover with its gasket.

Note! Do not try to remove the valve seats. They are pressed in during manufacture and are integral parts of the crankcase.

https://truckmanualshub.com/

Inspection

1. Thoroughly clean all removed parts. Ensure that all air and water passages are clear. Clean off any carbon from the piston heads and the cylinder top parts.

2. Check the condition of the inlet and delivery valve seats. Only slight, even wear is permitted. If the delivery valve seats show considerable wear, renew the valve plate. If the inlet valve seats are excessively worn, replace the crankcase. You can also replace the inlet valve seats, but then you need to rebore the cylinders after the new seats have been fitted.

Note! There are two oversize pistons supplied for the compressor. The oversize are 0,254 mm and 0,508 mm. Bore the cylinders then to the dimensions ø 75,254 mm or ø 75,508 mm.

3. Ensure that the new unloader pistons are a good sliding fit in their guides. If the guides are appreciably worn, renew them.

4. Check the bearings for wear and replace them, if necessary. If needed, the slide bearing in the end cover can be renewed.

Reassembly

1. Fit a new o-ring seal in its groove and place the end cover in its position by pushing from the back. Tighten the cover retaining screws evenly to **17...23 Nm**.

2. Fit the bottom cover with a new gasket in place (if removed). Tighten the cover retaining screws evenly to **8...10 Nm**.

3. Insert new o-rings in the unloader pistons. Lubricate the o-rings and the piston guides lightly with e.g. silicone lubricant. Fit the pistons in their guides and reassemble the unloader saddle and spring. Ensure that the unloader mechanism moves freely.

4. Fit the delivery valve heads and springs into the valve plate. Insert a new gasket and fix the valve plate in the cylinder head. Tighten the screws to **5,4...8,1 Nm**. Ensure that the valve heads move freely. **DO NOT LUBRICATE THE VALVE HEADS OR SPRINGS!**

5. Fit the inlet valve head guides into their recesses with the cut-away sides towards their respective cylinder bores. Assemble the inlet valve heads and the springs. Fit the cylinder head using a new gasket. Tighten the retaining screws evenly to **20,3...23,0 Nm**. Ensure that the valve heads move freely. **DO NOT LUBRICATE THE VALVE HEADS OR SPRINGS!**

6. Attach the air filter (if necessary) and use a new gasket.
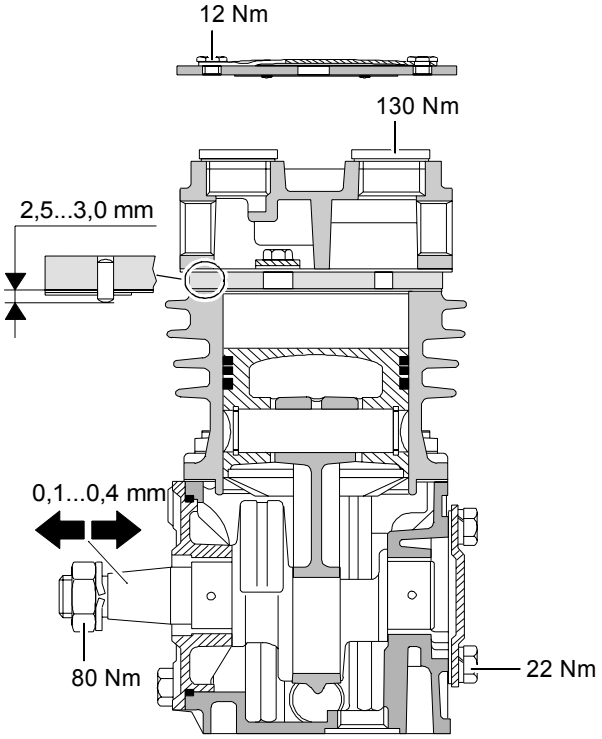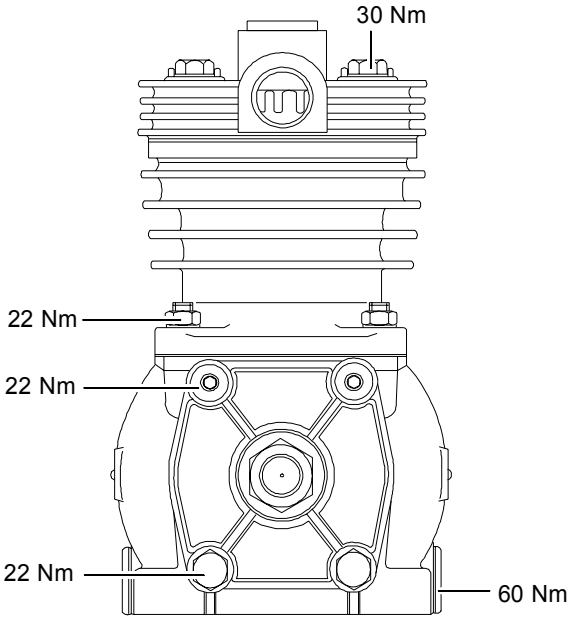
B. Compressor (Knorr)