https://truckmanualshub.com/

WORKSHOP MANUAL

LDW 442 CRS

AUTOMOTIVE

cod. 1-5302-838

UNI EN ISO 9001 - cert. n° 0446
ISO/TS 16949 - cert. n° 3792

LOMBARDINI SERVICE
A KOHLER COMPANY

https://truckmanualshub.com/

https://truckmanualshub.com/

LDW 442 CRS

AUTOMOTIVE

PREFACE

- Every attempt has been made to present within this service manual, accurate and up to date technical information.
  However, development on the **LOMBARDINI** series is continuous.
  Therefore, the information within this manual is subject to change without notice and without obligation.

- The information contained within this service manual is the sole property of **LOMBARDINI**.
  As such, no reproduction or replication in whole or part is allowed without the express written permission of **LOMBARDINI**.

Information presented within this manual assumes the following:

1 - The person or people performing service work on **LOMBARDINI** series engines is properly trained and equipped to safely and professionally perform the subject operation;

2 - The person or people performing service work on **LOMBARDINI** series engines possesses adequate hand and **LOMBARDINI** special tools to safely and professionally perform the subject service operation;

3 - The person or people performing service work on **LOMBARDINI** series engines has read the pertinent information regarding the subject service operations and fully understands the operation at hand.

- This manual was written by the manufacturer to provide technical and operating information to authorised **LOMBARDINI** after-sales service centres to carry out assembly, disassembly, overhauling, replacement and tuning operations.

- As well as employing good operating techniques and observing the right timing for operations, operators must read the information very carefully and comply with it scrupulously.

- Time spent reading this information will help to prevent health and safety risks and financial damage.
  Written information is accompanied by illustrations in order to facilitate your understanding of every step of the operating phases.

LOMBARDINI® SERVICE
A KOHLER COMPANY

https://truckmanualshub.com/

REGISTRATION OF MODIFICATIONS TO THE DOCUMENT

Any modifications to this document must be registered by the drafting body, by completing the following table.

Drafting body	Document code	Model N°	Edition	Revision	Issue date	Review date	Endorsed
CUSE/ATLO	1-5302-838	51188	**1°**	**00**	23-04-2009	23-04-2009	

https://truckmanualshub.com/

1 GENERAL INFORMATION ON SAFETY 9-12

WARRANTY CLAUSES 9
SERVICE GENERAL NOTES 9
GLOSSARY AND TERMINOLOGY 9
WARNINGS AND NOTES 10
SAFETY RULES 10
GENERAL SAFETY DURING OPERATING PHASES 11
ENVIRONMENTAL IMPACT 11
ENGINE ON ROTATING STAND - SAFETY PRECAUTIONS 12

2 TECHNICAL INFORMATION 13-27

GENERAL DESCRIPTION OF THE ENGINE 13
PROBLEMS AND RELATED CAUSES 14-15
DIMENSIONS 16
TECHNICAL SPECIFICATIONS 16-17
ENGINE AND MANUFACTURER IDENTIFICATION 18
PERFORMANCE GRAPH 18
LDW 442 CRS ENGINE MAINTENANCE (SCHEDULED AND UNSCHEDULED) 19
COOLANT 20
FUEL SPECIFICATIONS 20
LUBRICANTS 21
FUEL SUPPLY CIRCUIT 22-24
LUBRICATION CIRCUIT 25
COOLING SYSTEM - OPERATING PRINCIPLE 26-27

3 ENGINE ELECTRICAL CONTROL 30-51

ENGINE ELECTRONIC CONTROL SYSTEM 30
WIRING DIAGRAM OF THE ELECTRICAL/ELECTRONIC SYSTEM 31
CONTROL PANEL WIRING DIAGRAM 32-33
ENGINE ELECTRONIC CONTROL - WIRING DIAGRAM 34-35
ENGINE-VEHICLE DIALOGUE SYSTEM 36
ENGINE ELECTRONIC CONTROL - WIRING HARNESS 37
SERVICE WIRING DIAGRAM 38
SERVICE WIRING HARNESS 39
ENGINE WIRING DIAGRAM 40
ENGINE WIRING HARNESS 41
ACCESSORY WIRING DIAGRAM 42-43
CONNECTORS REQUESTED FOR INTERFACING WITH LOMBARDINI WIRING HARNESS 43
COMPONENTS OF ENGINE ELECTRONIC CONTROL SYSTEM 44-51
E.C.U. (Electronic control unit) 44
Control Unit Identification Plate 44
Installation Requirements 44
Hall-Effect Phase Sensor 45
Common Rail 45
Electronic Injectors 46
IMA Management 46
Water Temperature Sensor 47
Oil Pressure Sensor 47
Accelerator Potentiometer inside the Cabin (Pedal-Integrated) 48
Accelerator Potentiometre as an Accessory (Remote-Controlled via Accelerator Cable) 48
Glow Plugs 49
Glow Plug Absorption Curve 49
Speed Sensor 49
Electric Fan 50
Starter Motor 50
Alternator 51
External Alternator Load Curve Graph 51

https://truckmanualshub.com/

4 ENGINE STORAGE AND CONSERVATION 54-55

HANDLING AND LIFTING 54
ENGINE STORAGE 55
PROTECTIVE TREATMENT 55
PREPARING THE ENGINE FOR OPERATION AFTER PROTECTIVE TREATMENT 55

5 DISASSEMBLY 56-79

RECOMMENDATIONS FOR DISASSEMBLY 56

Alternator and Drive Belt 61
Alternator Drive Pulley 67
Balance Countershafts 77
Camshaft 72
Camshaft Cover 71
Connecting Rod Big End Caps 75
Coolant Outlet Flange and Thermostatic Valve 66
Crankcase 76
Crankshaft 77
Cylinder Head 73
Electronic Injectors 64
Engine Block 77
Engine Wiring Harness 56-58
Exhaust Manifold 59
Extracting the Electronic Injectors from the Cylinder Head 65
Flywheel 70
Fuel Distributor 63
Fuel Supply Hoses 61
Gear Cover 74
Glow Plugs 66
Head Gasket 74
High-Pressure Line between Injection Pump and Rail 64
High-Pressure Pump 71
Injection Pump Supply Hoses 62-63
Injector High-Pressure Hoses 64-65
Injector Return Line 62
Inlet Manifold 60
Intake System and Ducts 59-60
Oil Filter Cartridge 67
Oil Pump 75
Oil Pump Gear 74
Oil Sump 75
Overpressure Return Line 63
Piston 76
Rail 65
Rocker Arm Cover 68
Rocker Arms and Hydraulic Tappets 73
Service Wiring Harness 58-59
Speed Sensor 70
Starter Motor 67
Starter Motor Support Plate 70
Tightening Pulley 69
Timing System 68-69
Water Pump 69
Water Temperature Sensor 66

6 OVERHAULING AND TUNING UP 80-101

RECOMMENDATIONS FOR OVERHAUL AND TUNING 80
OVERHAULING THE CRANK MECHANISM AND CRANKCASE 80

Balance Countershafts 85
Camshaft 96

https://truckmanualshub.com/

Connecting Rod - Check of Axis Parallelism 86-87
Connecting Rod - Overhauling and Dimensional Check 85-86
Crankshaft 84
Crankshaft - Axial Clearance Check 84
Cylinder Head and Components - Overhauling 91
Cylinders 82
Glow Plug Specifications and Injector Protrusion 93
Head Gasket - Determining the Thickness 87
High-Pressure Pump 97-98
Hydraulic Tappet 95
Oil Pressure Relief Valve 90
Oil Pump 89
Phase Sensor Plate 97
Piston 81-82
Rings 83
Timing System 94
Timing System - Timing Angle Scheme 94
Valve Guides - Overhauling and Check 92
Valve Seats - Check 92
Valve Springs 91
Valves - Reassembly 93
Valves Guides and Housings 93
Vapour Recirculation Vent 88
Vapour Recirculation Vent - Operating Principle 88

7 REASSEMBLY 102-132

RECOMMENDATIONS FOR REASSEMBLY 102

Air Filter 128
Air Filter Duct - Vent Duct 127
Air Filter Support Bracket 127
Alternator 126
Alternator Drive Belt 126
Alternator Drive Pulley 117
Balance Countershafts 103
Camshaft 112
Camshaft Cover 112
Camshaft Seal Rings 113
Camshaft Toothed Pulley 115
Clearance Volume 110
Common Rail 121
Common Rail Fixing Columns - Tightening 122
Connecting Rod Cap 107-108
Coolant Inlet Flange 118
Coolant Outlet Flange 118
Crankcase - Fixing 105
Crankshaft 103
Crankshaft Seal Rings (Flywheel Side) 113
Crankshaft Seal Rings (Timing System Side) 114
Electronic Injector Fixing Bracket 119
Electronic Injectors 119
Electronic Injectors - Tightening 122
Engine Cylinder Head 111
Engine Wiring Harness - Installation 129-131
Exhaust Manifold 128
External Timing Belt Guard 117
Flywheel 110
Fuel Hoses 123
Gear Cover 114
Glow Plugs 119
High-Pressure Lines 121
High-Pressure Pump 120-121
Injector Fittings - Tightening 122
Injector Hose Fittings on Rail and Injection Pump Hose - Tightening 122
Injector Return Line 125

https://truckmanualshub.com/

Inlet Manifold 127
Internal Timing Belt Guard 114
Lower Crankcase - Half-Bearings 104-105
Oil Filter 117
Oil Pump - Lobes 104
Oil Pump - Plate 106
Oil Suction Pipe 108
Oil Sump 108
Piston - Connecting Rod- Gudgeon pin - Assembly 107
Rail 123-124
Rocker Arm Cover 123
Rocker Arms and Hydraulic Tappets 111
Service Wiring Harness - Installation 128-129
Speed Sensor 109
Speed Sensor - Air gap 110
Starter Motor 125
Starter Motor Support Plate 109
Synchronous Timing Belt - Installation 116
Synchronous Timing Belt - Tensioning 116
Thermostatic Valve 118
Tightening Pulley 114
Timing Belt Setting 116
Timing System Drive Pulley 115
Upper Crankcase - Crankshaft Half-Bearings 102
Water Pump 113
Water Temperature Sensor 118

8 TIGHTENING TORQUES AND USE OF SEALANT 133-135

Table with Tightening Torques for Standard Screws (Coarse Thread) 133
Table with Tightening Torques for Standard Screws (Fine Thread) 133
Table with Tightening Torques of the Main Components and Use of Sealant 134-135

9 SPECIFIC TOOLS 136

10 DIAGNOSIS 138-143

https://truckmanualshub.com/

WARRANTY CERTIFICATE

- The products manufactured by Lombardini Srl are warranted to be free from conformity defects for a period of 24 months from the date of delivery to the first end user.
- For engines fitted to stationary equipment, working at constant load and at constant and/or slightly variable speed within the setting limits, the warranty covers a period up to a limit of 2000 working hours, if the above mentioned period (24 months) is not expired.
- If no hour-meter is fitted , 12 working hours per calendar day will be considered.
- For what concerns the parts subject to wear and deterioration (injection/feeding system, electrical system, cooling system, sealing parts, non-metallic pipes, belts) warranty covers a maximum limit of 2000 working hours, if the above mentioned period (24 months) is not expired.
- For correct maintenance and replacement of these parts, it is necessary to follow the instructions reported in the documentation supplied with each engine.
- To ensure the engine warranty is valid, the engine installation, considering the product technical features, must be carried out by qualified personnel only.
- The list of the Lombardini authorized dealers is reported in the “Service” booklet, supplied with each engine.
- Special applications involving considerable modifications to the cooling/lubricating system (for ex.: dry oil sump), filtering system, turbo-charged models, will require special written warranty agreements.
- Within the above stated periods Lombardini Srl directly or through its authorized network will repair and/or replace free of charge any own part or component that, upon examination by Lombardini or by an authorized Lombardini agent, is found to be defective in conformity, workmanship or materials.
- Any other responsibility/obligation for different expenses, damages and direct/indirect losses deriving from the engine use or from both the total or partial impossibility of use, is excluded.
- The repair or replacement of any component will not extend or renew the warranty period.

Lombardini warranty obligations here above described will be cancelled if:

- Lombardini engines are not correctly installed and as a consequence the correct functional parameters are not respected and altered.
- Lombardini engines are not used according to the instructions reported in the “Use and Maintenance” booklet supplied with each engine.
- Any seal affixed to the engine by Lombardini has been tampered with or removed.
- Spare parts used are not original Lombardini.
- Feeding and injection systems are damaged by unauthorized or poor quality fuel types.
- Electrical system failure is due to components, connected to this system, which are not supplied or installed by Lombardini.
- Engines have been disassembled, repaired or altered by any part other than an authorized Lombardini agent.

- Following expiration of the above stated warranty periods and working hours, Lombardini will have no further responsibility for warranty and will consider its here above mentioned obligations for warranty complete.

- Any warranty request related to a non-conformity of the product must be addressed to the Lombardini Srl service agents.

GENERAL SERVICE MANUAL NOTES

1 - Use only genuine Lombardini repair parts.
Failure to use genuine Lombardini parts could result in sub-standard performance and low longevity.

2 - All data presented are in metric format. That is, dimensions are presented in millimeters (mm), torque is presented in Newton-meters (Nm), weight is presented in kilograms (Kg), volume is presented in liters or cubic centimeters (cc) and pressure is presented in barometric units (bar).

GLOSSARY AND TERMINOLOGY

For clarity, here are the definitions of a number of terms used recurrently in the manual.

- **Cylinder number one:** is the timing belt side piston .
- **Rotation direction:** anticlockwise «viewed from the flywheel side of the engine».

https://truckmanualshub.com/

SAFETY AND WARNING DECALS

- Important remarks and features of the text are highlighted using symbols, which are explained below:

Danger – Attention

This indicates situations of grave danger which, if ignored, may seriously threaten the health and safety of individuals.

Caution – Warning

This indicates that it is necessary to take proper precautions to prevent any risk to the health and safety of individuals and avoid financial damage.

Important

This indicates particularly important technical information that should not be ignored.

SAFETY REGULATIONS

- **LOMBARDINI** Engines are built to supply their performances in a safe and long-lasting way.
  To obtain these results, it is essential for users to comply with the servicing instructions given in the relative manual along with the safety recommendations listed below.
- The engine has been made according to a machine manufacturer's specifications and all actions required to meet the essential safety and health safeguarding requisites have been taken, as prescribed by the current laws in merit.
  All uses of the engine beyond those specifically established cannot therefore be considered as conforming to the use defined by **LOMBARDINI** which thus declines all liability for any accidents deriving from such operations.
- The following indications are dedicated to the user of the machine in order to reduce or eliminate risks concerning engine operation in particular, along with the relative routine maintenance work.
- The user must read these instructions carefully and become familiar with the operations described.
  Failure to do this could lead to serious danger for his personal safety and health and that of any persons who may be in the vicinity of the machine.
- The engine may only be used or assembled on a machine by technicians who are adequately trained about its operation and the deriving dangers.
  This condition is also essential when it comes to routine and, above all, extraordinary maintenance operations which, in the latter case, must only be carried out by persons specifically trained by **LOMBARDINI** and who work in compliance with the existing documentation.
- Variations to the functional parameters of the engine, adjustments to the fuel flow rate and rotation speed, removal of seals, demounting and refitting of parts not described in the operation and maintenance manual by unauthorized personnel shall relieve **LOMBARDINI** from all and every liability for deriving accidents or for failure to comply with the laws in merit.
- On starting, make sure that the engine is as horizontal as possible, unless the machine specifications differ.
  In the case of manual start-ups, make sure that the relative actions can take place without the risk of hitting walls or dangerous objects, also considering the movements made by the operator.
  Pull-starting with a free cord (thus excluding self-winding starting only), is not permitted even in an emergency.
- Make sure that the machine is stable to prevent the risk of overturning.
- Become familiar with how to adjust the rotation speed and stop the engine.
- Never start the engine in a closed place or where there is insufficient ventilation.
  Combustion creates carbon monoxide, an odourless and highly poisonous gas.
  Lengthy stays in places where the engine freely exhausts this gas can lead to unconsciousness and death.
- The engine must not operate in places containing inflammable materials, in explosive atmospheres, where there is dust that can easily catch fire unles specific, adequate and clearly indicated precautions have been taken and have been certified for the machine.
- To prevent fire hazards, always keep the machine at least one meter from buildings or from other machinery.
- Children and animals must be kept at a due distance from operating machines in order to prevent hazards deriving from their operation.
- Fuel is inflammable.
  The tank must only be filled when the engine is off.
  Thoroughly dry any spilt fuel and move the fuel container away along with any rags soaked in fuel or oil.
  Make sure that no soundproofing panels made of porous material are soaked in fuel or oil.
  Make sure that the ground or floor on which the machine is standing has not soaked up any fuel or oil.
- Fully tighten the tank plug each time after refuelling.
  Do not fill the tank right to the top but leave an adequate space for the fuel to expand.
- Fuel vapour is highly toxic.
  Only refuel outdoors or in a well ventilated place.
- Do not smoke or use naked flames when refuelling.
- The engine must be started in compliance with the specific instructions in the operation manual of the engine and/or machine itself.
  Do not use auxiliary starting aids that were not installed on the original machine (e.g. Startpilot').
- Before starting, remove any tools that were used to service the engine and/or machine.

https://truckmanualshub.com/

Make sure that all guards have been refitted.
- During operation, the surface of the engine can become dangerously hot.
  Avoid touching the exhaust system in particular.
- Before proceeding with any operation on the engine, stop it and allow it to cool.
  Never carry out any operation whilst the engine is running.
- The coolant fluid circuit is under pressure.
  Never carry out any inspections until the engine has cooled and even in this case, only open the radiator plug or expansion chamber with the utmost caution, wearing protective garments and goggles. If there is an electric fan, do not approach the engine whilst it is still hot as the fan could also start operating when the engine is at a standstill.
  Only clean the coolant system when the engine is at a standstill.
- When cleaning the oil-cooled air filter, make sure that the old oil is disposed of in the correct way in order to safeguard the environment.
  The spongy filtering material in oil-cooled air filters must not be soaked in oil.
  The reservoir of the separator pre-filter must not be filled with oil.
- The oil must be drained whilst the engine is hot (oil T ~ 80°C).
  Particular care is required to prevent burns.
  Do not allow the oil to come into contact with the skin.
- Pay attention to the temperature of the oil filter when the filter itself is replaced.
- Only check, top up and change the coolant fluid when the engine is off and cold.
  Take care to prevent fluids containing nitrites from being mixed with others that do not contain these substances since "Nitrosamine", dangerous for the health, can form.
  The coolant fluid is polluting and must therefore be disposed of in the correct way to safeguard the environment.
- During operations that involve access to moving parts of the engine and/or removal of rotating guards, disconnect and insulate the positive wire of the battery to prevent accidental short-circuits and to stop the starter motor from being energized.
- Only check belt tension when the engine is off.
- Only use the eyebolts installed by **LOMBARDINI** to move the engine.
  These lifting points are not suitable for the entire machine; in this case, the eyebolts installed by the manufacturer should be used.

GENERAL SAFETY DURING OPERATING PHASES

– The procedures contained in this manual have been tested and selected by the manufacturer's technical experts, and hence are to be recognised as authorised operating methods.
– A number of procedures must be carried out with the aid of equipment and tools that simplify and improve the timing of operations.
– All tools must be in good working condition so that engine components are not damaged and that operations are carried out properly and safely.
  It is important to wear the personal safety devices prescribed by work safety laws and also by the standards of this manual.
– Holes must be lined up methodically and with the aid of suitable equipment. Do not use your fingers to carry out this operation to avoid the risk of amputation.
– Some phases may require the assistance of more than one operator. If so, it is important to inform and train them regarding the type of activity they will be performing in order to prevent risks to the health and safety of all persons involved.
– Do not use flammable liquids (petrol, diesel, etc.) to degrease or wash components. Use special products.
– Use the oils and greases recommended by the manufacturer.
  Do not mix different brands or combine oils with different characteristics.
– Discontinue use of the engine if any irregularities arise, particularly in the case of unusual vibrations.
– Do not tamper with any devices to alter the level of performance guaranteed by the manufacturer.

SAFETY AND ENVIRONMENTAL IMPACT

Every organisation has a duty to implement procedures to identify, assess and monitor the influence of its own activities (products, services, etc.) on the environment.
Procedures for identifying the extent of the impact on the environment must consider the following factors:

- Liquid waste
- Waste management
- Soil contamination
- Atmospheric emissions
- Use of raw materials and natural resources
- Regulations and directives regarding environmental impact

In order to minimise the impact on the environment, the manufacturer now provides a number of indications to be followed by all persons handling the engine, for any reason, during its expected lifetime.

- All packaging components must be disposed of in accordance with the laws of the country in which disposal is taking place.
- Keep the fuel and engine control systems and the exhaust pipes in efficient working order to limit environmental and noise pollution.
- When discontinuing use of the engine, select all components according to their chemical characteristics and dispose of them separately.

https://truckmanualshub.com/

ENGINE ON ROTATING STAND - SAFETY PRECAUTIONS

Important

- **Before removing the engine from the vehicle on which it is installed, disconnect the power supply, detach the fuel and coolant supply, and all connections including the mechanical ones.**

- **Attach the engine to a suitable lifting device (lifting beam).**

- **Hook the lifting device in the engine lifting points, as shown in the figure.**

- **Before lifting, make sure the weight is correctly balanced by checking its barycentre.**

- **Close all engine openings accurately (exhaust, intake, etc.), then wash the outside and dry with a jet of compressed air.**

- **Place the engine on a rotating stand to easily work on it.**

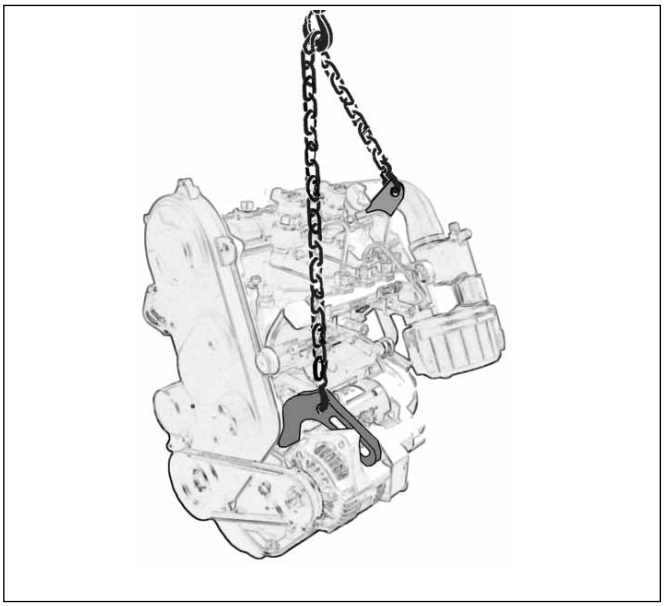

Important

The bracket of the lifting points have been designed to lift the engine only. They are not intended nor approved to lift additional weights.
Do not use different methods to lift the engine than those described herein. In case different methods are used, no warranty shall be granted for any consequential damage.

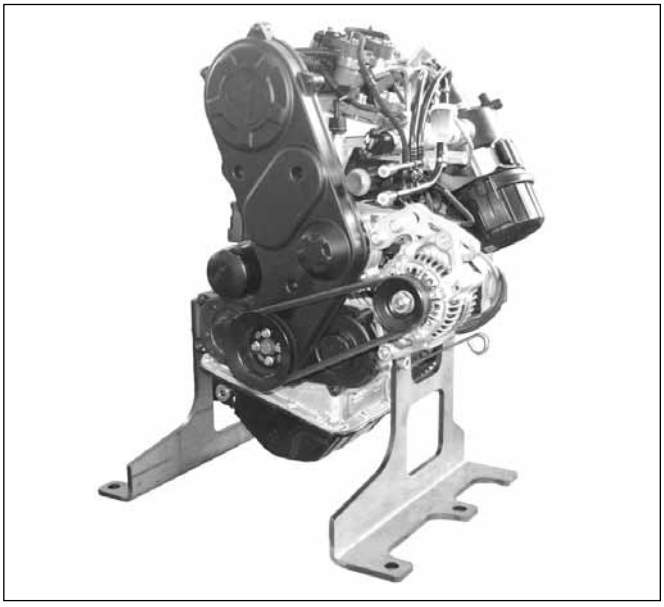

Note: ***According to the intervention to be carried out, the engine may also be positioned on a workbench and secured using special support brackets (not supplied).***

https://truckmanualshub.com/

GENERAL DESCRIPTION OF THE ENGINE

Main Components

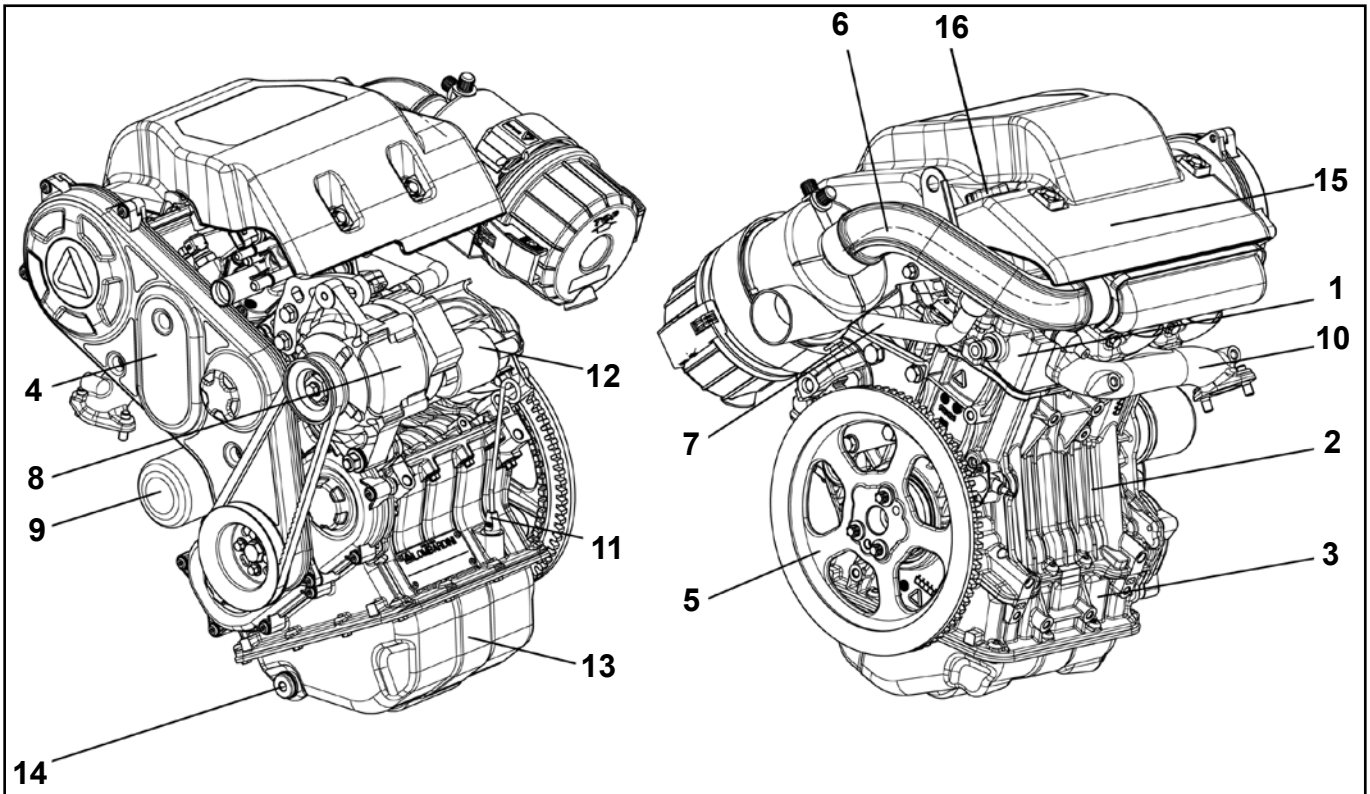

1) Cylinder Head
2) Engine Block
3) Crankcase
4) Timing System
5) Flywheel
6) Intake Assembly
7) Vent Circuit
8) Alternator
9) Oil Filter
10) Exhaust Manifold
11) Oil Dipstick
12) Starter Motor
13) Oil Sump
14) Oil drain plug
15) Acoustic Insulation Panel
16) Oil Refill Plug

Description

- 4-stroke, 2 in-line cylinders Diesel engine.
- Aluminium alloy cylinder block and head.
- Timing system with two valves per cylinder, controlled by overhead camshaft driven by synchronous belt, roller rocker arms and hydraulic tappets.
- Electronically controlled direct injection (Common Rail).
- Forced lubrication by means of trochoid oil pump driven by left balance shaft.
- Double balance countershaft (total balancing of first order alternating forces).
- Forced circulation liquid-cooling system.

https://truckmanualshub.com/

PROBLEMS AND RELATED CAUSES

THE ENGINE MUST BE STOPPED IMMEDIATELY WHEN:

1) - The engine rpms suddenly increase and decrease;
2) - A sudden and unusual noise is heard;
3) - The colour of the exhaust gas suddenly darkens;
4) - The oil pressure indicator light turns on while running;
5) - The coolant temperature indicator light turns on while running;

TABLE OF ANOMALIES ACCORDING TO THEIR SYMPTOMS

The following table suggests the probable causes of some anomalies that may appear during engine operation.
Always proceed systematically. Start from the basic checks before disassembling the engine or replacing its components.

POSSIBLE CAUSE		TROUBLE														
		Engine does not start	Engine starts but stops	No acceleration	Non-uniform speed	Black smoke	White smoke	Oil preassure too low	Oil level increase	Excessive oil consumption	Oil and fuel dripping from the exhaust	Engine overheats	Inadequate performance	High noise level	The Warning Lamp is ignited	
FUEL CIRCUIT	Clogged fuel hoses	■	■	■	■		■						■			
	Clogged fuel filter	■	■	■	■		■						■			
	Air or water in the fuel supply circuit	■	■	■	■		■						■	■		
	Clogged tank cap breather	■	■	■	■								■			
	Faulty fuel pump	■													■	
	Lack of fuel	■	■													
ELECTRIC SYSTEM	Glow plug fuse burnt-out	■														
	Flat battery	■														
	Inefficient or wrong cable connection	■														
	Faulty starter switch	■														
	Faulty starter motor	■														
	Faulty glow plugs	■					■									
MAINTENANCE	Clogged air filter	■	■	■	■	■				■			■			
	Excessive idle operation						■			■	■					
	Incomplete running-in						■			■			■			
SETTINGS REPAIRS	Worn out or stuck rings	■					■			■	■	■	■			
	Worn out cylinders	■					■			■	■	■	■			
	Worn out valve guides						■			■	■	■				
	Bad valve seal	■				■					■	■	■			
	Crankshaft/Connecting rod bearings worn out							■					■	■		
	Cylinder head gasket damaged	■			■		■		■	■		■	■			
	Faulty valve timing	■			■		■					■	■	■		

https://truckmanualshub.com/

POSSIBLE CAUSE		TROUBLE														
		Engine does not start	Engine starts but stops	No acceleration	Non-uniform speed	Black smoke	White smoke	Oil preassure too low	Oil level increase	Excessive oil consumption	Oil and fuel dripping from the exhaust	Engine overheats	Inadequate performance	High noise level	The Warning Lamp is ignited	
LUBRICATION CIRCUIT	Excessive oil level						■			■	■	■	■	■		
	Low oil level							■				■	■			
	Dirty or blocked pressure regulating valve							■								
	Worn oil pump							■								
	Air in the oil suction pipe							■								
	Oil sump suction pipe clogged							■								
	Oil sump drainage pipe clogged													■		
INJECTION	Damaged injector	■		■		■	■		■		■	■	■	■		
	Damaged high-pressure pump	■		■									■			
	Wrong injector IMA codes				■	■	■						■	■		
COOLING CIRCUIT	Insufficient coolant											■				
	Defective fan, radiator, or radiator cap											■				
	Defective thermostatic valve											■				
	Coolant leaks from the radiator, ducts, crankcase or water pump.											■				
	Inside of radiator or coolant lines clogged											■				
	Defective or worn water pump											■				
	Heat exchange surface of the radiator clogged											■				

https://truckmanualshub.com/

OVERALL DIMENSIONS

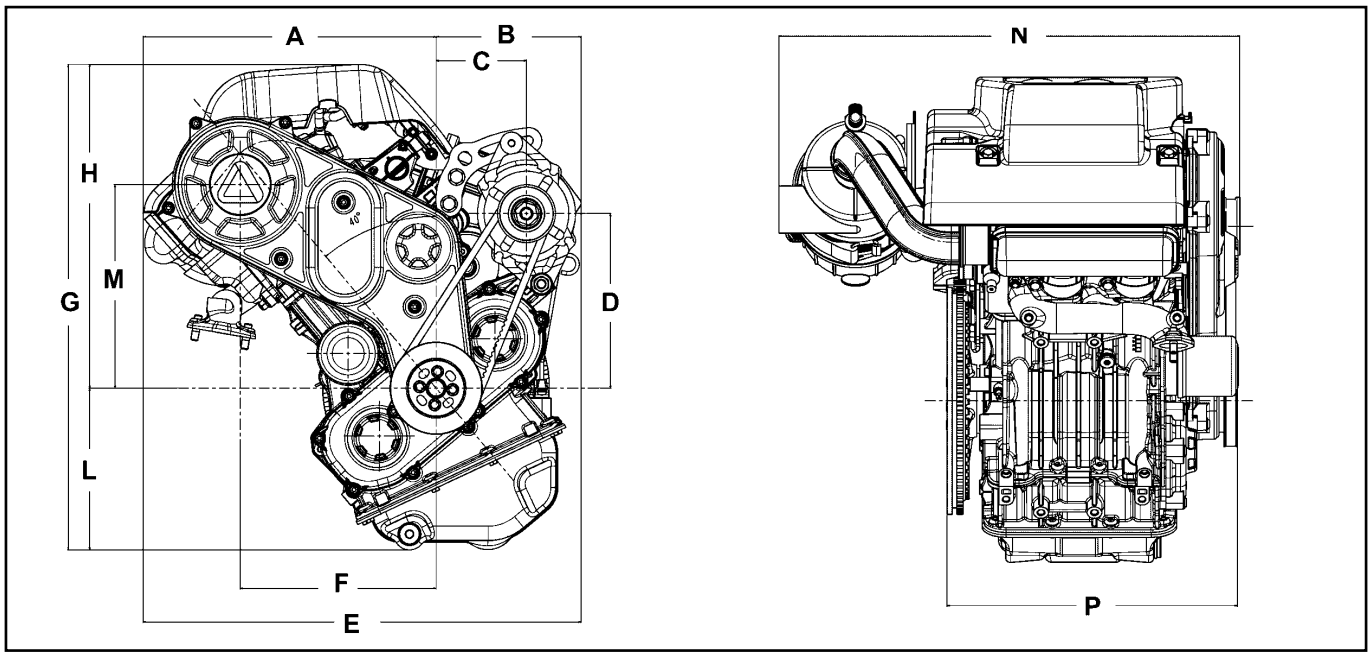

DIMENSIONS (mm)							
A	318	D	189,1	G	525,7	M	220,5
B	157,2	E	475,1	H	350,6	N	500
C	98	F	212,5	L	175,1	P	314,8

GENERAL INFORMATION		
Operating cycle	Four strokes Diesel	
Cylinders	n.	2 in-line
Bore x stroke	mm	68x60,6
Displacement	cm^3	440
Compression rate	20:1	
Suction	Dry-type air filter	
Cooling	Liquid	
Crankshaft rotation	Anticlockwise (seen from flywheel side)	
Combustion sequence	Crankshaft degrees	360°
Timing System	Single shaft driven by synchronous toothed belt	
Valves	n.	2 for cylinder
Shaft	overhead camshaft	
Tappets	hydraulic	
Injection	electronically-controlled direct injection (Common Rail)	
Engine dry weight	Kg	48.5
Maximum tilt during operation	less than 1 minute	25°
Maximum tilt during operation	less than 30 minutes	15°
Volume of sucked air (4,400 rpm)	l/min	820
Minimum volume of radiator cooling air (at static pressure of 0 mm H2O)	m^3/h	880
POWER AND TORQUE		
Peak rpm	giri/min.	4'400
Peak power (NB 80/1269/EEC - ISO 1585 - DIN 7020)	kW	8,5
Maximum torque (N power at 2,000 rpm)	Nm	21
Admissible axial load on crankshaft	Kg	80

https://truckmanualshub.com/

CONSUMPTIONS AT MAXIMUM POWER		
Specific fuel consumption	g/kWh	320
Oil consumption	g/h	0,0035
FUEL SUPPLY CIRCUIT		
Fuel type	Automotive Diesel fuel	
Fuel supply	Electric pump	
Fuel filter	cartridge	
Filtering surface	cm^2	2'400
Filtering capacity	µm	2 ÷ 3
Maximum circuit pressure	bar	0.5
LUBRICATION CIRCUIT		
Lubrication type	Totally forced	
Circuit supply	Trochoid pump	
Oil maximum quantity	filter included (l)	2,1
Oil maximum quantity	filter excluded (l)	2
Oil pressure switch		
Switching pressure (minimum value)	bar	0,3
Oil filter	External, full flow	
Maximum operating pressure	bar	6
Maximum bursting pressure	bar	20
Filtering capacity	µm	15
By-pass valve calibration	bar	1,3 ÷ 1,9
Filtering surface	cm^2	580
COOLING CIRCUIT		
Coolant	50% decalcified water - 50% anti-freeze liquid	
Water pump	on engine block, driven by timing belt	
Thermostatic valve		
Opening temperature	°C	78°÷82°
Stroke at 94°C	mm	7
Liquid recirculation (from Δp 0,5 bar)	l/h	30÷80
ELECTRICAL INSTALLATION - ELECTRIC FAN		
Rated voltage	V	12
Alternator (rated voltage)	V	14
External alternator (rated current)	A	45
Starter motor power	kW	1,1
System electrical consumption, excepted: glow plugs, electric pump, electric fan, starter motor	W	0,35
Coolant temperature indicator light sensor		
Electrical circuit	Unipolar system	
Supply voltage	V	6÷24
Absorbed power	W	3
Indicator light operating temperature	°C	106°÷108°

Battery not supplied by Lombardini

Recommended battery: 12 V 44 Ah / 400 A DIN
12 V 44 AH / 790 A EN

https://truckmanualshub.com/

ENGINE AND MANUFACTURER IDENTIFICATION

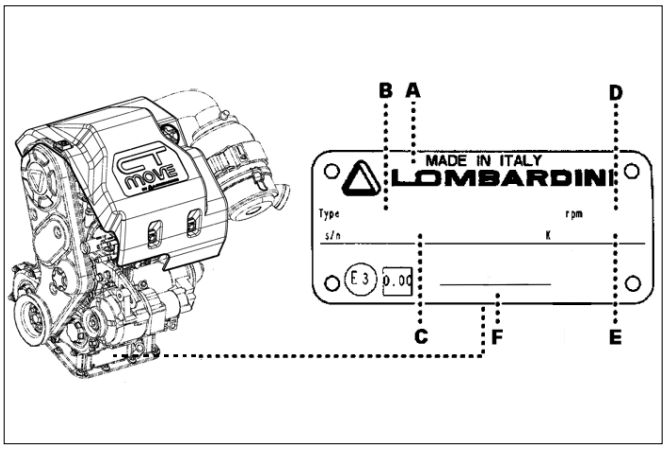

The identification plate shown is applied directly on the engine. It shows the following information:

A) Manufacturer identification
B) Engine type
C) Engine serial number
D) Peak rpm
E) Customer version number (K no.)
F) Approval data

PERFORMANCE GRAPH

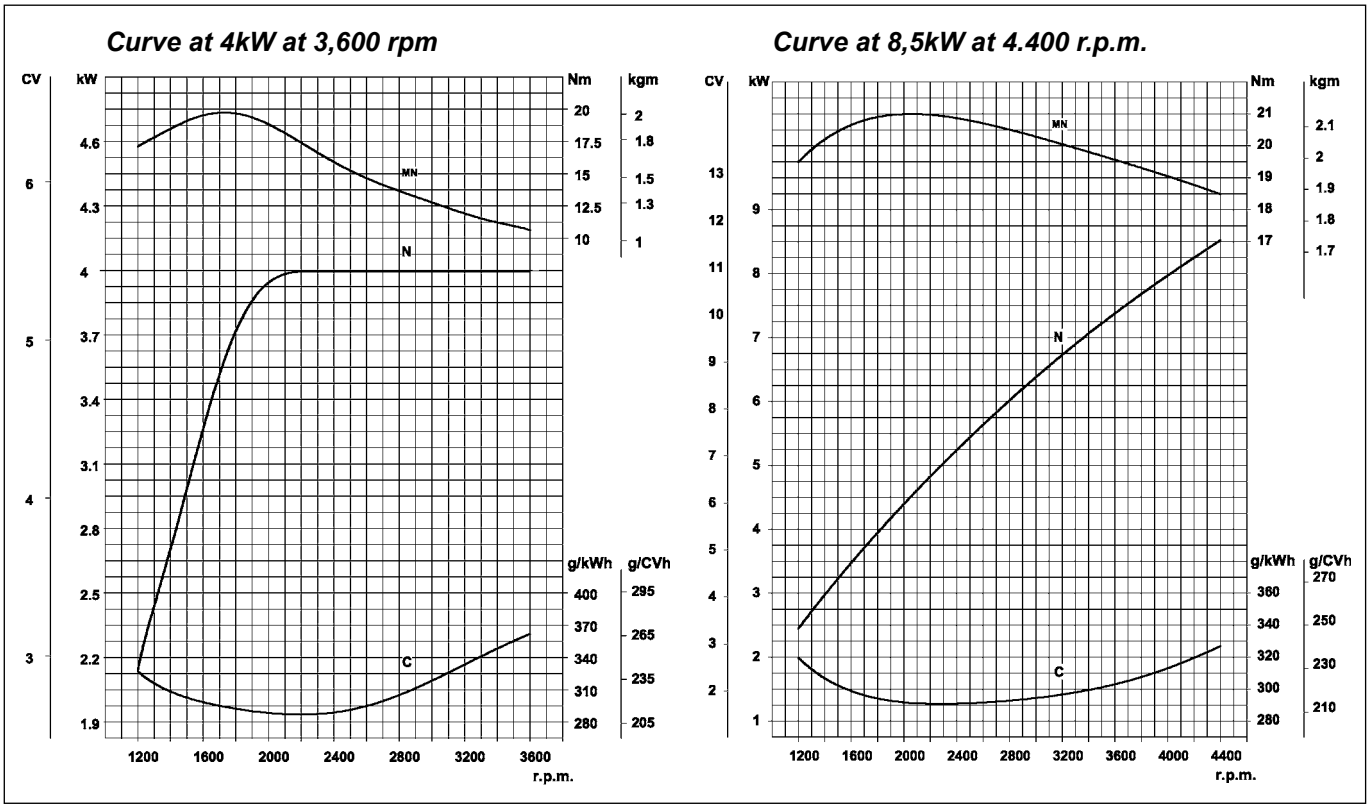

Legend

N* (80/1269/EEC-ISO 1585) = Power curve.
Automotive power: discontinuous services at variable RPM and load.
MN* = Torque curve
C* = specific consumption curve

* The above curves are approximate since they depend on applications and on engine mapping.

- The above power levels refer to the engine equipped with air filter, muffler, fully broken-in suction fan, and ambient conditions of 20°C and 1 bar.
- The maximum power is guaranteed with a tolerance of 5%.
- These power rates are reduced by approx. 1% every 100m of altitude and by 2% for every 5°C exceeding 25°C.

Note: Please contact Lombardini for power, torque, and specific consumption curves at different speeds from the above.

Caution – Warning

Non-approval by Lombardini for any modifications releases the company from any damages incurred by the engine.

https://truckmanualshub.com/

LDW 442 CRS ENGINE MAINTENANCE

Important

Non compliance with the operations described in the table involves the risk of technical damages to the engine and vehicle. Any non compliance makes the warranty become null and void.

LDW 442 CRS ENGINE UNSCHEDULED MAINTENANCE

CHANGE	
ONLY AFTER FIRST 1,000 KM	- Engine oil - Oil filter

CHECK	
AFTER FIRST 1,000 KM	- Fuel hoses and connections - Coolant - Alternator belt tension

LDW 442 CRS ENGINE SCHEDULED MAINTENANCE

		PERIODICITY IN KM (PER 1,000 KM)																			
			10		20		30		40		50		60		70		80		90		100
OPERATION DESCRIPTION																					
CLEANING AND CHECKING	Radiator fins				■				■				■				■				■
	Engine oil level	EVERY 2,500 km																			
	Oil vapour recirculation system								■				■				■				
	Fuel hoses and fittings				■				■				■				■				■
	Coolant level	EVERY 2,500 km																			
	Alternator belt tension		■		■		■		■		■		■		■		■		■		■
	Air filter element		■		■		■		■		■		■		■		■		■		■
CHANGE	Engine oil		■		■		■		■		■		■		■		■		■		■
	Oil filter		■		■		■		■		■		■		■		■		■		■
	Fuel filter		■		■		■		■		■		■		■		■		■		■
	Air filter cartridge (**)		■		■		■		■		■		■		■		■		■		■
	Coolant										■										■
	Alternator belt				■				■				■				■				■
	Timing belt (*)										■										■
	Tightening pulley										■										■
	Fuel hoses and safety filter										■										■

Important

Even if the prescribed km have not been covered, the following items must be changed or replaced:

- **engine oil, after one year**
- **coolant, after two years**
- **alternator belt, after four years**
- **timing belt, after four years**

After 100,000 km, continue with the same maintenance intervals.

(*) Once removed, the timing belt must be replaced, even if it has not reached its prescribed service life.

(**) The period of time that must elapse before cleaning or replacing the filter element depends on the environment in which the engine operates. The air filter must be cleaned and replaced more frequently under very dusty conditions.

https://truckmanualshub.com/

COOLANT

An anti-freeze protection liquid (eg. AGIP ANTIFREEZE SPEZIAL) – mixed with 50% decalcified water – must be used.
As well as lowering the freezing point, the permanent liquid also raises the boiling point and protects the whole circuit from corrosion.

FUEL RECOMMENDATIONS

Purchase diesel fuel in small quantities and store in clean, approved containers. Clean fuel prevents the diesel fuel injectors and pumps from clogging. Do not overfill the fuel tank.
Leave room for the fuel to expand. Immediately clean up any spillage during refueling.

Never store diesel fuel in galvanized containers; diesel fuel and the galvanized coating react chemically to each other, producing flaking that quickly clogs filters or causes fuel pump or injector failure.

High sulfur content in fuel may cause engine wear. In those countries where diesel has a high sufur content, its is advisable to lubricate the engine with a high alkaline oil or alternatively to replace the lubricating oil recommended by the manufacturer more frequently. The regions in which diesel normally has a low sulfur content are Europe, North America, and Australia.

PRESCRIBED LUBRICANT	
Fuel with low sulphur content	**API CF4 - CG4**
Fuel with high sulphur content	**API CF**

FUEL TYPE

For best results, use only clean, fresh, commercial-grade diesel fuel. Diesel fuels that satisfy the following specifications are suitable for use in this engine: ASTM D-975 - 1D or 2D, EN590, or equivalent.

FUELS FOR LOW TEMPERATURES

It is possible to run the engine at temperatures below 0°C using special winter fuels. These fuels reduce the formation of paraffin in diesel at low temperatures. If paraffin forms in the diesel, the fuel filter becomes blocked interrupting the flow of fuel.

Fuel can be:	- Summer	up to	0°C
	- Winter	up to	-10°C
	- Alpine	up to	-20°C
	- Arctic	up to	-30°C

BIODIESEL FUEL

Fuels containing less than 20% methyl ester or B20, are suitable for use in this engine. Biodiesel fuels meeting the specification of BQ-9000, EN 14214 or equivalent are recommended. DO NOT use vegetable oil as a biofuel for this engine. Any failures resulting from the use of fuels other than recommended will not be warranted.

AVIATION FUEL

Aviation fuels suitable for use in this engine include JP5, JP4, JP8 and, JET-A (if 5 percent oil is added).

EMISSION CONTROL INFORMATION

LOW SULFUR FUEL OR ULTRA LOW SULFUR FUEL ONLY

EPA /CARB emission label must be attached near the fuel inlet.

https://truckmanualshub.com/

LUBRICANTS

Recommended oil

Description	*Oil type*	*Oil characteristics*
Engine oil	**Agip SINT COMMON RAIL 5W40**	**API CF-4** **ACEA B3 - B4**

Engine oil capacity

Oil volume at max. level (including oil filter)	Litres	**2,1**
Oil volume at max. level (without filter)	Litres	**2,0**

SAE classification

In the SAE classification oils are identified according to viscosity without considering any other qualitative characteristic.
The first number refers to the viscosity when cold, for use during winter (W= winter), while the second number is for viscosity at high temperatures.
The criteria for choosing an oil must include the minimum ambient temperature to which the engine is to be exposed during the winter and the maximum temperature during operation in the summer.
Monograde oils are generally used when the operating temperature varies little.
Multigrade oils are less sensitive to temperature variations.

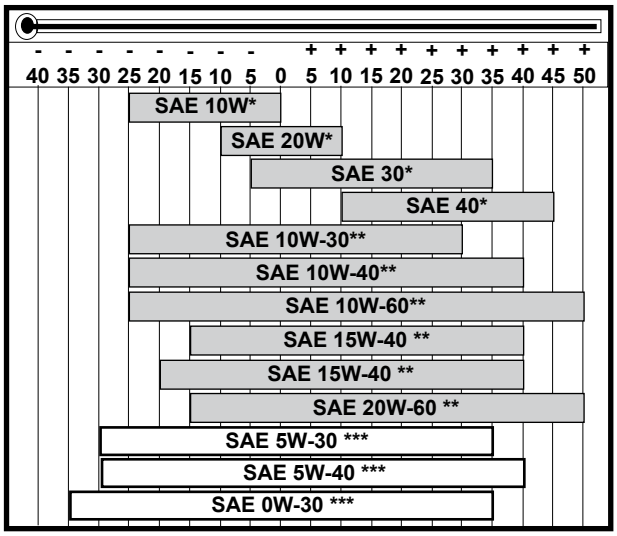

** Mineral base*
*** Semi-synthetic base*
**** Synthetic base*

API/MIL Sequences

	DIESEL								BENZINA - ESSENCE - PETROL BENZIN - GASOLINA							
API	CH-4	CG-4	CF-4	CF-2	CF	CE	CD	CC	SC	SD	SE	SF	SG	SH	SJ	SL
MIL					L- 46152 D / E											

CORRENTI - CURRENT | OBSOLETI - OBSOLETE

Key to abbreviations

A.P.I. : *(American Petroleum Institute)*
MIL : *USA military specifications for engine oils issued for logistics reasons*
ACEA : *European Automobile Manufacturers Association*

ACEA Standards – ACEA sequences

PETROL
A1 = Low-viscosity, for friction reduction
A2 = Standard
A3 = High performance

LIGHT DIESELS

B1 = Low-viscosity, for friction reduction
B2 = Standard
B3 = High performance (indirect injection)
B4 = High quality (direct injection)

HEAVY DIESELS

E1 = Obsolete
E2 = Standard
E3 = Heavy conditions (Euro 1 - Euro 2 engines)
E4 = Heavy conditions (Euro 1 - Euro 2 - Euro 3 engines)
E5 = High performance in heavy conditions (Euro 1 - Euro 2 - Euro 3 engines)

https://truckmanualshub.com/

FUEL SUPPLY CIRCUIT

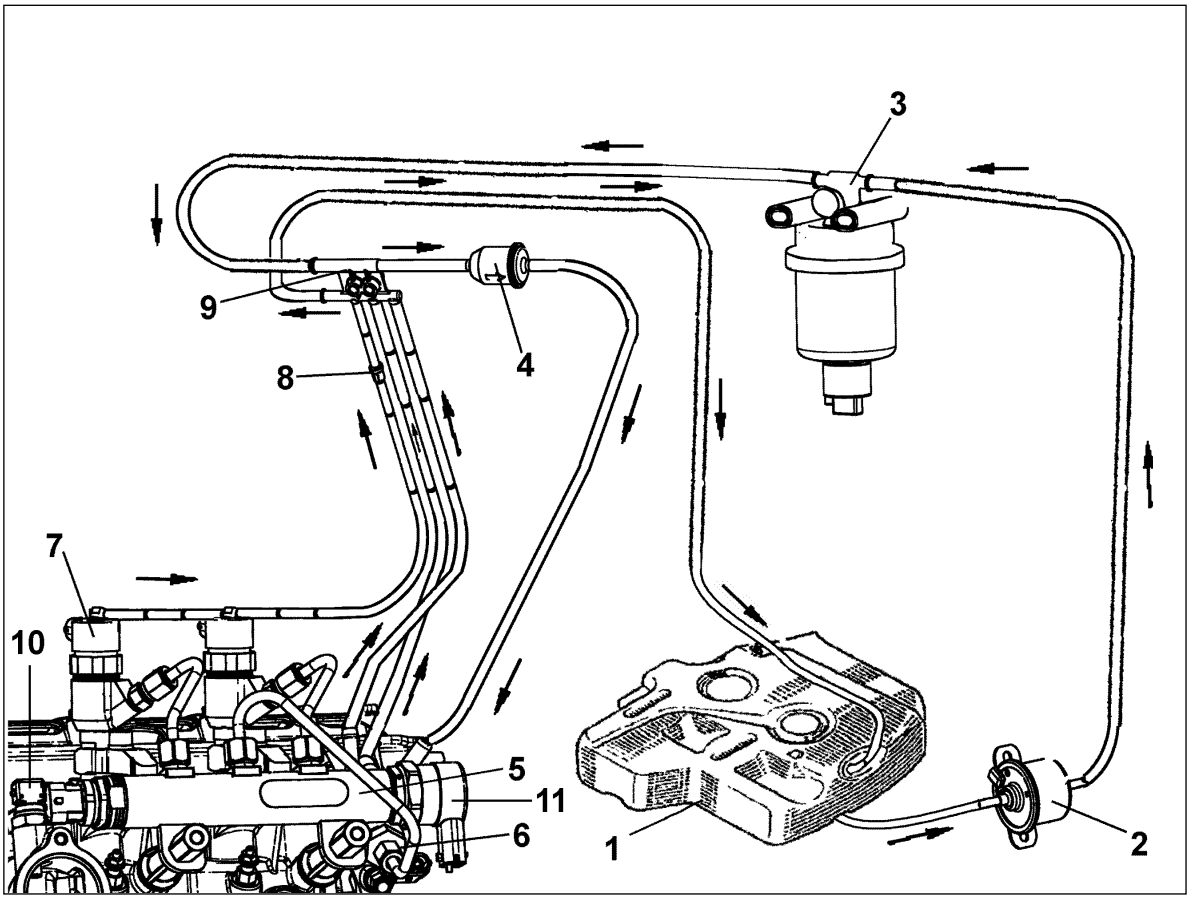

Rif.	Description
1	Tank (not supplied)
2	Electric fuel pump
3	Fuel filter
4	Safety in-line filter
5	Common Rail
6	High-pressure pump
7	Electronic injectors
8	Return pressure regulating valve
9	Distributor
10	Pressure sensor
11	Pressure regulator

https://truckmanualshub.com/

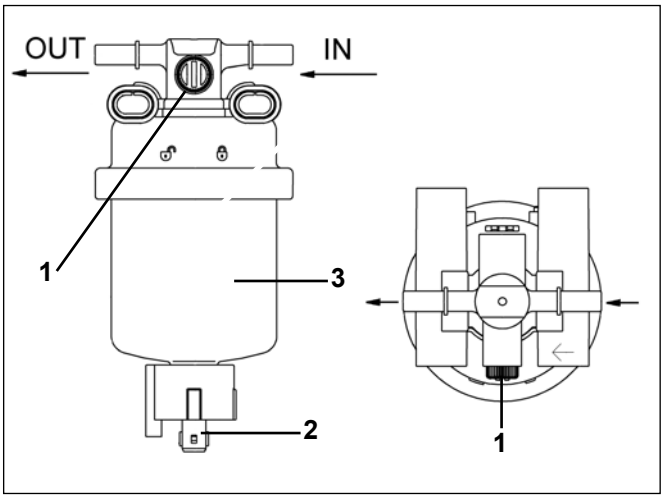

FUEL FILTER

A fuel filter is supplied with the engine, to be mounted on the vehicle frame.

Components

1. Air bleeding plug
2. Water in fuel sensor
3. Cartridge

Description	*Value*
Filtering surface	2.400 cm^2
Filtering capacity	2 µm
Max operating pressure	2.0 Bar
Max delivery	190 litres/hour

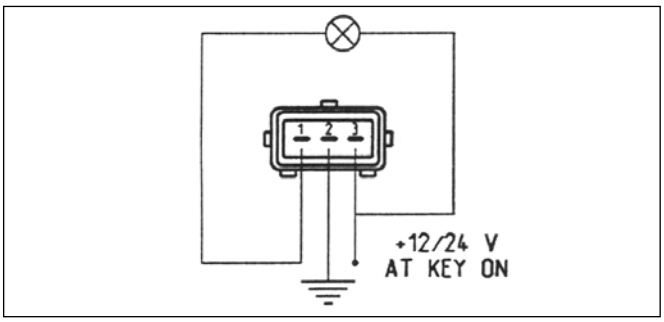

WATER IN FUEL SENSOR - WIRING DIAGRAM

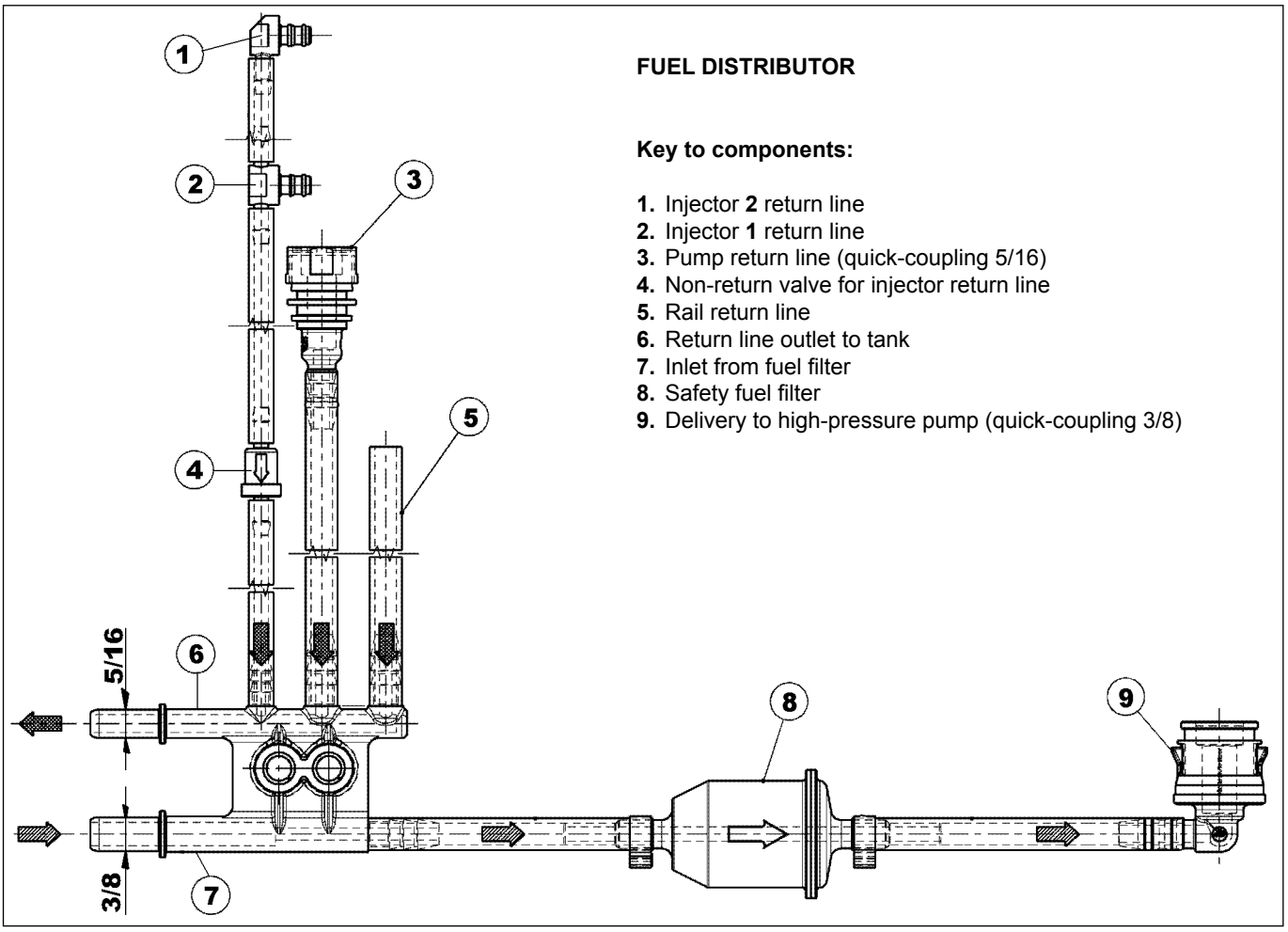

FUEL DISTRIBUTOR

Key to components:

1. Injector **2** return line
2. Injector **1** return line
3. Pump return line (quick-coupling 5/16)
4. Non-return valve for injector return line
5. Rail return line
6. Return line outlet to tank
7. Inlet from fuel filter
8. Safety fuel filter
9. Delivery to high-pressure pump (quick-coupling 3/8)

https://truckmanualshub.com/

ELECTRIC PUMP

Features:

Voltage:..... 12 V;
Max absorbed current:..... 1.5 A;
Min pump delivery: ..... 24 l/h
Self-adjusting pressure:..... 0.50 bar
Operating pressure:..... 0.20 bar
Working temperature ..... -30/+70°C.

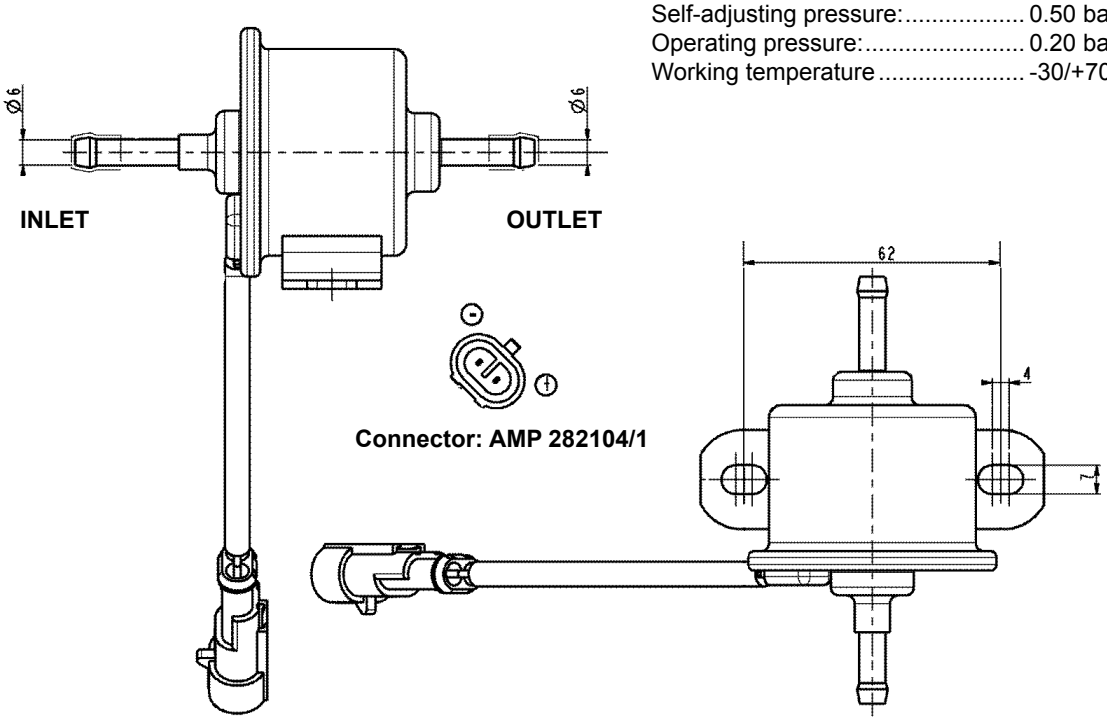

INJECTION PUMP

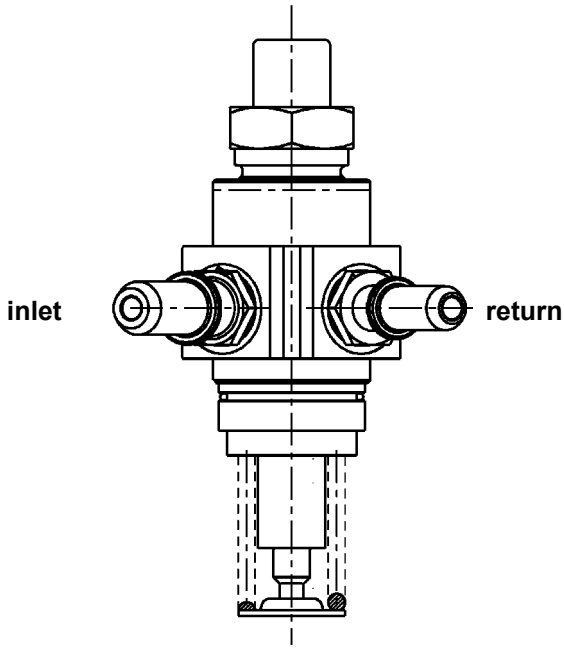

Description	*Value*
Pumping element	Ø 5.5 mm
Total stroke	5.7 mm
Working stroke	3.5 mm
Pre-stroke	2.2 mm

https://truckmanualshub.com/

LUBRICATION CIRCUIT

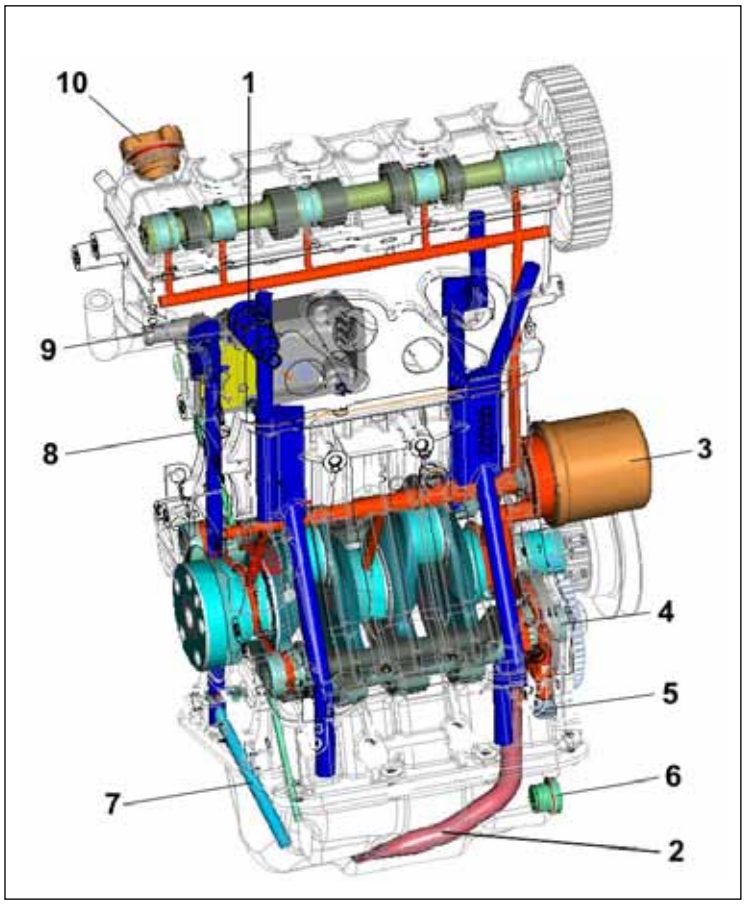

Rif.	Description
1	Pressure switch
2	Oil sump suction
3	Oil filter cartridge
4	Oil pump
5	Oil pressure regulating valve
6	Oil drain plug
7	Oil return line
8	Oil dipstick
9	Vent system
10	Oil filler cap

In the sections in red the oil is under pressure, in the sections in blue the oil is in the return phase, i.e. not under pressure.
The oil pump is driven by the left balance shaft, seen from timing system side.

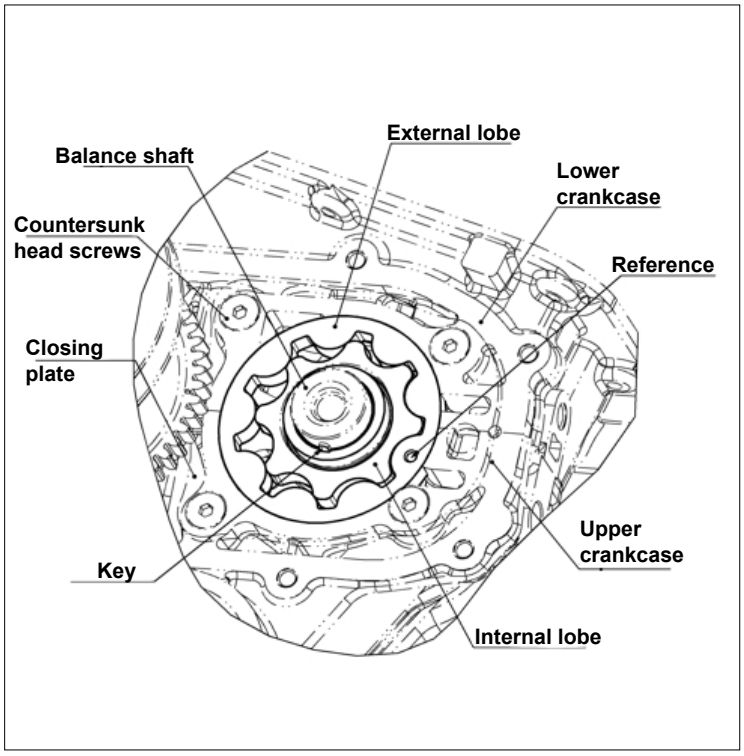

OIL PUMP

The oil pump is a trochoid-type lobe pump, and it is driven by the left balance shaft. The pump casing is partly integrated in the upper crankcase and partly in the lower one. The internal lobe is keyed onto the left balance shaft.
It is compulsory to assemble the external lobe with its reference turned outside, so that it is visible to the operator, as shown in the figure.

Features:

Pump type: lobe pump

Pump drive:
gear driven by
crankshaft and installed on left balance shaft

Pressure regulating valve: installed on crankcase

https://truckmanualshub.com/

COOLING SYSTEM OPERATING PRINCIPLE

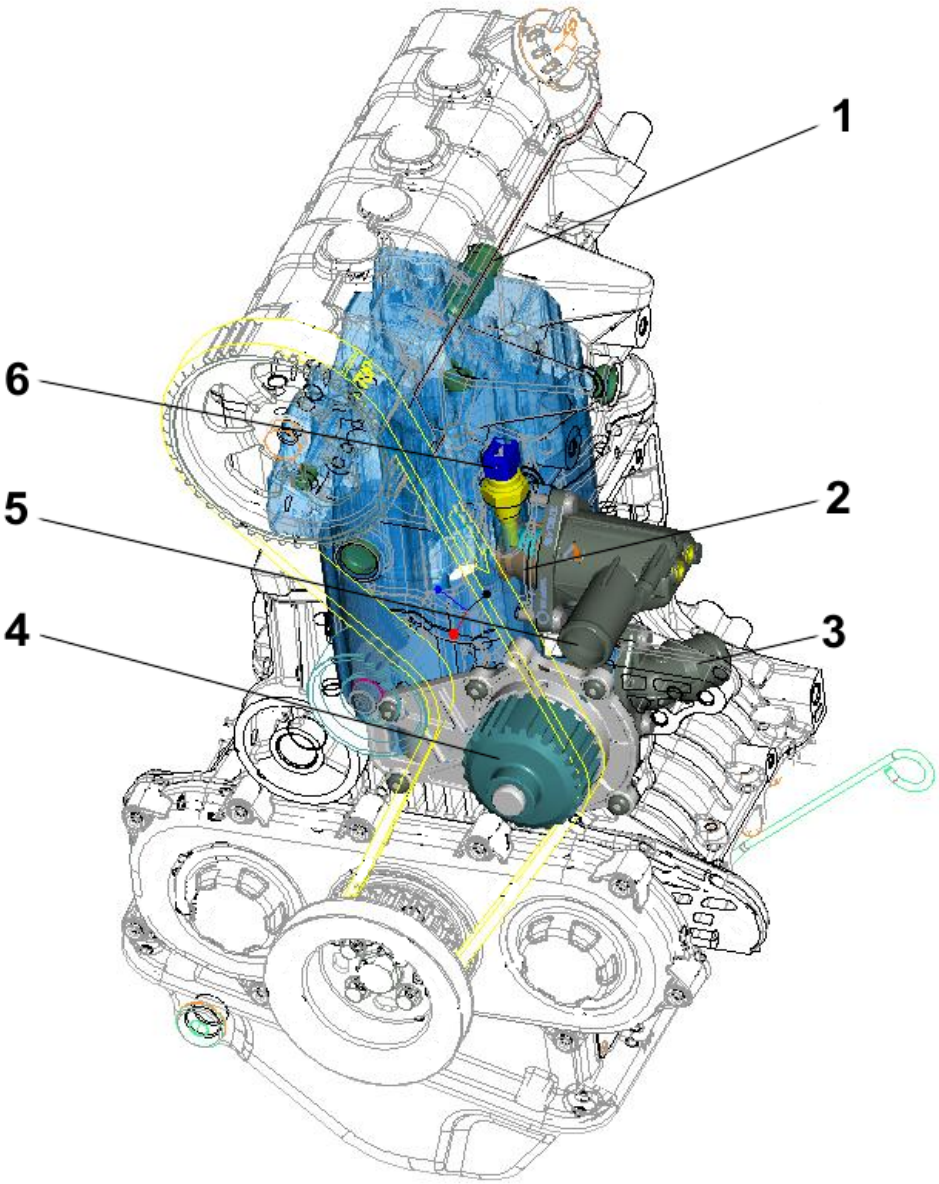

Rif.	*Description*
1	Cab heating
2	Thermostatic valve
3	Liquid circulating pump suction
4	Liquid circulating pump
5	Liquid outlet from engine
6	Water temperature sensor

https://truckmanualshub.com/

WATER PUMP

Features:

. Delivery ..... 75 l/min
. Rpm 4,400
. Gear ratio (Rpmpump/Rpmengine) 0.96
. Number of pump revolutions 4,224
. Max working time..... 130°C

Water delivery graph (l/min)

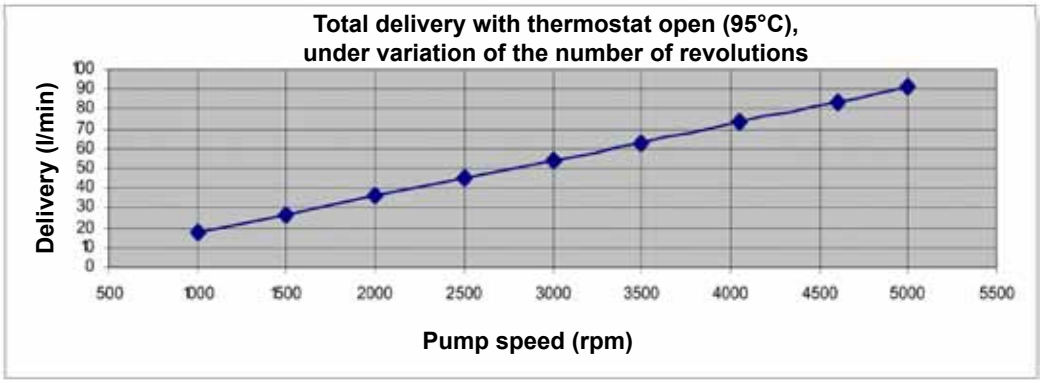

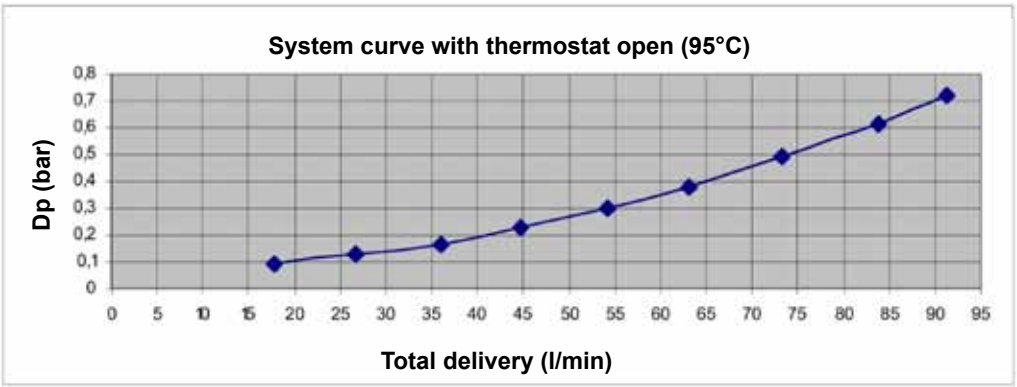

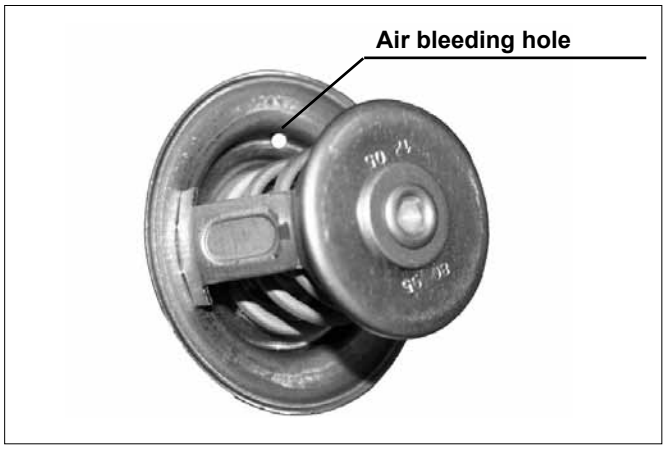

THERMOSTATIC VALVE

Features:

Temperature for opening start: ..... 80°C
Temperature for opening end: ..... 95°C
Lift:..... 7 mm
Water recirculation:.....30÷80 l/h

https://truckmanualshub.com/

INTAKE SYSTEM

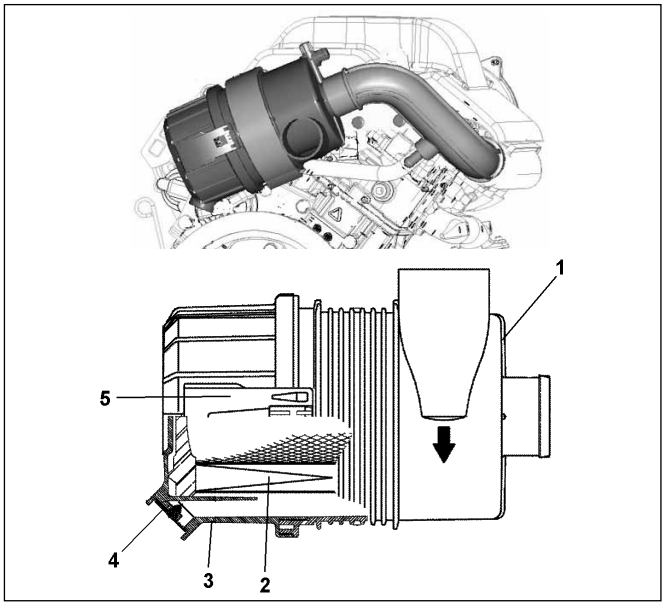

AIR FILTER

The air filter is a dry-type one, with a replaceable paper filter cartridge.
The filter intake must be positioned in a cool area.
The temperature of the air sucked must never exceed ambient temperature by more than 10°C (if you are using a pipe, check that pipe length is 400 mm max and that it is the straightest possible).

Components:

1. Filter body
2. Filtering cartridge
3. Cover
4. Dust exhaust valve
5. Articulated fastener

https://truckmanualshub.com/

https://truckmanualshub.com/

ENGINE ELECTRONIC CONTROL SYSTEM

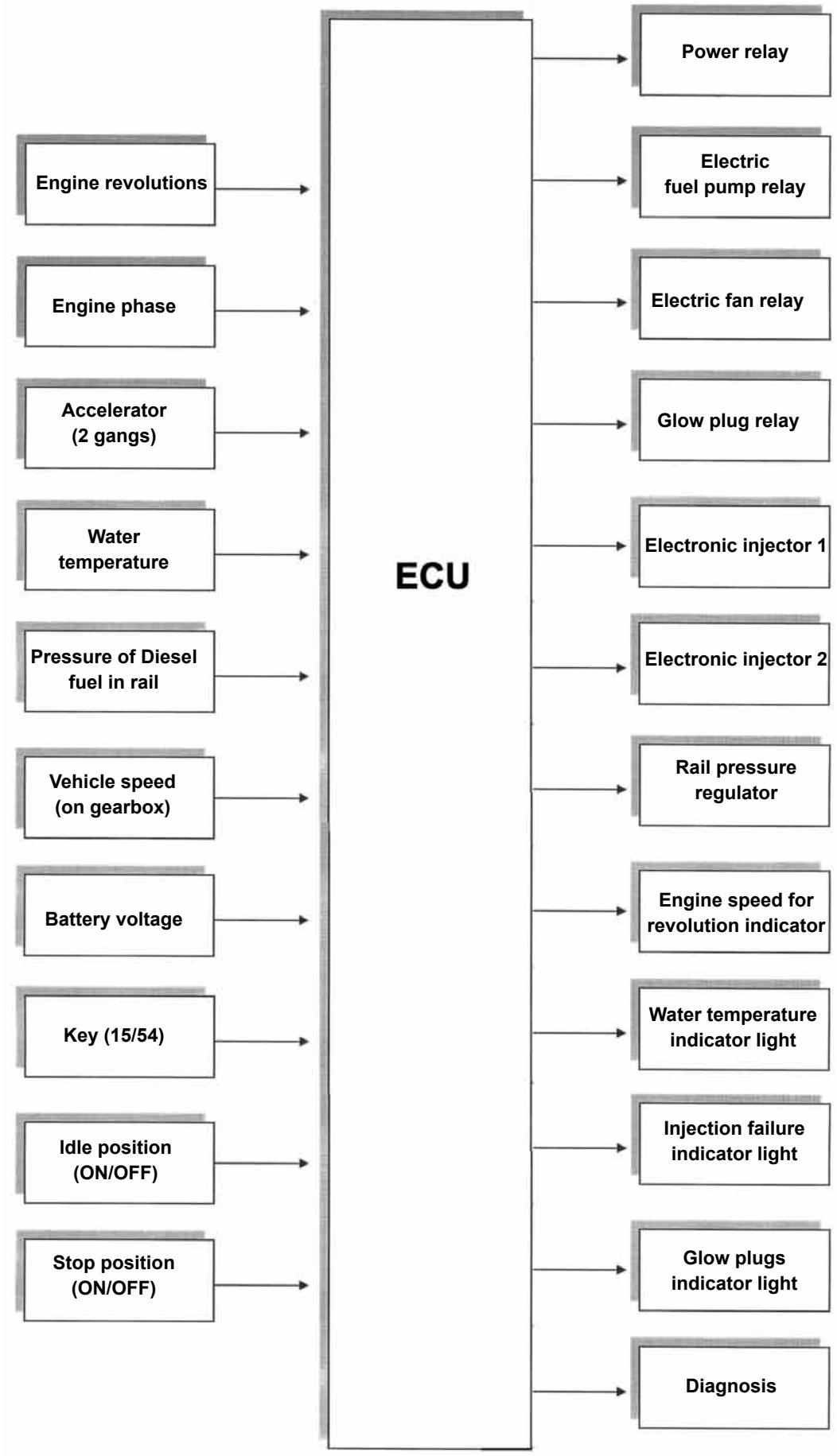

https://truckmanualshub.com/

WIRING DIAGRAM OF THE ELECTRICAL/ELECTRONIC SYSTEM

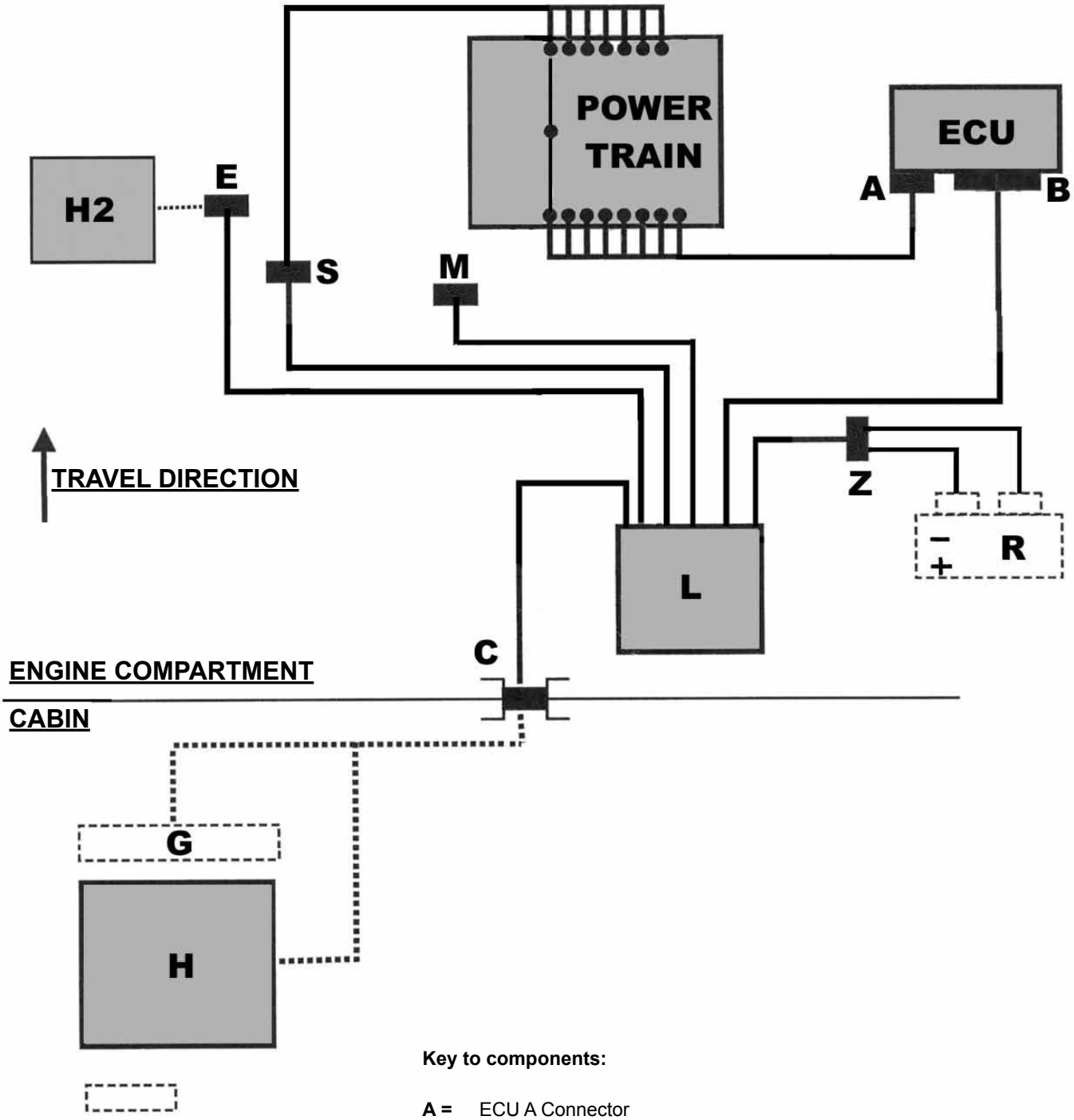

The dotted parts are not supplied by Lombardini.

Key to components:

A = ECU A Connector
B = ECU B Connector
C = Vehicle interface connector
E = Accessory connector (radiator electric fan, water in fuel filter sensor and electric fuel pump)
M = Diagnostic connector
G = Instrument panel
H = Accelerator pedal support equipped with potentiometer
H2 = Remote accelerator potentiometer (as an accessory)
L = Relay and fuse boxes (for engine)
S = Service connector
R = Battery
Z = Battery connector

https://truckmanualshub.com/

INSTRUMENT PANEL WIRING DIAGRAM

Wiring diagram of the instrument panel with accelerator pedal (for engines equipped with accelerator potentiometer inside the cabin)

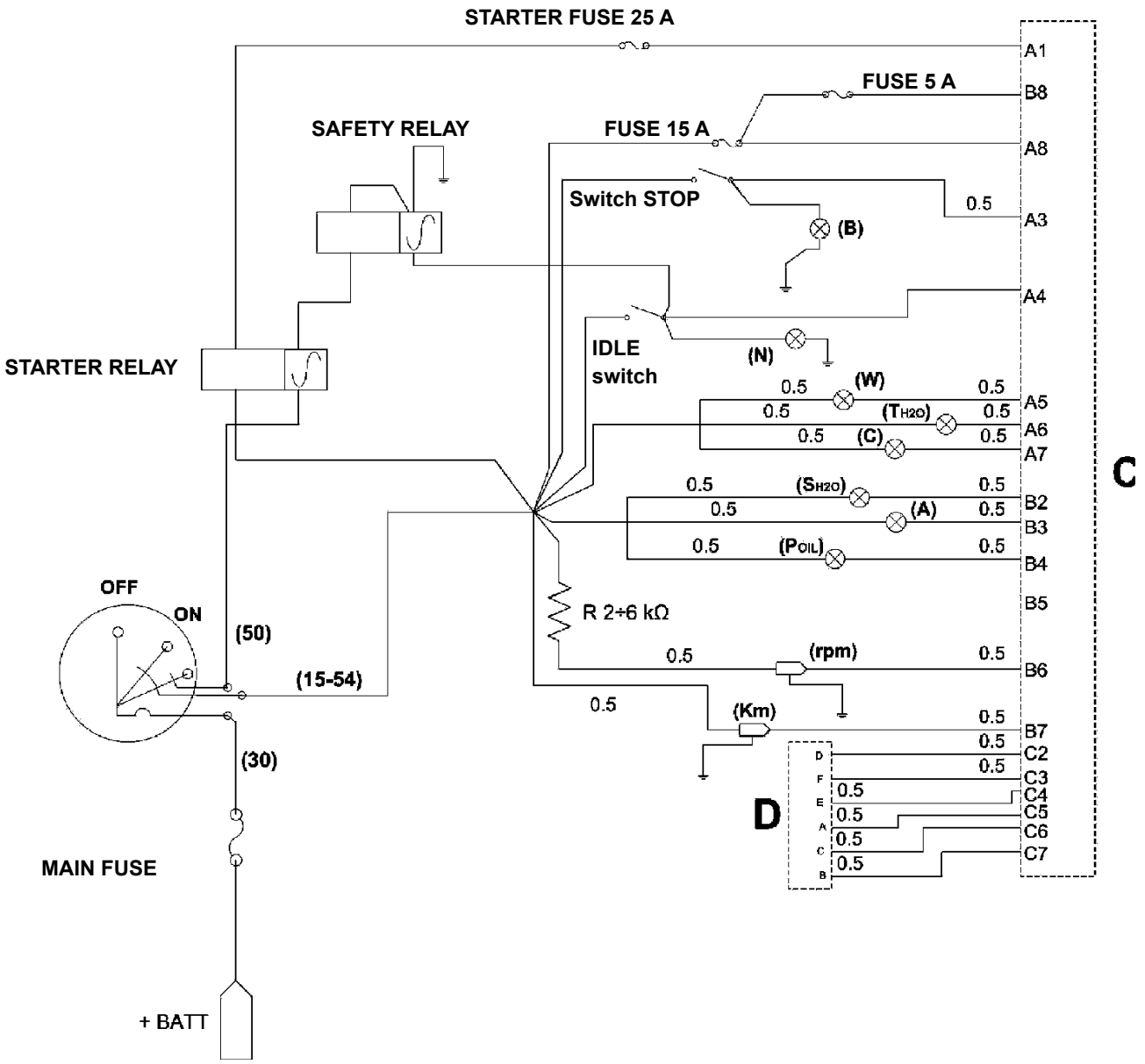

Key to components:

N = idle position indicator light
W = injection failure indicator light
TH_2O = water temperature indicator light
C = glow plugs indicator light
SH_2O = Indicator light for **H_2O** in fuel filter
A = alternator indicator light
Poil = oil pressure indicator light
B = stop indicator light/resistance 1kΩ/0.25 W

rpm = revolution indicator
Km = odometer
(30) = bat
(50) = key
(15-54) = Key - first trip
D = accelerator connector
C = cabin interface connector

https://truckmanualshub.com/

Wiring diagram of the instrument panel without accelerator pedal (for engines with accelerator potentiometer as an accessory)

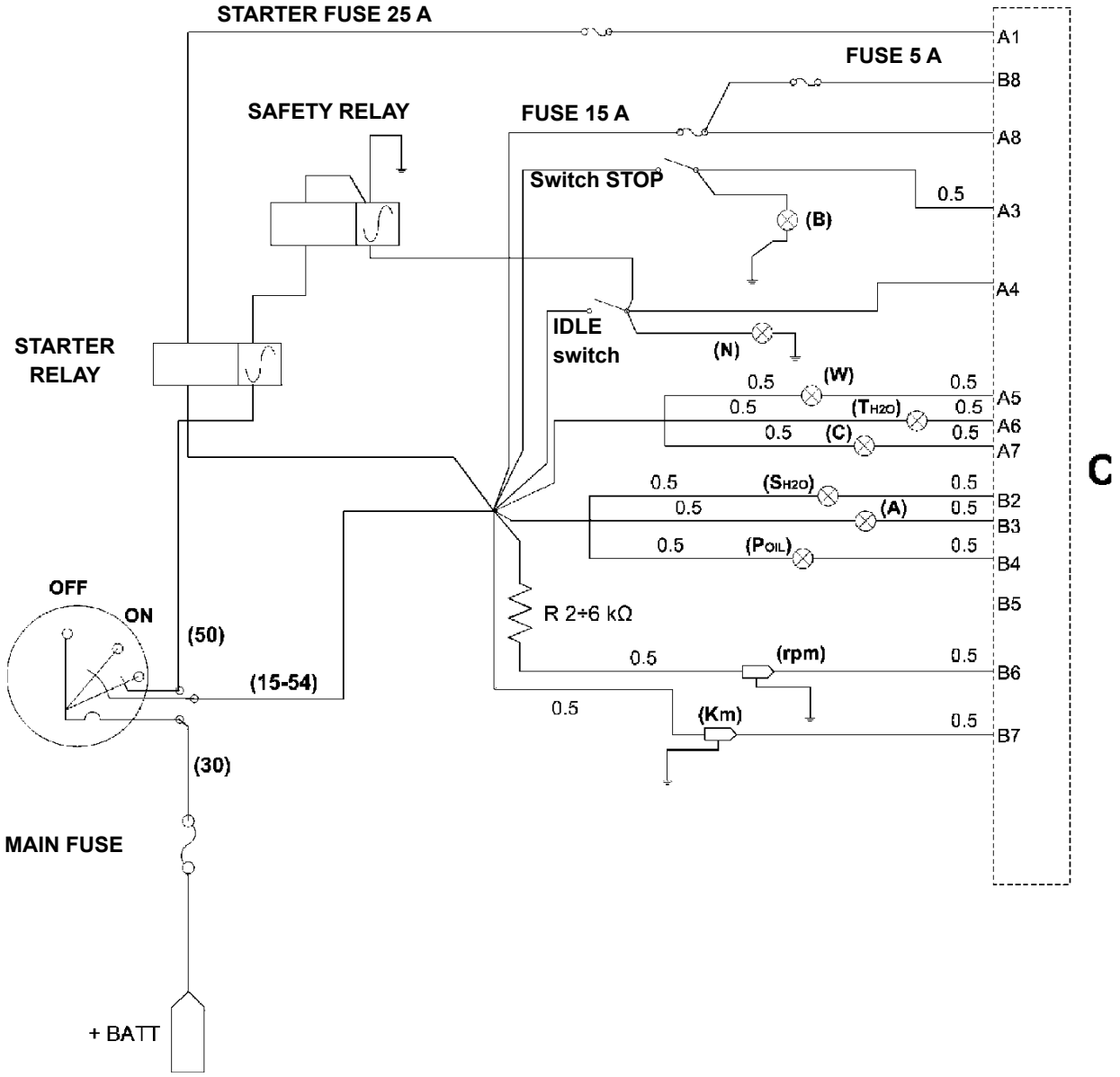

Key to components:

N = idle position indicator light
W = injection failure indicator light
TH_2O = water temperature indicator light
C = glow plugs indicator light
SH_2O = Indicator light for **H_2O** in fuel filter
A = alternator indicator light
Poil = oil pressure indicator light
B = stop indicator light/resistance 1kΩ/0.25 W

rpm = revolution indicator
Km = odometer
(30) = bat
(50) = key
(15-54) = Key - first trip
C = cabin interface connector

https://truckmanualshub.com/

ELECTRONIC ENGINE CONTROL WIRING DIAGRAM

Fuse/relay wiring diagram for engines with accelerator potentiometer inside the cabin

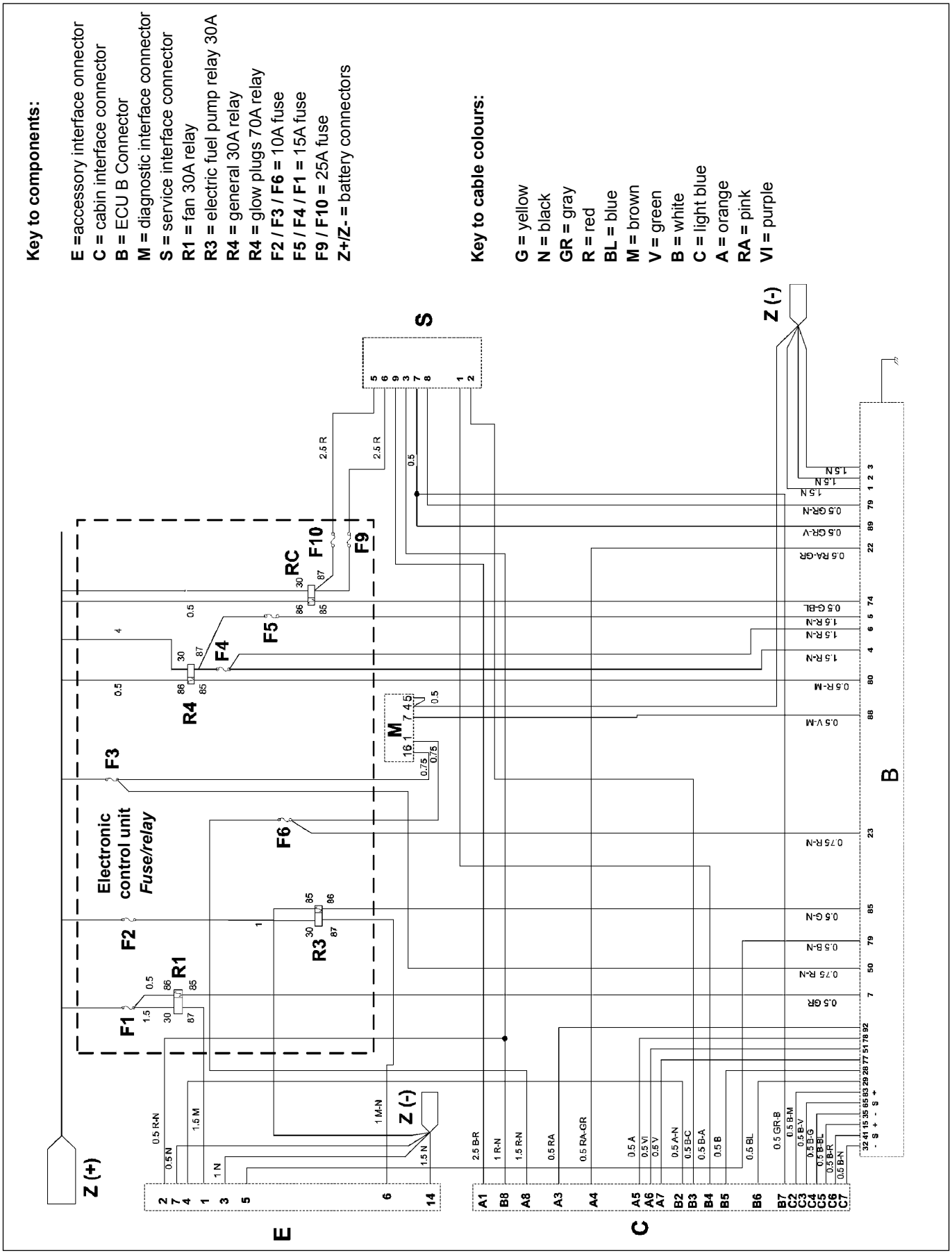

https://truckmanualshub.com/

Fuse/relay wiring diagram for engines with accelerator potentiometer supplied as an accessory

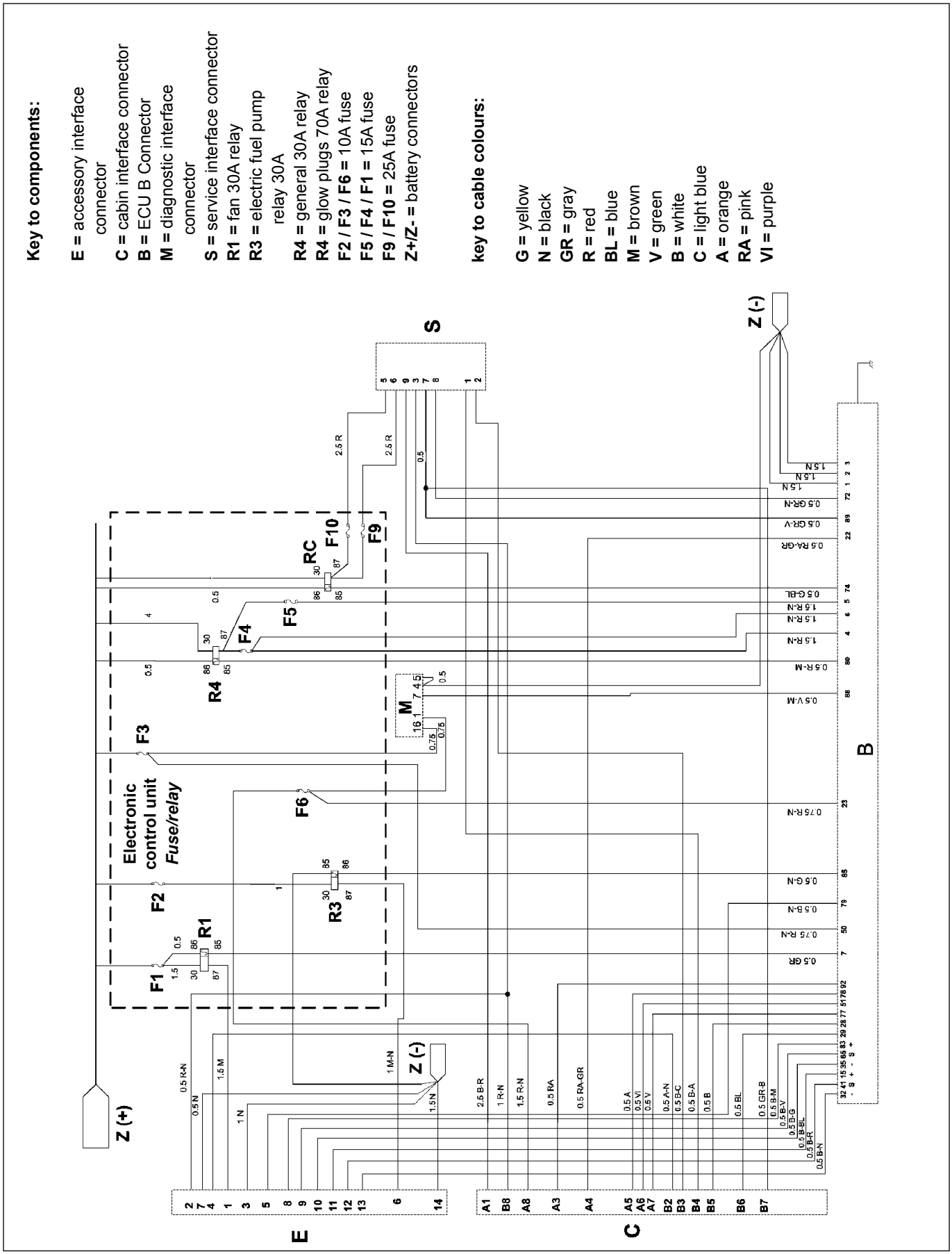

https://truckmanualshub.com/

ENGINE-VEHICLE DIALOGUE SYSTEM

Key 50
Odometer control
Revolution indicator control
Control for alternator indicator light
Control for oil low pressure indicator light
Control for glow plug indicator light
Control for injection failure indicator light
Control for coolant high temperature indicator light
Control for water in fuel indicator light
6-gangs accelerator pedal
Signal for stop pressed
Signal for gearbox in idle position

INSTRUMENT PANEL SCHEME

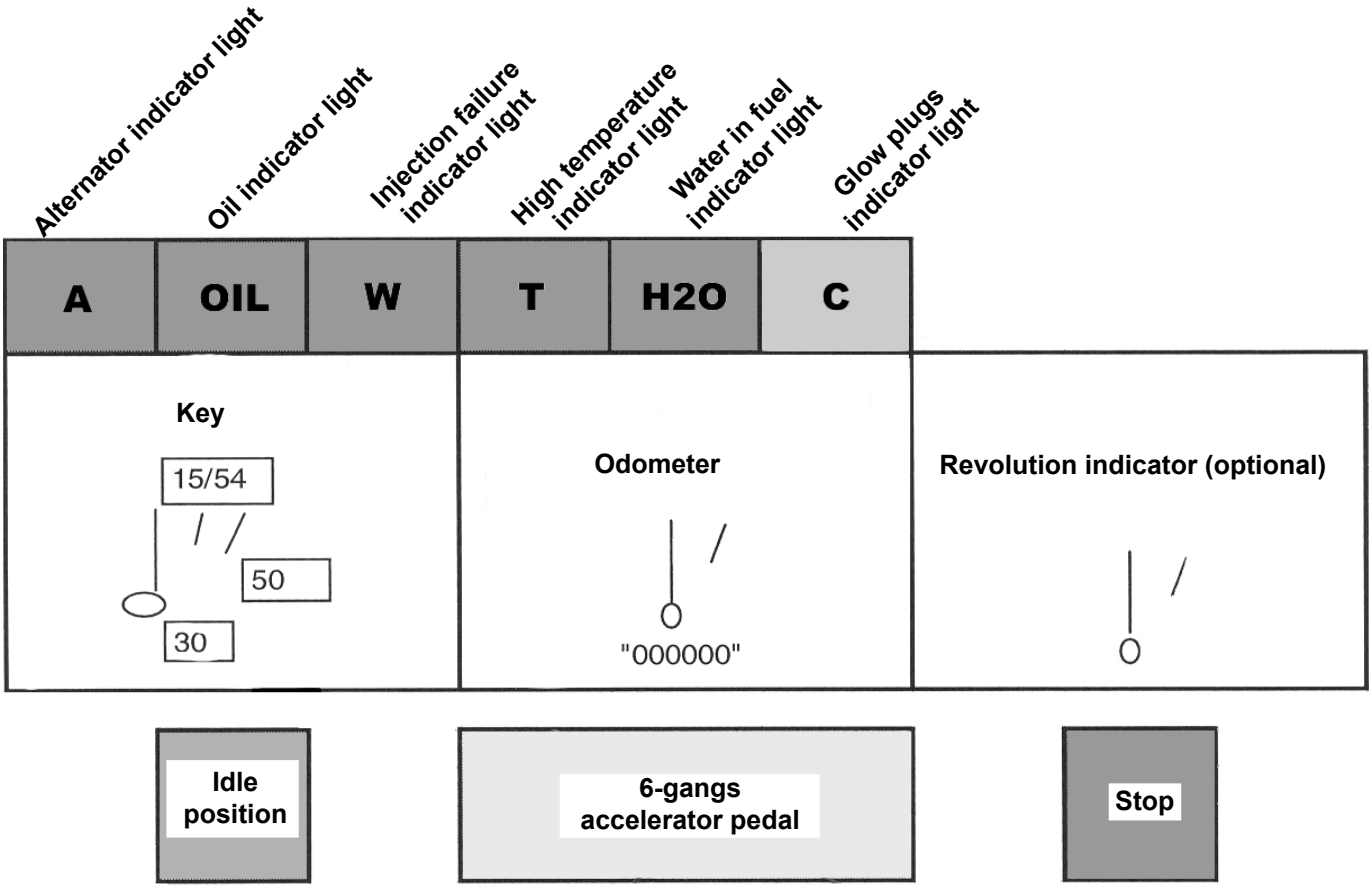

Speedometer-Odometer signal characteristics:

- 12-teeth phonic wheel on wheel axis
- Hall-effect sensor, 12 V power-supplied
- Squared waveform with 12 peaks 12 V per phonic wheel revolution (with Lombardini gearbox)

Revolution indicator specifications:

- Squared waveform with 2 peaks 12 V per engine revolution

https://truckmanualshub.com/

ENGINE ELECTRONIC CONTROL - WIRING HARNESS

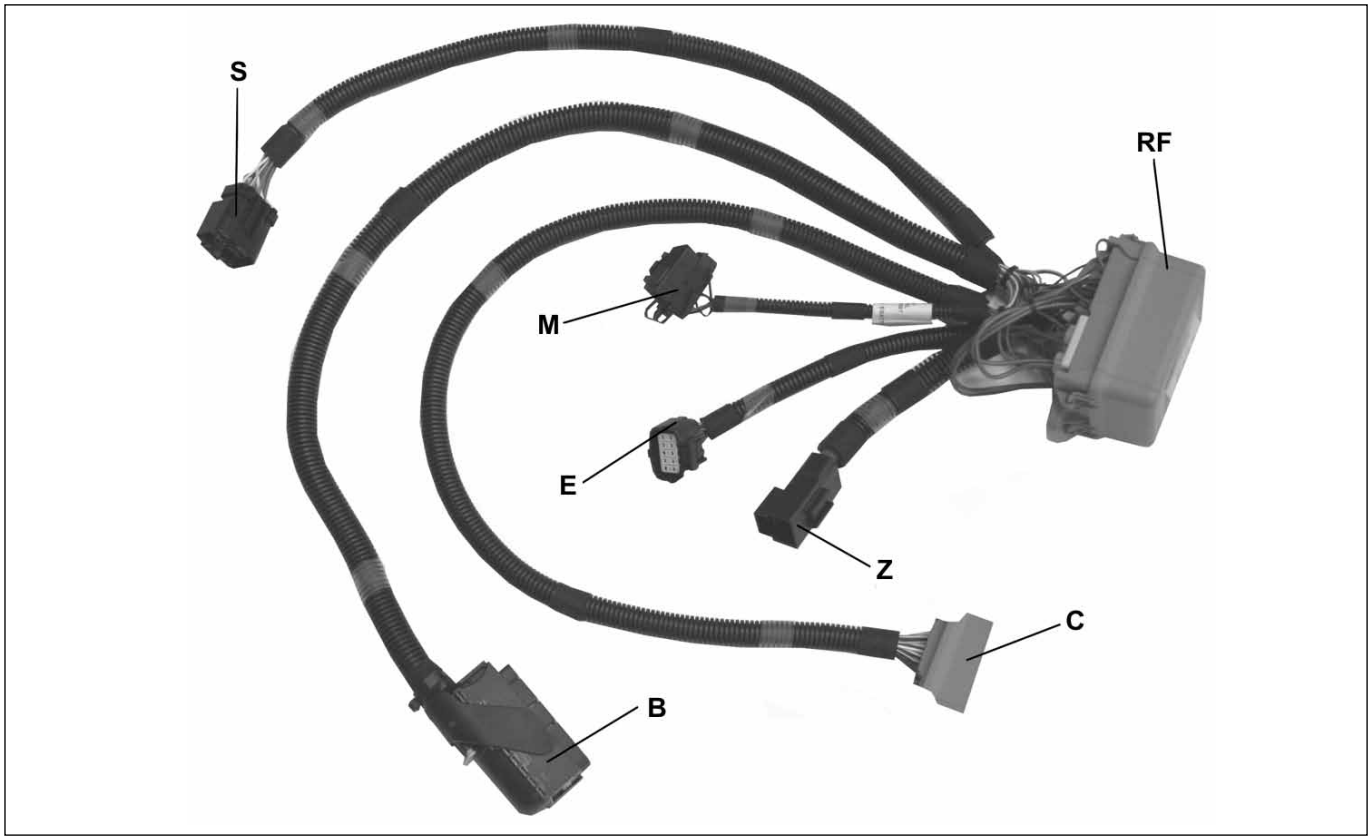

Rif.	Description
B	ECU **B** connector
C	Cabin connector
E	Accessory connector
M	Diagnostic connector
RF	Relay and fuse box
S	Service connector
Z	Battery connectors

Important

Components E and C differ according to the type of potentiometer (in cabin or as an accessory). Components E and C for engines with accelerator potentiometer inside the cabin will not work on engines with accelerator potentiometer as an accessory, and vice-versa.

RELAY AND FUSE BOX - DESCRIPTION

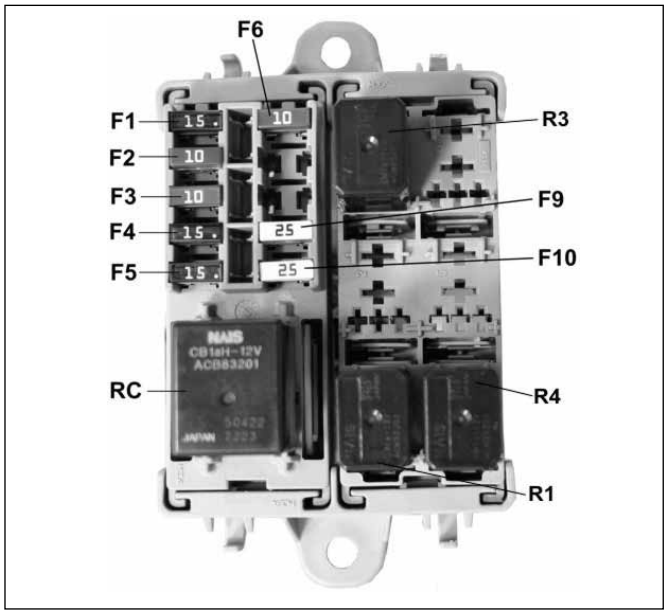

Rif.	Description
F1	Fan relay
F2	Electric fuel pump relay
F3	ECU B 50 - Diagnosis 16
F4	ECU B 4 - 6
F5	ECU B 5
F6	Diagnosis 1 - ECU B 23
F9	Glow plugs
F10	Glow plugs

Rif.	Description
R1	Fan relay
R3	Electric fuel pump relay
R4	General relay
RC	Glow plug relay

https://truckmanualshub.com/

SERVICE WIRING DIAGRAM

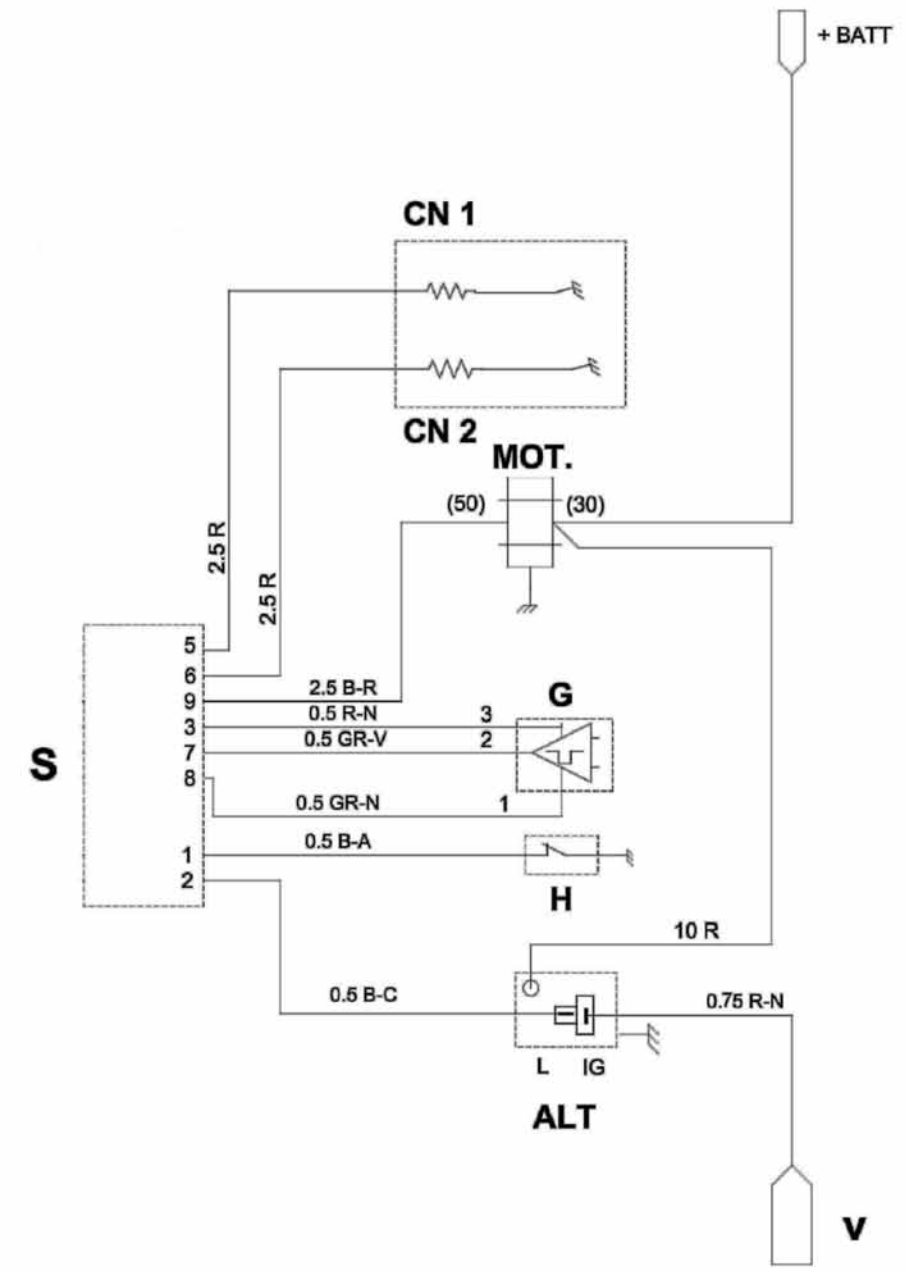

Key to abbreviations:

S **=** Service connector
G **=** 3-WAY SPEED SENSOR MTA C280
H **=** OIL PRESSURE SENSOR
V **=** PIN 55 CONNECTOR "A"
MOT **=** starter motor
ALT **=** alternator
CN 1 **=** glow plug 1
CN 2 **=** glow plug 2
(50) **=** Key
(30) **=** Bat

Key to cable colours:

A **=** orange
N **=** black
GR **=** gray
R **=** red
V **=** green
B **=** white
C **=** light blue

https://truckmanualshub.com/

SERVICE WIRING HARNESS

Wiring with Sensor speed **G**

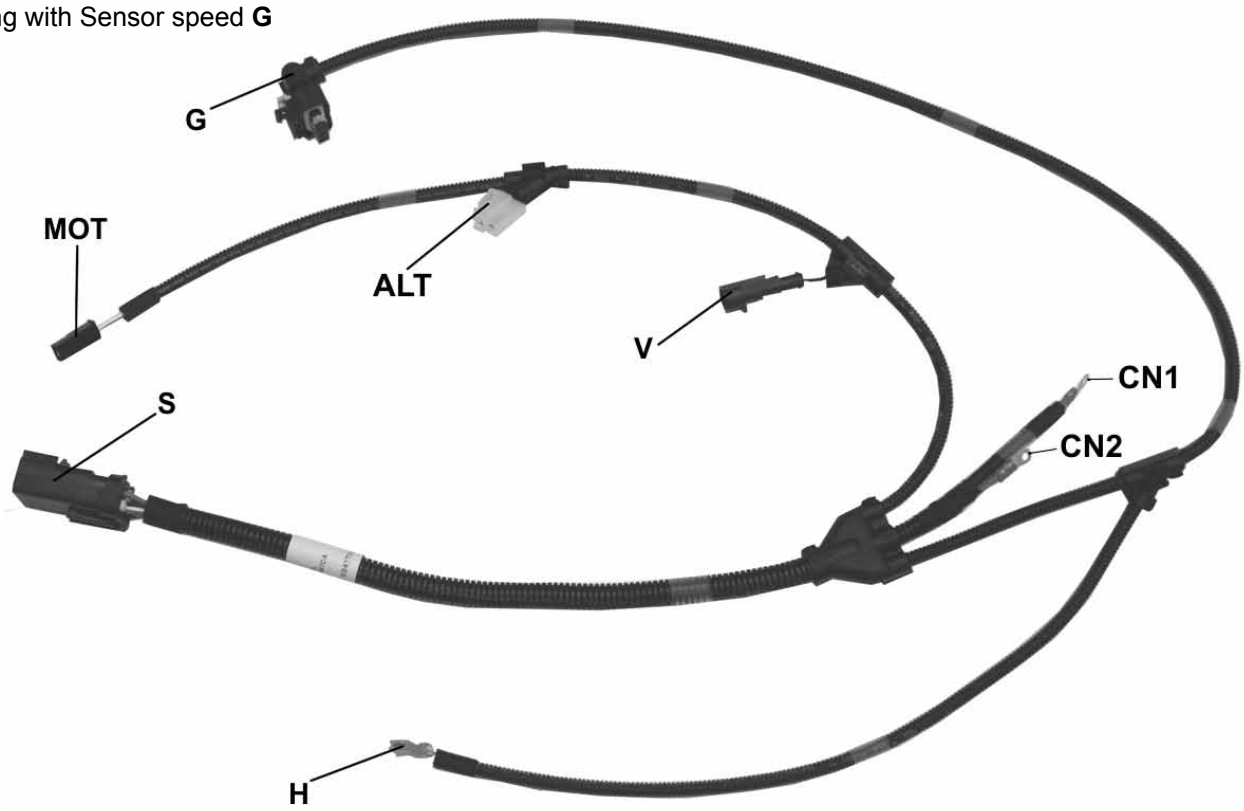

Wiring without Sensor speed **G**

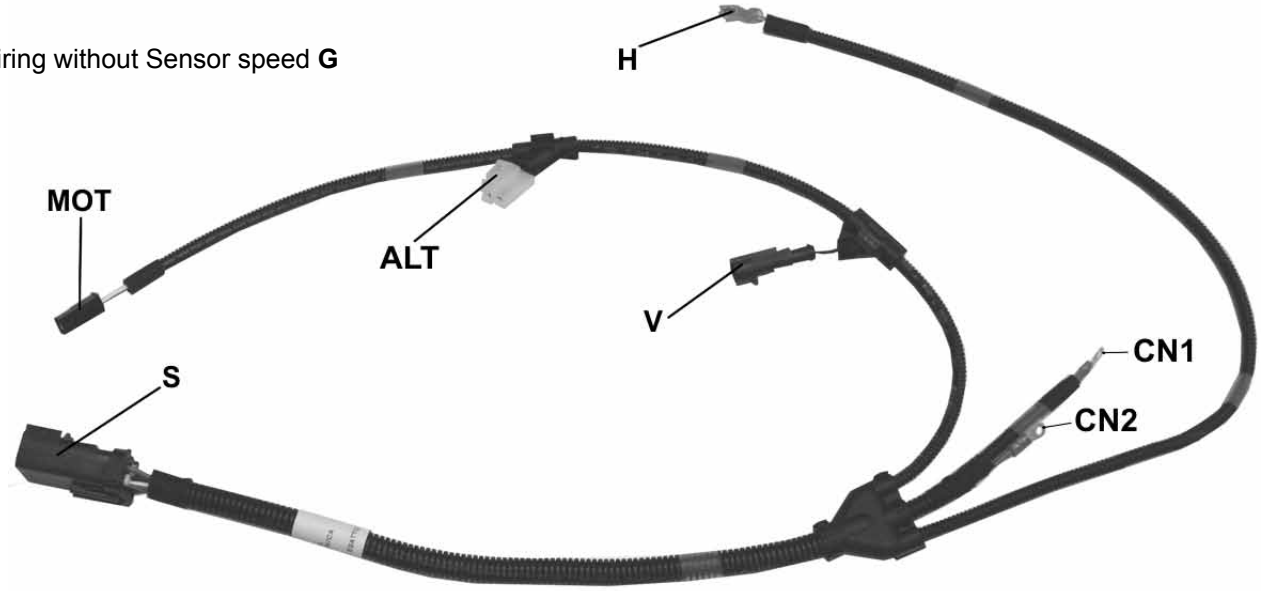

Rif.	*Description*
ALT	Alternator
CN1	Glow plug 1
CN2	Glow plugs 2
G	Speed sensor (connected to gearbox)
H	Oil pressure sensor
MOT	50 of starter motor
S	Service connector
V	ECU A alternator wiring harness

https://truckmanualshub.com/

ENGINE WIRING DIAGRAM

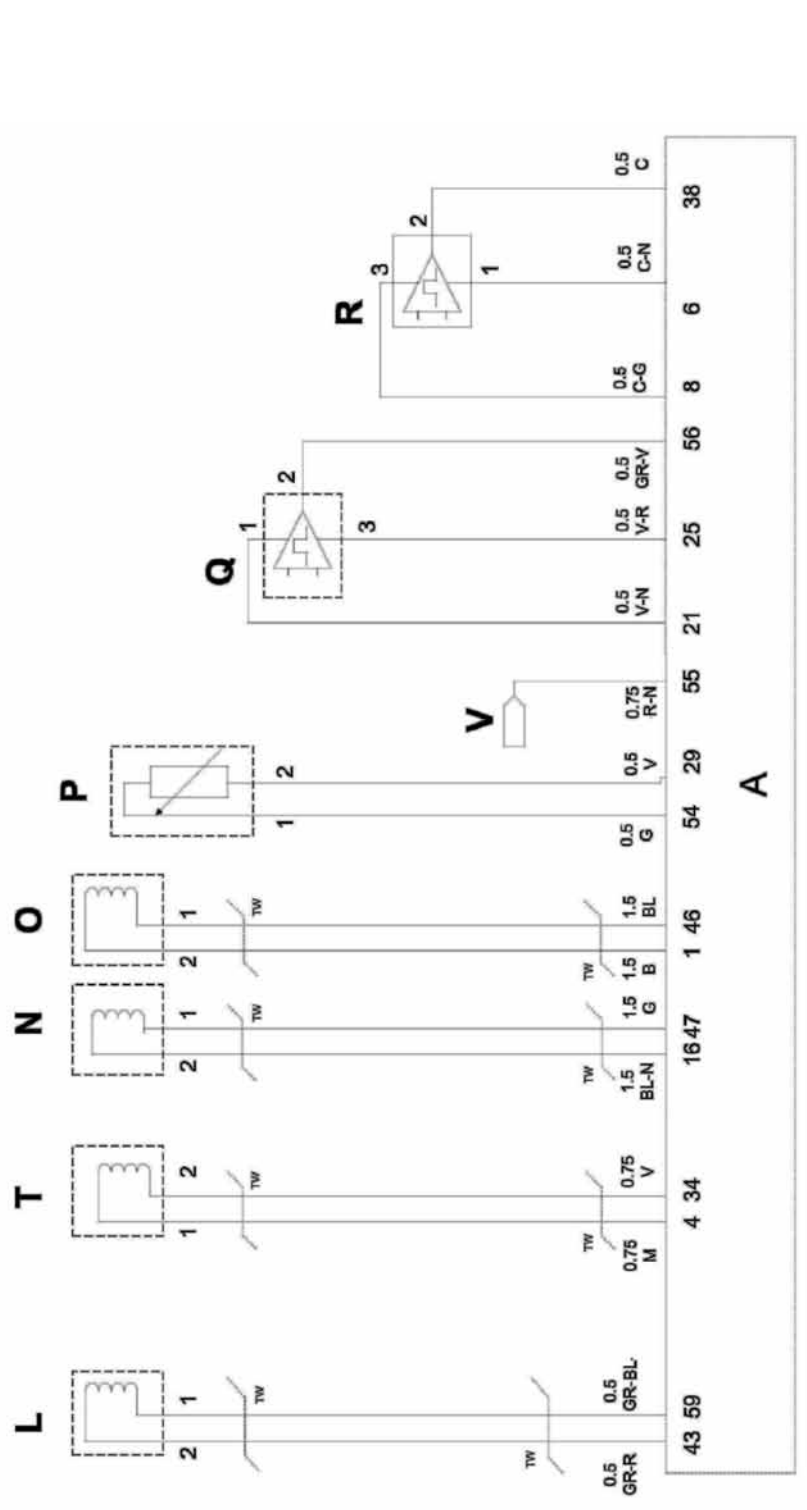

L = Crankshaft sensor (RPM) J.P.T. FExFE black - high spring
T = Rail pressure regulator - Bosch Purple
N = Cylinder 1 injector - Bosch Purple
O = Cylinder 2 injector - Bosch Purple
P = H2O temperature sensor J.P.T. FExFE gray - low spring
V = alternator PIN "IG"
Q = Phase sensor - Bosch Purple
R = Rail pressure sensor - Bosch Yellow
A = ECU A

TW = "twisting" 40 spires/m
(30) = Battery
(50) = Key
(15-54) = Key - first trip

Key to cable colours

G = yellow
N = black
GR = gray
R = red
BL = blue
M = brown
V = green
B = white
C = light blue

https://truckmanualshub.com/

ENGINE WIRING HARNESS

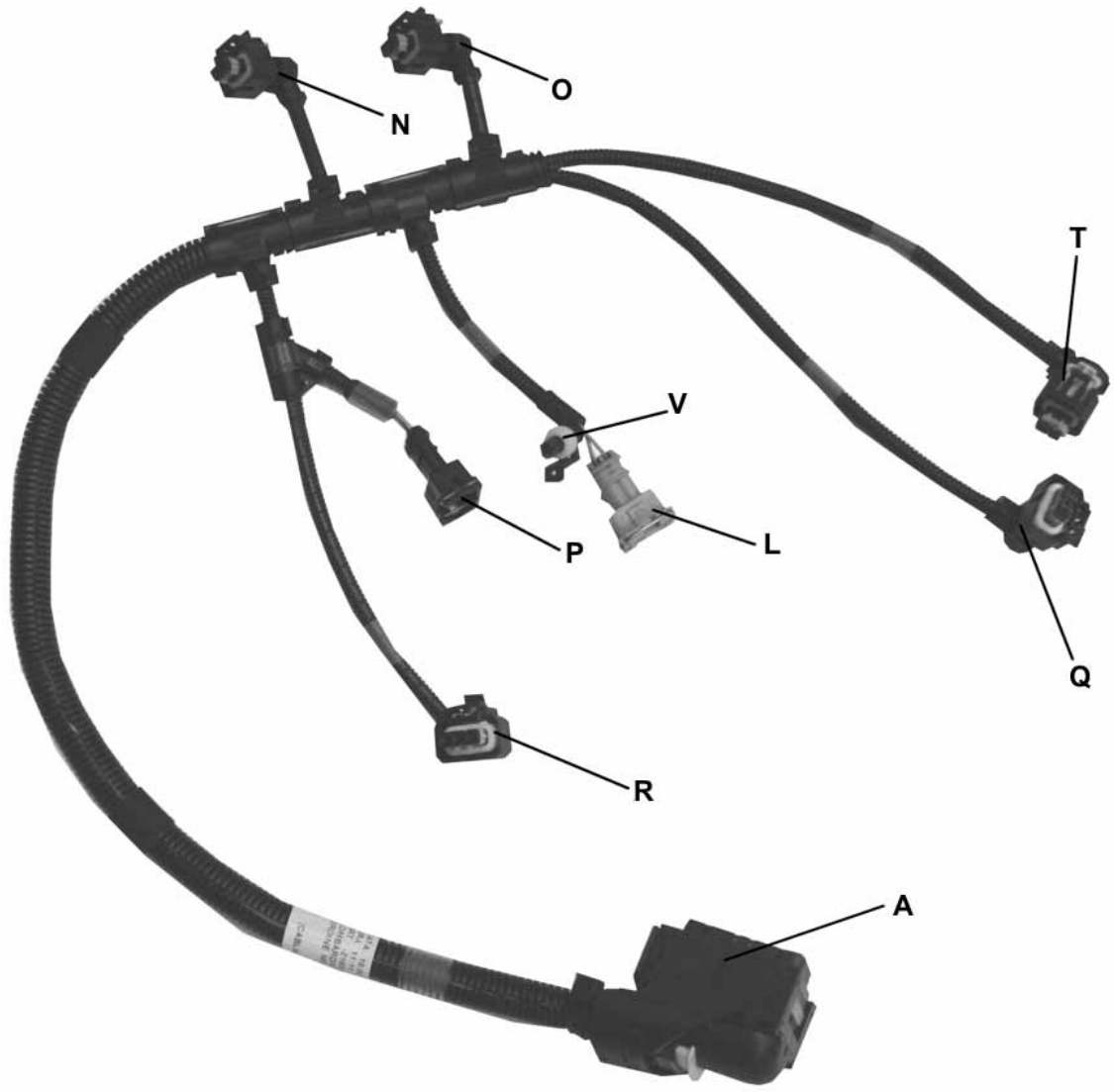

Rif.	Description
A	ECU A engine
L	Speed sensor
N	Electronic injector connector
O	Electronic injector connector
P	Coolant temperature
Q	Phase sensor
R	Rail pressure sensor
T	Rail pressure regulator
V	Alternator management on service wiring harness

https://truckmanualshub.com/

ACCESSORY WIRING DIAGRAM

Accessory wiring diagram without accelerator pedal connector (for engines with accelerator potentiometer inside the cabin)

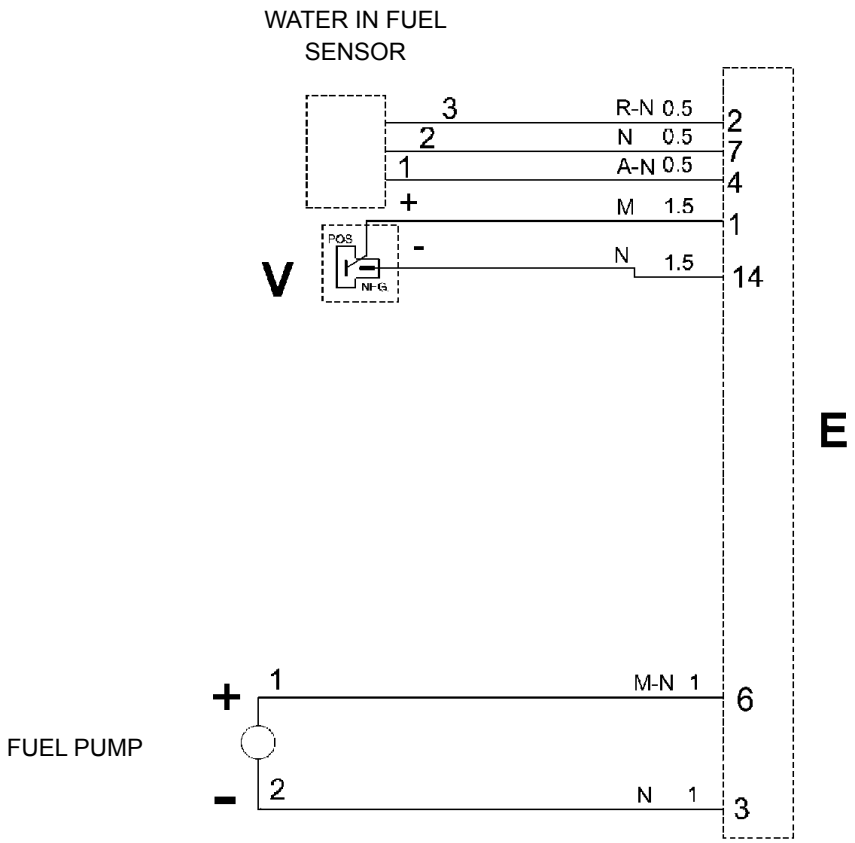

Key to cable colours:

G **=** yellow
N **=** black
GR **=** gray
R **=** red
BL **=** blue
M **=** brown
V **=** green
B **=** white
C **=** light blue
A **=** orange
RA **=** pink
VI **=** purple

E = accessory interface connector
V = fan

https://truckmanualshub.com/

Accessory wiring diagram with accelerator pedal connector
(for engines with accelerator potentiometer as an accessory)

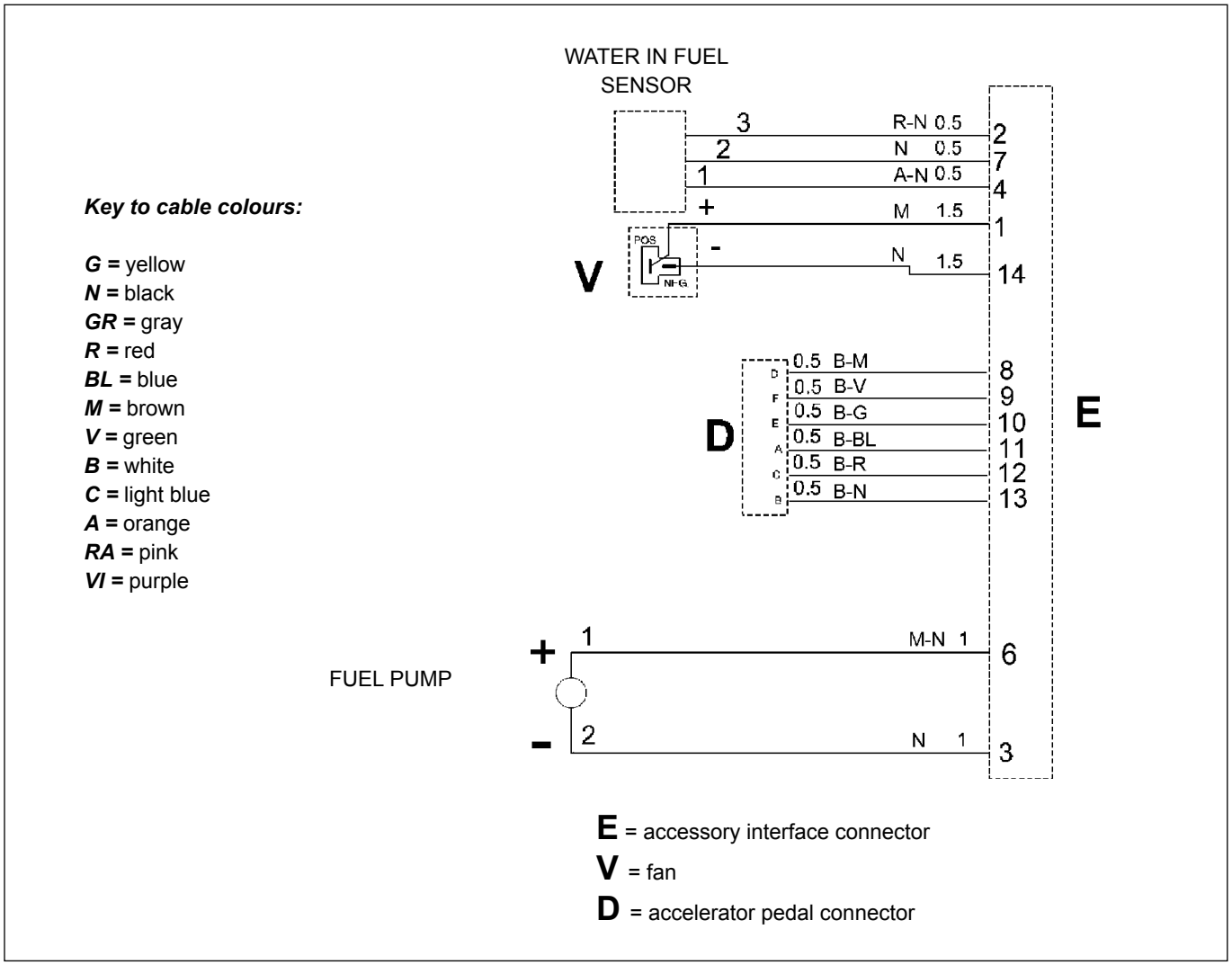

CONNECTORS REQUESTED FOR INTERFACING WITH LOMBARDINI WIRING HARNESS

Description	*Rif.*	*Manufacturer*	*Reference Code*
Cabin interface connection	C	FRAMATOME CONNECTORS	HCCMHPE24BKAFSV
Accelerator pedal connection		DELPHI	15326829
Accessory interface connection	E	TYCO	Connector: 174657-2 Terminals: 174658-7
Power supply connection	Z	MTA Spa	45.40300
Water in fuel filter sensor connection		TYCO	Connector: 282191-1

- Battery not supplied by Lombardini
- Recommended battery: 12 V 44 Ah / 400 A

Important
- Never disconnect the battery cables immediately after engine stop.

https://truckmanualshub.com/

COMPONENTS OF THE ENGINE ELECTRONIC CONTROL SYSTEM

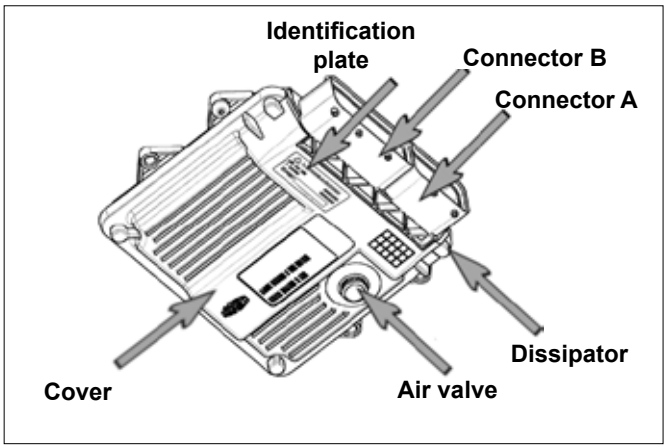

ECU (Electronic control unit)

Control unit for engine and vehicle management.

Important

The control unit must be used only with the calibration defined by Lombardini s.r.l. for every single engine.

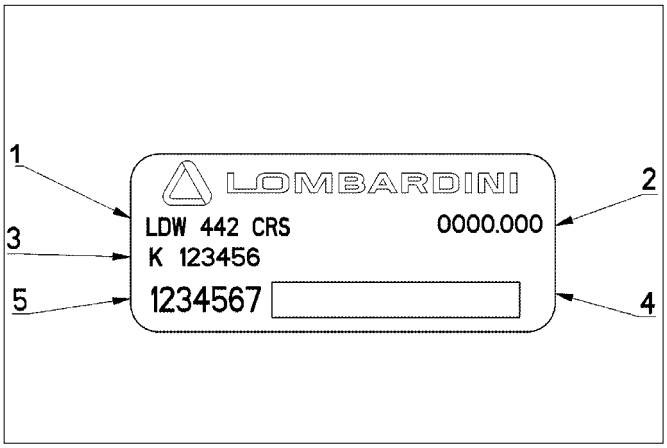

Control unit identification plate
(Example)

1. Engine type
2. Approval code
3. Customer version number (K no.)
4. Engine s/n bar code
5. Engine s/n

- **The control units are not interchangeable nor modifiable.**
- **Each control unit is accompanied by its adhesive identification plate.**

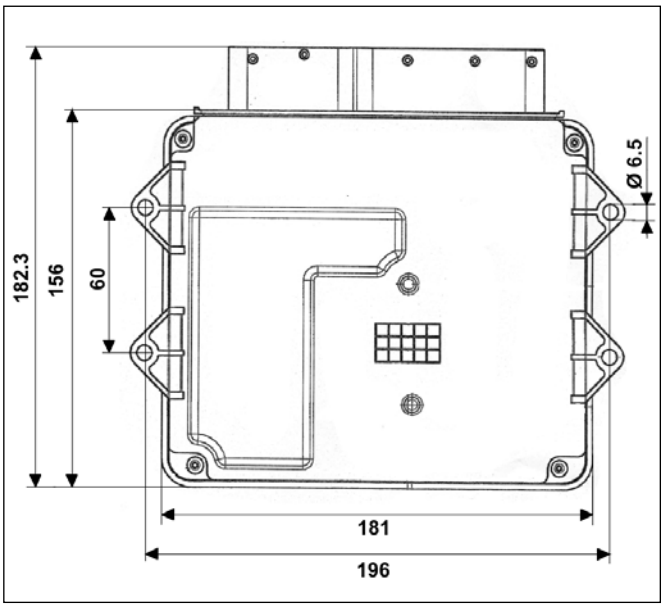

Installation prescriptions

- Protection degree: 1P 6K/9K.
- Max continuous duty temperature: 115°C.
- Storing temperature: 125°C.
- Do not install the control unit on the engine. Always install it on the vehicle frame, in a cool area protected against shocks and humidity.
- The ECU must always be connected to ground, for example by means of the four fixing points of the ECU to the vehicle bracket. Make sure the connection is good (avoid painted or insulated parts).
  As an alternative, connect one of the fixing points of the ECU mechanics to a specific grounding plate, by means of a cable having a section of 4 mm2 and length equal or below 300 mm. Always make sure the electrical contact is correct.
- When choosing the position of the control unit in an application, check that the air valve is protected against jets of battery liquid or direct water jets during engine washing.
- To avoid infiltrations in the wiring harness, make sure the connection area (ECU connector) is not the lowest point of the wiring harness.

https://truckmanualshub.com/

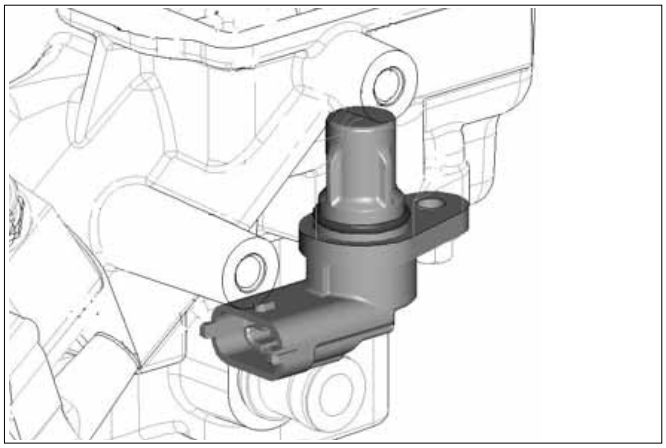

HALL-EFFECT PHASE SENSOR

Installed on the cylinder head.
This sensor reads the signal by means of a phase plate on the camshaft.
Its function consists in recognizing the correct phase of the two pistons which are carrying out the upstroke and downstroke at the same time.
The air gap value is 0.3÷1.2 mm.
Tighten the plate fastening screw to 10 Nm.

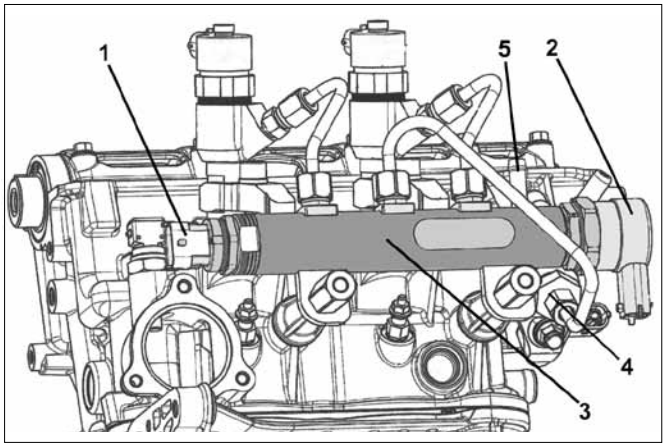

COMMON RAIL

Components:

1. Pressure sensor
2. Pressure regulator
3. Common rail
4. High-pressure pump
5. Pressure regulator return line

The fuel is put under pressure by the high-pressure pump, driven by the roller tappet in contact with the camshaft.
The cam driving the pump has a double lift that provides a delivery for every injection.
The quantity of fuel put under pressure by the pump always exceeds the real needs of fuel.

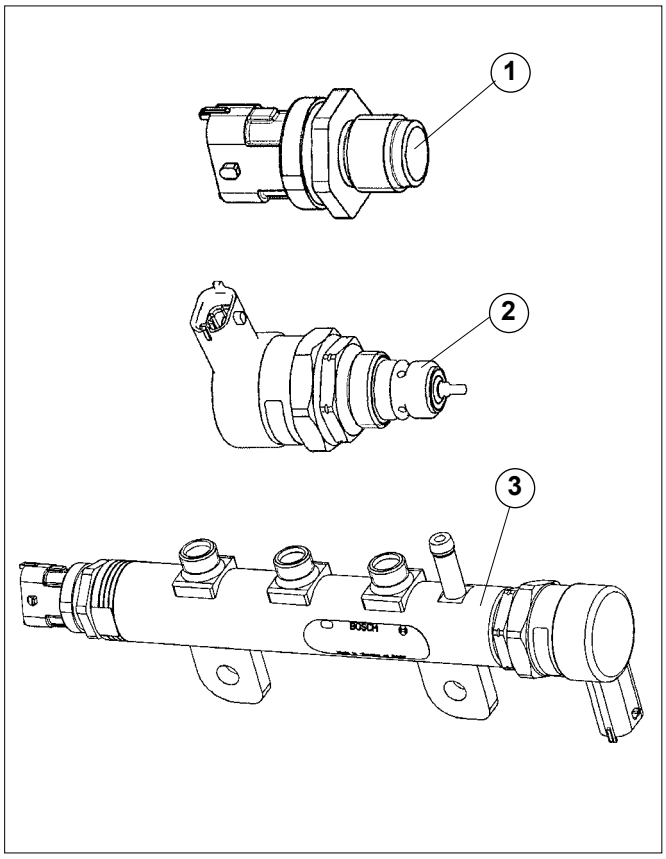

1 - Pressure sensor

It sends a feedback signal to the injection control unit to adjust the injection pressure and duration.
When reassembling, tighten to a torque of 140 Nm.

2 - Pressure regulator

According to the signals sent by the engine control unit, it adjusts the pressure inside the rail by means of a ball valve that discharges the fuel in the low pressure line connected to the tank.
The regulator has an internal solenoid controlled by the engine control unit.
When the duty cycle is at 0%, the solenoid is not powered and the rail has a minimum pressure which is due to the pre-load of the ball valve spring.

3 - Rail

Its internal volume has been enhanced to obtain the best compromise possible between: (1) the need of minimizing the pressure peaks resulting from the cyclicity of the high-pressure pump delivery and the opening of the electronic injectors on the one hand, and (2) the improved response speed of the system to the requests of the engine control unit on the other hand.

https://truckmanualshub.com/

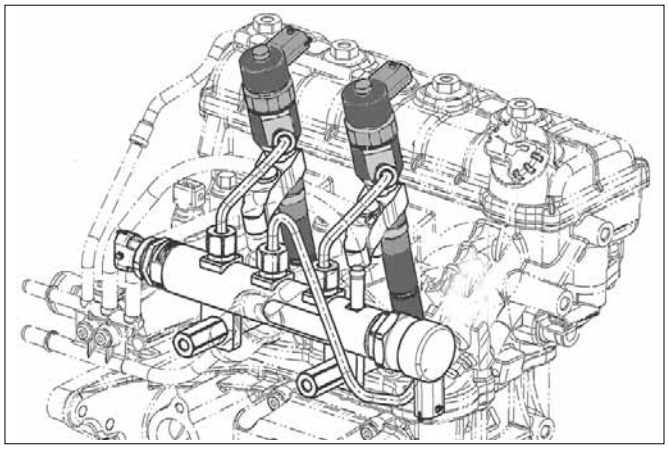

ELECTRONIC INJECTORS

The electronic injectors are assembled on the cylinder head and are controlled by the injection control unit.

Electronic injector operating conditions	
Operating pressure	250 ÷ 1600 Bar
Return circuit pressure	0,3 ÷ 0,4 Bar
Blow-by pressure	1700 ÷ 1800 Bar
Fuel temperature	-30 ÷ 115° C
Over-pressure temperature (return)	max 125° C
External temperature	-30 ÷ 120° C
No. of holes and diameter	5 x 0,123 mm

IMA Management

During the test phase, the characteristics of the injectors are tested under different conditions of pressure/delivery.
Any injector that does not comply with a specific standard is discarded. The approved injectors are classified using a 9-digits alphanumeric code (IMA code), marked by means of laser-writing on the upper part of the electromagnet (**pos. A**).
This procedure allows combining the manufacturing characteristics of each injector with a specific software strategy of the engine control unit, thus improving the injector performances and reducing the polluting emissions.
The IMA procedure allows recovering the manufacturing tolerances of each injector tested.
Any time one or more injectors (or the ECU itself) are replaced, the new codes have to be stored in the memory to implement the corrections.
When installing the control unit, the single code has to be stored. In case of replacement of one or more injectors, the diagnostic tool must be used to enter the code of the new injector (see IMA code storing on page 142).

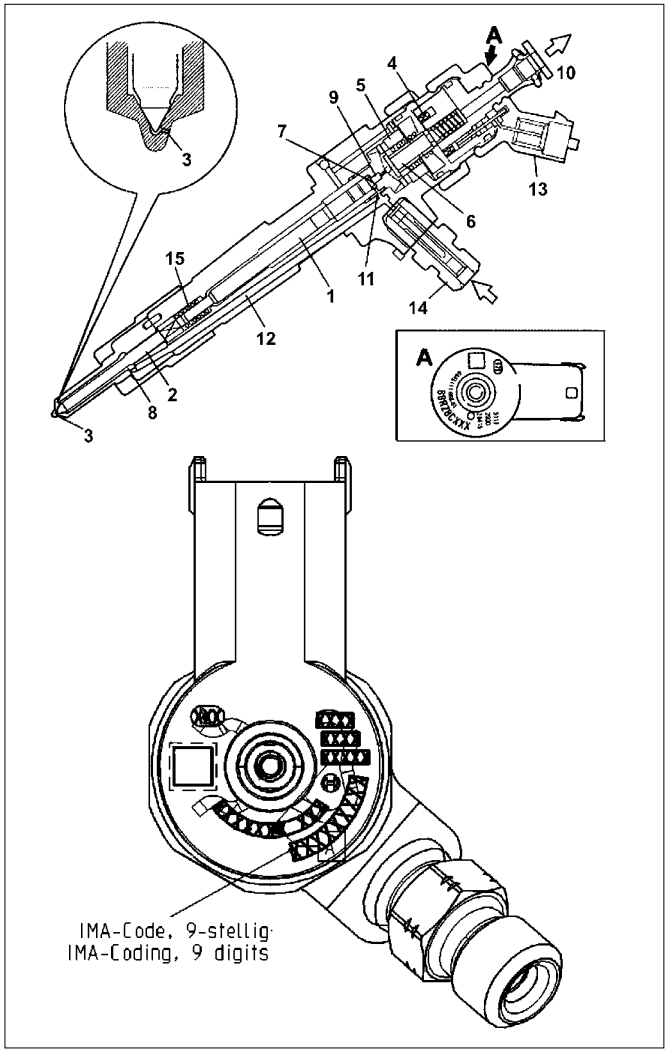

Main components of the electronic injector

A IMA code

1. Pressure rod
2. Needle
3. Nozzle
4. Coil
5. Pilot valve
6. Ball valve
7. Control area
8. Supply volume
9. Control volume
10. Fuel return (low pressure)
11. Control line
12. Supply line
13. Electrical connection
14. High-pressure fuel inlet union
15. Spring

Injector cleaning for new use

Immerse the injector, by keeping it in upright position, in an ultrasonic bath. Immerse it up to below the high-pressure union.
If necessary, clean the injector body and the nozzle sealing surface using a fine emery cloth to remove any residues left.
It is absolutely forbidden to remove the covers to clean the injector. No manual and/or mechanical cleaning of the nozzle is allowed.

https://truckmanualshub.com/

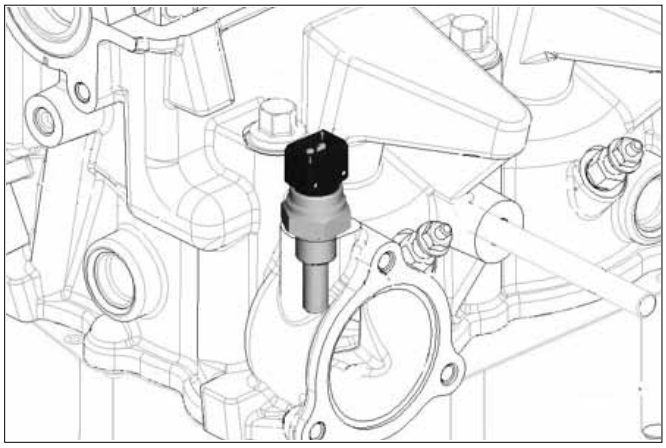

WATER TEMPERATURE SENSOR

Water temperature sensor of the cooling circuit, fixed to the thermostat case.
It is used by the ECU to manage the signal for the high-temperature indicator light and to control the electric fan of the coolant radiator.
Indicator light switch-on temperature 106°C - 108°C.

❍ Tighten the water temperature sensor to a torque of 20 Nm.

CHARACTERISTICS		
Temp ° C	Rm in K Ω	Rm ax K Ω
-40	38.313	52.926
0	5.227	6.623
+140	0.067	0.076

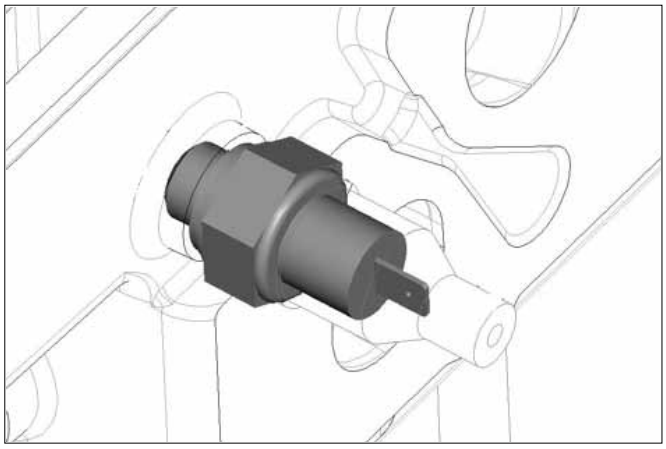

OIL PRESSURE SENSOR

Assembled on the cylinder head at the end of the lubrication circuit.
It is a NC sensor, set to 0.3 bar ± 0.15.
It directly controls the indicator light on the vehicle instrument panel by closing the circuit to ground when the oil pressure is low.

https://truckmanualshub.com/

ACCELERATOR POTENTIOMETER INSIDE THE CABIN (PEDAL-INTEGRATED)

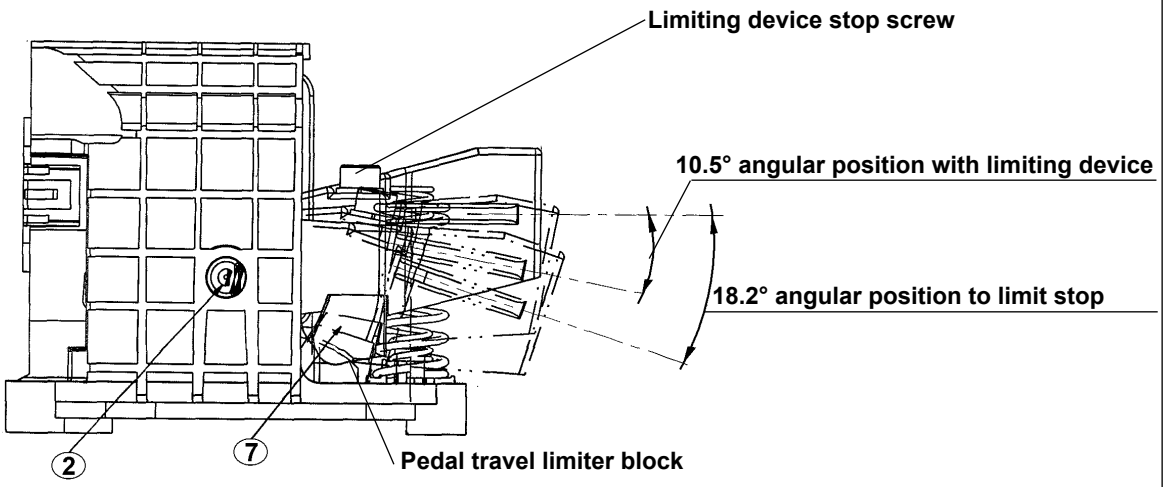

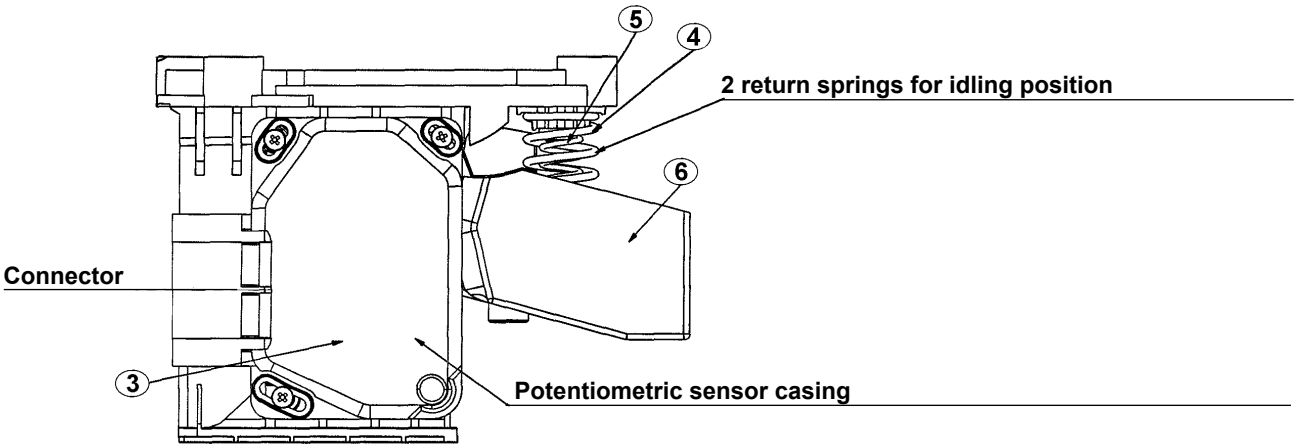

KEY TO COMPONENTS

2. Pivot
3. Complete potentiometer
4. Big spring
5. Small spring
6. Pedal linking
7. Pedal travel limiting device

ACCELERATOR POTENTIOMETER AS AN ACCESSORY (REMOTE CONTROL WITH ACCELERATOR CABLE)

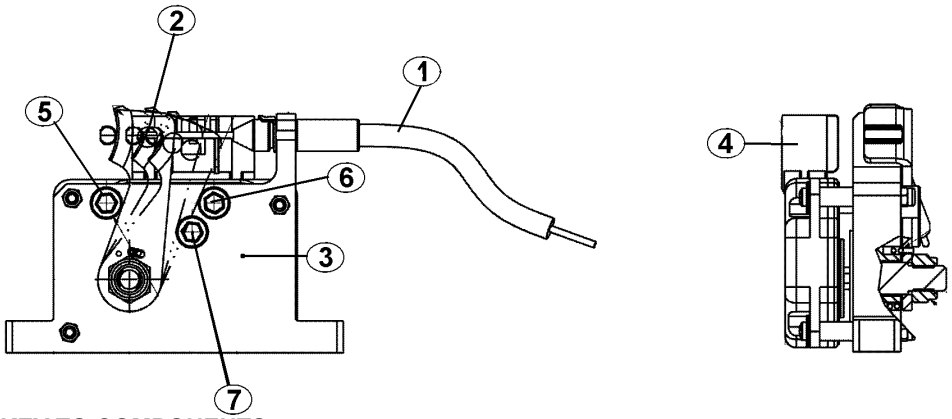

KEY TO COMPONENTS

1. Accelerator cable
2. Potentiometer control lever
3. Complete potentiometer casing
4. Potentiometer connector
5. Limit stop for idling position
6. Limit stop for maximum position
7. Pedal travel limiting device

https://truckmanualshub.com/

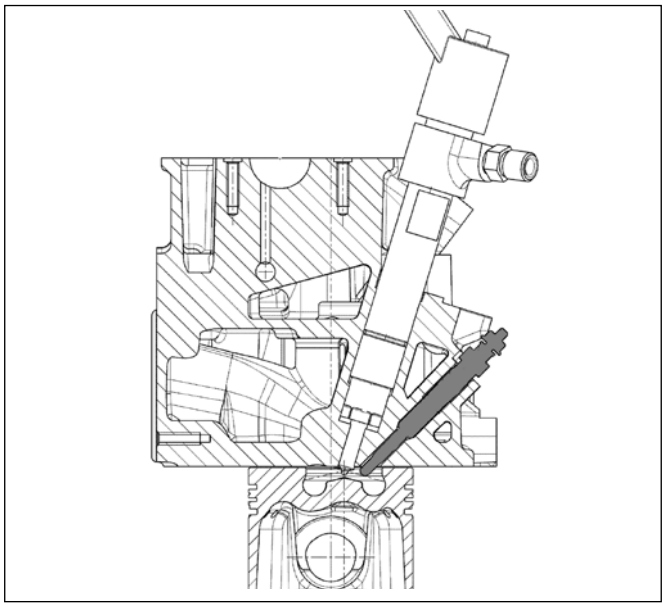

GLOW PLUGS

They are assembled on the cylinder head and have direct access to the combustion chamber.
Pre- and post-heating times are managed by the ECU according to the coolant temperature, as shown in the following tables.

Pre-heating time:

°C	-25	-20	-10	0	10	20
sec	20	20	15	5	5	5

Distraction time:..... 35 sec

Post-heating time:

°C	-20	-10	0	15	30	40
sec	120	120	120	90	60	30

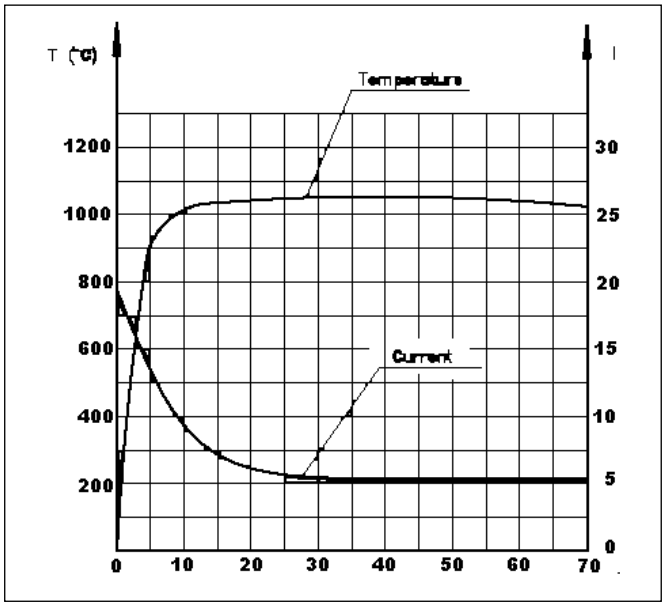

Glow plug absorption curve

Rated voltage: ..... 11.0 V
Operating voltage: ..... min 7.0 V - max 13.5 V
Absorbed current: ..... max 30 A

Tighten on cylinder head to 15 Nm.
Tighten the supply cable fastening nut at 1.5 Nm.

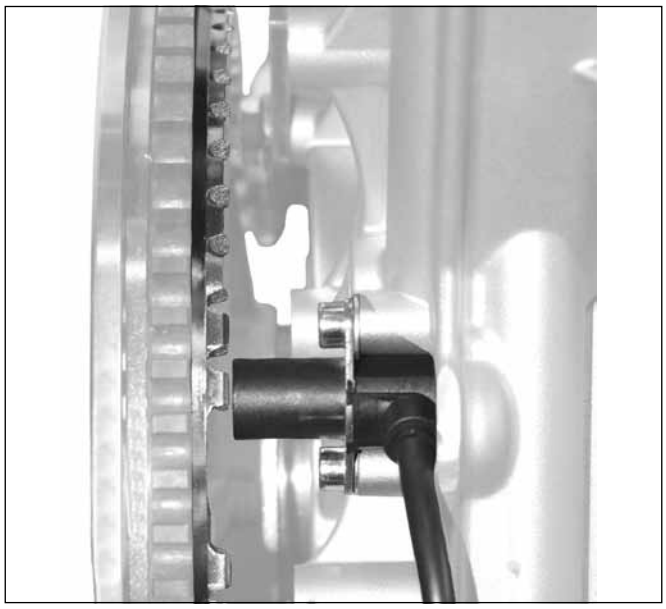

SPEED SENSOR

It is assembled externally on the crankcase.
It reads the signal provided by the phonic wheel (60 - 2 teeth) integrated in the flywheel.
The air gap is 0.25 - 1.10 mm. It can be adjusted by means of shims of 0.5 mm.

https://truckmanualshub.com/

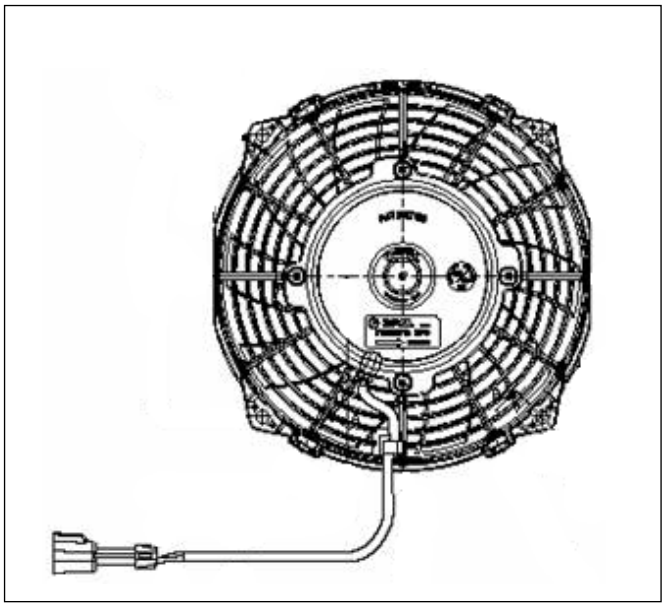

ELECTRIC FAN

The electric fan activation is controlled by the control unit.
The electric fan current absorption cannot exceed 12 A.
If the electric fan and radiator are not supplied by Lombardini, they must receive the approval of Lombardini's Application Department.

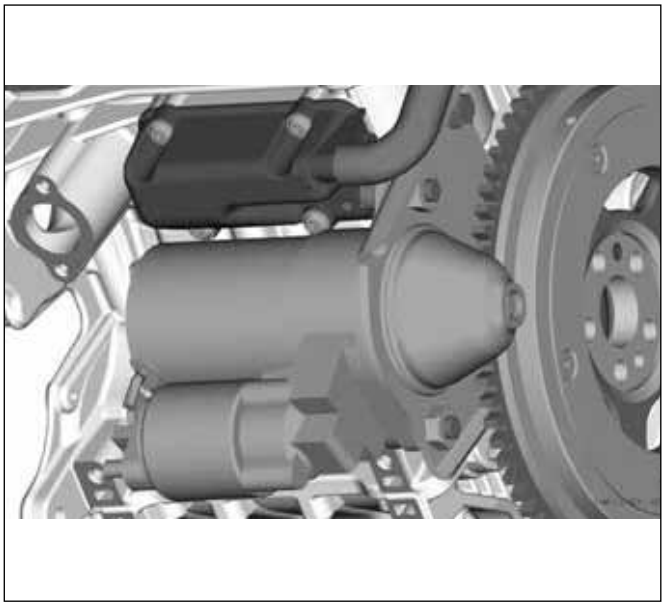

STARTER MOTOR

Features:

type Bosch 12V
Power ..... kW 1.1
Rotation direction ..... clockwise

https://truckmanualshub.com/

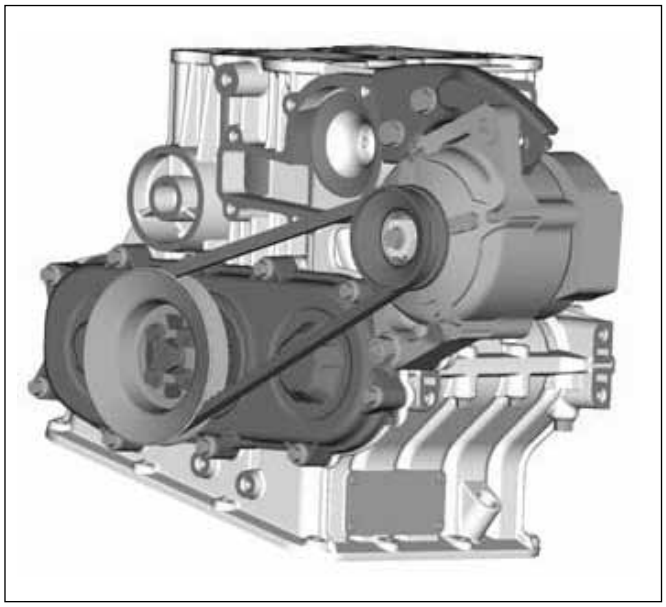

ALTERNATOR

External, belt-driven by crankshaft.
Rotation ratio: 1:1.6.

40A External alternator load curve graph

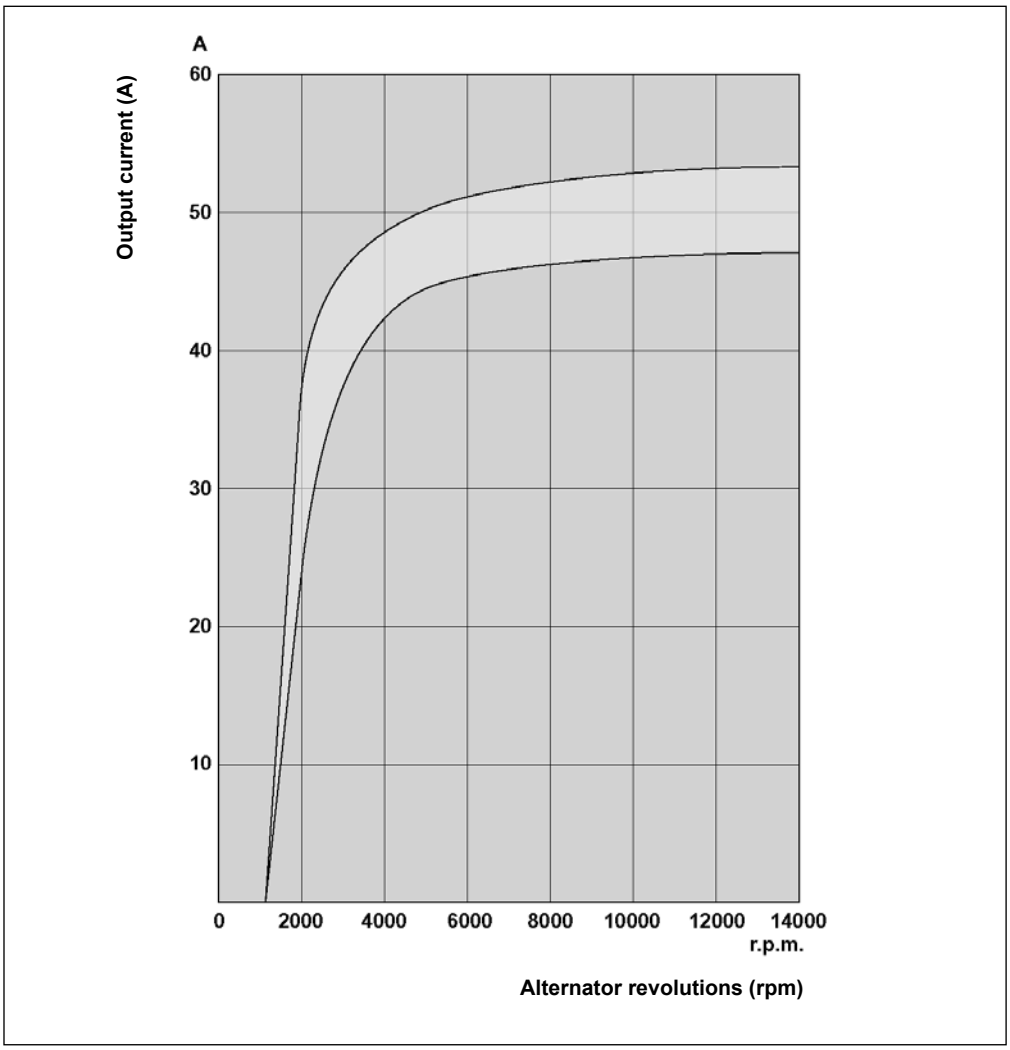

Measured after reaching thermal stabilization at 25°C and under constant voltage of 14 V.

https://truckmanualshub.com/

https://truckmanualshub.com/

https://truckmanualshub.com/

HANDLING AND LIFTING

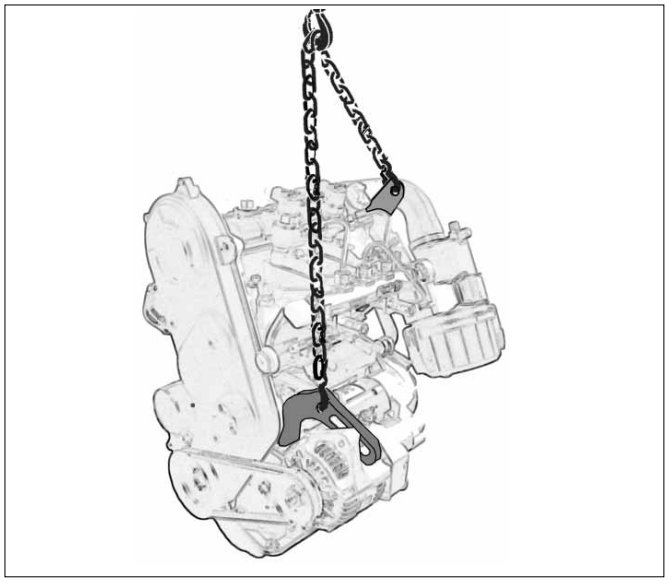

- Attach the engine to a suitable lifting device (lifting beam).
- Hook the lifting device in the engine lifting points, as shown in the figure.
- Before lifting, make sure the weight is correctly balanced by checking its barycentre.

Important

The bracket of the lifting points have been designed to lift the engine only. They are not intended nor approved to lift additional weights.
Do not use different methods to lift the engine than those described herein. In case different methods are used, no warranty shall be granted for any consequential damage.

https://truckmanualshub.com/

ENGINE STORAGE

- **When the engines are not for more than 6 months, they have to be protected performing the operations described in the following pages.**

- If the engine is not to be used for extensive periods, check the storage area conditions and the type of packaging and make sure that these are suitable for correct storage.
  If necessary, cover the engine with a proper protective sheet.
- Avoid storing the engine in direct contact with the ground, in environments that are humid and exposed to bad weather, near high voltage electric lines, etc.

Important

If, after the first 6 months, the engine is still not used, it is necessary to carry out a further measure to extend the protection period (see "Protective treatment").

PROTECTIVE TREATMENT

1 - Pour in the engine housing AGIP RUSTIA C protective oil up to the maximum level.
2 - Fill up with fuel containing 10% AGIP RUSTIA NT.
3 - Make sure that the coolant is up to the maximum level.
4 - Start the engine and keep it idle at minimum speed for some minutes.
5 - Bring the engine to ¾ of the maximum speed for 5÷10 minutes.
6 - Turn off the engine.
7 - Empty out completely the fuel tank.
8 - Spray SAE 10W on the exhaust and intake manifolds.
9 - Seal the exhaust and intake ducts to prevent foreign bodies from entering.
10 - Thoroughly clean all external parts of the engine using suitable products.
11 - Treat non-painted parts with protective products (AGIP RUSTIA NT).
12 - Loosen the alternator/fan belt.
13 - Cover the engine with a proper protective sheet.

Caution - Warning

In countries in which AGIP products are not available, find an equivalent product (with specifications: MIL-L-21260C).

Important

Maximum every 24 months of inactivity, the engine must be started up by repeating all "Engine Storage" operations.

PREPARING THE ENGINE FOR OPERATION AFTER PROTECTIVE TREATMENT

After the storage period and before starting up the engine and preparing it for operation, you need to perform certain operations to ensure maximal efficiency conditions.

1 - Remove the protective sheet.
2 - Remove any sealing devices from the exhaust and intake ducts.
3 - Use a cloth soaked in degreasing product to remove the protective treatment from the external parts.
5 - Inject lubricating oil (no more than 2 cm3) into the intake ducts.
6 - Adjust the alternator/fan belt tension.
7 - Turn the engine manually to check the correct movement and smoothness of the mechanical parts.
8 - Refill the tank with fresh fuel.
9 - Make sure that the oil and the coolant are up to the maximum level.
10 - Start the engine and after some minutes bring it to ¾ of the maximum speed for 5-10 minutes.
11 - Turn off the engine.
12 - Remove the oil drain plug (see "Oil replacement") and discharge the AGIP RUSTIA NT protective oil while the engine is hot.
13 - Pour new oil (see "Table of lubricants") up to the maximum level.
14 - Replace the filters (air, oil, fuel) with original spare parts.
15 - Empty the cooling circuit completely and pour in the new coolant up to the maximum level.

Caution - Warning

Over time, a number of engine components and lubricants lose their properties, so it is important considering whether they need replacing, also based on age (see Replacement table).

Important

Maximum every 24 months of inactivity, the engine must be started up by repeating all "Engine Storage" operations.

https://truckmanualshub.com/

RECOMMENDATIONS FOR DISASSEMBLY

Important

To locate specific topics, the reader should refer to the index.

- **Before any intervention, the operator should lay out all equipment and tools in such a way as to enable him to carry out operations correctly and safely.**
- **Before proceeding with operations, make sure that appropriate safety conditions are in place, in order to safeguard the operator and any persons involved.**
- **In order to operate safely and easily, we recommend positioning the engine on a rotating stand for engine overhauling.**

Caution - Warning

When installing the LDW 442 CRS engines, always bear in mind that any variation to the functional systems may involve serious failures to the engine.
Any improvement must be verified at Lombardini's testing laboratories before application of the engine.
In case the approval to a modification is not granted, Lombardini shall not be deemed responsible for any consequential failures or damages to the engine.

1

ENGINE WIRING HARNESS

Unscrew the 4 screws and remove the acoustic insulation panel.

2

Disconnect the coolant temperature sensor connector.

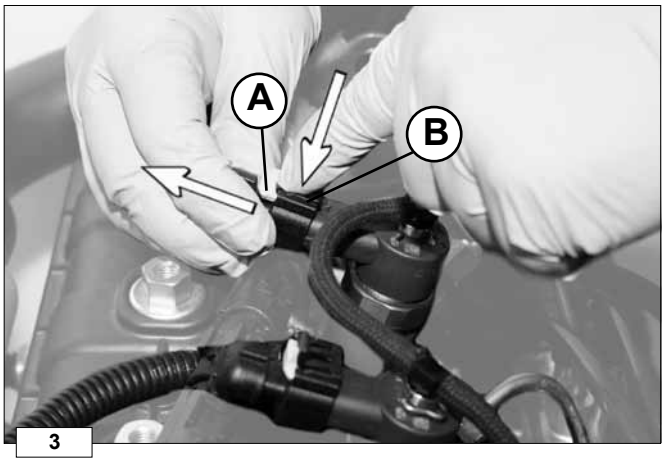

3

Release the safety lock **A** press on tab **B** and simultaneously disconnect the connector from the electronic injector.

https://truckmanualshub.com/

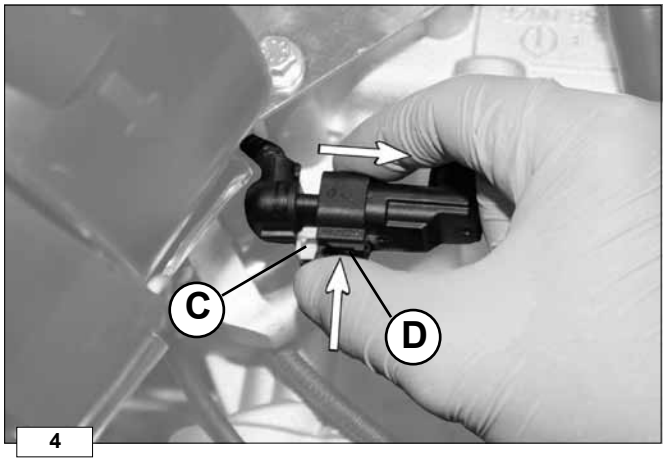

4

Release the safety lock **C** press on tab **D** and simultaneously disconnect the connector from the phase sensor.

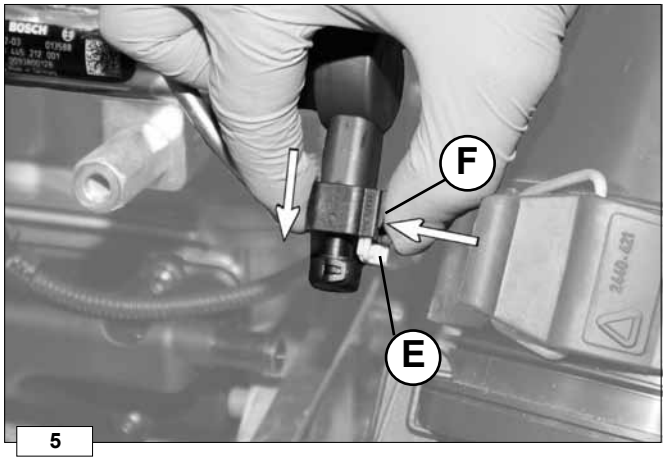

5

Release the safety lock **E** press on tab **F** and simultaneously disconnect the connector from the pressure regulator.

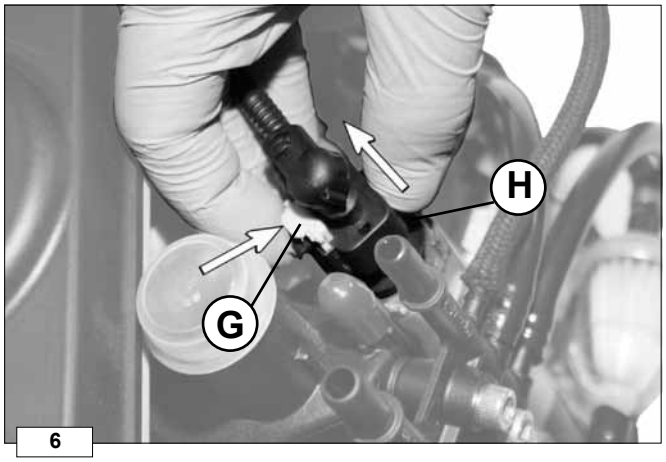

6

Release the safety lock **G** press on tab **H** and simultaneously disconnect the connector from the pressure sensor.

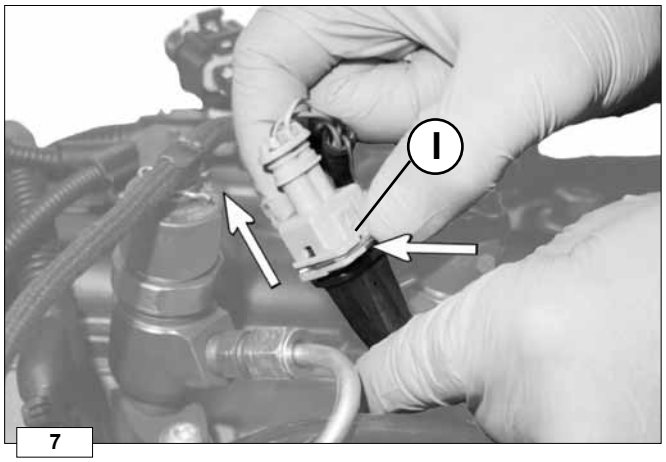

7

Bring the speed sensor connector to an accessible position and then disconnect the connector from the speed sensor by pressing on lock spring **I**.

https://truckmanualshub.com/

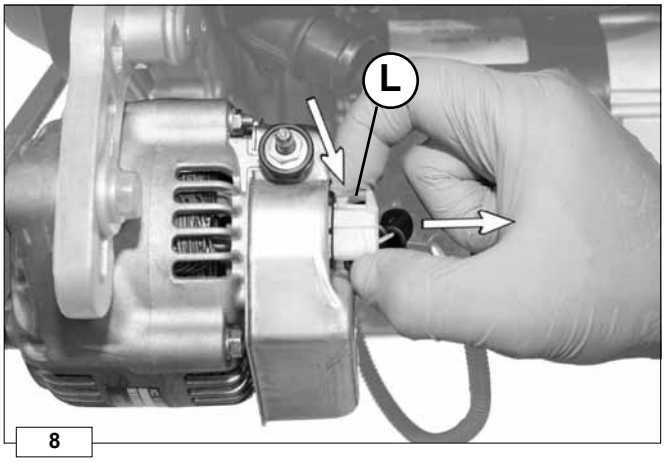

8

By pressing on lock spring **L** disconnect the alternator connector.

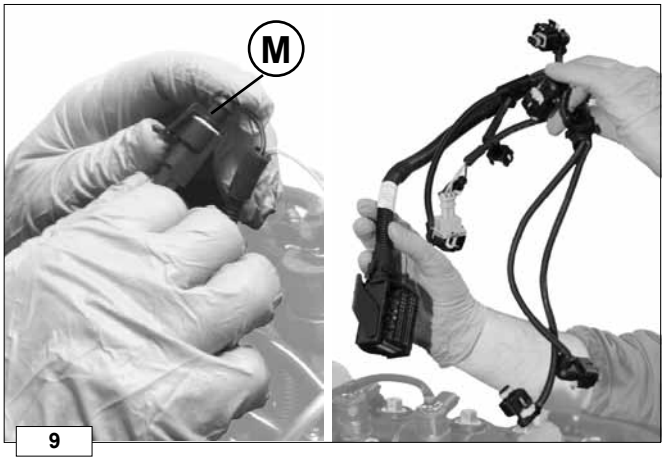

9

Disconnect the alternator control connector **M** from the service wiring harness and then remove the engine wiring harness.

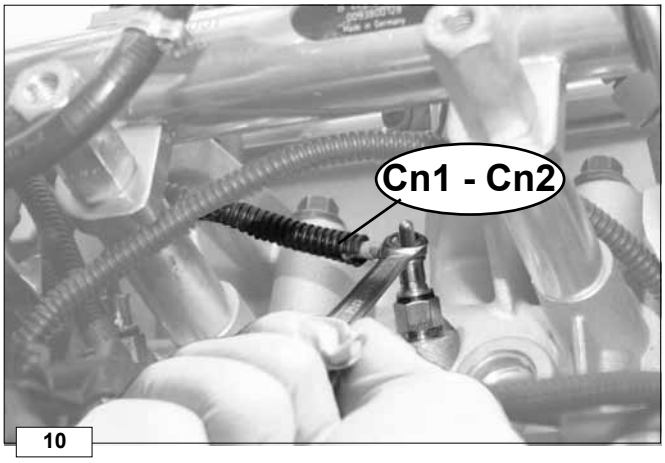

10

SERVICE WIRING HARNESS

Unscrew the fastening nuts and disconnect the supply cable of glow plugs **Cn1** and **Cn2**

11

Disconnect the connector from the oil pressure sensor.

https://truckmanualshub.com/

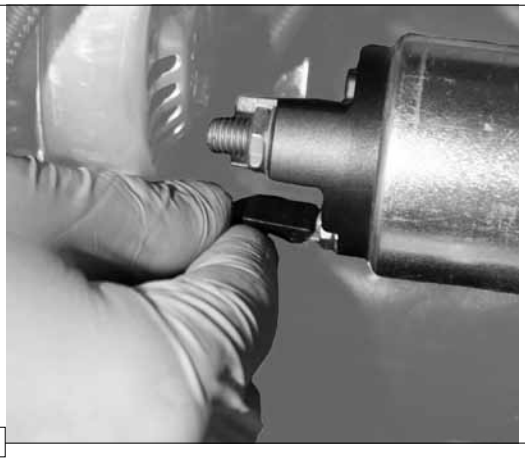
12

Disconnect the connector on the starter motor.

13

Remove the service wiring harness.

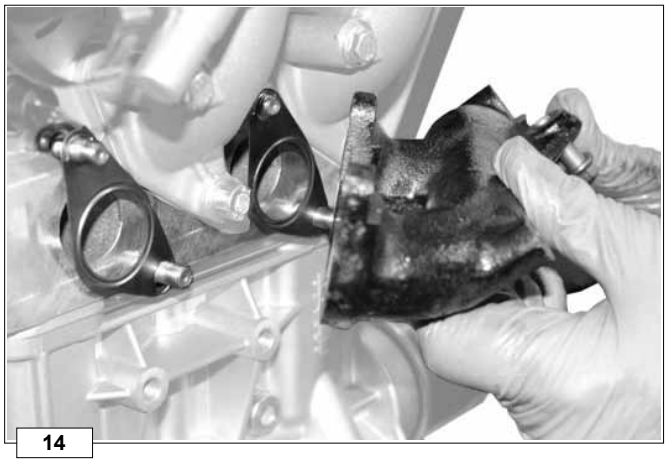
14

EXHAUST MANIFOLD

1. Unscrew the four fastening nuts and remove the manifold.

2. Remove the gaskets.

3. Close the openings and ducts to prevent foreign bodies from entering.

Important

Replace the self-locking nuts and the metal gaskets between the manifold and the cylinder head every time they are disassembled.

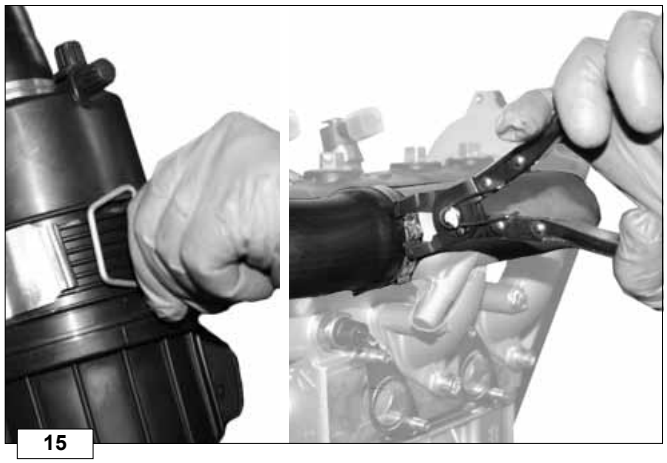
15

INTAKE SYSTEM AND DUCTS

1. Release the rubber clamp that fixes the air filter to the support.

2. Use the special pliers to open the clamp of the air filter/inlet manifold connection duct.

https://truckmanualshub.com/

16 17

3. Disconnect the filter from the duct.

4. Use the special pliers to open the clamp and disconnect the vent duct from the oil vapours decanting device.

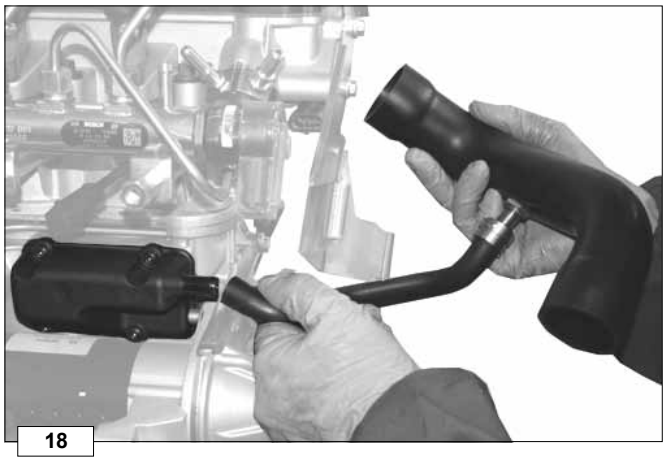
18

5. Simultaneously remove the intake duct and the oil vapours vent duct.

19

6. Remove the fastening screws and disassemble the air filter support bracket.

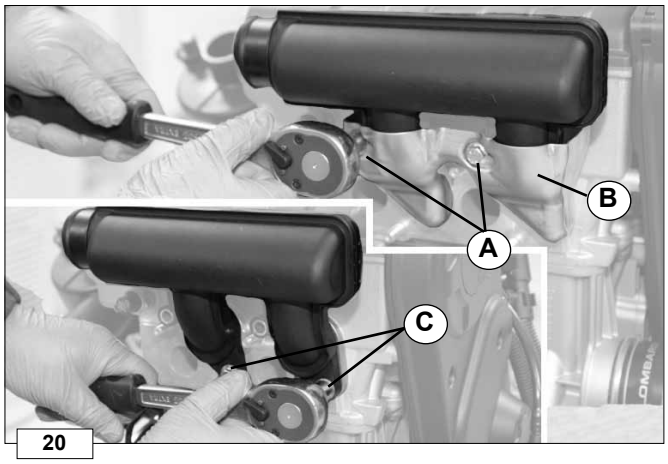

20

INLET MANIFOLD

1. Unscrew the two fastening screws **A** of the heat protection **B** and then remove it.

2. Unscrew the two fastening screws **C** and remove the manifold.

3. Remove the gaskets.

4. Close the openings and ducts to prevent foreign bodies from entering.

https://truckmanualshub.com/

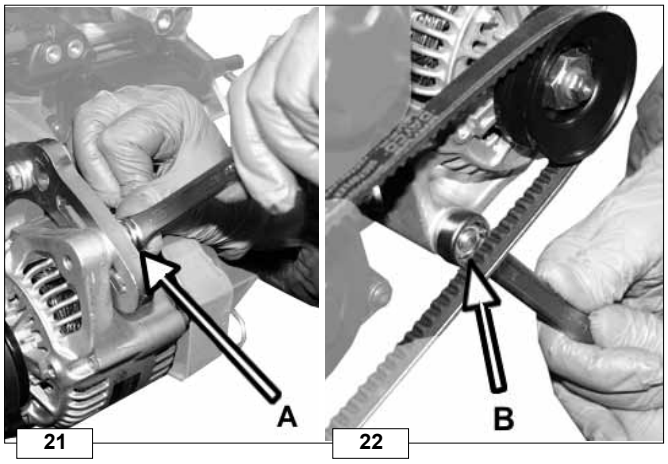

21 22

ALTERNATOR AND DRIVE BELT

1. Unscrew and remove the alternator fastening screw **A** and nut **B**.
2. Manually push the alternator upwards to loosen the belt.

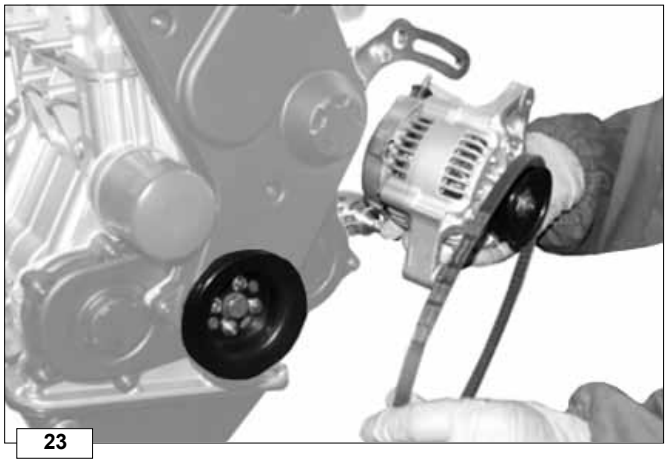
23

3. Release the belt from the pulleys and remove the alternator.

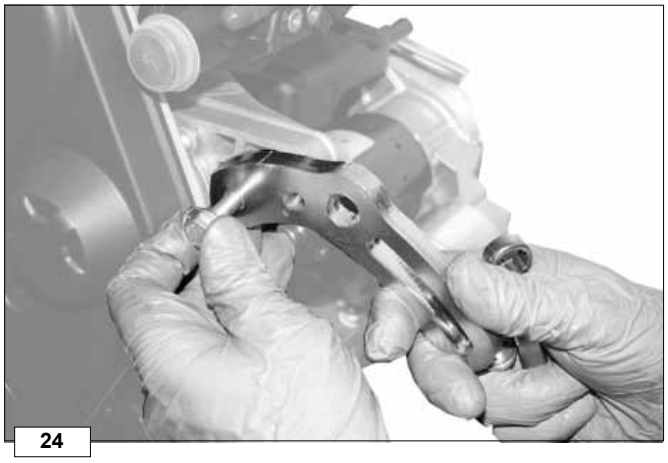
24

4. Unscrew the fastening screws and remove the alternator support bracket.

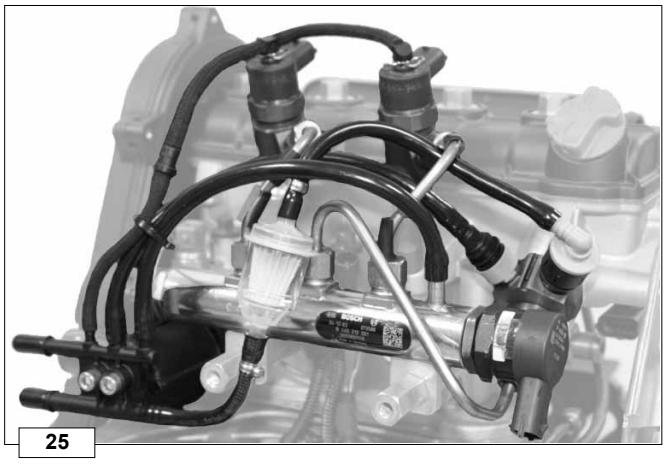
25

FUEL SUPPLY HOSES - Disassembly

https://truckmanualshub.com/

26

INJECTOR RETURN LINE

Push the split pin by its closed side against the return line fitting.

27

Keep the split pin in this position and disconnect the fittings from the injectors by pulling them upwards. Pay attention to the O-rings.

Caution - Warning

After removing the fittings, the split pin must automatically return to the normal position.
If this does not happen, replace the split pin.

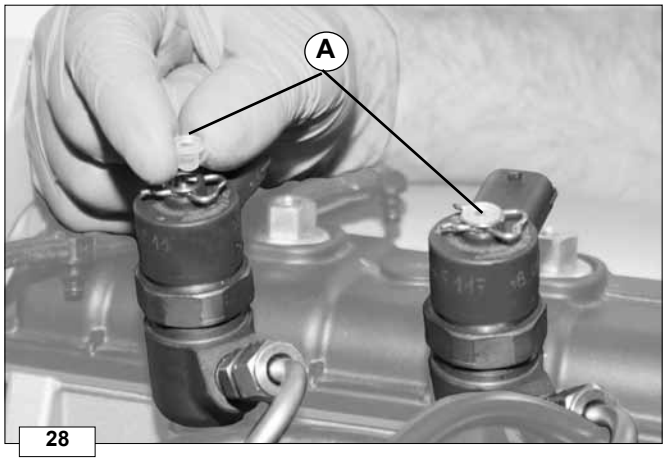

28

Important

Seal all the openings of the return line and injectors, to keep dirt or foreign bodies out of the engine.

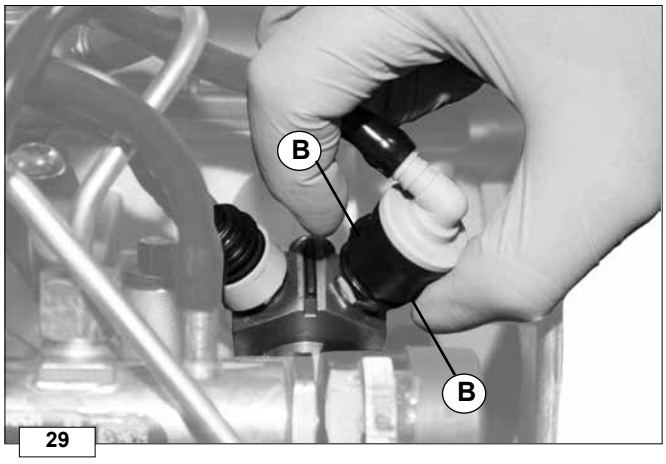

29

INJECTION PUMP SUPPLY HOSES

Press on the safety pawls **B** to disconnect the Diesel fuel delivery line.

https://truckmanualshub.com/

30

Disconnect the injection pump return line.

31

Use the special plugs **C** to seal the fuel inlet and outlet holes.

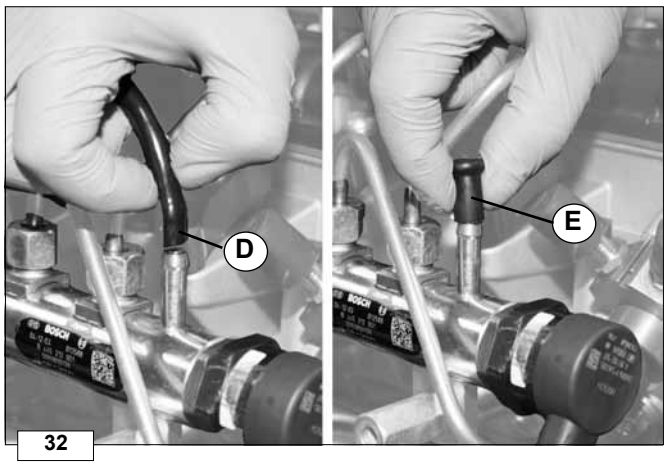

32

OVERPRESSURE RETURN LINE

Disconnect the hose **D** from the Rail and use a special plug **E** to plug the union.

33

FUEL DISTRIBUTOR

Unscrew the fastening screws and remove the distributor with hoses and safety filter.

https://truckmanualshub.com/

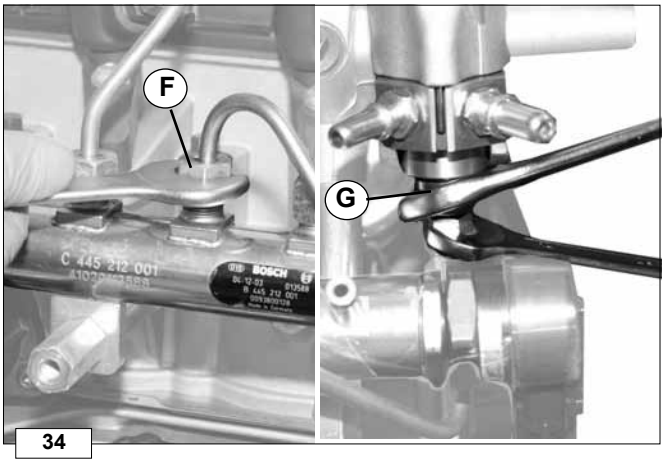

34

HIGH-PRESSURE LINE BETWEEN INJECTION PUMP AND RAIL

Unscrew the high-pressure line union **F** on the Rail.

Caution - Warning

When unscrewing the high-pressure line union that connects the pump to the rail, hold the union G on the high-pressure pump with a wrench.

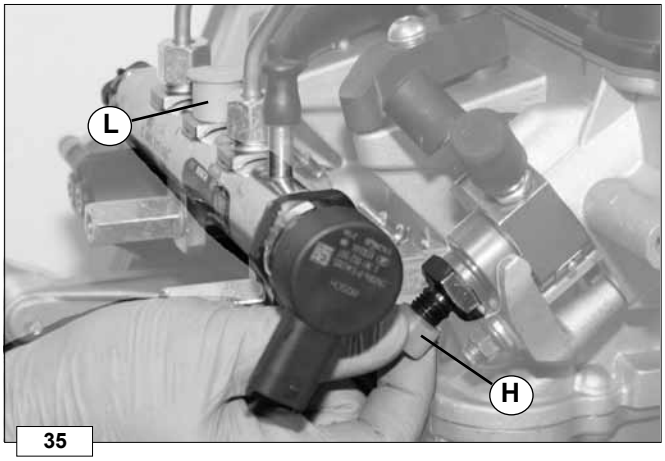

35

Important

After disassembling the high-pressure line, use the special plugs to close the fuel passage holes on the high-pressure pump H and on the Rail L.

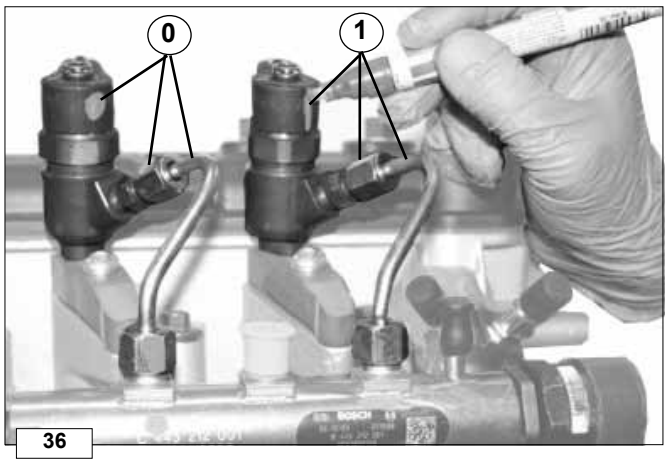

36

ELECTRONIC INJECTORS

Important

Before removing the injectors and/or the delivery hoses, mark them (0 and 1, see photo) not to reverse the original position of the cylinders during the reassembly phase.
If the position of the electronic injectors is changed, the ECU will not detect the expected IMA codes. This will result in poor engine performances (see page 46).

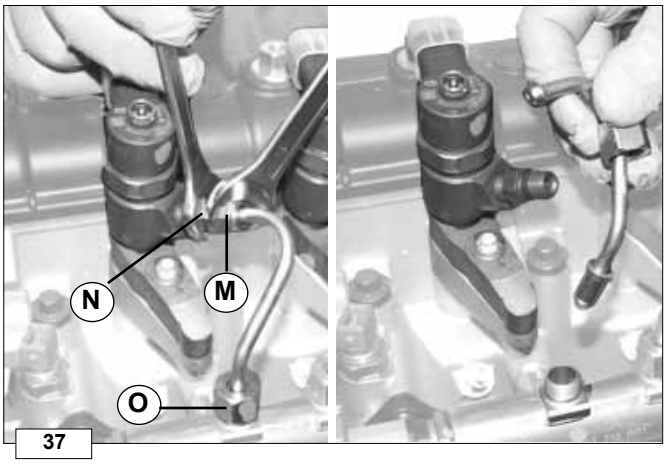

37

HIGH-PRESSURE LINES OF THE INJECTORS

Caution - Warning

Unscrew the union of the high-pressure line M, by holding the injector union N with a wrench, then unscrew union O.

Caution - Warning

Carry out the high-pressure line disassembly with care to avoid damaging the cones and the sealing olives.

https://truckmanualshub.com/

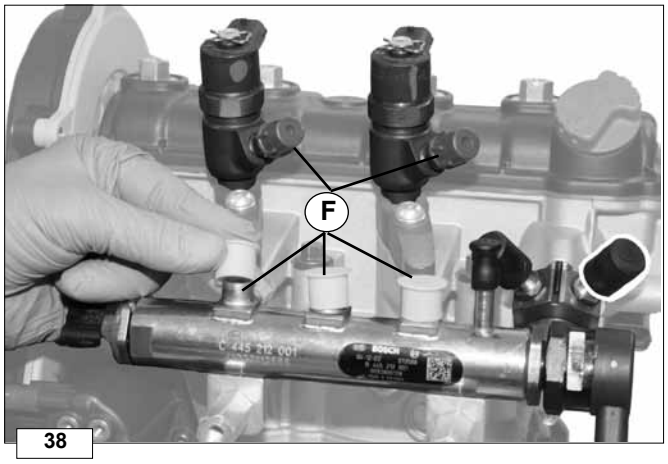

38

Caution - Warning

Seal the Rail outlets, injector union and high-pressure line inlets.

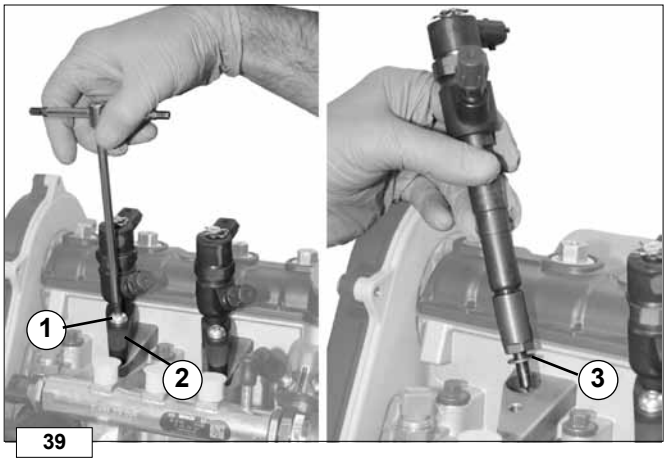

39

Extracting the electronic injectors from the cylinder head

1- Unscrew the screw **1** and remove the bracket **2** that fixes the electronic injector to the cylinder head.
2- Manually rotate the electronic injector in its seat to extract it. Make sure not to leave the copper gasket **3** in its seat on the cylinder head.

Important - Warning

The protrusion of the nozzles from the cylinder head surface depends on the seal 3. Use seals of different thickness to obtain a different protrusion.
Match each seal with the corresponding injector.
Never use improper tools to extract the electronic injector from the cylinder head.

40

RAIL

Unscrew the two fixing columns of the acoustic insulation panel that fix the rail to the cylinder head.

41

Disassemble the Rail and remove the columns that fix it to the cylinder head.

https://truckmanualshub.com/

42

GLOW PLUGS

Use a box wrench to loosen the glow plugs, to avoid damaging the hexagon.

43

Remove the glow plugs.

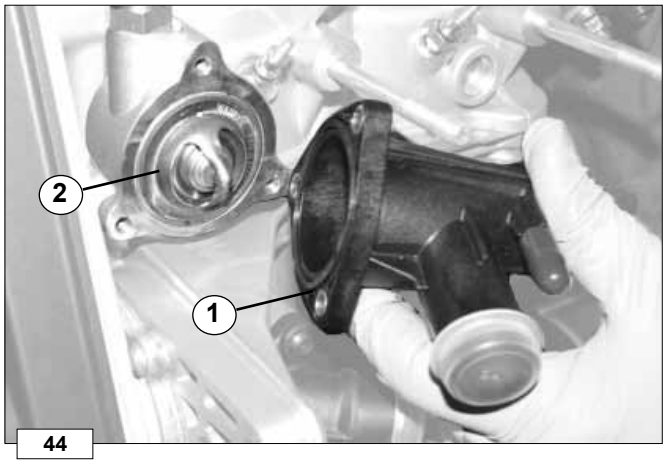

44

COOLANT OUTLET FLANGE AND THERMOSTATIC VALVE

1. Unscrew the three fastening screws and remove the coolant outlet flange **1** (coolant flow from engine to radiator).

2. Remove the thermostatic valve **2**

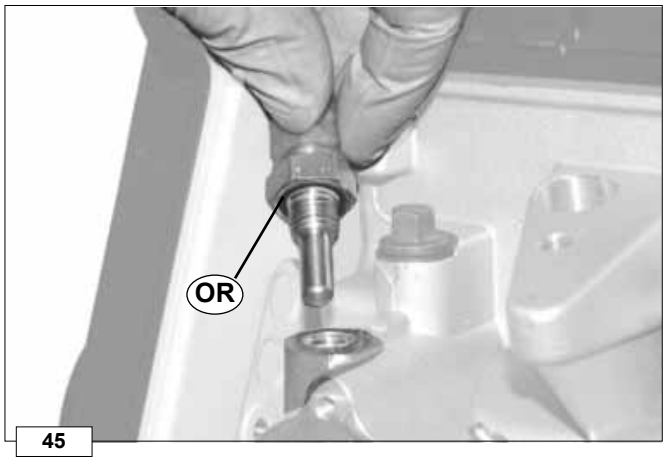

45

WATER TEMPERATURE SENSOR

Disassemble the sensor from its seat in the thermostat case and check the condition of the **O-ring.**

https://truckmanualshub.com/

46

OIL FILTER CARTRIDGE

Use the special tool to disassemble the cartridge.

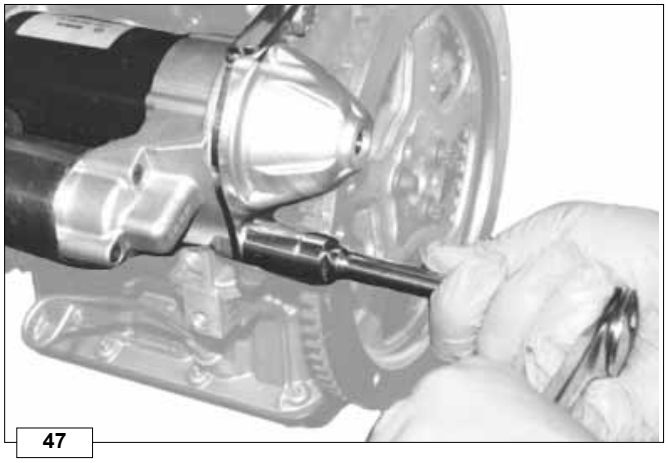
47

STARTER MOTOR

Unscrew the fastening screws and remove the starter motor.

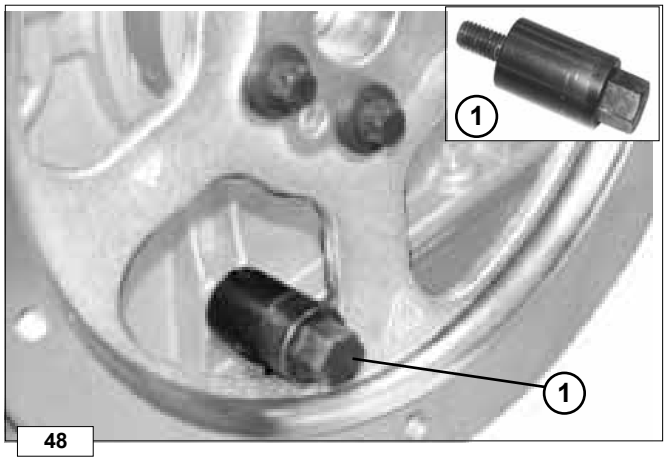

48

ALTERNATOR DRIVE PULLEY

1. Insert the special tool **1** p/n 1460.301 in the threaded hole on the crankcase (flywheel side) to secure the crankshaft against rotation.

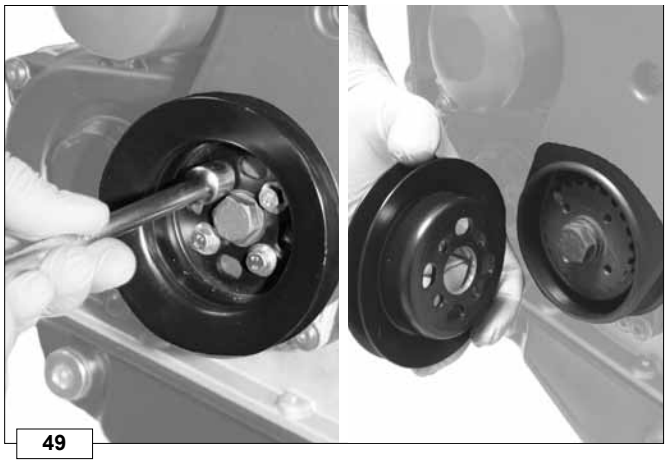
49

2. Unscrew the four fastening screws to remove the pulley.

https://truckmanualshub.com/

50

ROCKER ARM COVER

Unscrew the fastening screws and remove the cover.

Caution - Warning

During the disassembly of the screws, pay attention not to damage the acoustic insulating rubber seal between the fastening screw and the cover.

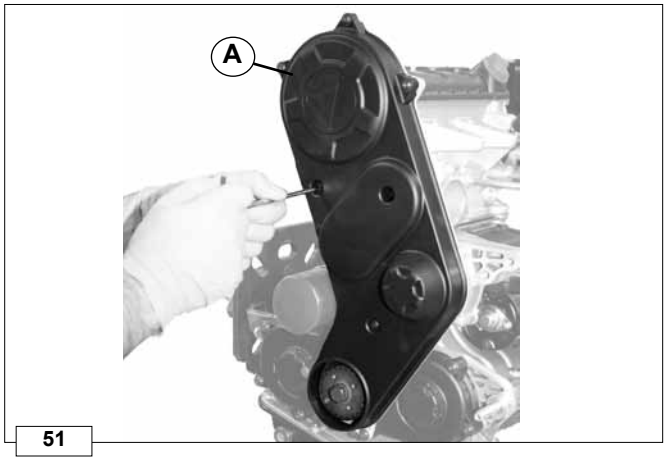

51

TIMING SYSTEM

1. Unscrew the fastening screws and remove the external timing belt guard **A.**

Key to components**:**

1- Camshaft toothed pulley
2- Water pump
3- Tightening pulley
4- Timing system drive pulley

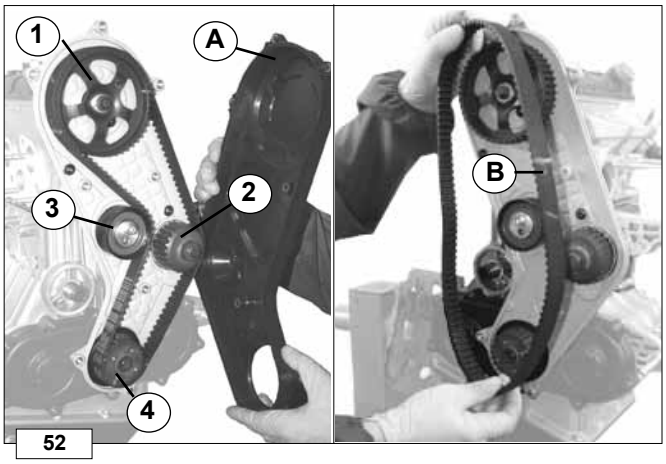

52

2. Unscrew the fastening screw of the tightening pulley **3** and manually rotate it to loosen the belt.
3. Remove the timing system drive belt **B**.

Important

Every time the belt is disassembled it must be replaced even if it has not reached the prescribed time for replacement.

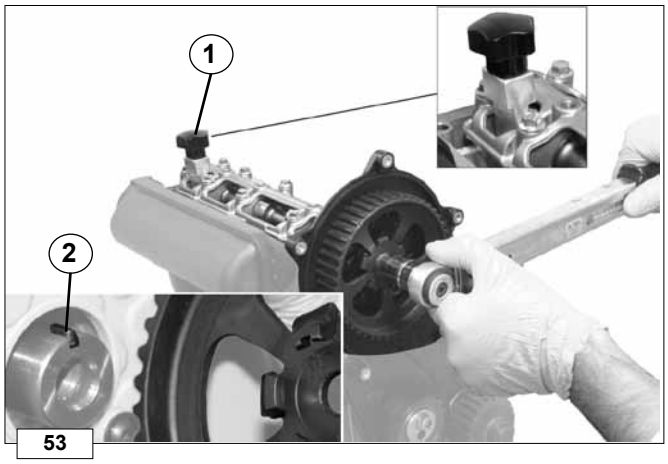

53

4. Fit the special tool **1** p/n 1460.300 to lock the camshaft timing pulley.
5. Unscrew the fastening bolt.

Caution - Warning

When removing the pulley, pay attention not to drop the key 2.

6. Remove the timing pulley on the camshaft.

https://truckmanualshub.com/

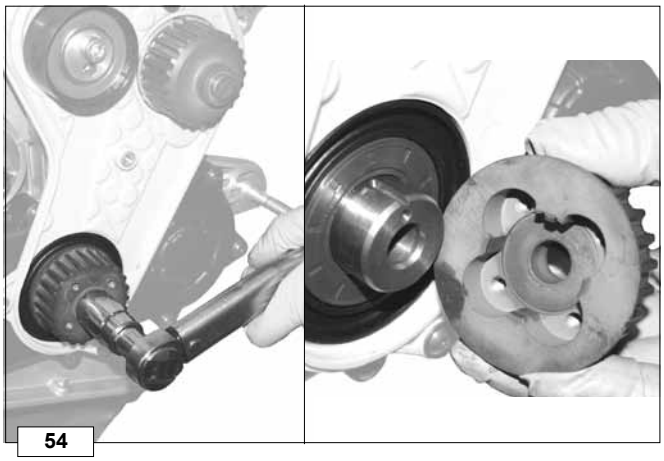
54

7. Unscrew the fastening bolt of the timing system drive pulley on the crankshaft.

8. Remove the timing system drive pulley on the crankshaft.

55

TIGHTENING PULLEY

Unscrew and disassemble the tightening pulley.

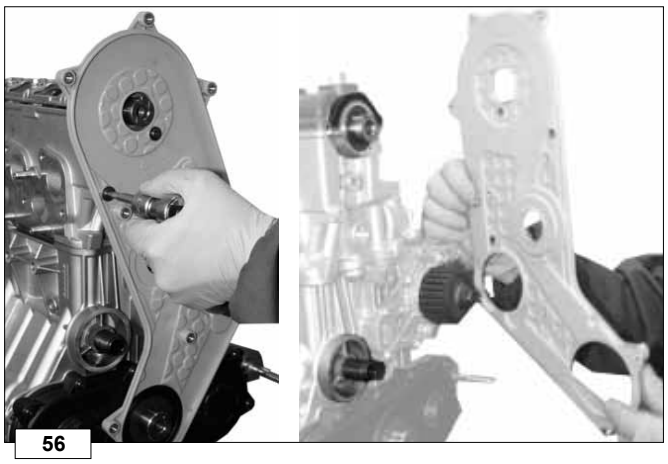
56

9. Unscrew the 3 fastening screws of the internal timing belt guard.

10. Disassemble the internal timing belt guard.

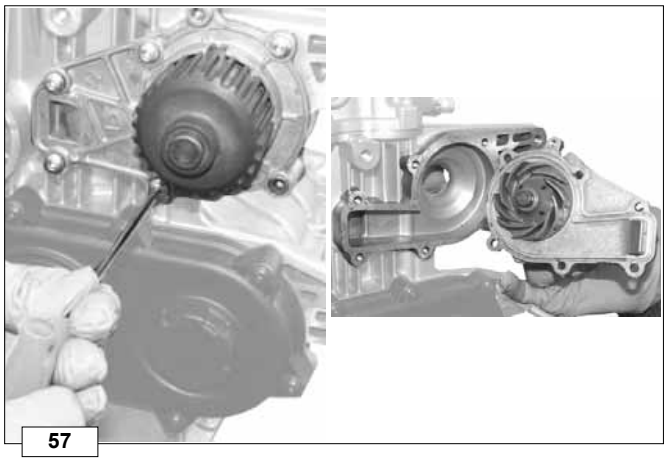
57

WATER PUMP

Unscrew the fastening screws and remove the water pump.

Important

The water pump cannot be repaired. In case of failure it must be replaced with a new one.

https://truckmanualshub.com/

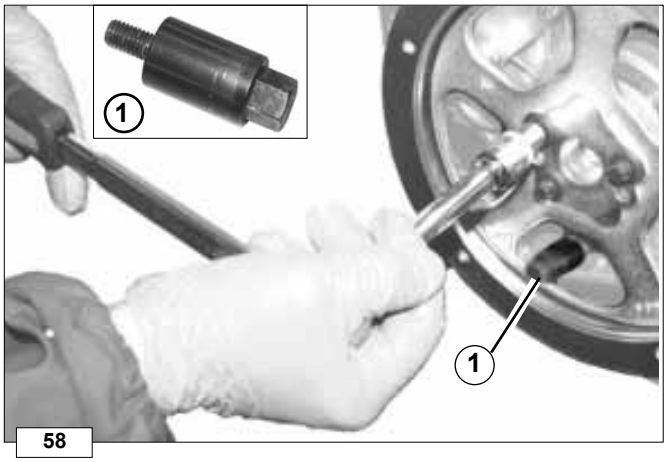

58

FLYWHEEL

1- Insert the special tool **1** p/n 1460.301 in the threaded hole on the crankcase to secure the crankshaft against rotation.

2- Unscrew the three fastening screws.

3- Remove the flywheel-locking tool **1** (1460.301).

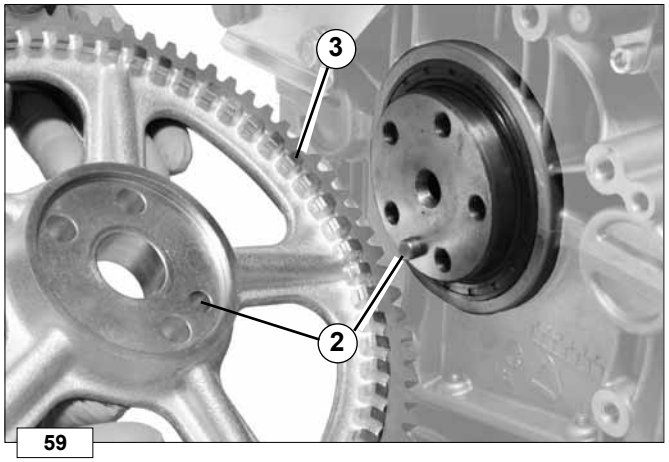

59

Caution - Warning

During the disassembly phase, pay particular attention to the cylindrical reference pin 2 between the flywheel and the crankshaft.

4- Disassemble the flywheel paying attention not to damage the teeth of the phonic wheel **3**.

60

SPEED SENSOR

Unscrew the two fastening screws and remove the speed sensor.

Important

After disassembling the sensor, protect it against shocks, humidity and any sources of high temperature.

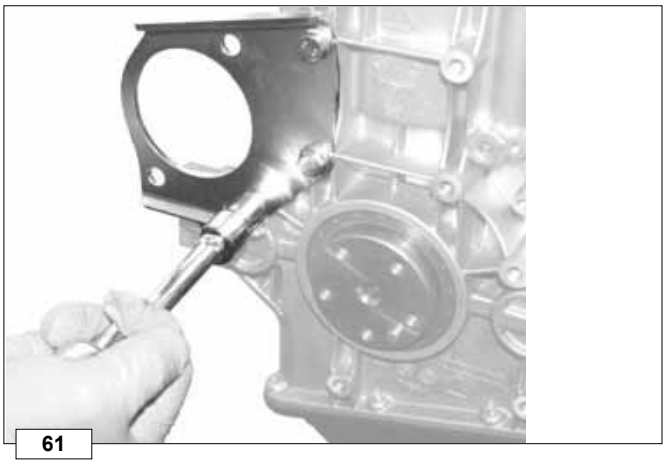
61

STARTER MOTOR SUPPORT PLATE

Unscrew the three fastening screws to remove the plate.

https://truckmanualshub.com/

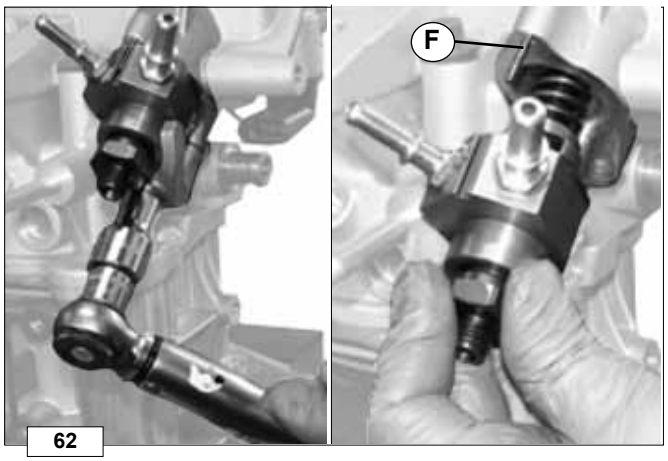

62

HIGH-PRESSURE PUMP

Unscrew the nut and remove the fixing bracket of the high-pressure pump.

Caution - Warning

Pull out the pump, paying attention not to drop the roller tappet pad.

Important

The roller tappet pad B (fig.63) is available in different thicknesses, since it determines the injection pump pre-stroke.
When replacing the injection pump, the pad thickness has to be determined again.
To determine the correct thickness of pad B (fig.63) refer to page 98.

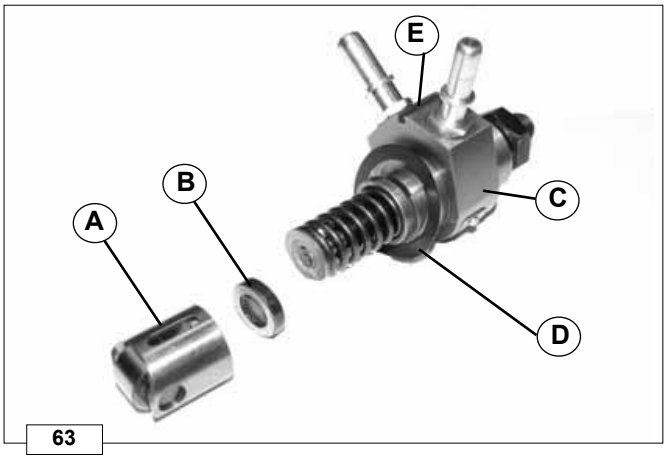

63

High-pressure pump - Components

A Roller tappet
B Roller tappet pad
C High-pressure pump
D Seal
E Locating pin seat
F Locating peg

To disassemble the roller tappet refer to page 72.

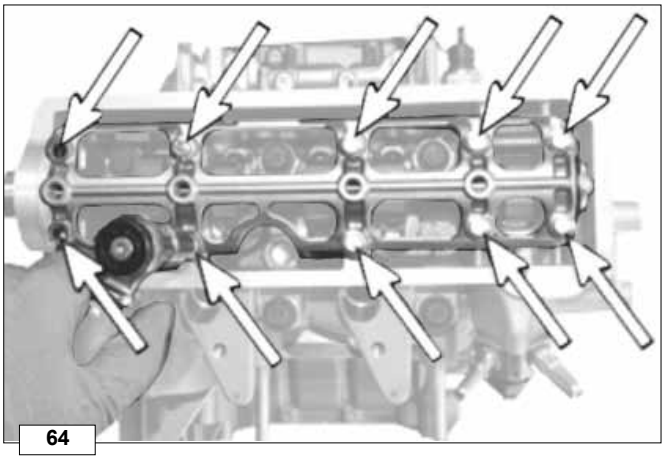
64

CAMSHAFT COVER

Loosen the fastening screws shown by the arrows and disassemble the camshaft cover.

Important

In case of breakage or deformation of the camshaft cover, replace the whole cylinder head.

https://truckmanualshub.com/

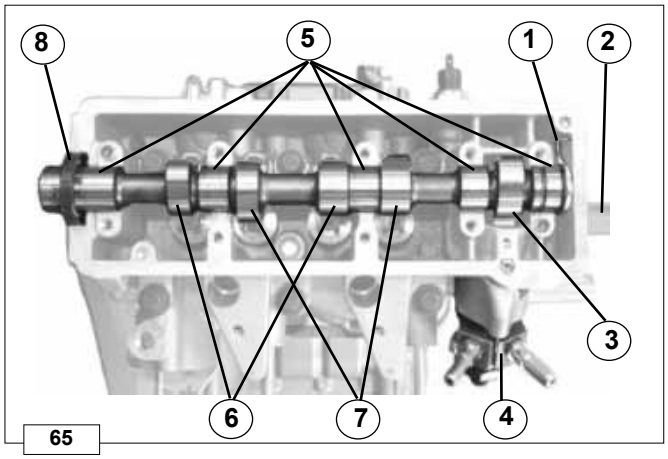

65

CAMSHAFT

Key to components:

1 Phase sensor reference plate
2 Phase sensor
3 High-pressure pump cam
4 High-pressure pump
5 Camshaft bearings
6 Intake cam
7 Exhaust cam
8 Seal ring

66

Remove the key and the oil seal ring.

67

Remove the camshaft, paying attention not to damage the phase sensor reference plate.

Important

If the phase sensor reference plate 1 (fig.65) is bent or incorrectly assembled, the engine may have starting problems and/or irregular performances.

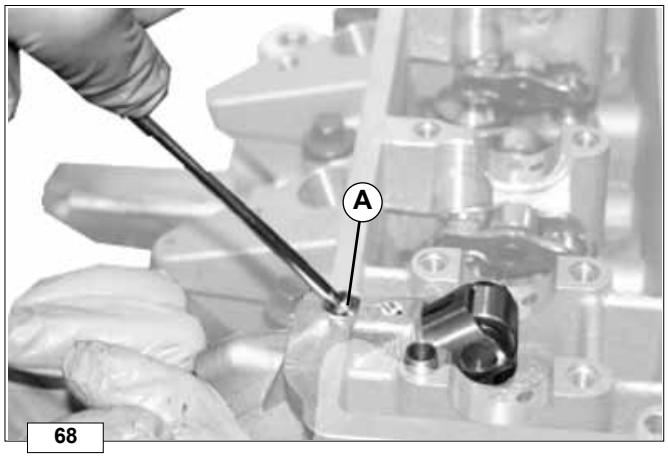

68

Unscrew the recessed hex-head screw **A** to disassemble the roller tappet.

https://truckmanualshub.com/

69

ROCKER ARMS AND HYDRAULIC TAPPETS

Disassemble the rocker arm and the hydraulic tappet by pulling the rocker arm upwards.
The hydraulic tappet comes off together with the rocker arm, since it is fixed to it by means of a clamp **2**.
In case the tappet does not come off with the rocker arm, extract it from its seat using pliers.

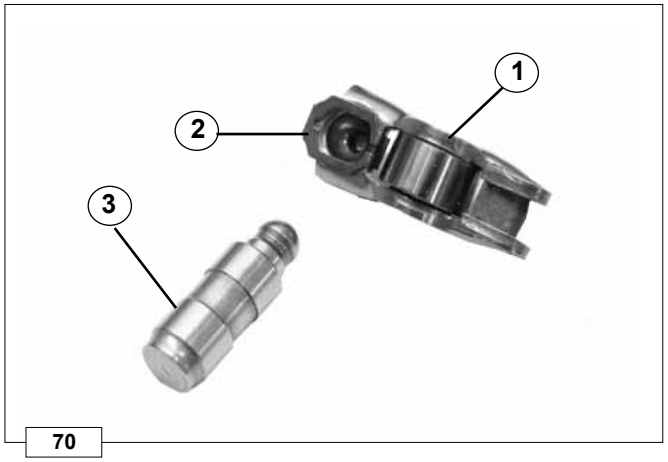

70

Key to components:

1. Rocker arm
2. Tappet fastening clamp
3. Hydraulic tappet

➲ For further specifications on the hydraulic tappet, refer to page 95.

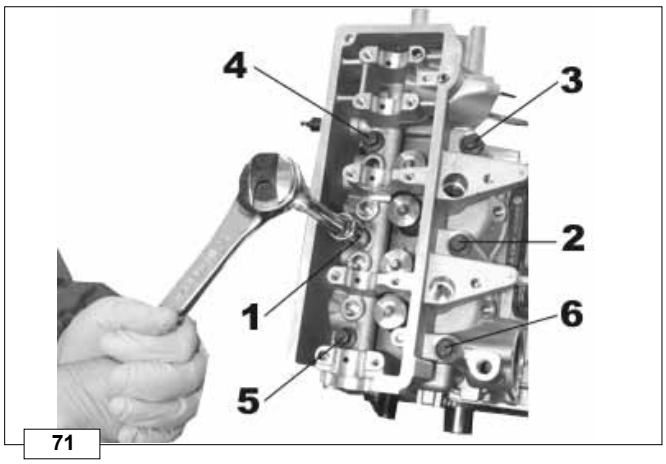

71

CYLINDER HEAD

Important
Do not disassemble the head while the engine is hot, to avoid the risk of deformations.

Unscrew the fastening bolts on the cylinder head following the order shown in the photo.

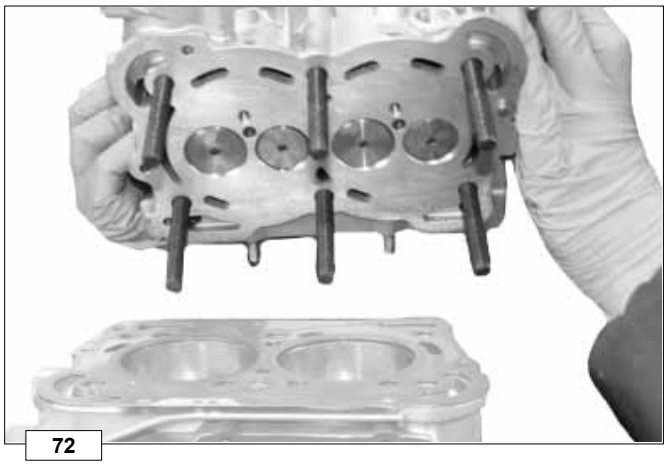

72

Remove the cylinder head and place it in a suitable container to wash it thoroughly.

Important
The cylinder head fastening bolts must be replaced at each disassembly.

https://truckmanualshub.com/

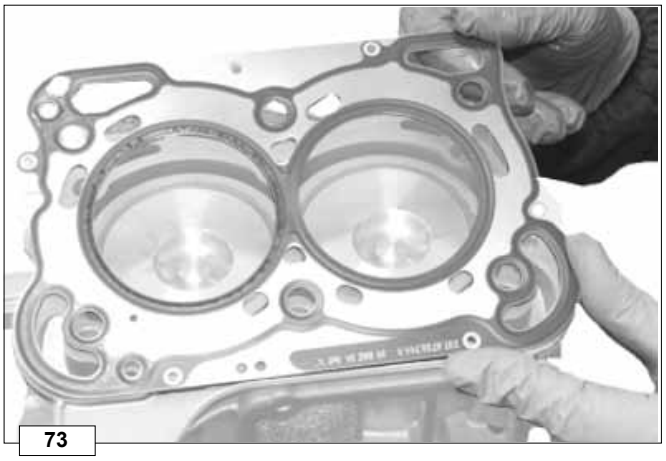
73

CYLINDER HEAD GASKET

Remove the gasket.

Important

The head gasket must be replaced every time it is disassembled.

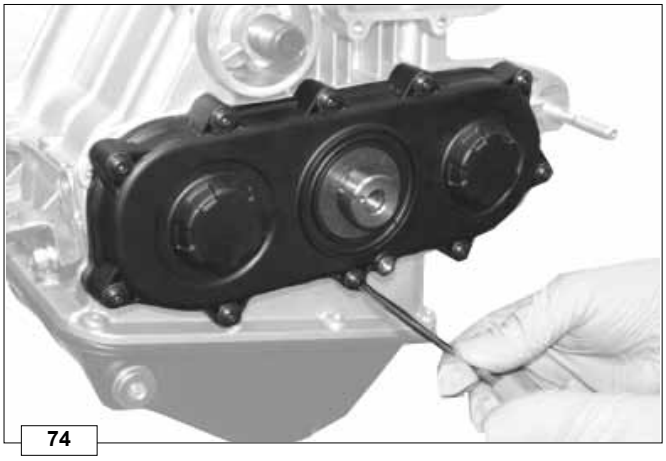
74

GEAR COVER

Unscrew the fastening screws and disassemble the cover, paying particular attention not to damage the oil seal ring **5** , shown in fig.75.

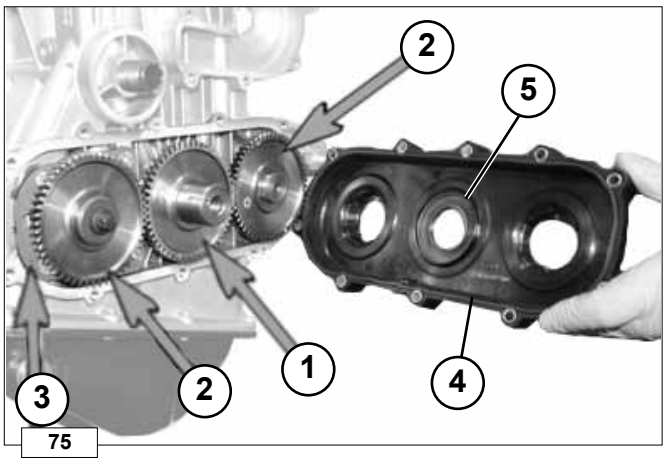

75

Key to components:

1. Balance shaft gear drive gear
2. Balance shaft gear
3. Oil pump
4. O-ring
5. Oil seal ring

Important

Check the integrity of the O-ring (4) and replace it if necessary.

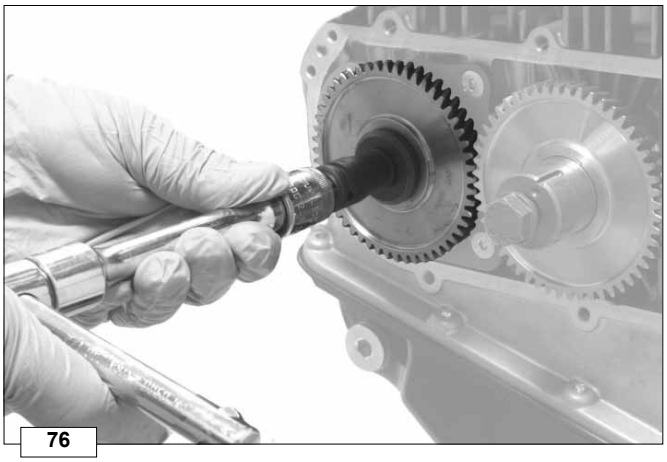
76

OIL PUMP GEAR

Unscrew the torx screw and pull the gear out.

https://truckmanualshub.com/

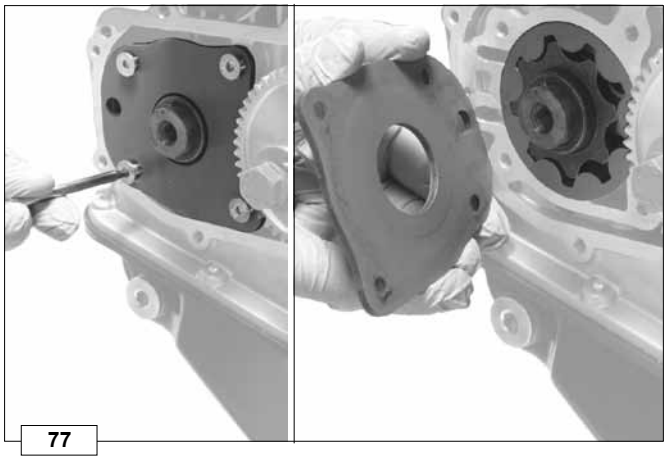
77

OIL PUMP

Unscrew the four fastening screws and remove the oil pump plate.

The trochoid oil pump is driven by the balance shaft.
The pump casing is partly integrated in the engine block, and partly in the crankcase.

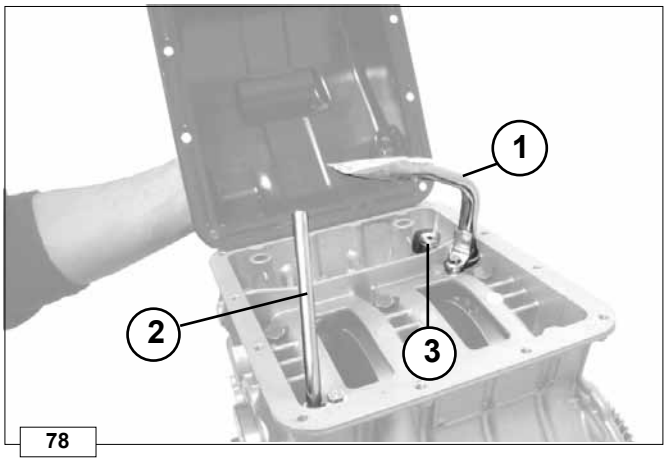

78

OIL SUMP

Unscrew the fastening screws and remove the oil sump.

Components:

1 Oil suction pipe
2 Oil sump return line from vent system
3 Oil pressure regulating valve

79

CONNECTING ROD BIG END CAPS

1. Rotate the crankshaft to bring it to the bottom dead centre.
2. Unscrew the big end cap screws using a torx wrench.

80

3. Disassemble the connecting rod big end caps.

Important
The connecting rod half-bearings are made of special material. Therefore, they must be replaced every time they are removed to avoid seizures.

Important
During the reassembly phase, the two centring pins F on the connecting rod cap must coincide with the special holes F on the big end.

https://truckmanualshub.com/

81

PISTON

Press by hand on the connecting rod big end to pull out the connecting rod - piston assembly.

82

Important

Mark some references on the connecting rods, caps, pistons and gudgeon pins to avoid unintentionally mixing up the components during the reassembly phase, since this could result in engine malfunctioning.

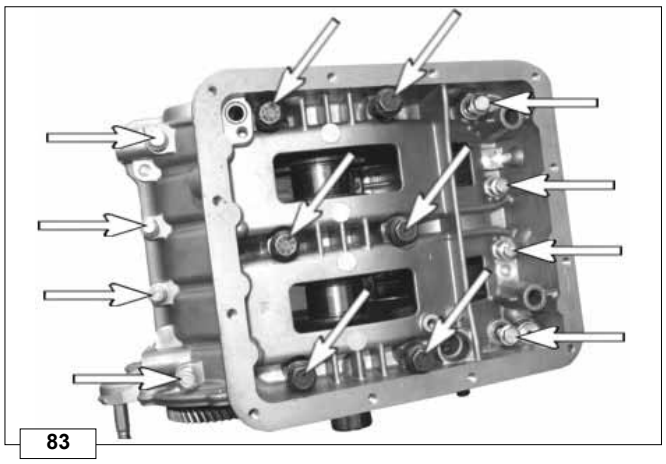

83

CRANKCASE

Remove the screws shown by the arrows to separate the upper and lower crankcase.

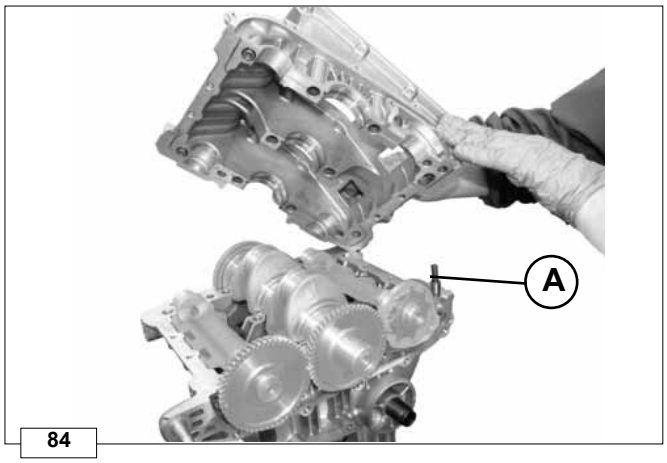

84

Remove the lower crankcase and place it in a suitable container to wash it (see fig.87 a).

Caution - Warning

When disassembling the lower crankcase, pay attention not to damage the crankshaft half-bearings and the components of the oil pressure regulating valve A.

Important

The connecting rod half-bearings are made of special material. Therefore, they must be replaced every time they are removed to avoid seizures.

https://truckmanualshub.com/

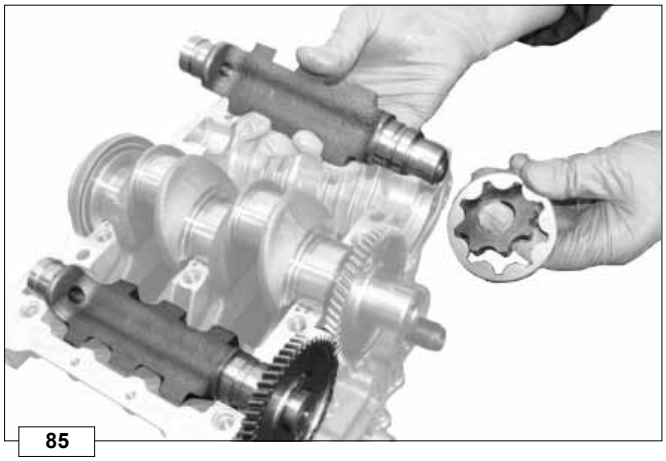

85

BALANCE COUNTERSHAFTS

1. Remove the balance shaft together with the oil pump lobes.

86

2. Remove the second balance shaft with the gear.

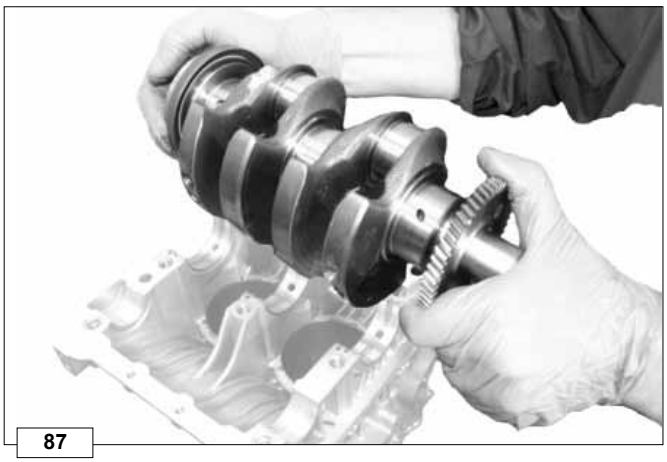

87

CRANKSHAFT

Remove the crankshaft with the gear.

Important

The connecting rod half-bearings are made of special material. Therefore, they must be replaced every time they are removed to avoid seizures.

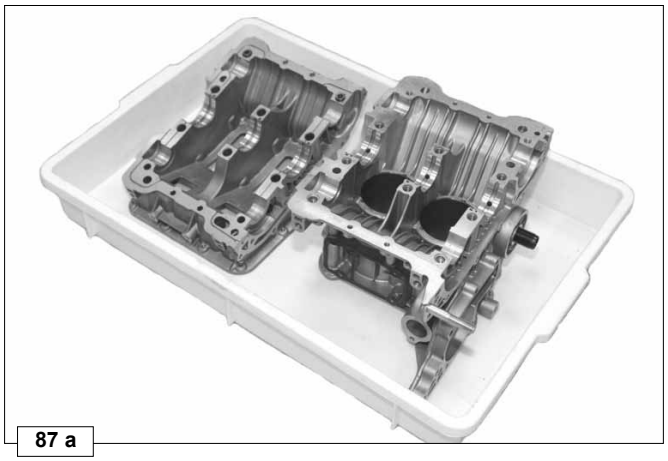

87 a

ENGINE BLOCK

Place the engine blocks in a container suitable for washing.

https://truckmanualshub.com/

https://truckmanualshub.com/

https://truckmanualshub.com/

RECOMMENDATIONS FOR OVERHAULS AND TUNING

- Information is given in a logical order in terms of timing and sequence of operations. The methods have been selected, tested and approved by the manufacturer's technical experts.
- This chapter describes procedures for checking, overhauling and tuning assemblies and/or individual components.

Important

To locate specific topics, the reader should refer to the index.

- Before any intervention, the operator should lay out all equipment and tools in such a way as to enable him to carry out operations correctly and safely.
- The operator must comply with the specific measures described in order to avoid errors that might cause damage to the engine.
- Before carrying out any operation, clean the assemblies and/or components thoroughly and eliminate any deposits or residual material.
- Wash the components with special detergent and do not use steam or hot water.
- Do not use flammable products (petrol, diesel, etc.) to degrease or wash components. Use special products.
- Dry all washed surfaces and components thoroughly with a jet of air or special cloths before reassembling them.
- Apply a layer of lubricant over all surfaces to protect them against oxidation.
- Check all components for intactness, Wear limit, seizure, cracks and/or faults to be sure that the engine is in good working condition.
- Some mechanical parts must be replaced *en bloc*, together with their coupled parts (e.g. valve guide/valve etc.) as specified in the spare parts catalogue.

Shaft seals

- Clean the shaft thoroughly and make sure that it is not damaged or scored or become oval-shaped in the areas of contact with the seals.
- Lubricate the seal lips, and pointing them in the right direction, place them in their seat using a special pad.
- Do not use a hammer directly on the gaskets during assembly, to avoid damaging them.
- Be careful not to damage the gaskets while joining them to the shaft.

O- rings

- Lubricate the seal before introducing it to its seat.
- Avoid «rolling» the gasket during the attachment phase.

OVERHAULING THE CRANK GEARS AND CRANKCASE

Overhauling cylinders and pistons

Before deciding what kind of overhaul needs to be done, it is important to carry out a dimensional check and verify the correspondence of cylinders, pistons, sealing rings, crankshaft and connecting rods.

https://truckmanualshub.com/

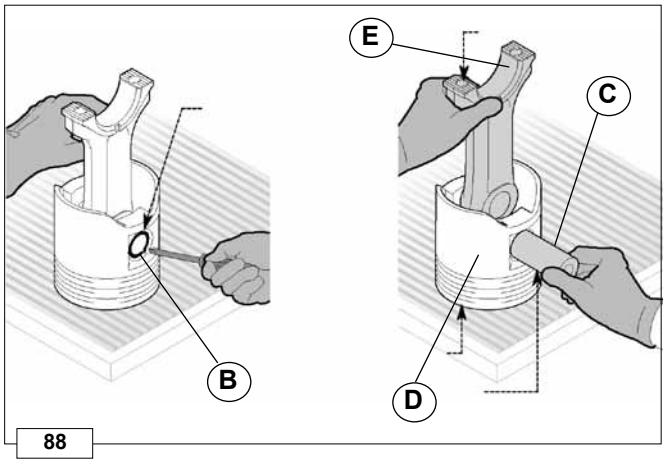

88

PISTON

1. Disassemble the lock ring **B**.
2. Pull out the gudgeon pin **C** to separate the piston **D** from the connecting rod **E**.

Important

Keep each connecting rod coupled with its piston and gudgeon pin.

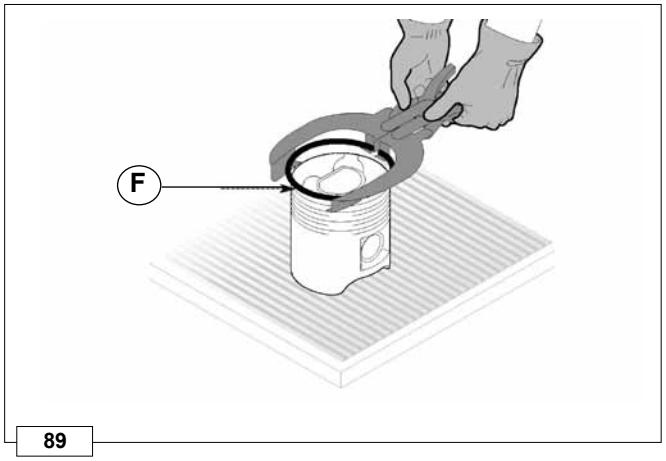

89

3. Disassemble the seal rings **F**.

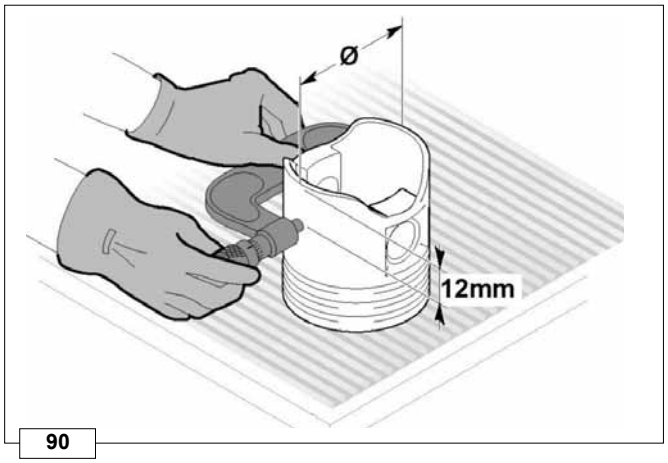

90

Clean the piston thoroughly.
Using a micrometer, measure the piston 12 mm from the skirt base.
Check the table to identify the class of the measured values.
The class letter is engraved on the piston crown.
If clearance between cylinder and piston is greater than 0.05 mm, the piston and seal rings must be replaced.

Important

Before replacing the pistons, check that the weight difference between the two integral preassembled connecting rod/ piston/gudgeon pin assemblies does not exceed 8 g, to prevent weight imbalances.
Protect the contact surfaces with lubricating oil, to prevent them from rusting.

https://truckmanualshub.com/

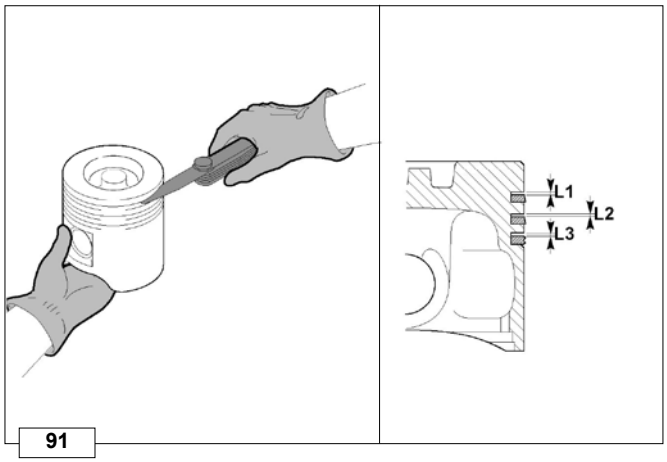

91

Using a thickness feeler gauge, measure the clearance of each seal ring in its seat.
If the clearance does not comply with the values shown in the table, replace the seal rings and piston with original spare parts.

Seal rings/Piston clearance table

Seal rings	Clearance (mm)
1°	L1 = 0,070÷0,105
2°	L2 = 0,050÷0,085
3°	L3 =0,025÷0,070

Important

– Seal rings cannot be replaced separately.
– Protect the contact surfaces with lubricating oil, to prevent them from rusting.

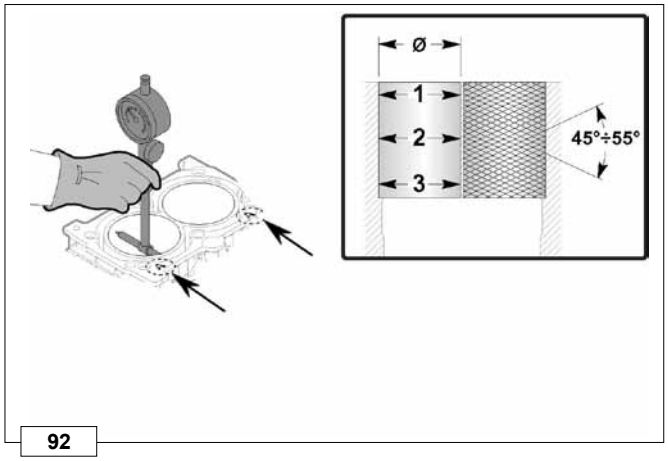

92

CYLINDERS

Place the engine block on the workbench.
Using a dial gauge, measure the diameter at points **1-2-3** (see figure).
Rotate the dial gauge 90° and re-measure.
Check the table to identify the class of the values measured.
The class letter is engraved on the engine block (see figure).
If ovalization or wear is greater than 0.05 mm, the cylinder must be reconditioned.

Important

- The cylinders can be oversized by 0.25 and 0.50 mm, in compliance with the Manufacturer's specifications.
- When reconditioning, make sure that the working angle is 45÷55° and that the average roughness is Ra=0.25÷0.5.
- Do not finish the internal surface of the cylinders using an emery cloth.
- Protect the contact surfaces with lubricating oil, to prevent them from rusting.

Cylinders/Pistons dimension and class table

Dimensional Class	Cylinder Ø (mm)	Piston Ø (mm)	Clearance (mm)
B	68,00÷68,01	67,96÷67,97	0,03÷0,05
C	68,01÷68,02	67,97÷67,98	

This table shows the reference values and their classification (only valid for new engines).

Important

Pistons having a diameter as per their nominal value are supplied as spare parts only for class (B). The oversized ones (0.25 and 0.50 mm) have a reference (Ø 68.25 and Ø 68.50) engraved on the upper section (crown) of the piston.

https://truckmanualshub.com/

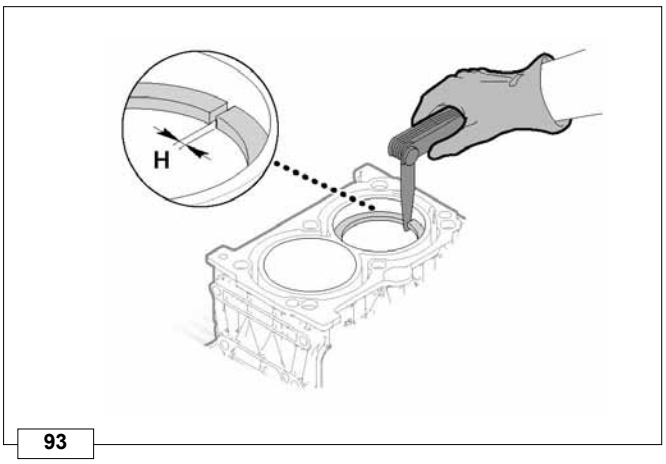

93

RINGS

Place a seal ring in the cylinder and measure the ring end gap using a thickness gauge (**H**).
Repeat for all the seal rings.
If the ring end gap does not correspond to the values indicated in the table, replace the seal ring with an original spare part.

Seal ring dimensional table

Seal rings	Ring end gap (mm)	Wear limit (mm)
1°	0,25÷0,40	0,95
2°	0,30÷0,50	1,05
3°	0,25÷0,55	1,10

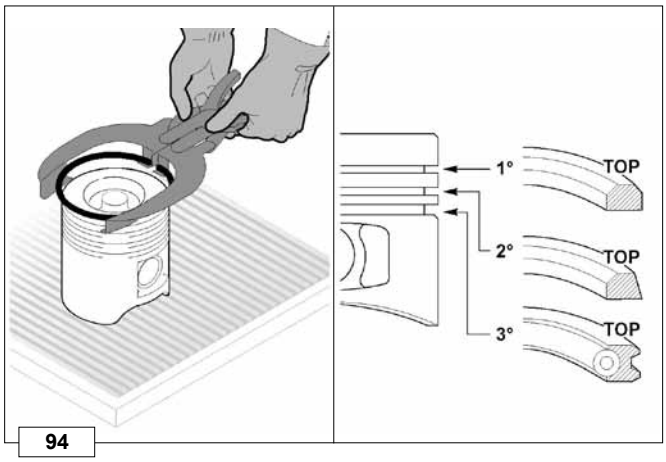

94

Install the seal rings on the piston in the order shown in the figure.

Important
Set the seal rings with their marking turned towards the piston crown.

Important
Protect the contact surfaces with lubricating oil, to prevent them from rusting.

https://truckmanualshub.com/

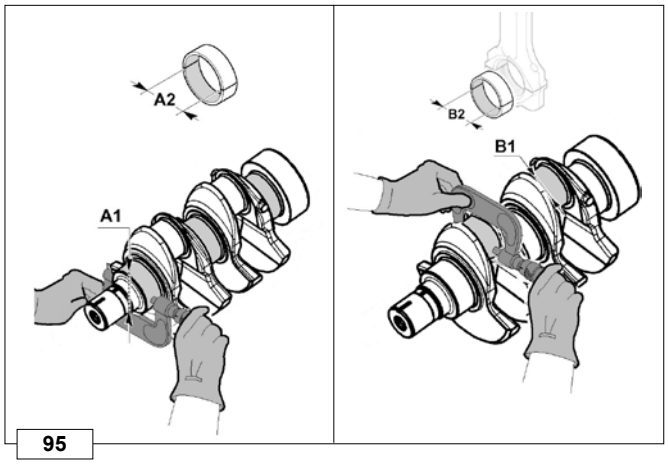

95

CRANKSHAFT

Dimensional check and overhauling

Wash the crankshaft thoroughly using suitable detergent.
Introduce a pipe cleaner into the lubrication ducts to remove any residual dirt.
Use a jet of compressed air to thoroughly clean the oil passages.
Check the surfaces of the main journals and crankpins for Wear limit to see whether grinding is necessary.
Using a micrometer, measure the diameter of the main journals (**A1**) and crankpins (**B1**).
Couple the engine block with its crankshaft half-bearings and tighten to the specified torque (see page 105). Using a dial gauge, measure the internal diameter of the crankshaft and connecting rod half-bearings (**A1** and **B2**).
The gear on the crankshaft is timed by means of a key and installed after heating at a stabilized temperature of 180°C for 5 minutes.

Connecting rod and crankshaft half-bearings - Diameters

Rif.	Dimensions (mm)	Wear limit (mm)	Clearance (mm)	Max clearance (mm)
A1	47,984÷48,000	47,96	**A2-A1** = 0,019÷0,081	0,12
A2	48,019÷48,065	48,08		
B1	38,984÷39,000	38,97	**B2-B1** = 0,027÷0,072	0,10
B2	39,027÷39,056	39,07		

Important
Protect the contact surfaces with lubricating oil, to prevent them from rusting.

Important
– Half-bearings cannot be replaced separately.
– If it is necessary to grind the crankshaft, define the diameters of the main journal and crankpin to choose the available coupling measures for the new crankshaft and connecting rod half-bearings (see table "Connecting rod and crankshaft half-bearings - Diameters").
– When grinding the crankshaft it is possible to undersize the main journals and crankpins by 0.25 and 0.50 mm.

Caution - Warning
The crankshaft and connecting rod half-bearings are made out of special lead-free material, and hence must strictly be replaced with new ones every time they are removed in order to prevent seizure.
Protect the contact surfaces with lubricating oil, to prevent them from rusting.

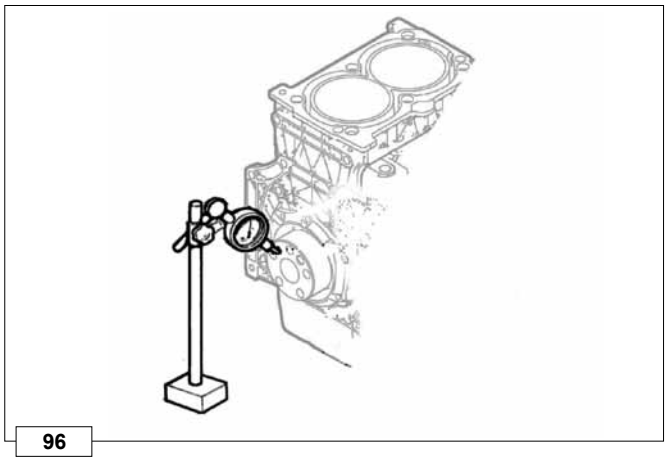
96

CRANKSHAFT - Axial clearance check

To measure the axial clearance of the crankshaft, it is necessary to assemble the shaft in the crankcase complete with engine block. See “Assembling the crankcase” on page 105 for the correct procedure.
Using a dial gauge, measure the axial shift of the crankshaft.
Axial shift must be between 0.10÷0.22 mm.

Important
If the axial clearance between the crankshaft and the crankcase is above 0.60 mm, it is necessary to replace the whole engine block.

https://truckmanualshub.com/

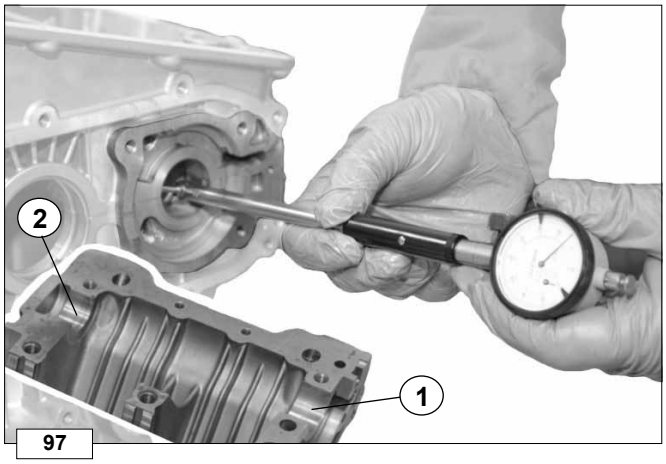

97

BALANCE COUNTERSHAFTS - Pin housing diameters

Couple the two engine blocks and tighten to the specified torque (see on page 105). Using a dial gauge, measure the pin housing internal diameters (**1** and **2**), see "Table for determining countershaft housing and pin clearance".

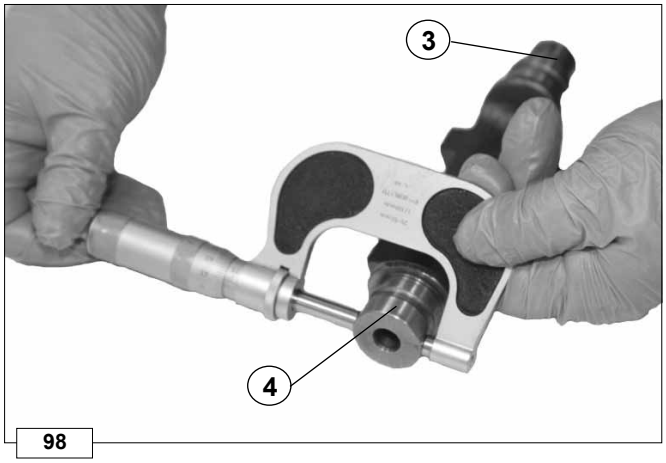

98

Check the pin surfaces for Wear limit and integrity.

Use a micrometer to measure the pin diameter (**3** and **4**).

Check in the following table the pin clearance.
If the resulting clearance does not comply with the specified tolerances, replace the balance shaft or the engine blocks.

Table for determining countershaft housing and pin clearance

	Balance shaft pin	Balance shaft housing	Clearance	Wear limit
Timing system side (1-3)	30,955÷30,940	31,000÷31,025	0.045÷0.085	0,100
Flywheel side (2-4)	27,955÷27,940	28,000÷28.021	0.045÷0.081	0,960

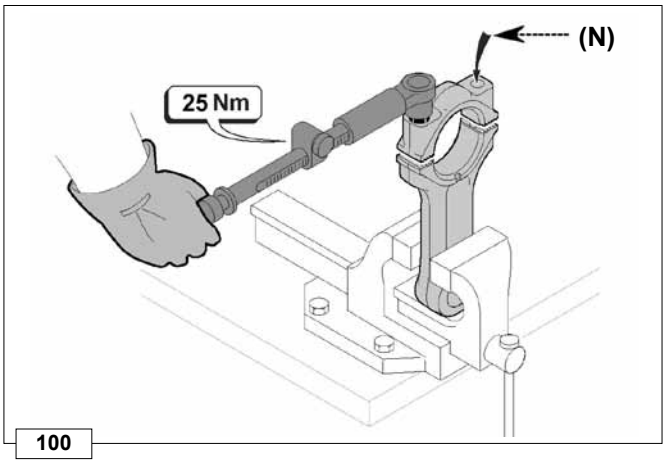

100

CONNECTING ROD - Dimensional check and overhauling

Check that the contact surfaces are perfectly clean and intact.

Caution - Warning

The crankshaft and connecting rod half-bearings are made out of special lead-free material, and hence must strictly be replaced with new ones every time they are removed in order to prevent seizure.

Assemble the cap (**N**) on the big end together with the new half-bearings and then tighten the screws to a torque of 25 Nm.
Using a dial gauge, measure the diameters **C** - **B**.

https://truckmanualshub.com/

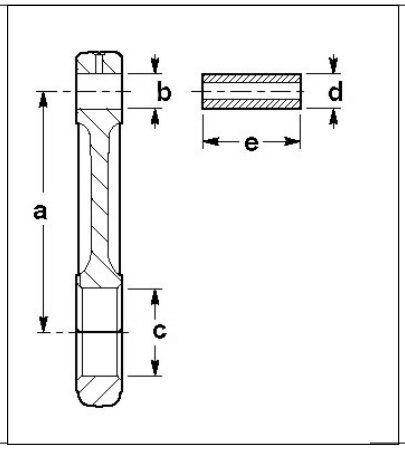

101

Connecting rod dimension table

Rif.	Dimensions (mm)	Clearance (mm)	Wear limit (mm)
A	109,98÷110,02	**B - D** 0,025÷0,04	0,07
B	20,025÷20,035		
C	19,995÷20,000		
D	39,027÷39,056		
E	43,8÷44,0		

Important

- **Make sure that the connecting rod and crankshaft half-bearings are properly matched (see “Table of crankshaft and connecting rod half-bearing dimensions”).**
- **The connecting rod half-bearings are supplied with undersized dimension, with respect to the nominal dimension of 0.25 mm e 0.50 mm.**
- **If the small end (B) diameter does not perfectly match with the one of the gudgeon pin (D), it is necessary to replace the small end bearing to obtain the correct coupling (see "Connecting rod dimension table").**
- **Protect the contact surfaces with lubricating oil, to prevent them from rusting.**

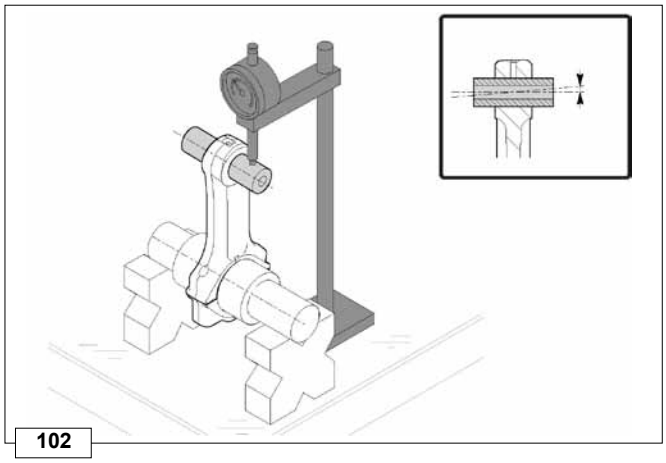

102

CONNECTING ROD

Check of axis parallelism

Insert the gudgeon pin in the connecting rod small end.
Use a dial gauge to check the axis parallelism of the connecting rod big end and small end.
Parallel deviation, measured at the very tip of the gudgeon pin, must not exceed 0.015÷0.030 mm.
If the measured values do not comply with the specified ones, replace the connecting rod with an original spare part.
Before replacing the connecting rods, check that the weight difference between the two integral preassembled connecting rod/ piston/gudgeon pin assemblies does not exceed 8 g, to prevent weight imbalances.

Important

Protect the contact surfaces with lubricating oil, to prevent them from rusting.

https://truckmanualshub.com/

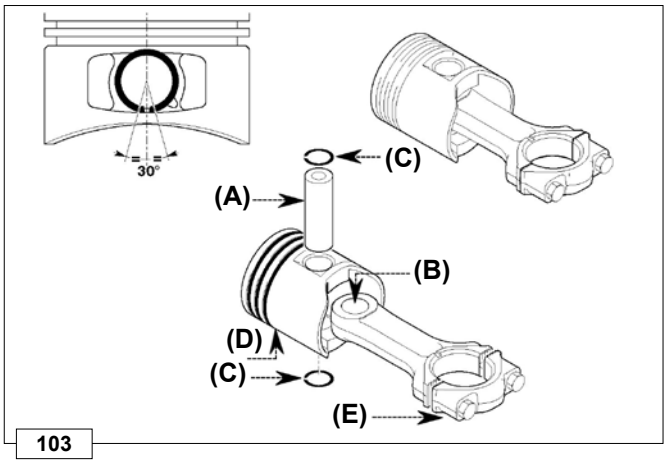

103

Important

Before carrying out the pre-assembly, check that the weight difference between the two connecting rod/piston/gudgeon pin assemblies does not exceed 8 g, to prevent weight imbalances.

Lubricate the gudgeon pin (**A**) and the seat of the small end of the connecting rod (**B**).
Install the lock ring (**C**) on the piston complete with seal rings (**D**).

Important

Insert the lock rings with their tips turned towards the piston base (15° tolerance).

Insert the gudgeon pin (**A**) in the piston (**D**) and assemble the connecting rod (**B**) (complete with cap (**E**)).
Insert the gudgeon pin completely and fasten it with the second lock ring (**C**).

Important

Check that the lock rings are correctly housed in their seats. Lubricate the coupling surfaces and the ones that are prone to oxidation.

104

Head gasket - Determining the thickness

After determining the value **A** and identifying the correct head gasket, assemble it referring to the centring pins.

Important

The head gasket must be replaced every time it is disassembled.

Head gasket selection and clearance volume table

A (mm)	Number of holes		Clearance volume (mm)
0,280÷0,380	1	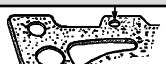	0,340÷0,440
0,381÷0,480	2	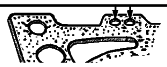	0,340÷0,439
0,481÷0,580	3	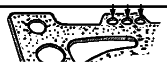	
0,581÷0,680	4	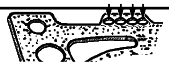	

https://truckmanualshub.com/

105

VAPOUR RECIRCULATION VENT

Unscrew the four fastening screws of the cover and remove it.

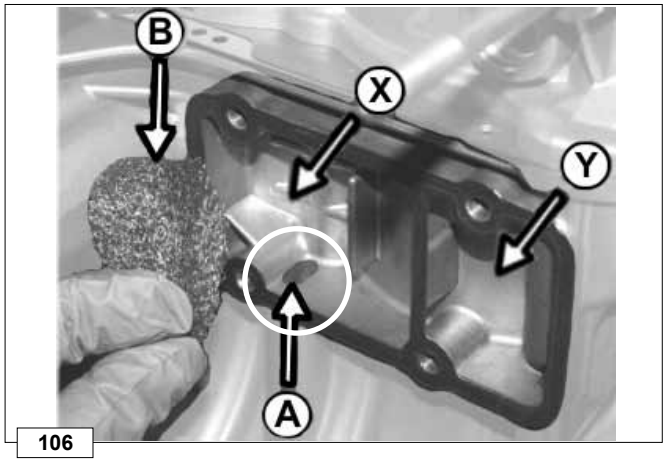

106

Vapour recirculation vent - Operating principle

The vapours are discharged through the duct **A** and then reach the first decanting chamber **X**.
The function of the metal filter element **B** is to slow down the vapours in order to let them condense.
The drops of condensed oil, having a greater specific weight than the vapours, flow back to the oil sump trough the same duct **A**.
The vapours then pass from the decanting chamber **X** to the chamber **Y** through a labyrinth that allows for further condensation.
The vapours now condensed flow back to the sump through the hole **D**. The vapour left will be conveyed trough the duct **E** to the inlet manifold.

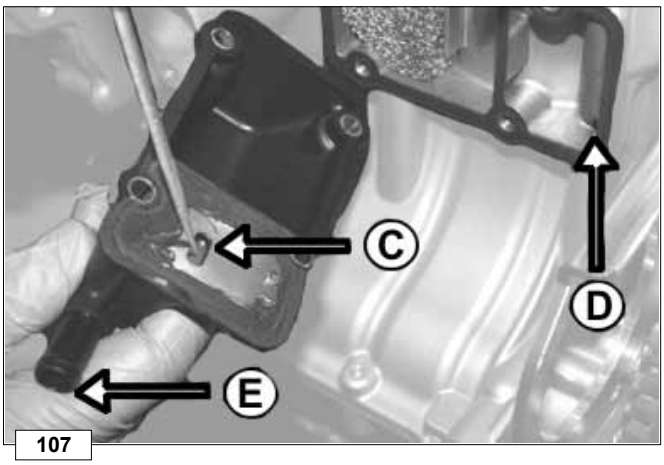

107

The reed valve **C**, that opens and closes according to the piston alternate motion, allows for maintaining a constant vacuum inside the engine block.

Check the seal of the valve **C**. If sealing is not perfect, replace the whole vent cover.
Wash the filter element **B** or replace it if completely clogged.
Check that the oil recovery hole **D** is not clogged.

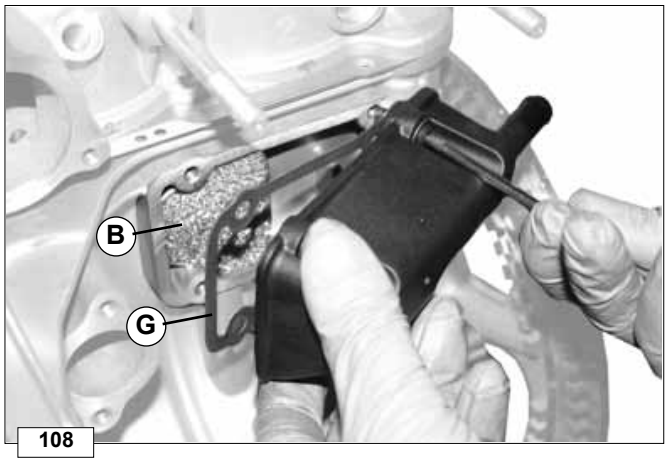

108

VAPOUR RECIRCULATION VENT

Important
When reassembling, always replace the gasket G.

Insert the metal filter element **B** in its housing and reinstall the cover of the vapour recirculation vent.

❍ Tighten the screws to a torque of 10 Nm.

https://truckmanualshub.com/

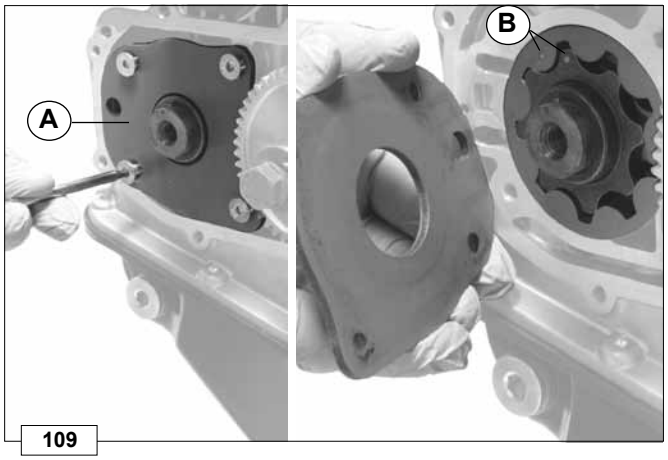

109

OIL PUMP

To overhaul and check the oil pump proceed as follows: disassemble the plate **A**, disassemble the rotors, thoroughly clean all the components and check for Wear limit of the working surfaces (rotors and pump casing in the crankcase) by referring to the relevant table for the values.
Install the rotors with the references **B** turned towards the installer.

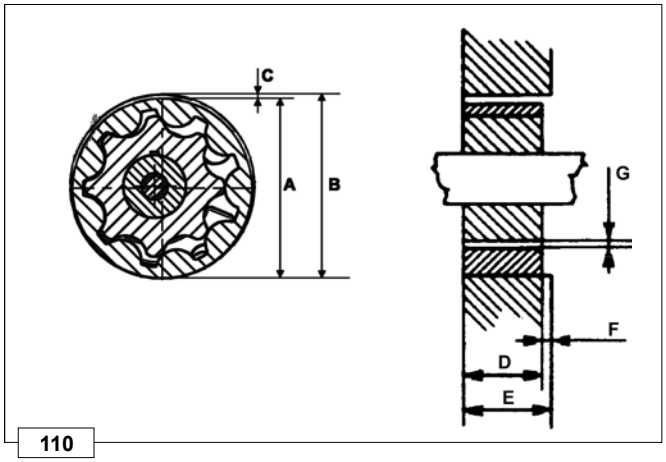

110

Rotor seat diameter “**B**”	70,40÷70,43
Rotor external diameter “**A**”	69,95÷70,00
Seat - Rotor clearance “**C**”	0,40÷0,48
Rotor height “**D**”	6,98÷7,00
Rotor seat depth “**E**”	7,020÷7,045
Side clearance between rotors and pump casing “**F**”	0,020÷0,065
Radial clearance between rotors “**G**”	0,176

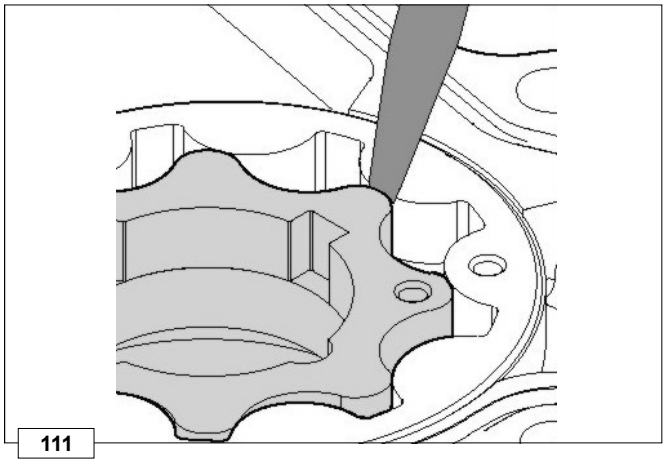
111

Using a thickness gauge, measure the clearance between the rotor teeth.
If clearance is above the 0.250 mm limit for wear, replace the rotors with original spare parts.
Check that the contact surfaces are perfectly clean, intact and not deformed.

https://truckmanualshub.com/

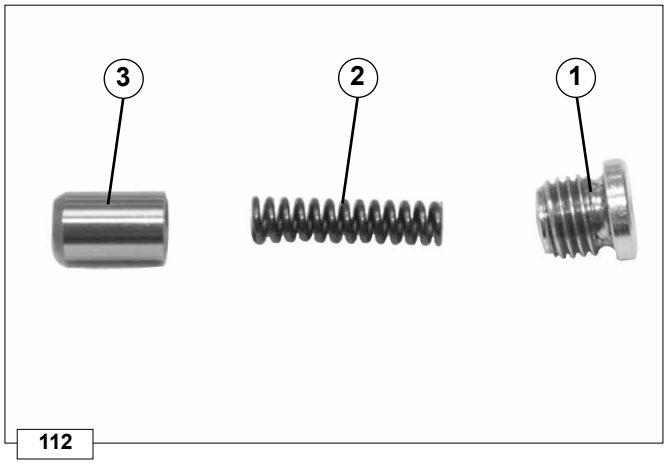

112

OIL PRESSURE RELIEF VALVE

Key to components

1. Plug
2. Spring
3. Piston

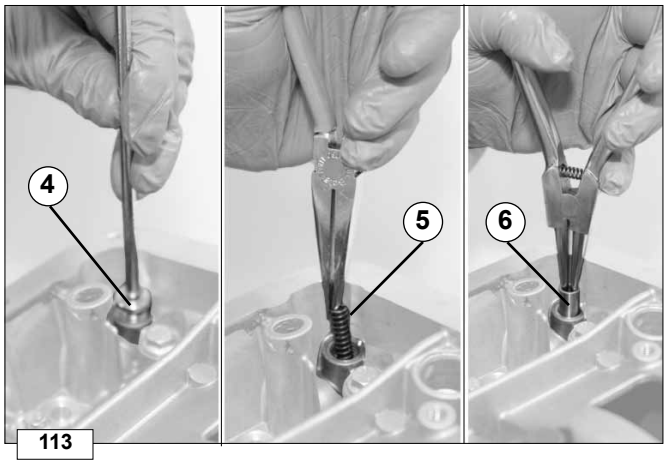

113

The oil pressure relief valve is located in the lower crankcase. Unscrew plug **4**, pull out spring **5** and piston **6**

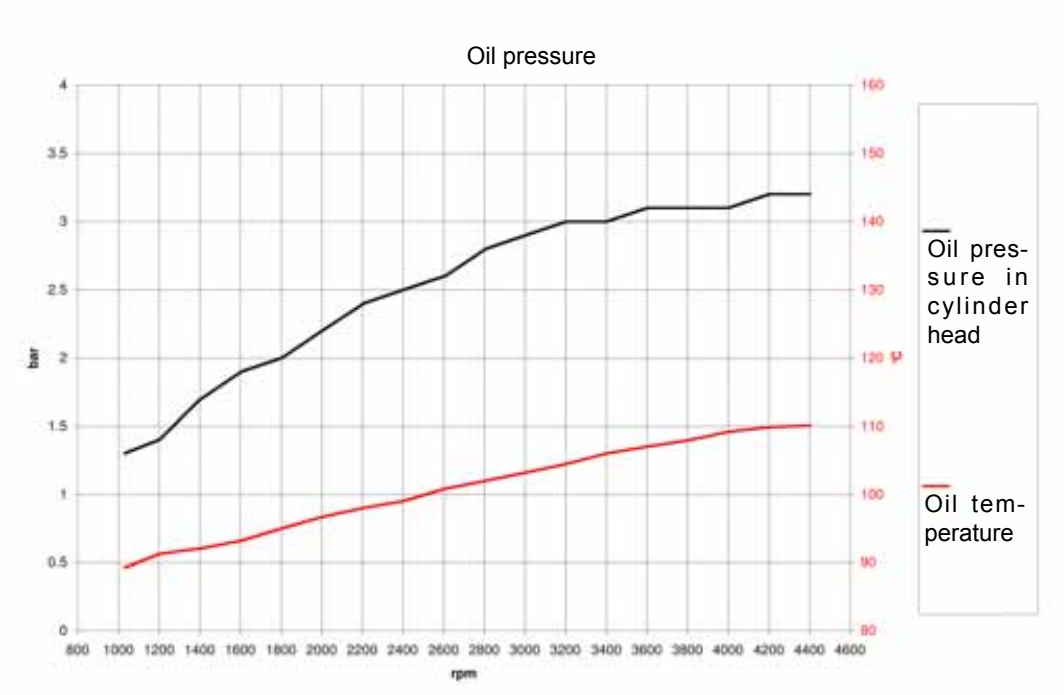

https://truckmanualshub.com/

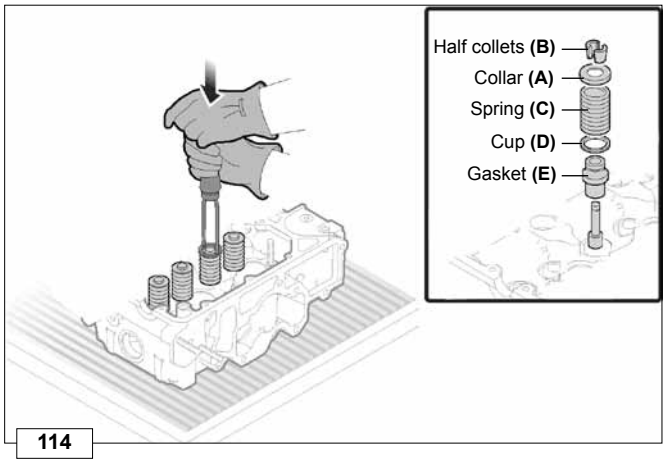

114

CYLINDER HEAD AND COMPONENTS - Overhauling

Valve disassembly

1 - Place the cylinder head on the workbench.
2 - Press hard on the valve collar (**A**) using the special tool.
3 - Disassemble the cotters (**B**) that secure the cup (**A**), the spring (**C**), the cup (**D**) and the seal (**E**).

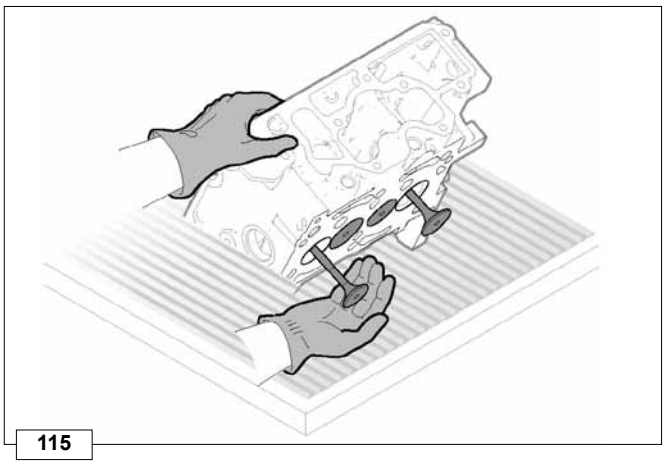
115

4 - Pull out the valves.

Important
When disassembling the valves, keep the components of the different valves together to allow correct reassembly of the valves.

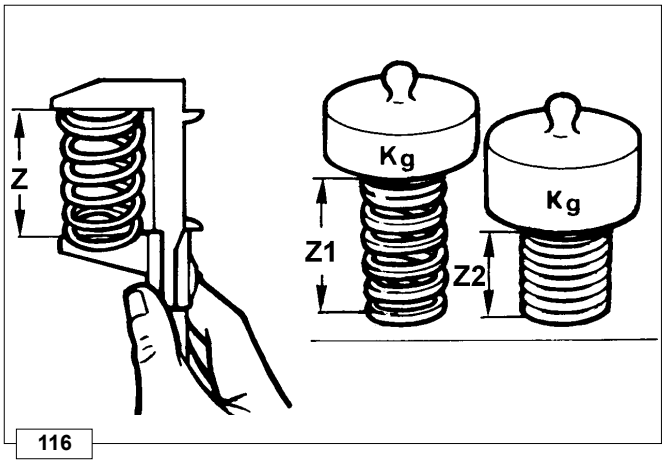

116

VALVE SPRINGS

Use a gauge to measure the free length.
As shown in the figure, apply two different weights to the spring and check with a dynamometer that the values comply with the ones below.

Free length **Z** ..... = 45.7 mm
Length **Z1**
compressed by a force of 20.4 kg ..... = 27.2 mm
Length **Z2**
compressed by a force of 34.8 kg ..... = 34.8 mm

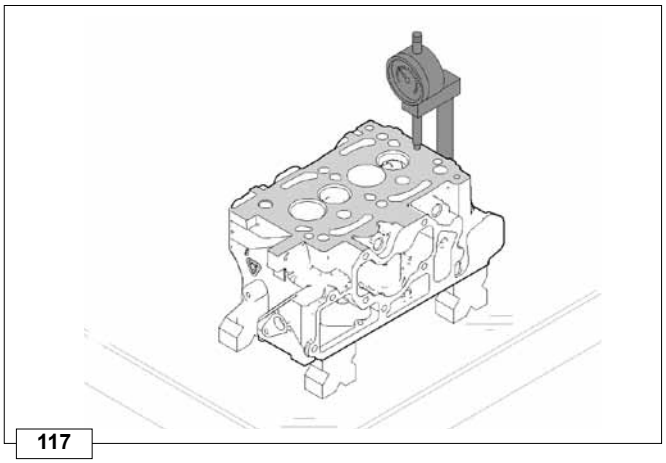
117

Flatness check

Place the cylinder head on a surface plate and position it with the corners on the stud bolts.
Use a dial gauge to check the cylinder head levelness.

Important
If the level deviation is greater than 0.10 mm, the cylinder head must be ground, removing no more than 0.20 mm.

https://truckmanualshub.com/

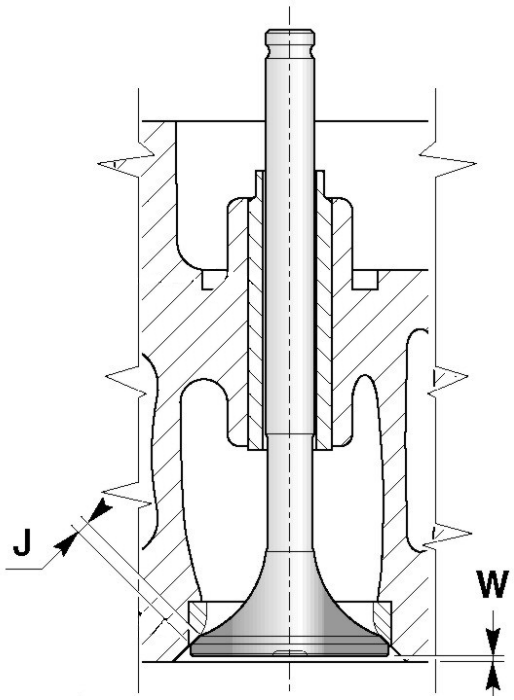

118

Valve seats - Check

Thoroughly clean the valves and their seats.
Measure the width of the seal (**J**) for each valve and the indentation (**W**) from the cylinder head surface (see "Valve stem/Valve guide dimension table").
If the dimensions measured do not match with the above-mentioned values, replace using original spare parts.
Use a pointed tool to take out the valve seats.
Remove any debris, clean the valve seat housing carefully and scrape the opening.
Lubricate the new valve seats and put them into the housing manually.
Use the special tool to put the valve seats into the housing.
Slide the valves into their seats.
Measure the degree of indentation of each valve with respect to the cylinder head surface (see "Valve stem/Valve guide dimension table").
If the measured values do not comply with the specified ones, grind each valve in its seat.

Important
Since the seats are prefinished, they are not to be worked again after they have been driven in the head.

Important
Protect the contact surfaces with lubricating oil, to prevent them from rusting.

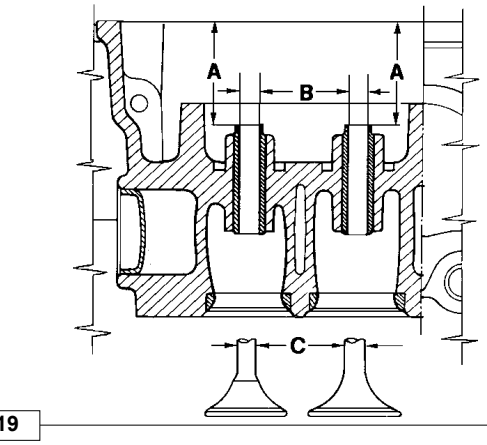

119

Valve guides - Overhauling and Check

Use a micrometer to measure the diameters of the valve stems **C** and a dial gauge to measure the valve guide diameters **B** (see "Valve stem/Valve guide dimension table").
If the diameters do not comply with the specified ones, replace the valves and guides with original spare parts.
After being driven, the intake and exhaust valve guides must result receding, with respect to the rocker arm support surface, by the value shown in the "Valve stem/Valve guide dimension table".

Important
Carry out the measurements in different points to detect any ovalization and/or concentrated wears.

Valve stem/Valve guide dimension table

Rif.	Dimensions (mm)	Clearance (mm)	Wear limit (mm)
ØB	6,005÷6,020	B - C 0,015÷0,06	0,10
ØC	5,978÷5,990		
A	57,3÷57,7		
W	0,6÷0,9		1,2
J	1,3÷1,4		1,75

https://truckmanualshub.com/

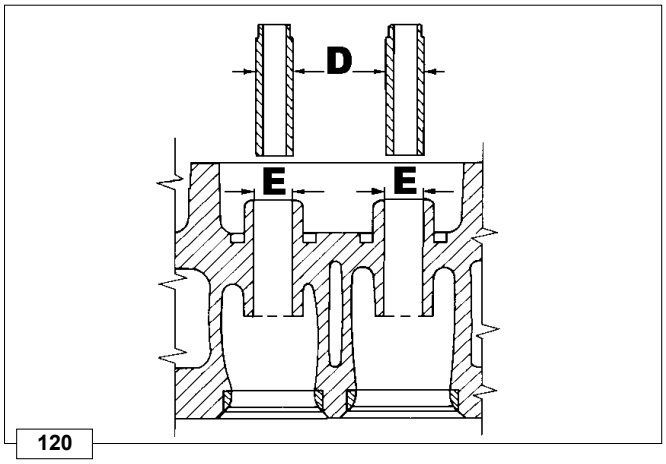

120

Valves guides and housings

The intake and exhaust guides are both made out of gray iron with pearlitic phosphoric matrix and they have the same dimensions:

Dimensions (mm):

D	E
10,045÷10,054	10,000÷10,018

Note: Since the guides are prefinished, they are not to be worked again after they have been driven in the head.

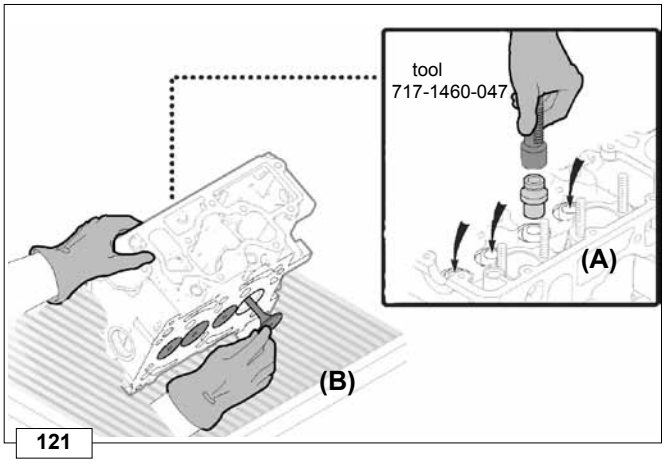

121

VALVES - Reassembly

Important

- **Check that the cylinder head has been perfectly washed and dried.**
- **Check that all components are intact and, if necessary, replace them with original spare parts.**

1- Generously lubricate the valve stem seal ring (**A**) and then fully insert it on the valve guide using the tool “717-1460-047”.
2 - Lubricate the valve stem (**B**).
3 - Slide the valve into its seat.

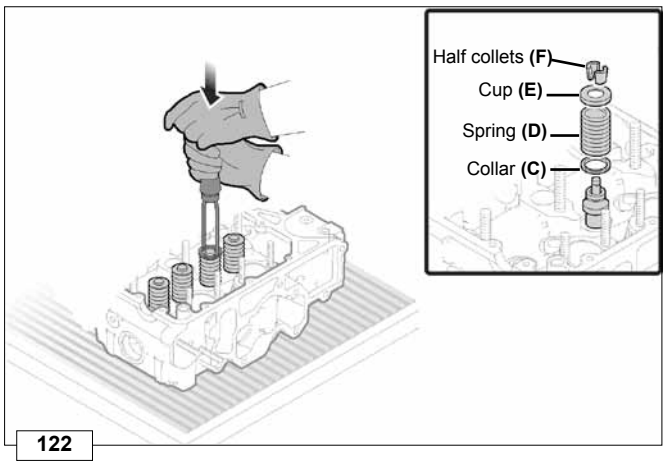

122

4 - Assemble the cup (**C**), spring (**D**), collar (**E**) and cotters (**F**).
5 - Press hard on the collar (**E**) using the special tool to insert the cotters (**F**) into the valve stem opening.
6 - Release the tool and check that the cotters are correctly positioned.
If the cotters are not correctly positioned, repeat the operation.
7 - Repeat the same operation on the other valves.

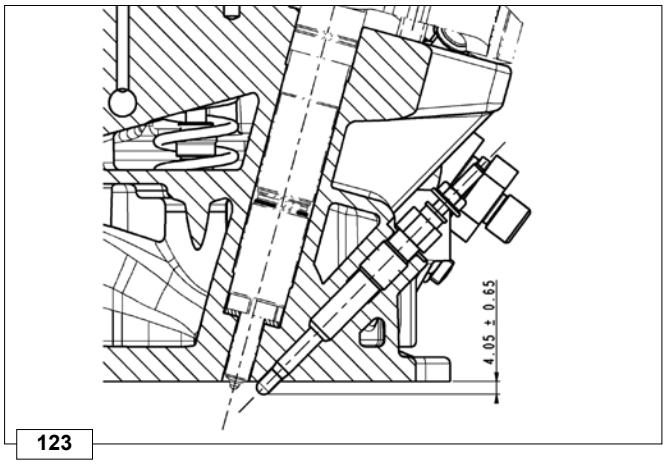

123

Glow plug specifications and injector protrusion

Description	Value
Operating voltage	11 V
Voltage range	7÷13.5 V
Performance	Single pole
Current	Max 30A

https://truckmanualshub.com/

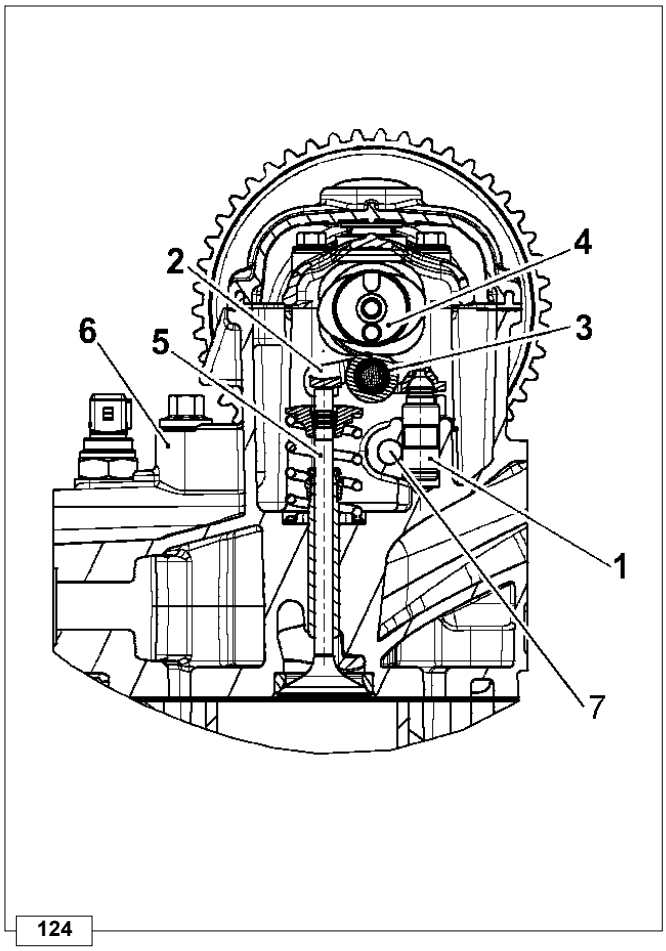

124

TIMING SYSTEM

Components:

1 Hydraulic tappet
2 Rocker arm
3 Rocker arm pin
4 Camshaft
5 Valve
6 Cylinder head
7 Lubrication line

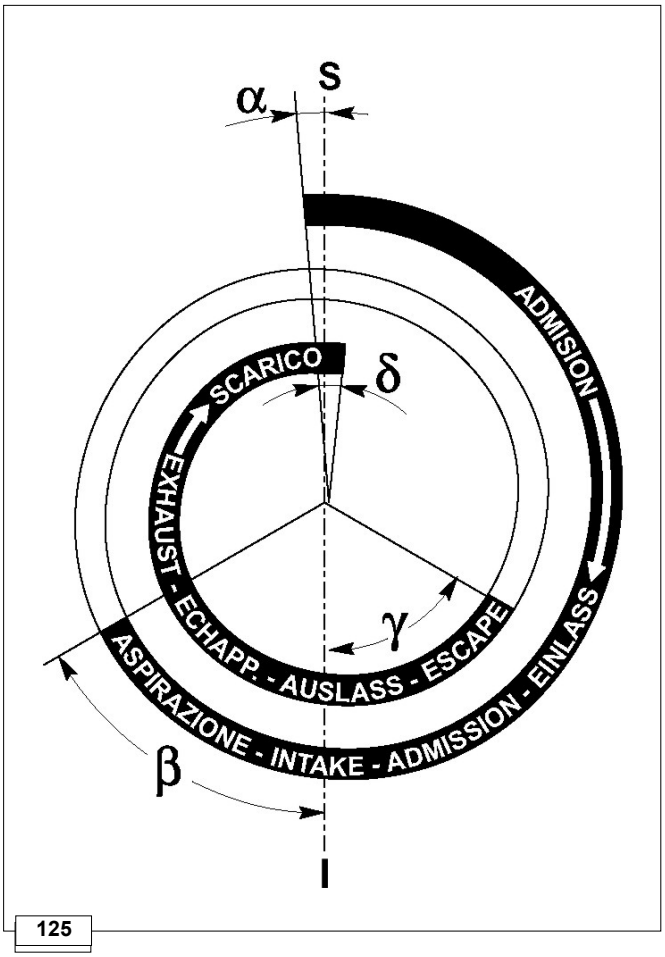

125

Timing angle scheme

Important

For information purposes, the timing angle values are provided below.
It must be pointed out that such values are not measurable on the engine because of the presence of the hydraulic tappets. They can be checked only when machining the camshaft.

Timing angle diagram:

α **= 10°** before **S** (top dead centre)
β **= 42°** after **I** (bottom dead centre)
γ **= 58°** before **I** (bottom dead centre)
δ **= 10°** after **S** (top dead centre)

https://truckmanualshub.com/

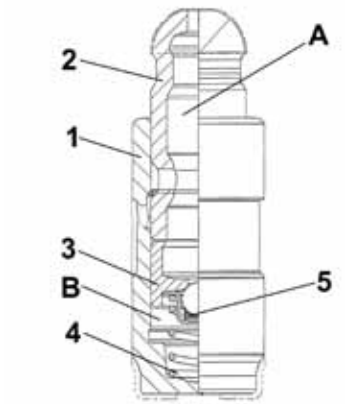

126

HYDRAULIC TAPPET

Components:

1 Tappet body
2 Low pressure piston
3 High pressure piston
4 Spring
5 Non-return valve
A Low-pressure chamber
B High-pressure chamber

The operating principle of the hydraulic tappet is based on the incompressibility of liquids and on controlled leakage.
The oil under pressure enters the tappet chamber **A**, providing a constant supply of oil in the low-pressure chamber.
The oil can only enter the high-pressure chamber **B** through the non-return valve **5** and leave via the clearance between the piston **3** and the tappet body **1** (controlled leakage).
The chamber **B** is filled when the rocker arm is on the base radius of the cam, and the spring **4** keeps the piston **3** against the valve stem, thus eliminating any system plays. Because of the spring extension, the tappet "extends", thus creating a small depression in the chamber **B**. Such depression makes the non-return valve **5** open, thus allowing the oil in the chamber **A** to pass to chamber **B** to restore the correct oil quantity necessary to eliminate any plays in the valves.

Difficult operating conditions:

For correct operation of the hydraulic tappets, the pressure chamber of piston **3** must always be filled with oil.
Under certain conditions this may not happen, since oil leakage, with engine stopped, can lead to complete emptying of the tappets. This will result in valve plays entailing a characteristic sound, like a ticking, not to be confused with the normal ticking of the injectors.

1 - With cold engine, the tappet filling time could be very long if the oil used is not suitable for the specific environmental conditions (see prescribed oil on page 21).

2 - When the engine is hot, oil pressure may be low when running at idle, and small air bubbles could form up in the circuit. Because of this, the lubricant becomes compressible, thus compressing the tappet and producing a valve play which is responsible for the ticking sound.

However, the ticking sound should not last more than 5 minutes. If this is not the case, the problem is surely due to the insufficient oil level, to Wear limit or to clogging of the ball valve and its seat in the piston preventing the tappet from operating correctly. In this case, the only solution is to change the oil and replace the hydraulic tappets.

https://truckmanualshub.com/

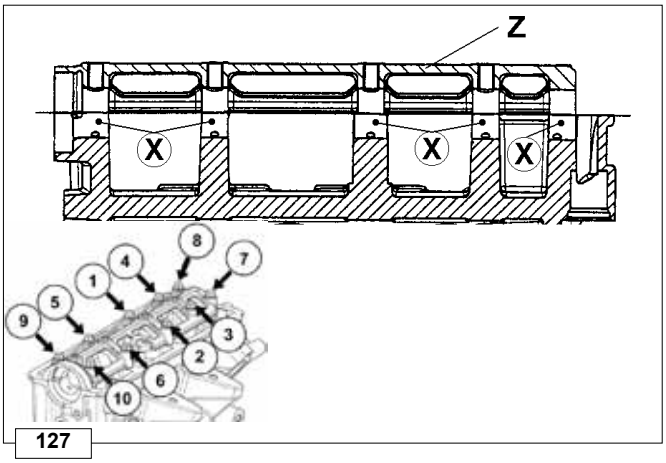

127

CAMSHAFT

Before measuring the camshaft housings **X** on the cylinder head, couple the camshaft bearing **Z** and the cylinder head and tighten to a torque of 10 Nm, following the order shown in the figure.

Important
Failure to perform a proper tightening could result in breakage or deformation of the camshaft bearing.

Important
The camshaft bearing is machined on the basis of the cylinder head to which it is coupled. Therefore, it cannot be supplied separately.

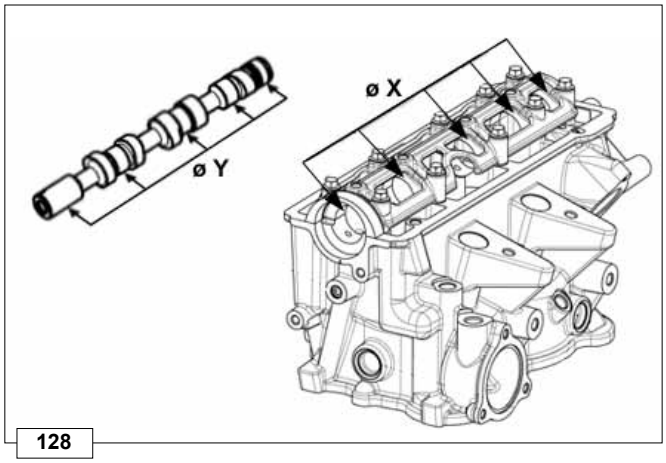

128

Use a dial gauge to measure the diameters of the housings **(X)** and a micrometer to measure the diameters of the camshaft **(Y)** (see "Table of camshaft dimensions").

Table of camshaft dimensions

Rif.	Dimensions (mm)	Clearance (mm)	Wear limit (mm)
ØX	25,035÷25,060	ØX - ØY= 0,035÷0,081	0,150
ØY	24,979÷25,000		

If the diameters do not comply with the specified values, replace the camshaft or the cylinder head with an original spare part.

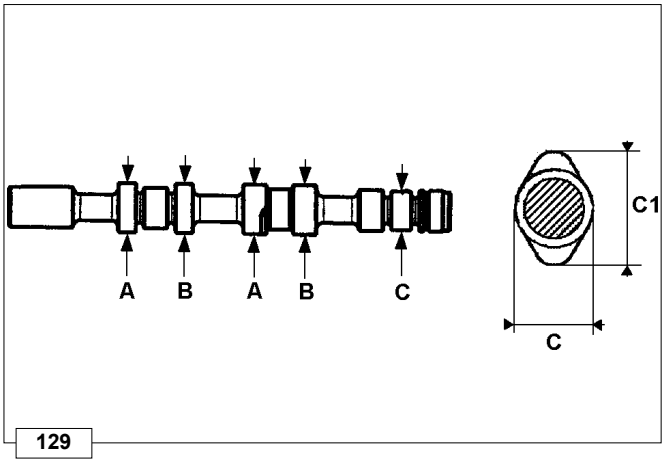

129

Important
In case of breakage or wear of the camshaft cover, replace the whole cylinder head.

Use a micrometer to measure the maximum dimensions of the involutes of the intake, exhaust and high-pressure pump cams (see "Table of cam dimensions").

A Intake cam
B Exhaust cam
C High-pressure pump cam

If the dimensions of cam involutes are lower than the values shown by 0.1 mm (maximum dimension), replace the camshaft with an original spare part.

Table of cam dimensions

Rif.	Ø Dimensions (mm)
A	33,738÷33,763
B	33,542÷33,567
C	23,950÷24,000
C1	35,350÷35,400

Important
Protect the contact surfaces with lubricating oil, to prevent them from rusting.

Assemble the camshaft on the cylinder head and check that the axial clearance is 0.05÷0.20.
If the axial clearance does not comply with this value, replace the cylinder head or the camshaft.

https://truckmanualshub.com/

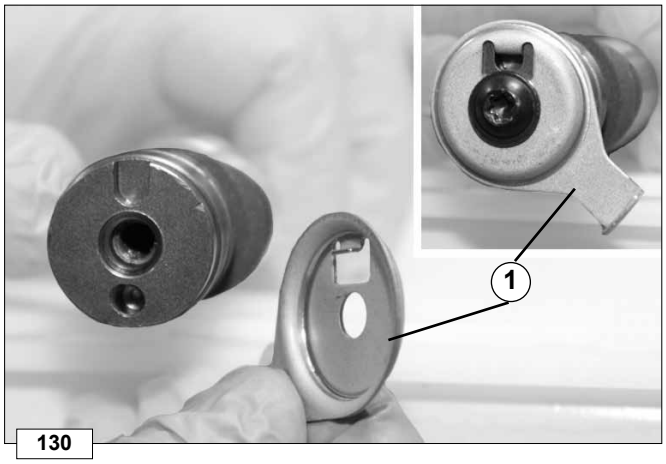

130

PHASE SENSOR PLATE

The phase sensor plate must be assembled with its reference correctly housed in its seat on the camshaft.

❍ Tighten the fastening screw to 10 Nm.

Important

If the phase sensor reference plate 1 is bent or incorrectly assembled, the engine may have starting problems and/or irregular performances.

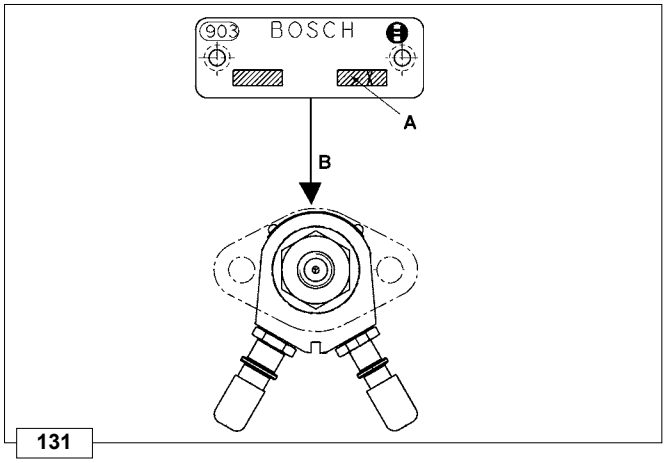

131

HIGH-PRESSURE PUMP
Determining the thickness of the injection pump pad

➲ Refer to page 24 for the characteristics.

A Position of the pump pre-stroke code number
B Position of the plate on the high-pressure pump

Caution - Warning

The importance of determining the correct thickness of the pad between the tappet and the injection pump is due to the fact that such thickness represents the pre-stroke value of the high-pressure pump. An incorrect pre-stroke value will prevent reaching the correct fuel pressure and delivery values in the Common Rail.

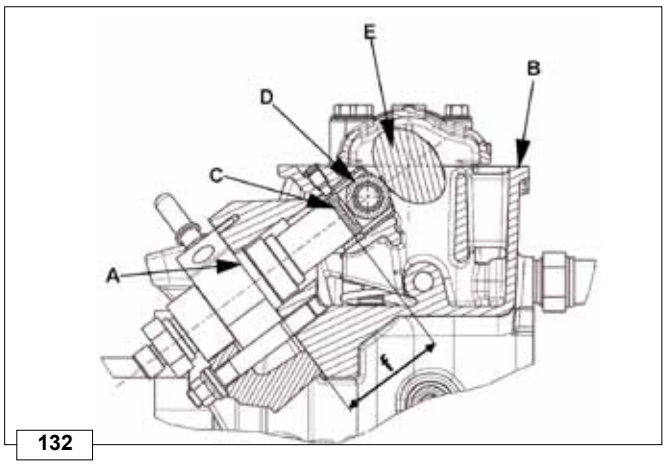

132

Key to components:

A Pump seal
B Cylinder head
C Pad
D Roller tappet
E Camshaft
F Distance value between pump level and pad

133

1. Position the cam moving the high-pressure pump on its base radius, as shown in fig.132.

2. Use a depth gauge to measure the value **f** between the injection pump level on the cylinder head and the pad.

https://truckmanualshub.com/

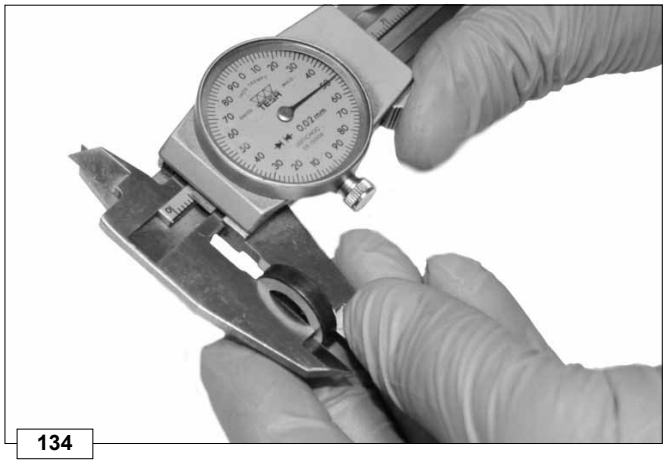

Measure the pad thickness and add it to the value **F**.
The result will be the value **X** as shown in the following table.
Check the pre-stroke code printed on the injection pump.
To determine the correct thickness, match the value **X** measured with the injection pump code in the following table.

Table for determining the correct pad

X VALUE (measured) measured value + pad thickness	Injection pump			
	0	+ 1	+ 2	+ 3
	Pad thickness selection			
48,25 48,34	4,2	4,1	4,0	3,9
48,35 48,44	4,3	4,2	4,1	4,0
48.45 48.54	4,4	4,3	4,2	4,1
48.55 48,64	4,5	4,4	4,3	4,2
48,65 48,74	4,6	4,5	4,4	4,3
48,75 48,84	4,7	4,6	4,5	4,4
48,85 48,94	4,8	4,7	4,6	4,5
48,95 49,04	4,9	4,8	4,7	4,6
49,05 49,14	5,0	4,9	4,8	4,7
49,15 49,24	5,1	5,0	4,9	4,8
49,25 49,34	5,2	5,1	5,0	4,9
49,35 49,44	5,3	5,2	5,1	5,0
49,45 49,54	5,4	5,3	5,2	5,1
49,55 49,64	5,5	5,4	5,3	5,2
49,65 49,74	5,6	5,5	5,4	5,3
49,75 49,84	5,7	5,6	5,5	5,4

https://truckmanualshub.com/

https://truckmanualshub.com/

https://truckmanualshub.com/

https://truckmanualshub.com/

RECOMMENDATIONS FOR REASSEMBLY

– The instructions are provided in a sequential way, following a practical and chronological order. The working methods have been selected, tested and approved by the Manufacturer's technicians.
– This chapter describes all the installation procedures for assemblies and /or single components after overhauling, testing and, if necessary, replacement using original spare parts.

Important

To locate specific topics, the reader should refer to the index.

- The operator must wash, clean and dry components and assemblies before installing them.
- The operator must make sure that the contact surfaces are intact, lubricate the coupling parts and protect those that are prone to oxidation.
- Before any intervention, the operator should lay out all equipment and tools in such a way as to enable him to carry out operations correctly and safely.
- In order to operate safely and easily, we recommend positioning the engine on a rotating stand for engine overhauling.
- Before proceeding with operations, make sure that appropriate safety conditions are in place, in order to safeguard the operator and any persons involved.
- In order to fix assemblies and/or components correctly, the operator must tighten the fastening elements in a criss-cross or alternating pattern.
- For assemblies and/or components having a prescribed tightening torque, first tighten to a lower torque, then carry out the final torque to the prescribed value.

139

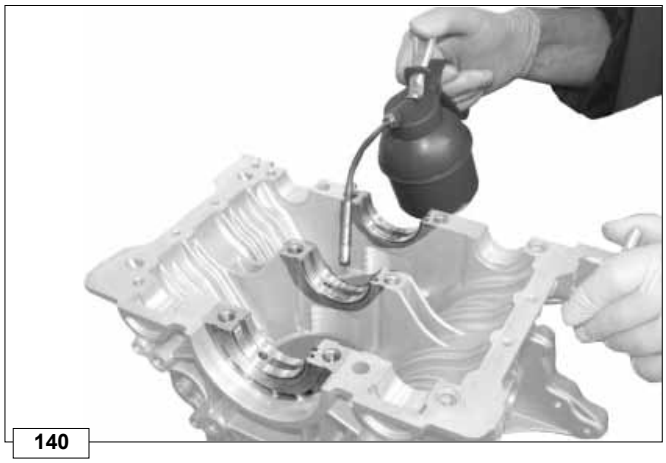

140

UPPER CRANKCASE

Crankshaft half-bearings

Thoroughly clean the main bearings and install the new half-bearings.

Caution - Warning

The crankshaft and connecting rod half-bearings are made out of special lead-free material, and hence must strictly be replaced with new ones every time they are removed in order to prevent seizure.

Important

- The half-bearings cannot be replaced separately.
- If it is necessary to grind the crankshaft, define the diameters of the main journal and crankpin to choose the available coupling measures for the new crankshaft and connecting rod half-bearings (see table "Connecting rod and crankshaft half-bearings - Diameters").
- When grinding the crankshaft it is possible to undersize the main journals and crankpins by 0.25 and 0.50 mm.

Once installed, generously lubricate the three half-bearings.

https://truckmanualshub.com/

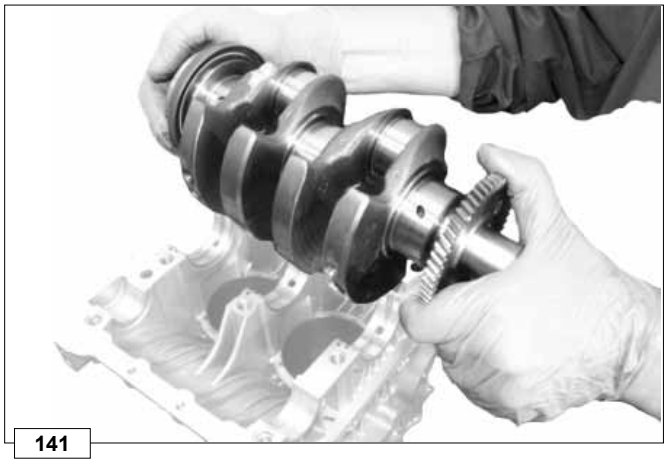

141

CRANKSHAFT

Lubricate the main journals, the half-bearings and assemble the crankshaft.

The gear on the crankshaft is timed by means of a key and installed after heating at a stabilized temperature of 180°C for 5 minutes.

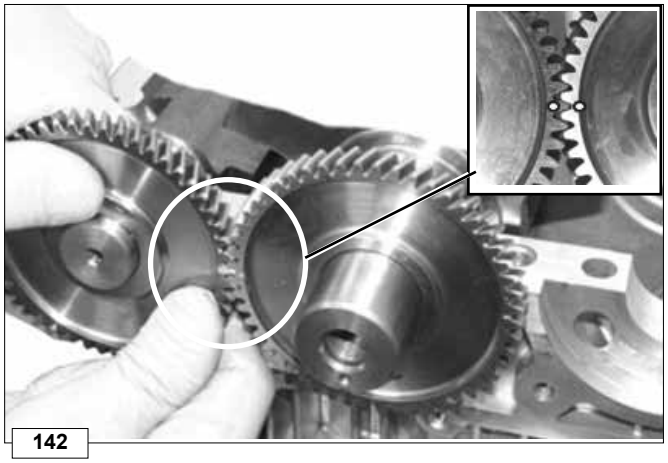

142

BALANCE COUNTERSHAFTS

Lubricate the contact surfaces and assemble the first balance countershaft.

The gear on the balance shaft is timed by means of a key and installed after heating at a stabilized temperature of 180°C for 5 minutes.

Important

Carry out the timing of the balance countershaft gear and crankshaft gear by aligning the two references on the gears.

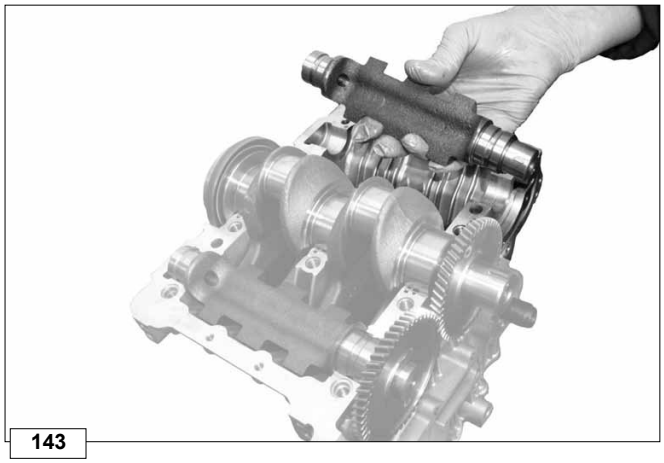

143

Thoroughly clean and lubricate the bearings of the second balance countershaft.

Assemble the second balance countershaft.

https://truckmanualshub.com/

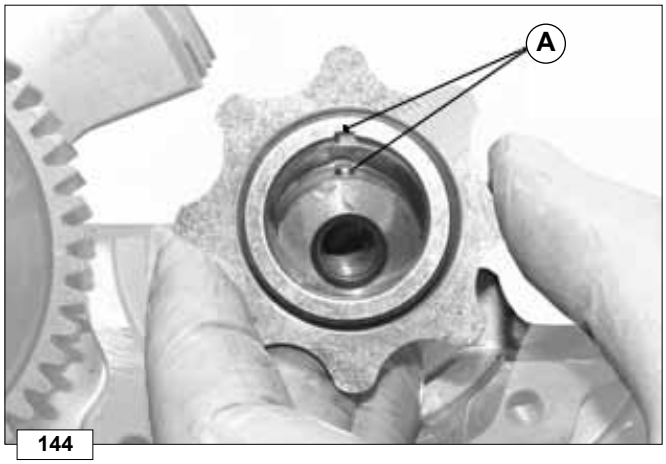

144

OIL PUMP - Lobes

The second countershaft controls the trochoid-type lobe oil pump. Insert the inner lobe by making the key **A** of the shaft coincide with the slot **A** of the lobe.

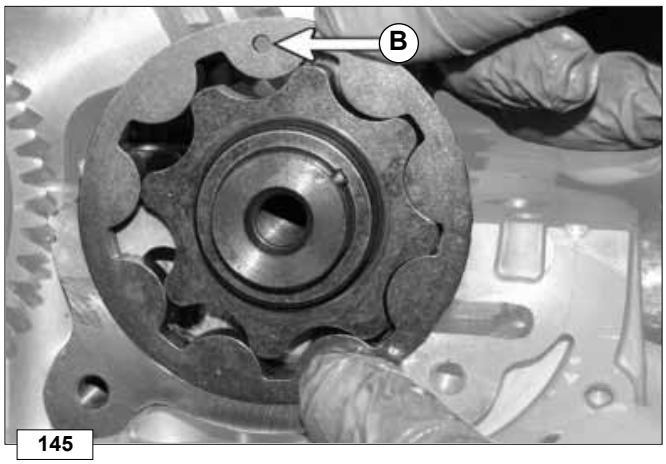

145

Important

The outer lobe must be installed with its reference B turned towards the installer.

146

LOWER CRANKCASE

Lower crankcase half-bearings

Thoroughly clean the lower crankcase main bearings and install the half-bearings.
Once installed, generously lubricate the three half-bearings.

Caution - Warning

The crankshaft and connecting rod half-bearings are made out of special lead-free material, and hence must strictly be replaced with new ones every time they are removed in order to prevent seizure.

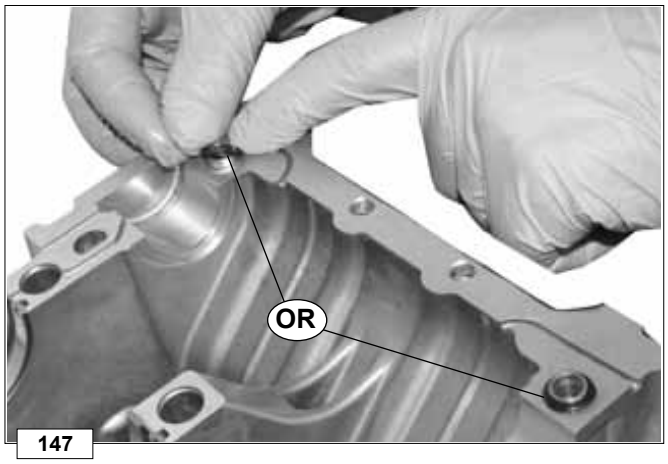

147

Important

The O-rings on the three centring bushes must be replaced before coupling the lower and upper crankcases.

https://truckmanualshub.com/

148

Apply a thin layer of sealant (Loctite 5450) on the lower crankcase sealing surface.

Caution - Warning

An excessive application of sealant may obstruct the passages of the lubrication channels.

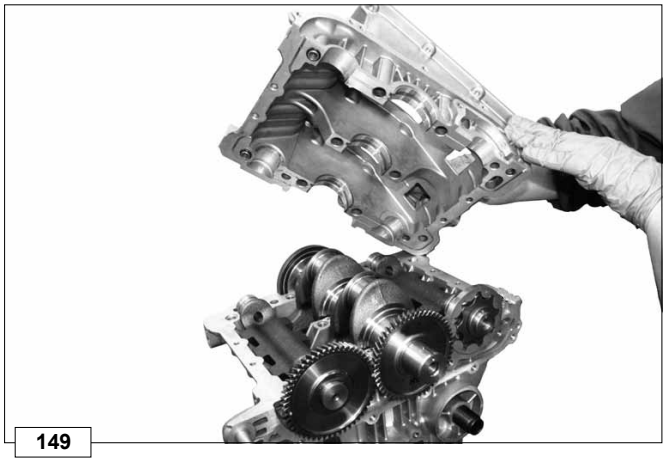
149

CRANKCASE - Fastening

When coupling the lower and upper crankcases, pay particular attention not to damage the **O-rings** on the three centring bushes.

Important

Pay attention to the oil pressure relief valve: if previously installed, during the lower crankcase assembly, it may protrude from its seat.

150

Tighten the lower and upper crankcase fastening screws. Strictly follow the order shown and keep to the prescribed torque values.

Bolt tightening torques:

1) Bolts M 10x1.5 : ..... 50 Nm (1-2-3-4-5-6)
2) Bolts M 8 : ..... 25 Nm (7-8-9-10)
3) Bolts M 6 : ..... 10 Nm (11-12-13-14).

PHASE 1

Tighten all the bolts to a torque of 10 Nm, following the order shown in the figure.

PHASE 2

Tighten all the bolts to a torque of 25 Nm, except for the M6 bolts (11-12-13-14).

PHASE 3

Tighten the bolts (from 1 to 6) to a torque of 50 Nm.

Important

Non compliance with the assembly specifications may result in crankshaft blocking.

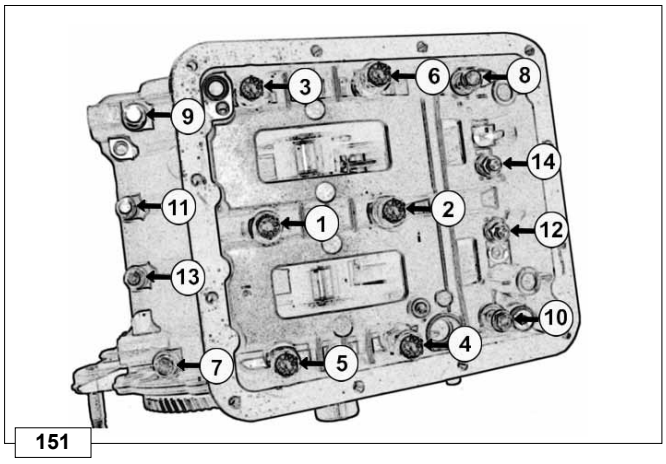

151

https://truckmanualshub.com/

152

OIL PUMP - Plate

Generously lubricate the lobes and the delivery and suction pockets of the oil pump, then assemble the plate.

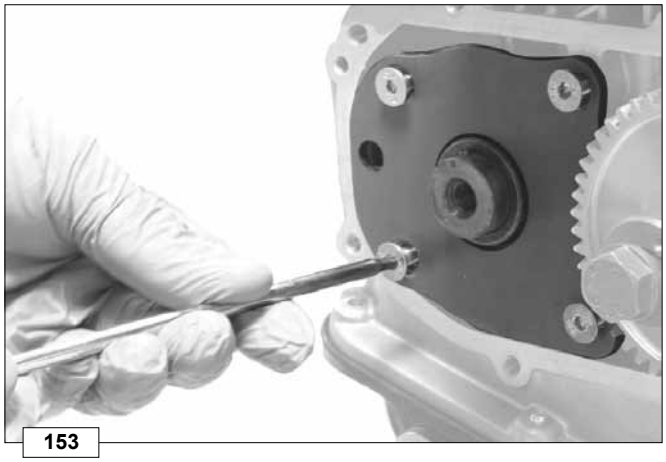
153

Tighten the plate screws in a criss-cross pattern.

❍ Tighten the screws to a torque of 10 Nm.

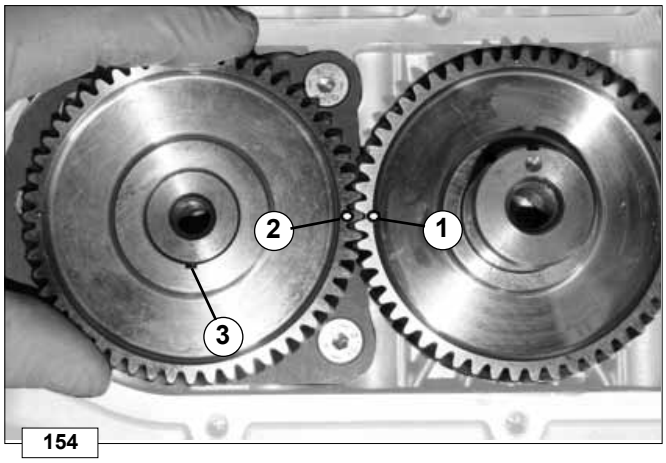

154

Install the balance shaft gear, by making its reference **1** coincide with the one of the crankshaft gear **2**, and the key **3** of the balance countershaft.

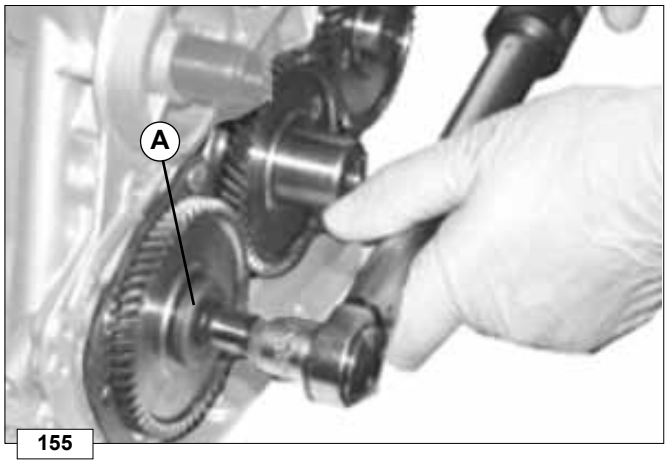

155

Caution - Warning

Insert the centring washer A before tightening the screw.

❍ Tighten the screw to a torque of 60 Nm.

https://truckmanualshub.com/

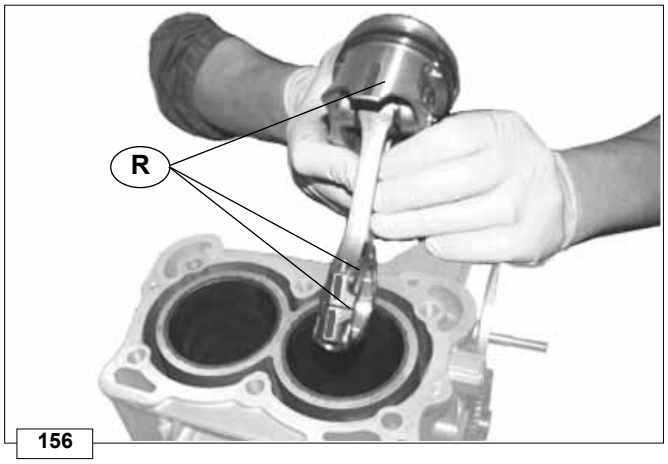

156

PISTON / CONNECTING ROD / GUDGEON PIN - Assembly

Check that the order of the references **R**, marked during the disassembly phase, matches the cylinder where the assembly (connecting rod, piston, gudgeon pin) is going to be installed, see on page 76.

Generously lubricate the cylinder, rings and connecting rod bearings.

Caution - Warning

The crankshaft and connecting rod half-bearings are made out of special lead-free material, and hence must strictly be replaced with new ones every time they are removed in order to prevent seizure.

157

After disassembling the connecting rod cap, slide the pistons in the cylinder paying attention to the correct positioning of the combustion chamber.

Caution - Warning

In order not to damage the seal rings and the contact areas while inserting the piston into the cylinder, use the special piston ring compression tool.

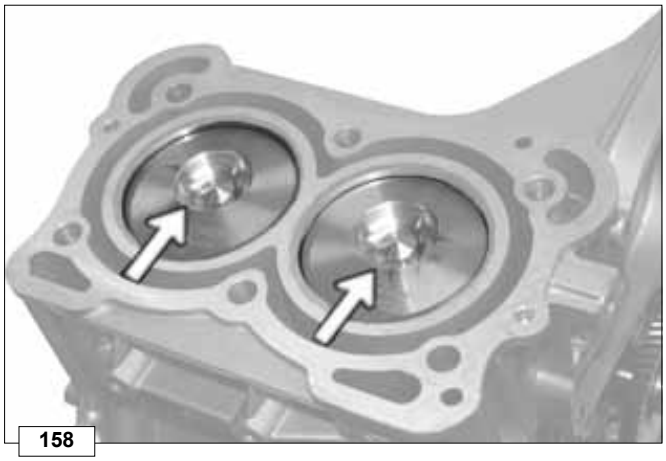
158

The combustion chamber on the piston crown must be positioned so as to have its decentralized part towards the water pump side.

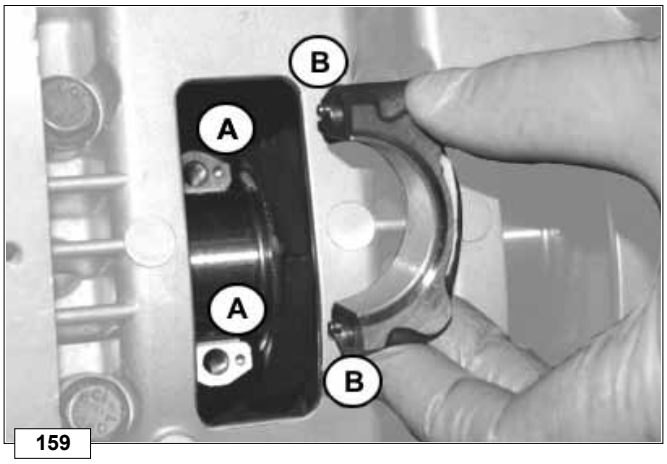

159

CONNECTING ROD CAP

Generously lubricate the connecting rod caps and then assemble them making the two centring pins **B** on the cap coincide with the special holes **A** on the big end.

Caution - Warning

The crankshaft and connecting rod half-bearings are made out of special lead-free material, and hence must strictly be replaced with new ones every time they are removed in order to prevent seizure.

https://truckmanualshub.com/

160

Important
The screws of the connecting rod caps must be tightened in an alternating pattern until reaching the prescribed torque value.

❍ Tighten the screws to a torque of 25 Nm.

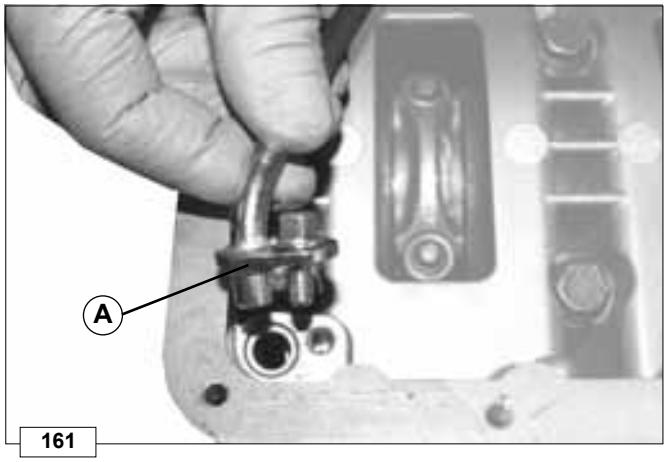

161

OIL SUMP

Oil sump return line from vent system

Important
Always replace the O-ring (A) between the pipe and the lower crankcase any time the pipe is disassembled.

❍ Tighten the screw to a torque of 10 Nm.

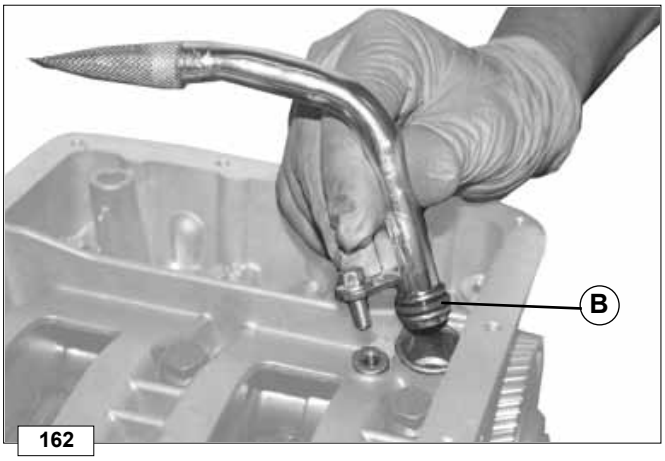

162

OIL SUCTION PIPE

Important
Always replace the O-ring (A) between the pipe and the lower crankcase any time the pipe is disassembled.

❍ Tighten the screw to a torque of 10 Nm.

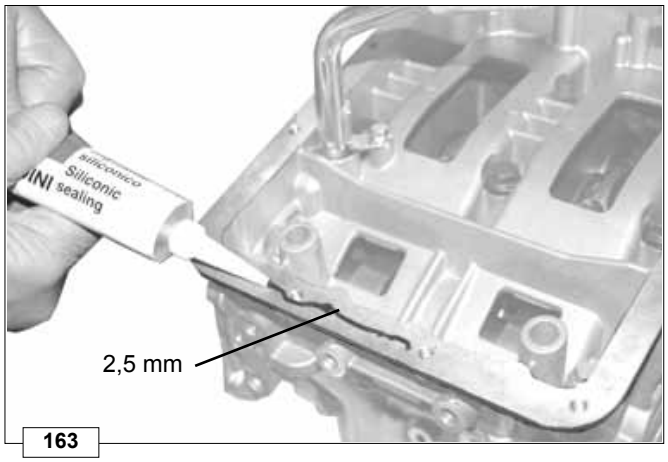

163

To seal the oil sump surface, apply a bead of silicone liquid sealant on the lower crankcase surface (p/n 4776.100 spare part.).
The diameter of the sealant bead must be approx. 2.5 mm.

Caution - Warning
An excessive application of sealant may obstruct the passages of the lubrication channels.

https://truckmanualshub.com/

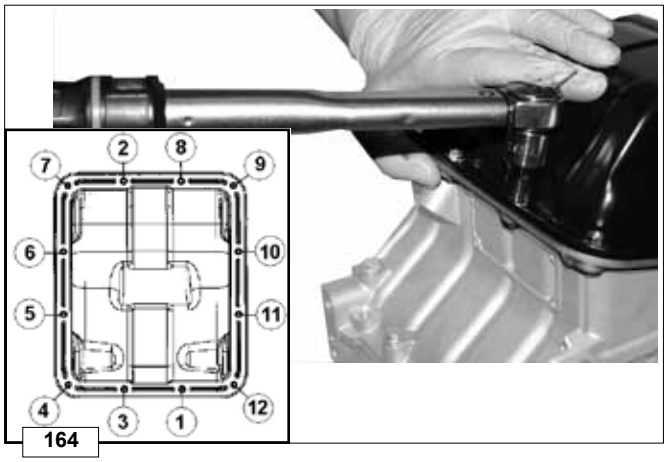

164

Tighten the oil sump screws following the prescribed order, to avoid the risk of deformation and oil leakages in the future.

❍ Tighten the screws to a torque of 10 Nm.

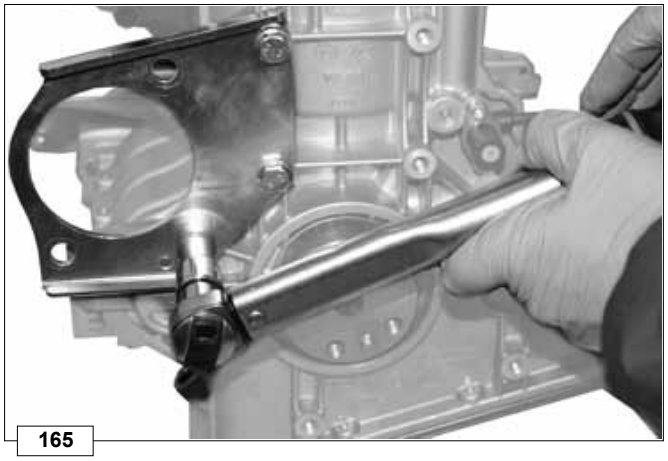
165

STARTER MOTOR SUPPORT PLATE

Reassemble the starter motor support plate.

❍ Tighten the screws to a torque of 25 Nm.

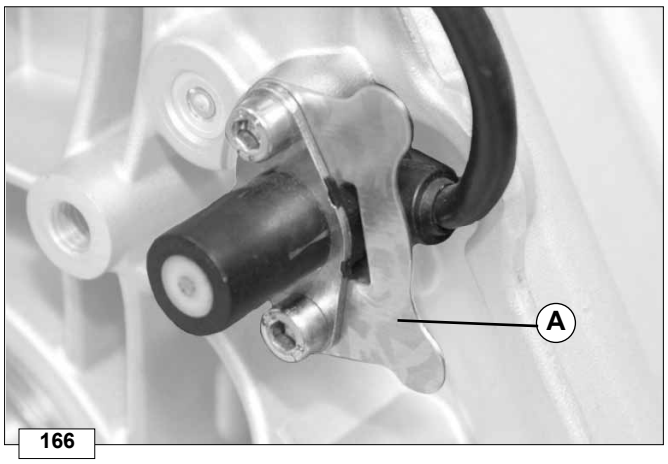

166

SPEED SENSOR

It reads the signal provided by the phonic wheel (60 - 2 teeth) integrated in the flywheel.
The shim **A** allows modifying the air gap (0.25 ÷ 1.10) between the sensor and the phonic wheel, by means of 0.5 mm shims.

167

❍ Tighten the screws to a torque of 6 Nm.

https://truckmanualshub.com/

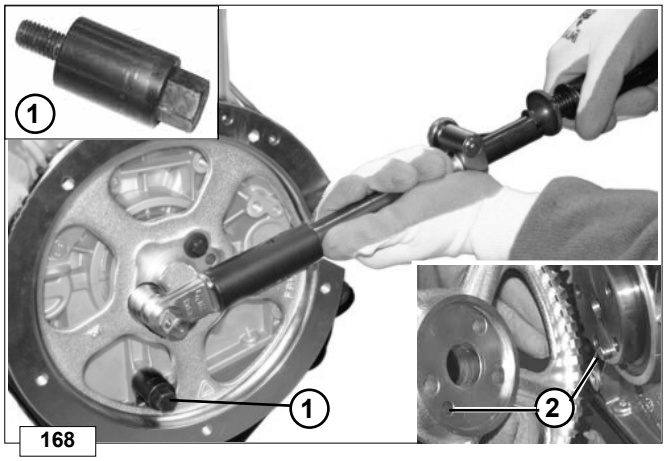

168

FLYWHEEL

Assemble the flywheel on the crankshaft by making the cylindrical pin **2** coincide with the hole on the flywheel, then install the fastening screws without tightening them.
Insert the special tool **1** p/n 1460.301 in the threaded hole on the crankcase to secure the crankshaft against rotation.

❍ Tighten the screws to a torque of 85 Nm.

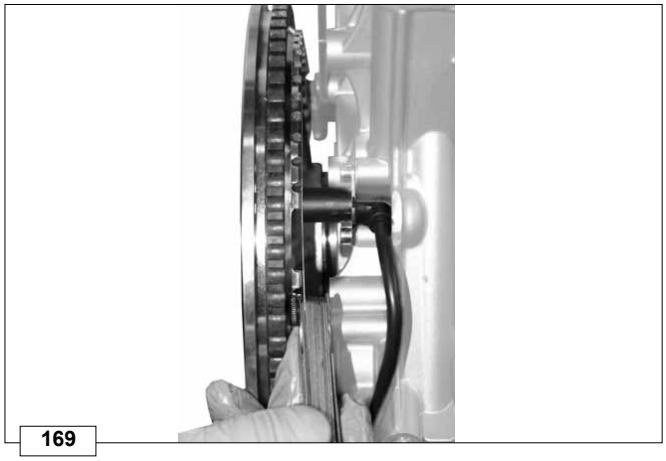
169

SPEED SENSOR - Air gap

Use a thickness gauge to check that the air gap between the speed sensor and the phonic wheel is correct (0.25÷1.10).
To set the correct air gap, add or remove 0.5 mm shims.

170

CLEARANCE VOLUME

Position the pistons at the top dead centre.
Measure the distance from the piston crown to the crankcase surface in four diametrically opposite points.
Repeat the operation on all pistons.
The maximum measured value determines the value (**A**).
According to the measured value, choose the most suitable gasket.
This choice determines the value of the clearance volume (see "Head gasket selection and clearance volume table").

Important
The head gasket must be replaced every time it is disassembled.

Head gasket selection and clearance volume table

A (mm)	Number of holes		Clearance volume (mm)
0,280÷0,380	1	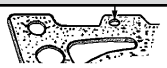	0,340÷0,440
0,381÷0,480	2	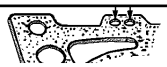	0,340÷0,439
0,481÷0,580	3	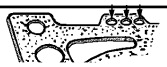	
0,581÷0,680	4	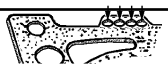	

https://truckmanualshub.com/

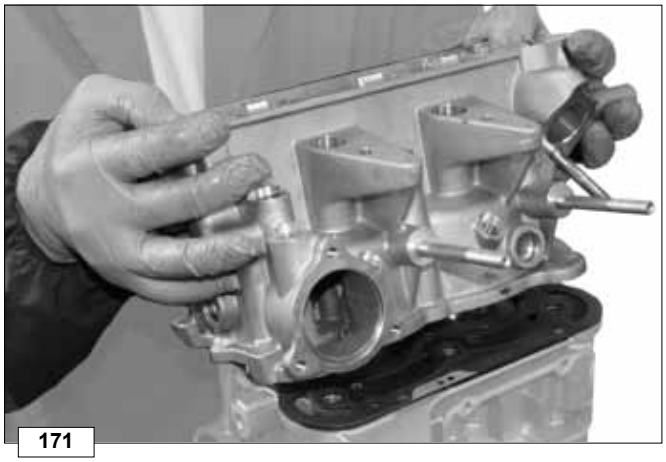

171

CYLINDER HEAD

Assemble the cylinder head by referring to the centring pins and without applying a particular pressure.

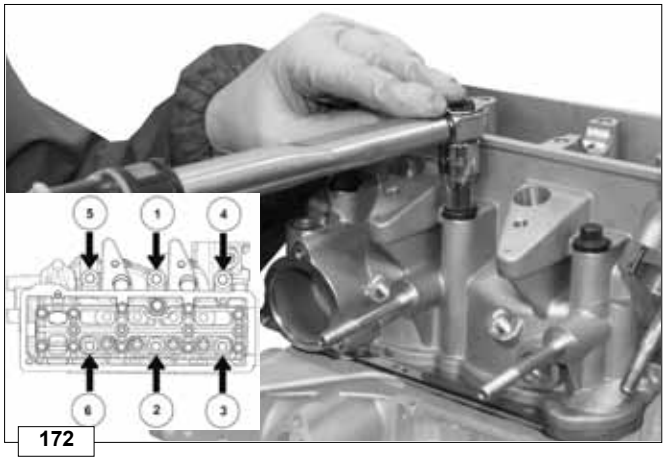

172

Important

The cylinder head fastening bolts must be replaced at each disassembly.

Tighten the cylinder head screws by strictly following the tightening order specified below.

Phase 1: Install the screws without tightening them.
Phase 2: Tighten the screws to 10 Nm following the specified order.
Phase 3: Tighten the screws to 30 Nm following the specified order.
Phase 4: Loosen the screws by 180°.
Phase 5: Tighten the screws to 30 Nm following the specified order.
Phase 6: Tighten the screws to 50 Nm following the specified order.
Phase 7: Tighten by rotating them by 90°, in the specified order.
Phase 8: Tighten then tighten again by 90° following the specified order.

173

ROCKER ARMS AND HYDRAULIC TAPPETS

Reassemble the rocker arm and the hydraulic tappet. Make sure they are fully inserted.

https://truckmanualshub.com/

174

CAMSHAFT

Important

Position the pistons at the top dead centre.

Generously lubricate the bearings and cams, then assemble the shaft in the cylinder head.

➲ For the dimensional checks, refer to page 96.

175

CAMSHAFT COVER

Generously lubricate the bearings.
Assemble the upper camshaft bearing on the cylinder head, by referring to the centring pins as shown by the arrows.

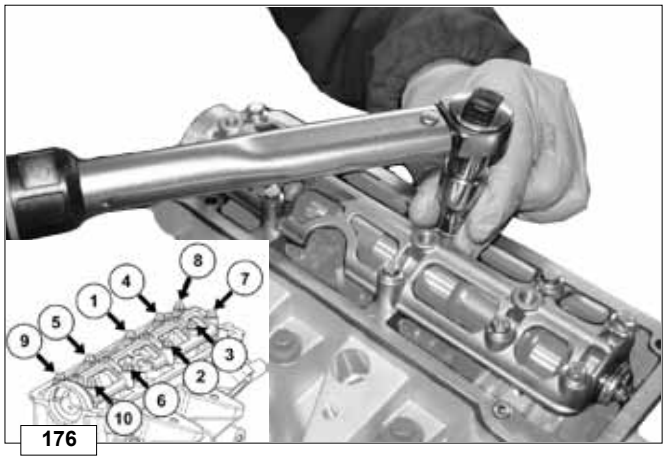

176

Important

Assemble the upper camshaft bearing with care, since the hydraulic tappets may provoke a collision between valves and pistons, if the latter are at their top dead centre.
Before fastening, bring the crankshaft to its BDC.

Do not apply immediately the prescribed torque. Tighten the screws gradually and following the specified order.
This procedure will give time to the oil in the tappets to drain away.

Important

In case of breakage or deformation of the camshaft cover, replace the whole cylinder head.

❍ Tighten the screws to a torque of 10 Nm.

Important

After correctly tightening all the screws, wait at least 30 minutes before starting the engine at an ambient temperature of 20°C.
Before starting the engine, manually rotate the crankshaft to check that the valves do not collide with the pistons.

https://truckmanualshub.com/

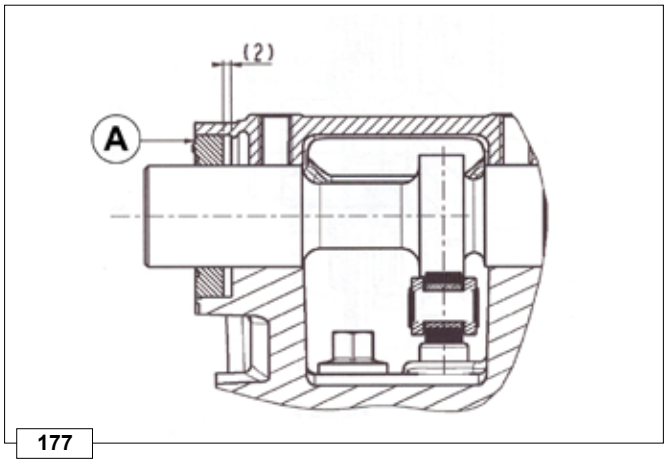

177

SEAL RINGS

Camshaft:

Install the seal ring **A** after generously lubricating it. Set the external surface of the ring coplanar with the surface of the centring hub.
If the seal ring is worn out, the new oil seal ring must be installed by moving it towards the bottom of the support, so that the seal lip is moved by 1 mm from its previous position (first replacement of the seal ring).
At the second replacement of the seal ring, it must be installed by pushing it fully to the bottom.
The clearance available to move the seal ring from its original position to the bottom position is 2 mm.

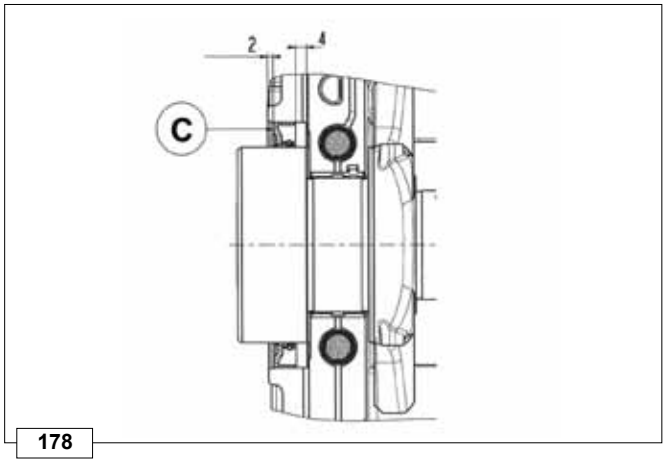

178

Crankshaft (flywheel side):

Install the seal ring **C** after generously lubricating it. Set the external surface of the ring aligned with the end of the chamfered opening. Respect the 2 mm indentation value with respect to the crankcase surface.
If the seal ring is worn out, the new oil seal ring must be installed by moving it towards the bottom of the support, so that the seal lip is moved by 1 mm from its previous position (first replacement of the seal ring).
In case the seal ring is replaced again, it must be installed further in by 1 mm with respect to the previous time (second replacement of the seal ring).

179

WATER PUMP

Before reassembling the water pump, apply a layer of silicone sealant 7091 on the crankcase surface (matr. 4776.100).

Important
Never apply an excess of sealant near the rotor to avoid pump overheating.

180

Tighten the screws in a criss-cross pattern.

❍ Tighten the screws to a torque of 10 Nm.

https://truckmanualshub.com/

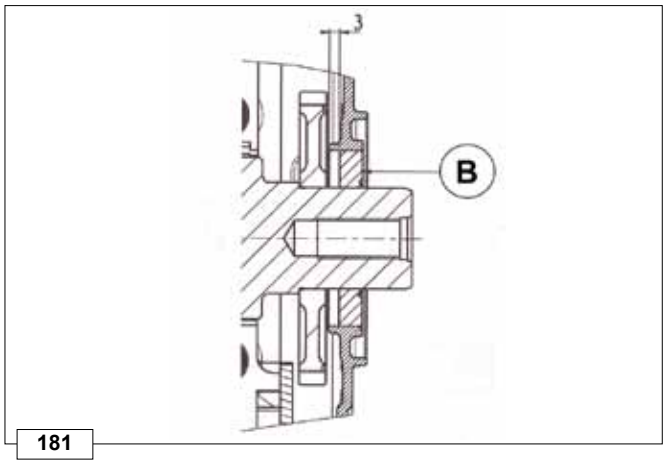

181

Crankshaft seal rings (timing system side):

Install the seal ring **B** after generously lubricating it. Set the external surface of the ring coplanar with the surface of the centring hub.
If the seal ring is worn out, the new oil seal ring must be installed by moving it towards the bottom of the support, so that the seal lip is moved by 1 mm from its previous position (first replacement of the seal ring).
In case the seal ring is replaced again, it must be installed further in by 1 mm with respect to the previous time (second replacement of the seal ring).
Do not move back the seal ring by more than 3 mm, since no mechanical limit stop is provided to ensure the correct operation of the ring.

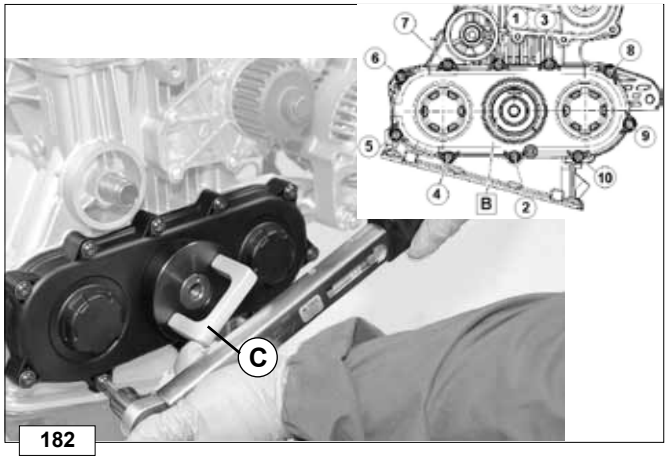

182

GEAR COVER

Caution - Warning

When assembling the cover, pay particular attention not to damage the oil seal ring B (fig.181) on the crankshaft.

Use the special tool **C** p/n 1466.299 to centre the gear cover on the crankshaft.
Tighten the screws of the gear cover, by following the specified order, at a torque of 10 Nm.

Important

The slightest non compliance with the specified tightening order may result in deformations of the oil seal ring B.

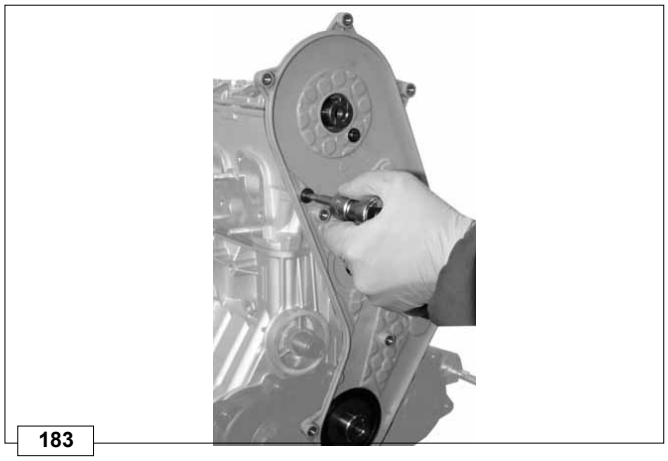

183

Internal timing belt guard

Assemble the internal timing belt guard and tighten the screws in a criss-cross pattern.

❍ Tighten the screws to a torque of 10 Nm.

184

TIGHTENING PULLEY

Assemble the tightening pulley without tightening the screws to their final torque.

https://truckmanualshub.com/

185

TOOTHED PULLEY ON CAMSHAFT

Important

Assemble the pulley on the camshaft by making the reference key 2 coincide with its slot 3 in the pulley.

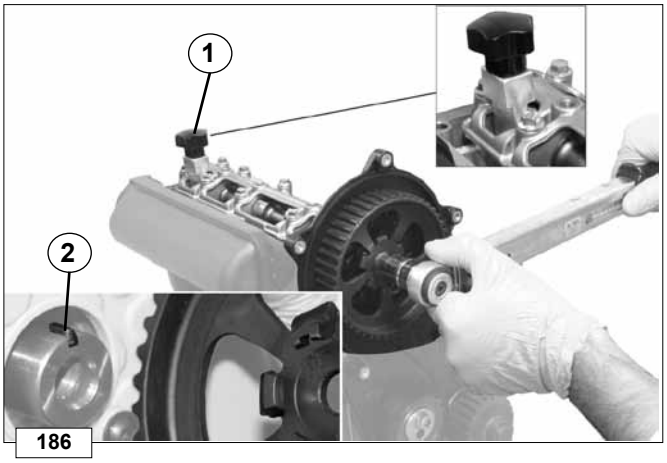

186

Fit the special tool p/n 1460.300 to lock the camshaft.

❍ Tighten the screw to a torque of 80 Nm.

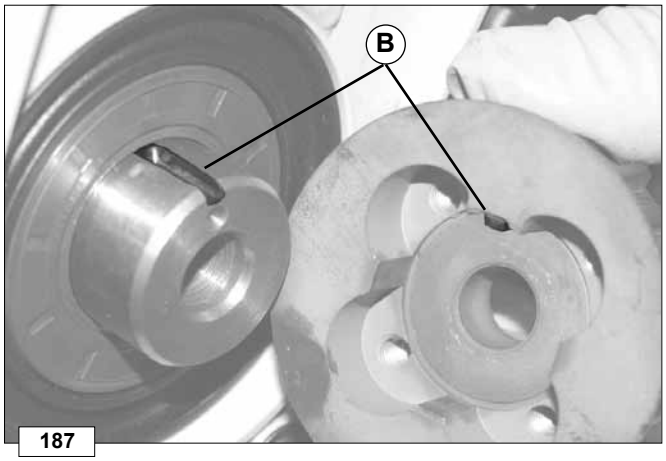

187

TIMING SYSTEM DRIVE PULLEY

Install the timing system drive pulley on the crankshaft by inserting the key **B** of the gear in the slot **B** of the crankshaft.

188

Secure the crankshaft against rotation using the tool **1**, see fig.168.

❍ Tighten the screw to a torque of 85 Nm.

Remove the flywheel locking tool **1** (fig.168).

https://truckmanualshub.com/

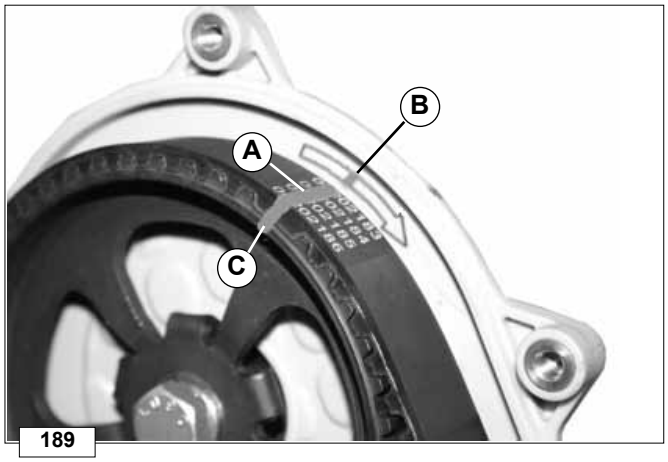

189

TIMING BELT SETTING

Important

Every time the belt is disassembled it must be replaced even if it has not reached the prescribed time for replacement.

Install the belt by aligning the belt references **A** with the corresponding references on the timing system internal guard **B** and with the references on the camshaft pulley **C** and crankshaft gear **D**.

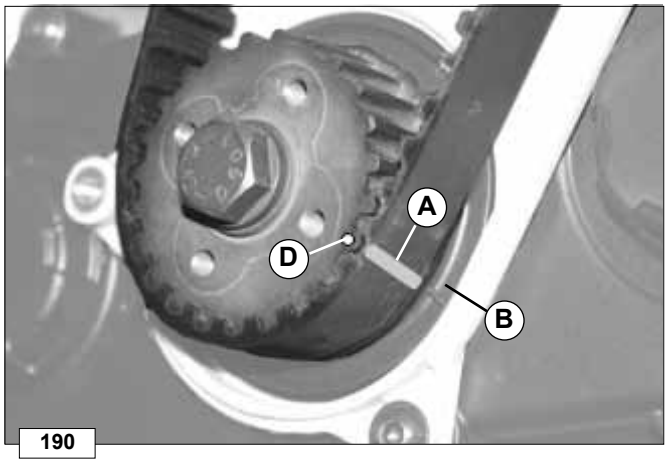

190

The timing system pulley on the crankshaft is correctly timed when the engraving on the tooth is aligned with the mark on the timing belt internal guard (in plastic) as shown at point **B**.

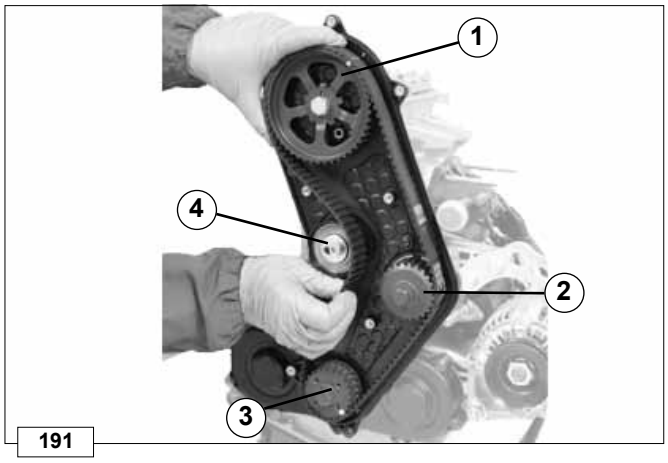

191

SYNCHRONOUS TIMING BELT ASSEMBLY

Important

Remove the belt from its protective wrapping only when ready for fitting.

Install the belt respecting the rotation direction shown by the arrow on the belt itself.
Make the toothed belt references coincide with the ones on the pulleys of the camshaft **1** and crankshaft **3**.
As last, insert the belt in the tightening pulley **4**.

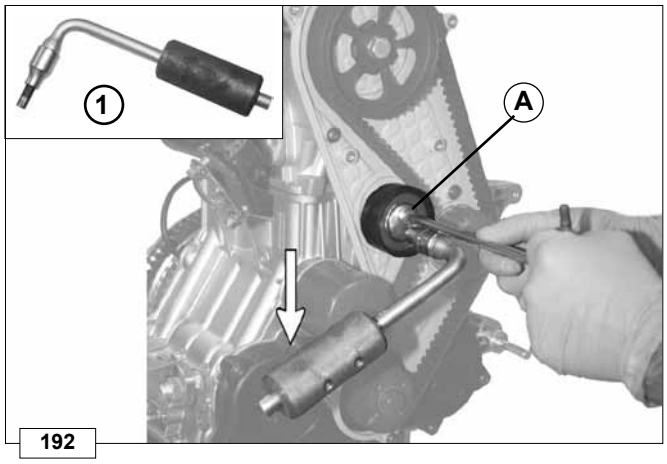

192

SYNCHRONOUS TIMING BELT - Tensioning

Insert the special tool **1** (p/n 1460.325) in the hexagonal hole of the tightening pulley as shown in the figure.
By exerting a force on the tightening pulley, the tool makes it rotate anticlockwise, thus correctly tensioning the timing belt.
Tighten the pulley fastening screw **A** to a torque of 25 Nm without completely tightening it.
Remove the belt tensioning tool **1**

https://truckmanualshub.com/

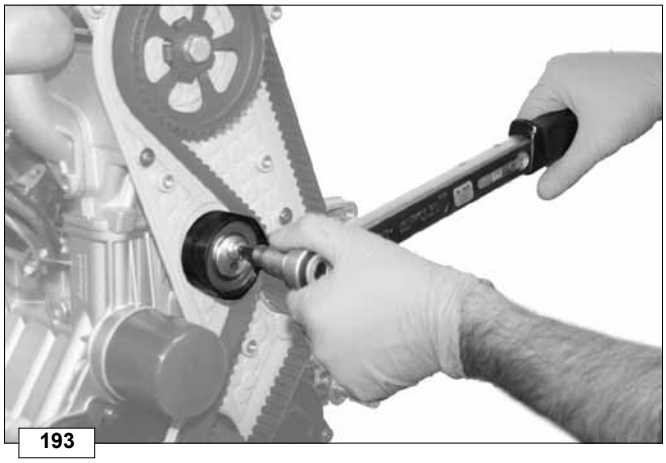
193

❍ Tighten the screw to a torque of 25 Nm.

Manually rotate the crankshaft some times and repeat the tensioning procedures.

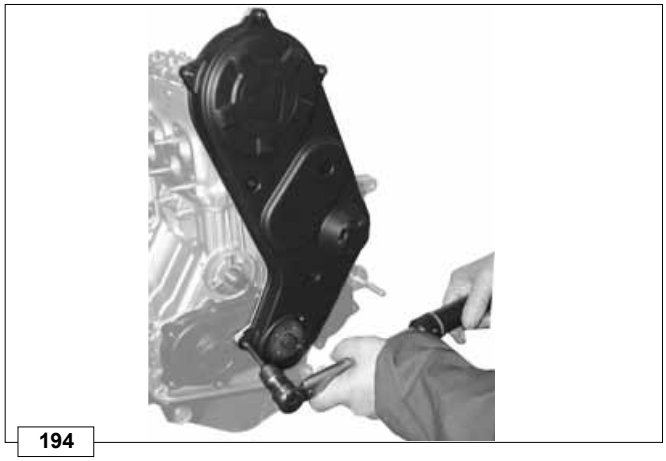
194

EXTERNAL TIMING BELT GUARD

Reassemble the external timing belt guard.

❍ Tighten the screws to a torque of 10 Nm.

195

ALTERNATOR DRIVE PULLEY

Install the pulley on the crankshaft and fasten it.

❍ Tighten the screws to a torque of 10 Nm.

196

OIL FILTER

Lubricate the rubber seal with engine oil and screw the oil filter back in.

Important
It is compulsory to screw the oil filter manually.

https://truckmanualshub.com/

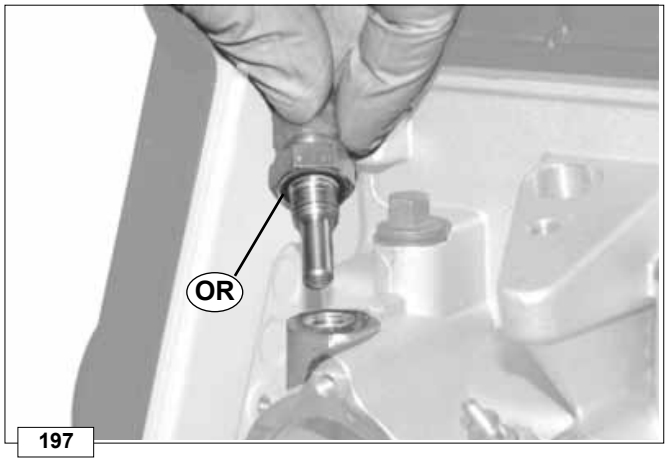

197

WATER TEMPERATURE SENSOR

Important
Always replace the O-ring.

Manually screw the temperature sensor on the cylinder head.

❍ Tighten the sensor to a torque of 20 Nm.

➲ For the technical specifications see page 47.

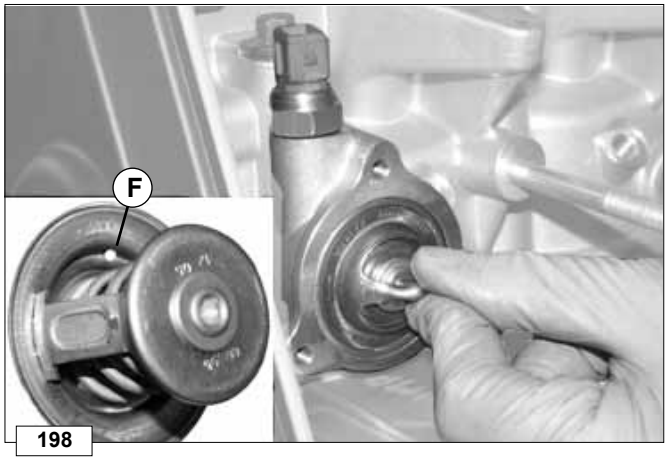

198

THERMOSTATIC VALVE

Important
The air bleeding hole F must be turned upwards.

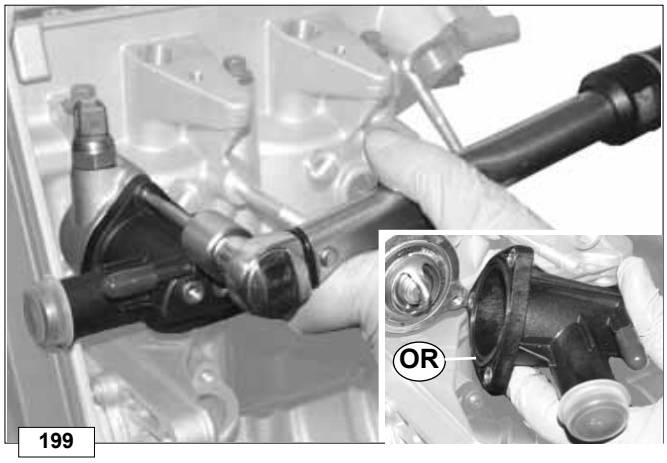

199

COOLANT OUTLET FLANGE

Important
Always replace the O-ring.

❍ Tighten the screws to a torque of 10 Nm.

200

COOLANT INLET FLANGE

Reassemble the coolant inlet flange on the engine with the duct fitting.

❍ Tighten the screws to a torque of 10 Nm.

https://truckmanualshub.com/

201

GLOW PLUGS

Important

The glow plugs must be tightened using a torque wrench only.

❍ Tighten the glow plugs to a torque of 15 Nm.

The glow plugs do not have a limit stop in the cylinder head. Therefore, an incorrect tightening may result in serious head damages (see on page 49) and could modify the glow plug protrusion value in the combustion chamber.

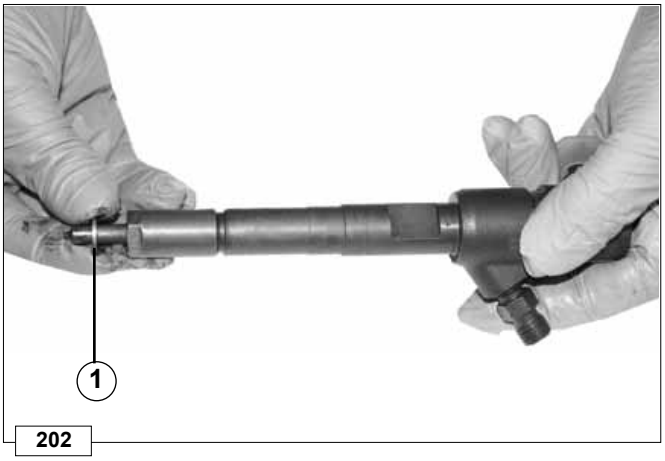

202

ELECTRONIC INJECTORS

Important

Always replace the copper gasket 1 before reassembly.

The copper gasket **1** determines the nozzle protrusion from the combustion chamber.

The effective dimensional check is to be carried out with the cylinder head disassembled, by measuring the protrusion of the nozzle tip from the cylinder head surface (see page 123).

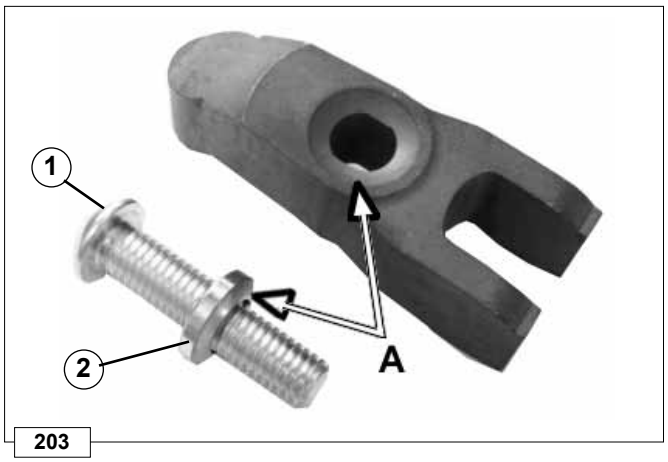

203

ELECTRONIC INJECTOR FIXING BRACKET

Important

During the reassembly phase, always replace the screw 1 and the washer 2.

The washer has an assembly direction. The tapered surface **A** must be in contact with the tapered surface of the bracket **A**.

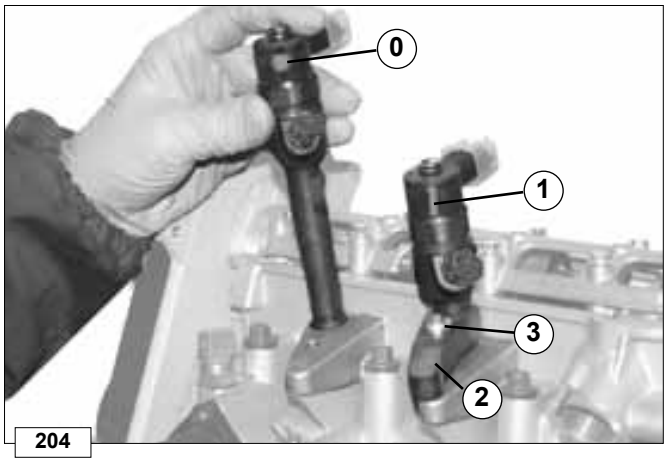

204

Insert the injector with its seal.
Assemble the fixing bracket **2**.
Partially screw the fastening screw **3** without tightening it, paying attention to the assembly direction of the tapered washer.
Repeat the same operation on the second injector.

Important

Reassemble the injector and/or delivery hoses paying attention to the references on the injector and fuel delivery hoses (0 and 1, see photo) marked during disassembly.
If the position of the electronic injectors is changed, the ECU will not detect the expected IMA codes. This will result in poor engine performances.

https://truckmanualshub.com/

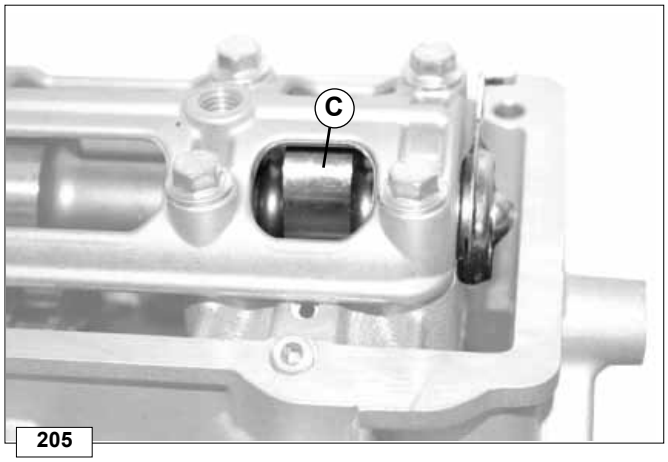

205

HIGH-PRESSURE PUMP

Position the cam **C** that controls the high-pressure pump on its base radius.

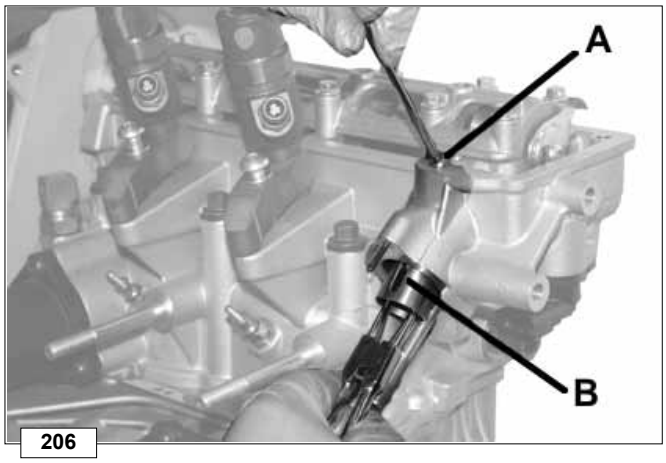

206

Loosen the screw **A** and introduce the tappet in the cylinder head, with the slot **B** aligned with the screw **A**.
When the tappet roller comes in contact with the cam, tighten the screw **A**.
To check if the tappet has been correctly assembled, it must not rotate and allow a limited downstroke.

207

Apply a layer of grease (which acts as a sealant in this case) on the high-pressure pump collar.
Insert the pad with its concave section turned towards the cam.
To determine the pad thickness, see page 98.

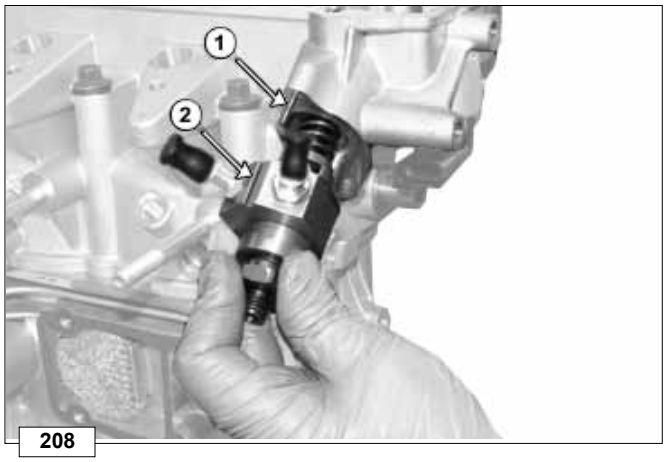

208

Important

During the reassembly phase, the pin 1 must be inserted in the positioning slot 2.

Install the high-pressure pump in the cylinder head.

Important

To avoid damaging the injection system, remove the protection plugs only a moment before connecting to the fittings.

https://truckmanualshub.com/

209

Assemble the bracket that fixes the pump to the cylinder head.

Important
Insert the spherical washer respecting the assembly direction and tighten the fastening nut to a torque of 25 Nm.

210

COMMON RAIL

Insert the two fixing columns on the stud bolts.

211

Important
Assemble the Common Rail and screw in the fixing columns without tightening them.

Important
To avoid damaging the injection system, remove the protection plugs only a moment before connecting to the fittings.

212

HIGH-PRESSURE LINES

Important
Assemble the high-pressure lines by manually screwing the fittings, without tightening them.

Important
To avoid damaging the injection system, remove the protection plugs only a moment before connecting to the fittings.

https://truckmanualshub.com/

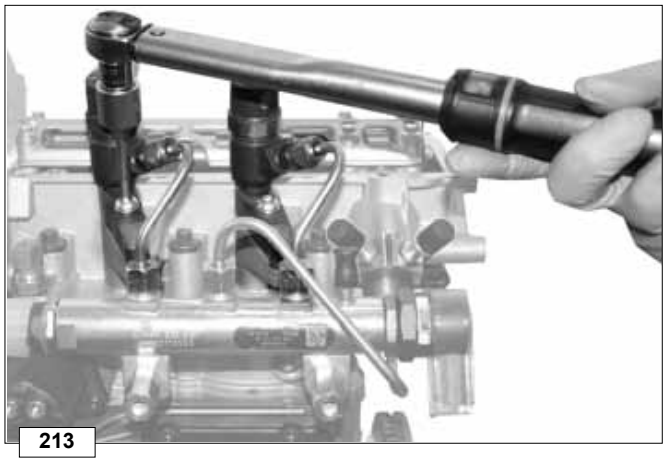
213

ELECTRONIC INJECTORS - Tightening

❍ Tighten the screw to a torque of 22 Nm.

214

COMMON RAIL FIXING COLUMNS - Tightening

❍ Tighten the columns to a torque of 25 Nm.

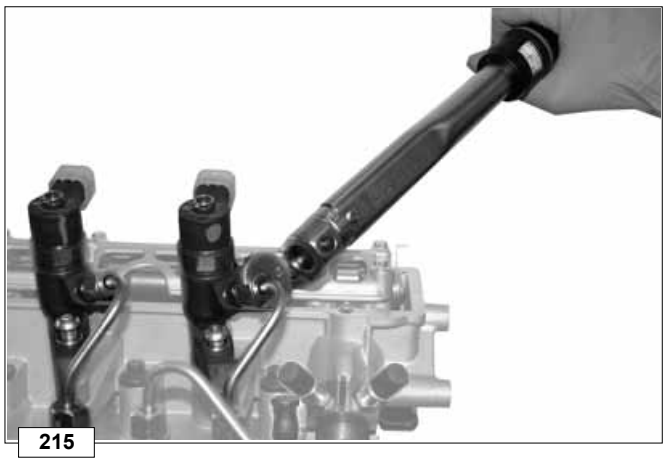
215

INJECTOR FITTINGS - Tightening

Tighten the injectors fittings in sequence.

❍ Tighten the fittings to a torque of 19 Nm.

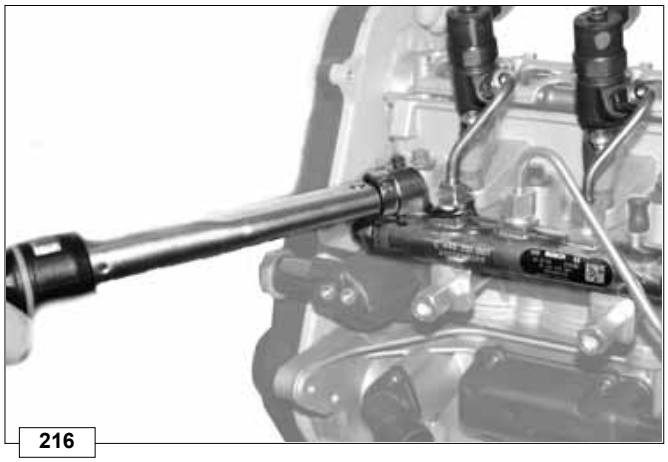
216

INJECTION HOSE FITTINGS ON RAIL AND INJECTION PUMP HOSE - Tightening

❍ Tighten the fittings to a torque of 19 Nm.

https://truckmanualshub.com/

217

FUEL HOSES

Assemble the fuel distributor.

❍ Tighten the screws to a torque of 19 Nm.

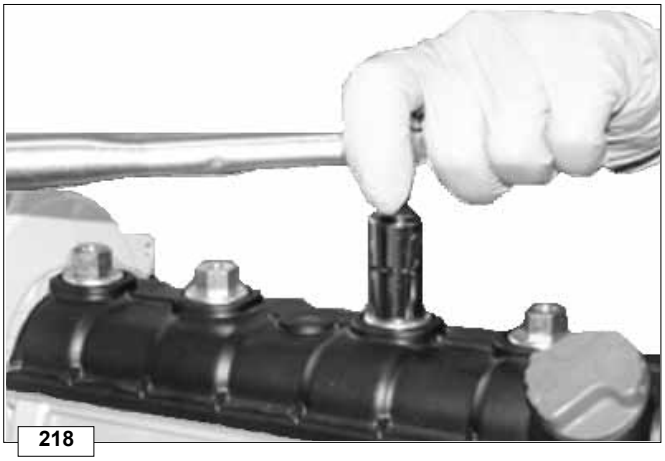
218

ROCKER ARM COVER

Important
Before reassembling the rocker arm cover, always replace the silicone seal between the cylinder head and the cover.

Tighten the screws in a progressive way, starting from the central screws and then proceeding with the external ones.

❍ Tighten the bolts to a torque of 22 Nm.

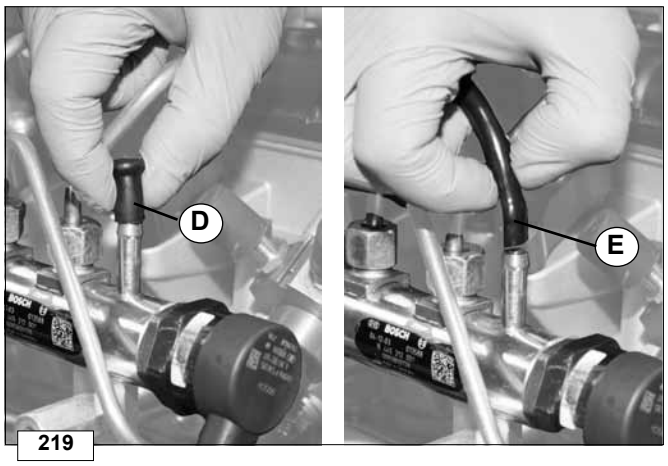

219

RAIL

Remove the plug **D** and fit the hose **E** on the Rail discharge fitting.

Important
To avoid damaging the injection system, remove the protection plugs only a moment before connecting to the fittings.

https://truckmanualshub.com/

220

Remove the protection plugs **C** from the inlet/outlet fittings of the high-pressure pump.

221

Connect the high-pressure pump return hose by exerting a small pressure on the quick-coupling and check that it is correctly fitted.

222

Connect the supply hose by exerting a small pressure on the quick-coupling and check that it is correctly fitted.

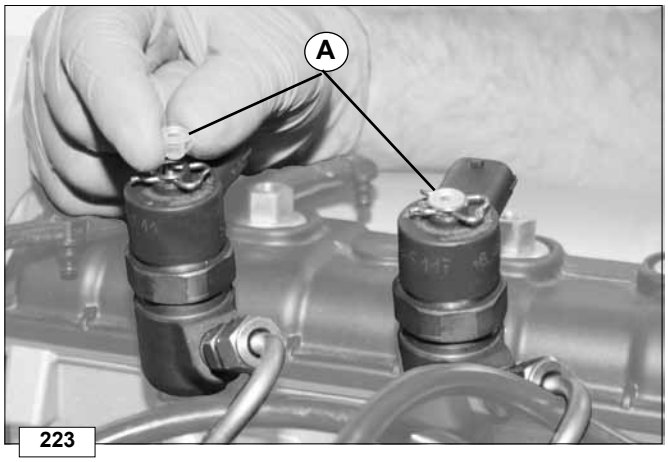

223

Remove the protection plugs **A** from the injector return fittings.

https://truckmanualshub.com/

224

INJECTOR RETURN LINE

Manually fit the injector return hose on the fitting by pressing from above and pushing vertically until hearing the lock click.
Stop pushing as soon as you have reached the limit stop.

225

Use a plastic hose clamp to secure the return hose to the other supply hoses, to avoid interferences with the acoustic insulation cover.

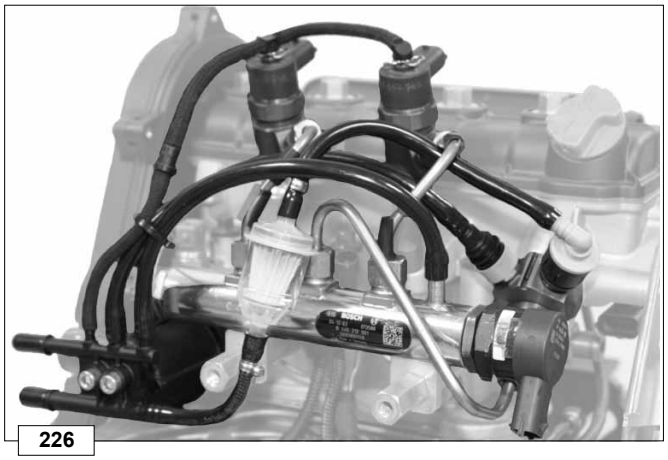
226

Position the safety filter as shown in the figure.

Caution - Warning

Do not position the filter in a different position to avoid problems to the supply system.

227

STARTER MOTOR

Insert the starter motor in the supporting plate.

❍ Tighten the bolts to a torque of 45 Nm.

https://truckmanualshub.com/

228

ALTERNATOR

Fix the alternator support bracket to the crankcase.

❍ Tighten the screws to a torque of 25 Nm.

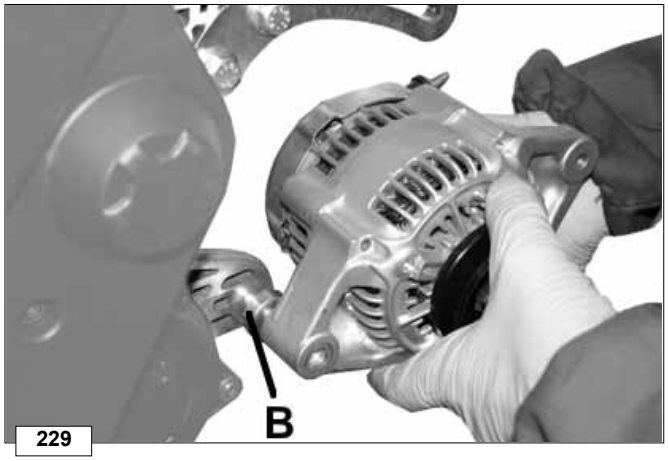

229

Introduce the spacer **B** on the stud bolt that supports the alternator in the lower part, and then fix the alternator to the upper bracket..

230

ALTERNATOR DRIVE BELT

Fit the alternator drive belt on the two pulleys.

231

Tension the belt by pressing on the alternator.

❍ Tighten the bracket screw to a torque of 45 Nm.
❍ Tighten the screw in the lower part to a torque of 25 Nm.

https://truckmanualshub.com/

232

After manually performing some complete rotations of the crankshaft, use a special tool (**Krikit**-type) to check the belt tension. When applying a force of 100 Nm on the belt section shown in the figure, the arrow should be 10-15 mm.
Using the special tool (**Krikit**-type) approved by Lombardini, the correct tension value should be 20÷25 kg.
Should the tensioning be incorrect, repeat the operation.

233

INLET MANIFOLD

Important
Before reassembling the manifold, always replace the gaskets between cylinder head and manifold.

Reassemble the manifold and the heat protection.

❍ Tighten the screws to a torque of 25 Nm.

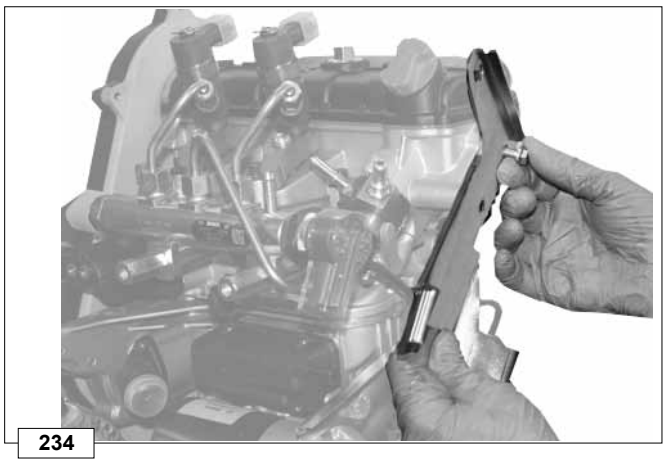
234

AIR FILTER SUPPORT BRACKET

Assemble the air filter support.

❍ Tighten the screws to a torque of 25 Nm.

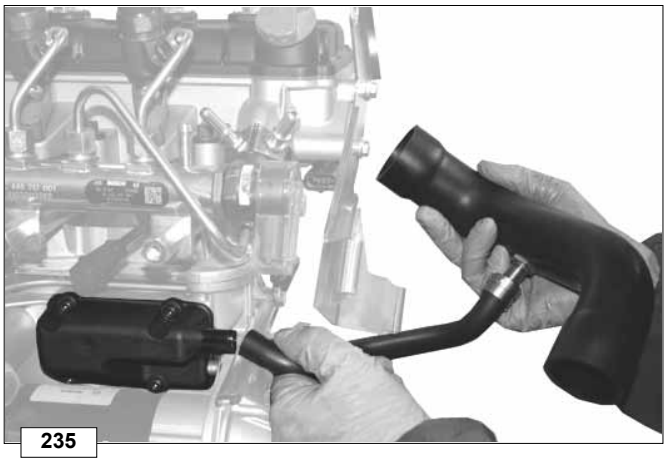
235

AIR FILTER DUCT - VENT DUCT

Reassemble the intake duct together with the oil vapours vent duct.

Important
Always replace the clamps when reassembling.

https://truckmanualshub.com/

236

AIR FILTER

Fasten the rubber clamp that fixes the air filter to the support.

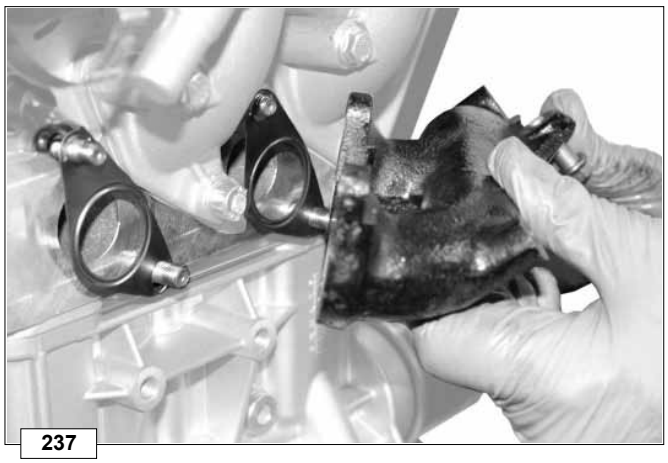

237

EXHAUST MANIFOLD

Important

Before reassembling the manifold, always replace the copper self-locking nuts and the metal gaskets between the manifold and the cylinder head.

Reassemble the exhaust manifold and install the four nuts.

❍ Tighten the nuts to a torque of 25 Nm.

238

SERVICE WIRING HARNESS - INSTALLATION

1. Install the accessory wiring harness (see page 38-39 for the wiring diagram).

239

2. Connect the black connector (**MOT**) to the 50 of the starter motor.

https://truckmanualshub.com/

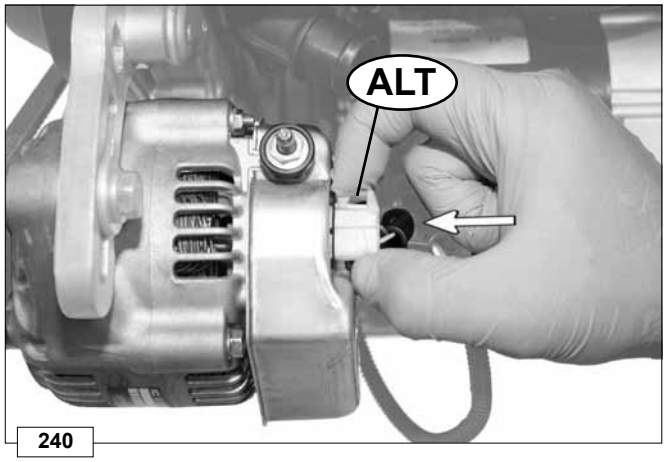

240

3. Connect the connector (**ALT**) to the alternator.

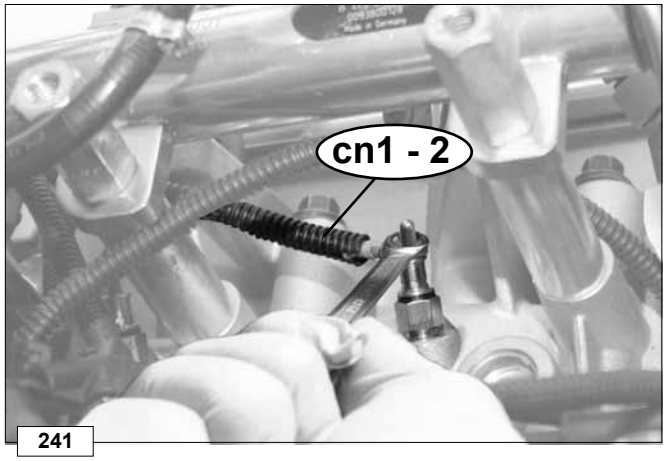

241

4. Connect the glow plug supply cables **cn 1** and **cn 2** to the mating glow plugs.

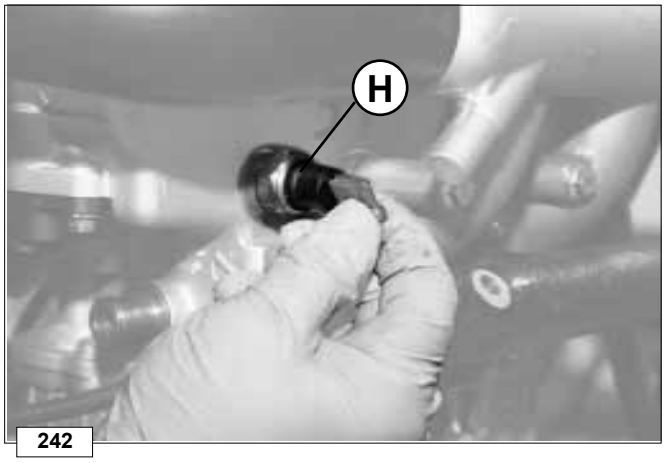

242

5. Connect the oil pressure connector **H** to the oil pressure sensor.

6. Connector **V** must be connected to the mating connector on the engine wiring harness.

7. Connector **G** must be connected to the gearbox speed sensor.

243

ENGINE WIRING HARNESS - INSTALLATION

1. Install the accessory wiring harness (see page 40-41 for the wiring diagram).

https://truckmanualshub.com/

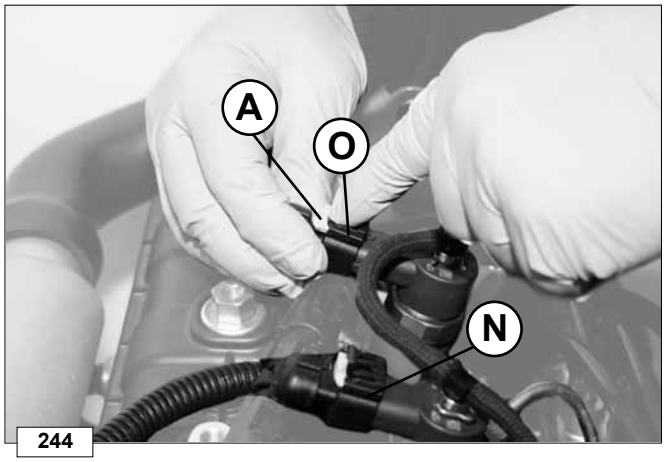

244

1. Connect the connectors **O** and **N** to the mating electronic injectors.

Important

Respect the original position: the engine will not work if the connectors are changed.

2. Lock the connectors by fully engaging the yellow securing lever **A**.

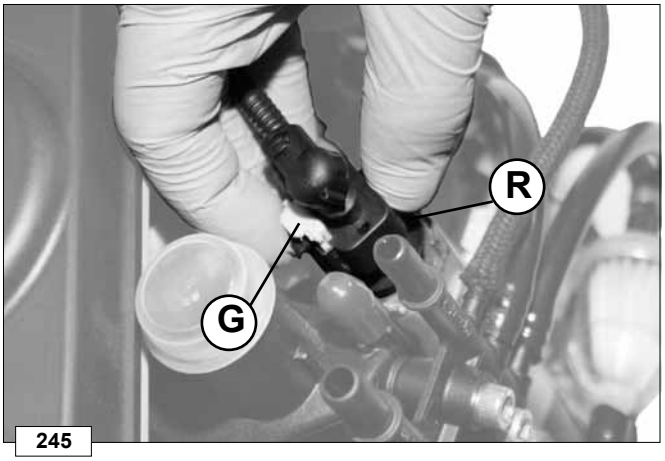

245

3. Connect the connector **R** to the Rail pressure sensor.

4. Lock the connector by fully engaging the yellow securing lever **G**.

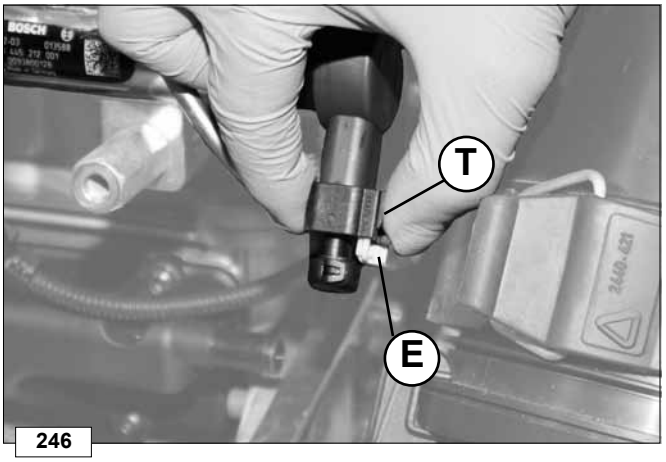

246

5. Connect the connector **T** to the Rail pressure regulator.

6. Lock the connector by fully engaging the yellow securing lever **E**.

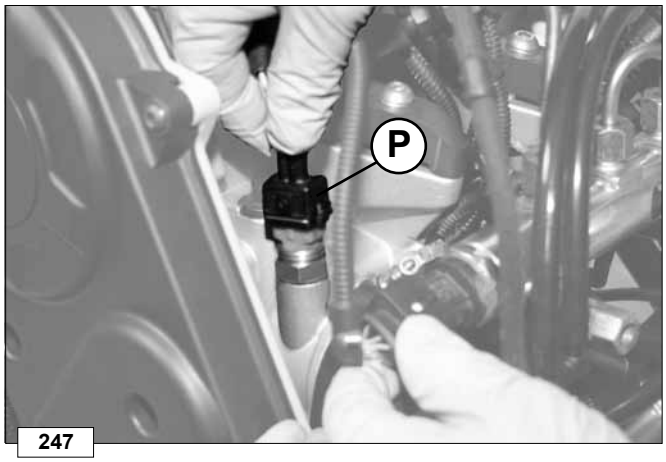

247

7. Connect the connector **P** to the coolant temperature sensor.

8. Fully push downwards the connector until the lock spring is correctly engaged.

https://truckmanualshub.com/

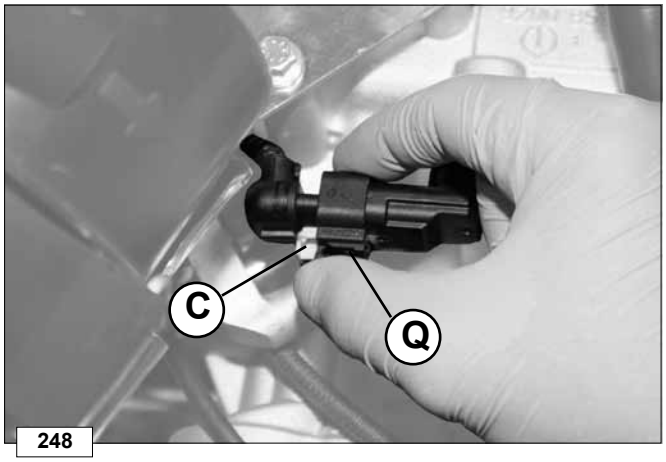

248

9. Connect the phase connector **Q** to the phase sensor located under the cylinder head, flywheel side.

10. Lock the connectors by fully engaging the yellow securing lever **C**.

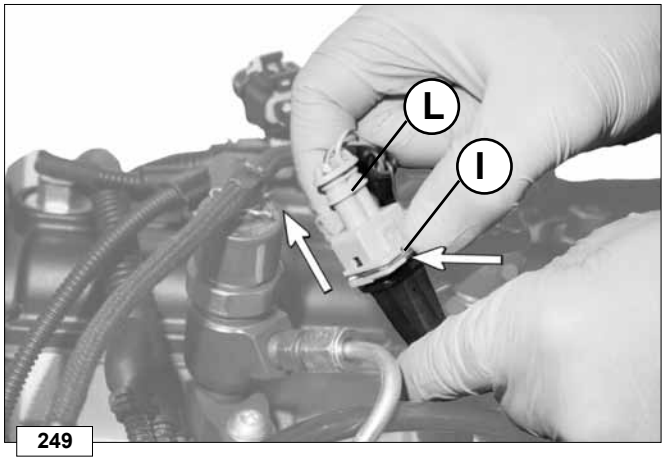

249

11. Connect the connector **L** to the mating cable of the speed sensor.

12. Make sure the lock spring **I** is correctly engaged.

250

13. Connect the alternator control connector.

251

Reassemble the acoustic insulation cover.

https://truckmanualshub.com/

https://truckmanualshub.com/

TIGHTENING TORQUE TABLES

The tables show the tightening torques for standard screws and the main components.

Tightening torques are provided again, along with method and sequence, in the instructions for assembling components and/or assemblies

Table of tightening torques for standard screws (coarse thread)

Resistance class (R)								
Quality/ Dimensions	4.6	4.8	5.6	5.8	6.8	8.8	10.9	12.9
Diameter	R>400N/mm²		R>500N/mm²		R>600N/mm²	R>800N/mm²	R>1000N/mm²	R>1200N/mm²
	Nm	Nm	Nm	Nm	Nm	Nm	Nm	Nm
M3	0,5	0,7	0,6	0,9	1	1,4	1,9	2,3
M4	1,1	1,5	1,4	1,8	2,2	2,9	4,1	4,9
M5	2,3	3	2,8	3,8	4,5	6	8,5	10
M6	3,8	5	4,7	6,3	7,5	10	14	17
M8	9,4	13	12	16	19	25	35	41
M10	18	25	23	31	37	49	69	83
M12	32	43	40	54	65	86	120	145
M14	51	68	63	84	101	135	190	230
M16	79	105	98	131	158	210	295	355
M18	109	145	135	181	218	290	405	485
M20	154	205	193	256	308	410	580	690
M22	206	275	260	344	413	550	780	930
M24	266	355	333	444	533	710	1000	1200
M27	394	525	500	656	788	1050	1500	1800
M30	544	725	680	906	1088	1450	2000	2400

Table of tightening torques for standard screws (fine thread)

Resistance class (R)								
Quality/ Dimensions	4.6	4.8	5.6	5.8	6.8	8.8	10.9	12.9
Diameter	R>400N/mm²		R>500N/mm²		R>600N/mm²	R>800N/mm²	R>1000N/mm²	R>1200N/mm²
	Nm	Nm	Nm	Nm	Nm	Nm	Nm	Nm
M 8x1	10	14	13	17	20	27	38	45
M 10x1	21	28	26	35	42	56	79	95
M 10x1,25	20	26	24	33	39	52	73	88
M 12x1,25	36	48	45	59	71	95	135	160
M 12x1,5	38	45	42	56	68	90	125	150
M 14x1,5	56	75	70	94	113	150	210	250
M 16x1,5	84	113	105	141	169	225	315	380
M 18x1,5	122	163	153	203	244	325	460	550
M 18x2	117	157	147	196	235	313	440	530
M 20x1,5	173	230	213	288	345	460	640	770
M 20x2	164	218	204	273	327	436	615	740
M 22x1,5	229	305	287	381	458	610	860	1050
M 24x2	293	390	367	488	585	780	1100	1300
M 27x2	431	575	533	719	863	1150	1600	1950
M 30x2	600	800	750	1000	1200	1600	2250	2700

https://truckmanualshub.com/

Table with tightening torques of the main components and use of sealant

Description	Diam. x pitch (mm)	Torque (Nm)	*Sealant*
Alternator (lower fastening nut)	M 10x1,5	45	
Alternator (upper fastening screw)	M 8	25	
Lower crankcase, sealing surface			Loctite 5450
Speed sensor wiring harness	M 8	20	
Glow plugs	M 10x1	15	
Connecting rod cap	M 7x1	25	
Engine block	M 10x1,5	50	Loctite 5205
Engine block	M 8	25	Loctite 5205
Engine block	M6	10	Loctite 5205
Starter motor/Alternator connecting cable	M6	6	
Glow plug connection nut	M4	1,5	
Cable on starter motor	M 8	10	
Inlet manifold	M 8	25	
Exhaust manifold	M8	25	
Rocker arm cover	M8	22	
Acoustic insulation cover	M 8	12	
Gear cover	M 6	10	
Decanting device cover	M 6	10	
Cover for glow plug connection cable	M 4	4	
Oil sump	M 6	10	
Fuel distributor	M6	10	
Oil filter	M20x1,5	hand tight	
Coolant inlet flange	M6	10	
Timing belt tightening pulley	M8	25	
Injector fixing bracket	M8	22	
Phase sensor indicator on camshaft	M6	10	
Starter motor on support plate	M10x1,25	45	
Starter motor support plate	M8	25	
Coolant pump	M6	10	
High-pressure pump fixing bracket	M8	25	
Oil pump	M6	10	
Pressure switch	M12x1,5	25	
Exhaust manifold stud bolt	M8	8	Loctite 242
Rail fixing stud bolt	M8	8	
Injection pump stud bolt	M8	8	Loctite 242
Inlet manifold protection	M8	25	
External timing belt guard	M6	10	
Internal timing belt guard	M6	10	
Alternator drive pulley on crankshaft	M6	10	
Timing system drive pulley on crankshaft	M12x1,25	85	
Camshaft timing pulley	M10x1,25	80	
Injection pump tappet	M6	6	Loctite 270
Oil filter union	M20x1,5	15	
Rail fixing	M8	25	
Fuel inlet union on injector body		27	
Phase sensor	M6	10	
Speed sensor	M5	6	
Water temperature sensor	M12x1,5	20	
Engine anchoring bracket	M10	50	

https://truckmanualshub.com/

Description	Diam. x pitch (mm)	Torque (Nm)	*Sealant*
Air filter bracket	M8	25	
Alternator support upper bracket	M8	25	
Camshaft bearing	M6	10	Loctite 5205
Camshaft cover support	M6	10	
Oil sump plug	M18	35	
Water thermostat	M6	10	
Cylinder head	M10	50Nm+90°+90°	
High-pressure lines from rail to injectors	M14x1	19	
High-pressure lines from pump to rail	M12x1,5	28	
Oil suction pipe	M6	10	
Oil return line	M6	10	
Pressure relief valve	M12x1,5	15	
Left balance shaft gear fastening screw	M10x1,25	60	
Flywheel	M10x1,25	85	

https://truckmanualshub.com/

	Description	Part number
	Camshaft seal ring protection sleeve	**1460.319**
	Protection sleeve for assembling the gear cover oil seal ring	**1460.296**
	Instrument for checking the protrusion of pistons, injectors and glow plugs	**1460.298**
	Gear cover centring tool	**1460.299**
	Camshaft locking tool	**1460.323**
	Flywheel locking tool	**1460.301**
	Timing belt tensioning tool	**1460.325**
	Tool for intake and exhaust valve guide seal assembly	**1460.047**
	Diagnostic tool	**1460.322**

https://truckmanualshub.com/

https://truckmanualshub.com/

New diagnosis

Diagnosis
Service
Configuration

New diagnosis
Recent diagnosis
Start OBD
Demo

Select the type of application: Automotive or Marine

Automotive | Marine

Select the type of application: Petrol or Diesel fuel

Automotive
Petrol | Automotive
Diesel

Automotive
Diesel
Lombardini

Automotive
Diesel
LOMBARDINI
ENGINE ELECTRONICS
LDW 442 CRS
--
6JF L3
08-

Automotive
Diesel
LOMBARDINI
ENGINE ELECTRONICS
Switch on the control panel

ENTER to continue

Parameters
Statuses
Information
Errors
Delete errors
Activations

Now we are inside the diagnostic system.

See "Diagnosis Menu"

https://truckmanualshub.com/

Diagnostic Menu - Diagnosis

Parameters. It allows displaying all the engine functional parameters. 8 parameters are displayed for each page. To modify the set of parameters to be displayed, select them using the selection arrows. To access the additional information of the selected parameters, press the diamond key.

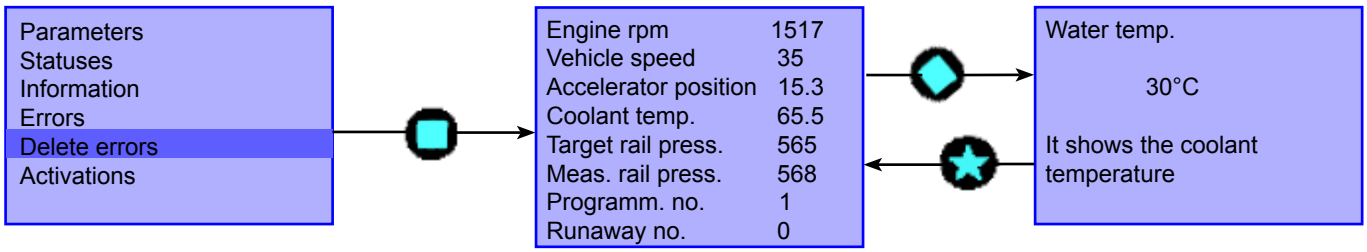

Statuses It allows displaying the status of the actuators and relays

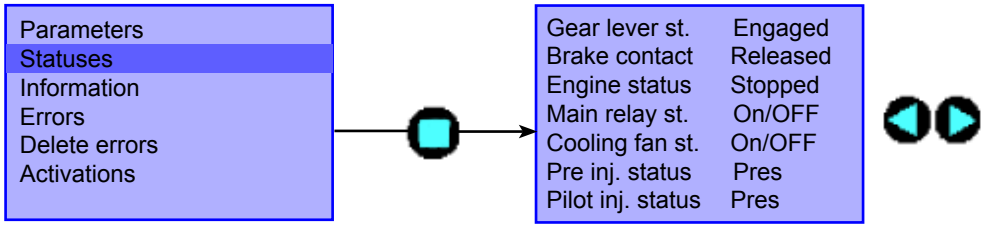

Both in the parameter and the status menu, use the arrow keys to scroll the list of the displayed items.

Information It provides information concerning the programming of the ECU and the codes of the injector delivery class stored in the ECU

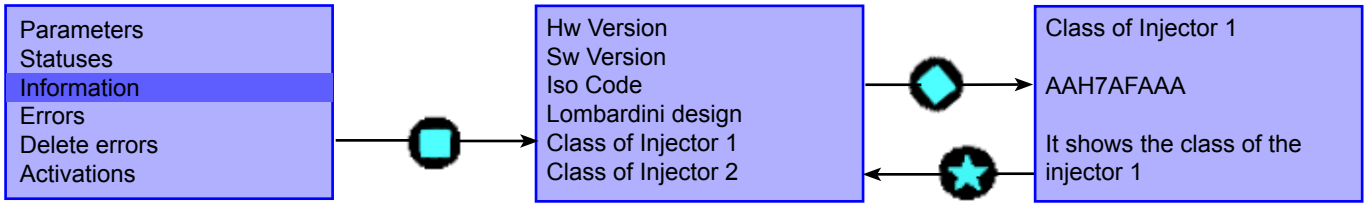

Errors It lists the errors present and/or stored in the ECU, provides the description of the error and of its cause and suggests the checks to be carried out.

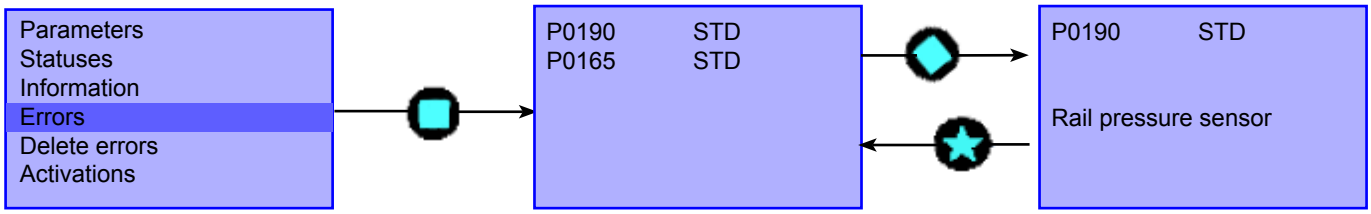

Delete errors It allows deleting all the errors stored in the ECU

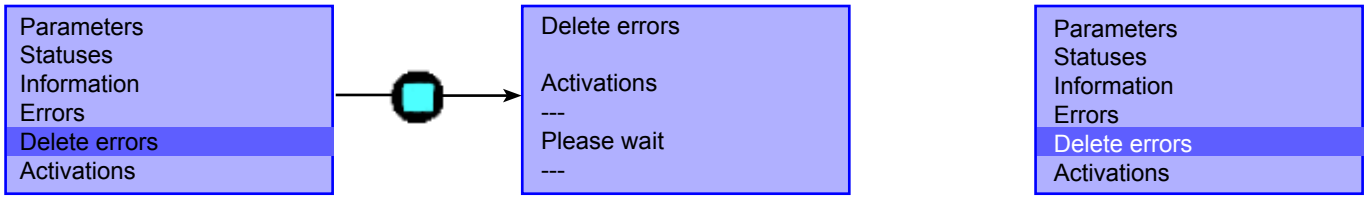

Activations It allows storing the injector delivery class codes in the ECU

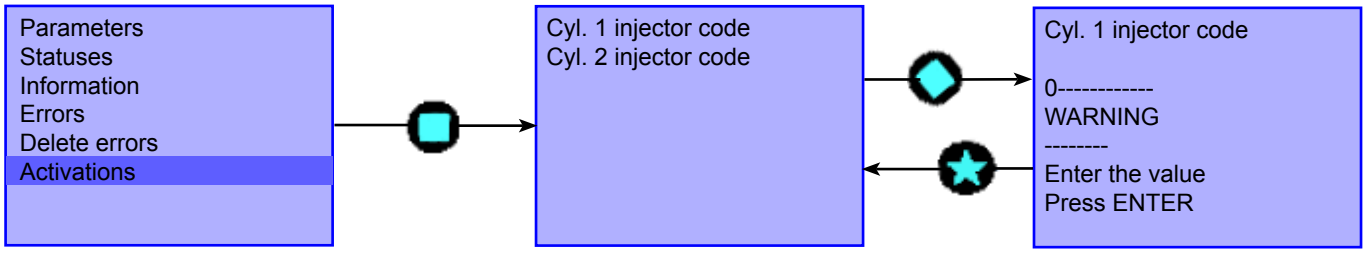

https://truckmanualshub.com/

Database menu – Recent diagnosis

New diagnosis
Recent diagnosis
Start OBD

Automotive
Diesel
ENGINE ELECTRONICS

1

Automotive
Diesel
Lombardini
ENGINE ELECTRONICS
Switch on the control panel

ENTER to continue

Parameters
Statuses
Information
Errors
Delete errors
Activations

Database menu – Start OBD

It allows accessing the diagnosis, if the ECU is recognized

New diagnosis
Recent diagnosis
Start OBD

Searching for
EOBD control units installed
Please wait

Parameters
Statuses
Information
Errors
Delete errors
Activations

If the ECU is not recognized or in case of problems, the following message will be displayed

No control unit was recognized. Check the connections and press ENTER to search again or EXIT to quit.

https://truckmanualshub.com/

Service Menu

https://truckmanualshub.com/

https://truckmanualshub.com/

https://truckmanualshub.com/

LDW 442 CRS

AUTOMOTIVE

cod. 1-5302-838

La Lombardini si riserva il diritto di modificare in qualunque momento i dati contenuti in questa pubblicazione.
Lombardini se rèserve le droit de modifier, à n'importe quel moment, les données reportées dans cette publication.
Data reported in this issue can be modified at any time by Lombardini.
Lombardini behält sich alle Rechte vor, diese Angabe jederzeit zu verändern.
La Lombardini se reserva el derecho de modificar sin previo aviso los datos de esta publicación.

LOMBARDINI SERVICE
A KOHLER COMPANY

UNI EN ISO 9001 - cert. n° 0446
ISO/TS 16949 - cert. n° 3792

42100 Reggio Emilia – Italia - ITALY
Via Cav. del Lavoro Adelmo Lombardini, 2 - Cas. Post. 1074
Tel. (+39) 0522 3891 - Telex 530003 Motlom I – Telegr.: Lombarmotor
R.E.A. 227083 - Reg. Impr. RE 10875
Cod. fiscale e Partita IVA 01829970357 - CEE Code IT 01829970357

E-MAIL: atlo@lombardini.it
Internet: http://www.lombardini.it