https://truckmanualshub.com/

ELECTRIC FORKLIFT TRUCK
SERIES Z 80/900 H - Z 100 H

8.000Kg/900mm
10.000Kg/600mm
VOLTAGE 96V
HIGH DRIVING POSITION
FOR MAXIMUM
VISIBILITY EVEN WITH
VERY BULKY LOADS
COMPACT SIZE

carer
Electric Forklift Trucks

carer
Electric Forklift Trucks

C.A.R.E.R. Srl
Via Copernico 13
48010 Cotignola (RA) Italia
Tel. +39 0545 1938010
Fax +39 0545 908070
info@carerforklift.com
www.carerforklift.com

https://truckmanualshub.com/

ELECTRIC FORKLIFT TRUCK CARER Z 80/900 H – Z100H

Technical data in accordance with VDI 2198

MAIN FEATURES

CAPACITY 8.000Kg/900mm – 10.000Kg/600mm
VOLTAGE 96V
TYRES DUAL SE
AC MOTORS
MULTIFUNCTION DISPLAY EASY INFO (MDE)
OIL IMMERSED BRAKE
TRAVEL SPEED 15,0 km/h
LIFTING SPEED 0,44 m/s
BATTERY 96V 1500Ah
HIGH TILT CYLINDERS

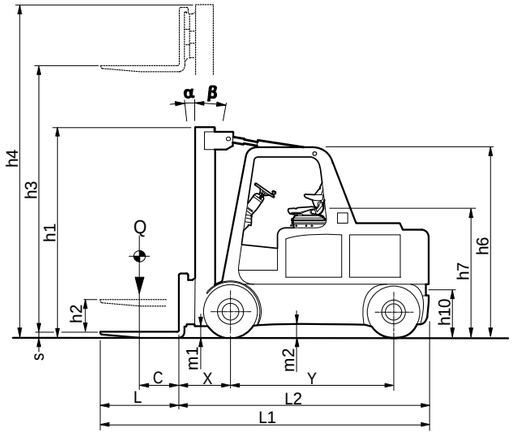

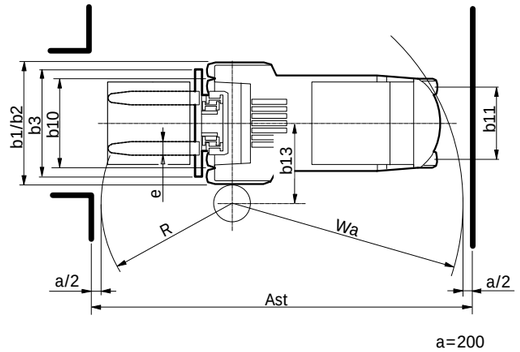

The benefit of choosing Carer

The driver's seat is wide and spacious. The layout of the controls and instruments on board meet the ergonomic sizing. The steering wheel has the tilt steering and is also adjustable in depth.

The wide seat is cushioned, adjustable in each direction and also based on the weight of the operator.
A large handle and two wide steps provide easy access to the driving position.
The front and rear visibility is excellent thanks to the raised driving position, the electronic control MOSFET high frequency ensures low noise and maximum engine performance. The system is protected and is placed in the rear to facilitate easy access during maintenance operations.
The electric motors are developed and designed to support demanding applications and are excited in series with the armature winding in copper strip.
The electric braking energy recovery features to the release of the brake pedal and reversing the direction of travel.

The tilt cylinders provide excellent stability of the mast reducing twists due to their location and large lever arms.

CHARATERISTICS	1,1	Manufacturer		C.A.R.E.R. Srl	C.A.R.E.R Srl
	1,2	Type		Z80@900H	Z100H
	1,3	Power Source: Battery, diesel, gas,electric mains		battery	Battey
	1,4	Operation: manual, pedestrian, stand, seat		seated	seated
	1,5	Load capacity	Q (t)	8,0	10,0
	1,6	Load center	C (mm)	900	600
	1,8	Load distance	X (mm)	680 (1)	720 (1)
	1,9	Wheelbase	Y (mm)	2500	2500
WEIGHTS	2,1	Unladen weight (max.battery)	(kg)	13840	14787
	2,2	Axle loading laden front/rear (max.battery)	(kg)	19777/2063	22688/2099
	2,3	Axle loading unladen front/rear (max.battery)	(kg)	6720/7120	7410/7377
WHEELS AND TYRES	3,1	Tyres: C= cushion, SE= super-elastic, PN= Pneumatic, SEG= dual super-elastic PNG= dual pneumatic, VLK= vulkollan		SEG	SEG
	3,2	Tyre size, front		8.25-15	300-15
	3,3	Tyre size, rear		315/45-12	315/45-12
	3,5	Wheels: Number front / rear (X = driven)		4X/2	4X/2
	3,6	Track width, front, standard/wide tread	b10 (mm)	1393	1486
DIMENSIONS	3,7	Track width, rear	b11 (mm)	1200	1200
	4,1	Mast tilt, forward α / back β	α/β (°)	4/8 (2)	4/8 (2)
	4,2	Height of mast lowered	h1 (mm)	2880	2950
	4,3	Free lift	h2 (mm)	0	0
	4,4	Lift height	h3 (mm)	3400	3400
	4,5	Height of mast extended	h4 (mm)	4780	4850
	4,7	Height to top of overhead guard	h6 (mm)	2650	2650
	4,8	Seat height	h7 (mm)	1635	1635
	4,12	Towing coupling height	h10 (mm)	680	680
	4,19	Overall length	L1 (mm)	5580	5010
	4,20	Length to face of fork	L2 (mm)	3780	3810
	4,21	Overall width, standard / wide tread	b1 (mm)	1838	2020
	4,22	Fork dimensions	exsxL (mm)	200x70x1800	200x80x1200
	4,23	Fork carriage ISO 2328/30, FEM / A, B		5A	5A
	4,24	Fork carriage width	b3 (mm)	1800	1800
	4,31	Ground clearance under mast, laden	m1 (mm)	170	170
	4,32	Ground clearance at center of wheelbase	m2 (mm)	110	110
	4,33	Aisle width with pallets 1000x1200mm wide	Ast (mm)	5165	5210
	4,34	Aisle width with pallets 800x1200mm long	Ast (mm)	5365	5410
	4,35	Outer turning radius	Wa (mm)	3285	3285
PERFORMANCES	4,36	Inner turning radius, standard/wide tread	b13 (mm)	1100	1135
	5,1	Travel speed, with / without load	(km/h)	14,0/15,0	12,5/13,5
	5,2	Lifting speed, with / without load	(m/s)	0,30/0,44	0,25/0,37
	5,3	Lowering speed with / without load	(m/s)	0,50/0,40	0,45/0,038
	5,5	Drawbar pull, with / without load (S2 60 ')	(N)	6400/7200	5800/6500
	5,6	Max drawbar pull, with / without load (S2 5 ')	(N)	15900/16700	14400/15100
	5,7	Gradeability, with / without load (S2 30 ')	(%)	5/9,5	4,5/8,5
	5,8	Max gradeability, with / without load (S2 5 ')	(%)	8/13,5	7,4/12
	5,9	Acceleration time, with / without load (10 m)	(s)	6,2/5,8	5,5/5
MOTORS / BATT.	5,10	Service brake: mech. / Hydraulic / electric		hydr/elect	hydr/elect
	6,1	Drive motor output (S2 60 ')	(kW)	27	27
	6,2	Lifting motor (S3 20%)	(kW)	45	45
	6,4	Battery voltage	U (V)	96	96
	6.4.1	Battery capacity	K5 (Ah)	1380/1500	1380-1500
OTHER	6,5	Battery weight minimum / maximum	(kg)	4300/4500	4300/4500
	8,1	Drive control		inverter	inverter
	8,2	Working pressure for attachments	(bar)	160	160
	8,4	Average noise level at operator's ear	(dBA)	-	-

VDI 2198

(1) With integral side-shift on the mast

(2) Lifting heights > 4.5 m, 3°/ 7°.

The performance data refer to forklift truck in perfect working order, with battery weight corresponding to the values given in 6.5