https://truckmanualshub.com/

WSM

WORKSHOP MANUAL
TRACTOR

L3200

Kubota

KiSC issued 12, 2006 A

https://truckmanualshub.com/

TO THE READER

This Workshop Manual has been prepared to provide servicing personnel with information on the mechanism, service and maintenance of KUBOTA Tractor L3200. It is divided into three parts, “General”, “Mechanism” and “Servicing” for each section.

■ **General**

Information on the tractor identification, the general precautions, maintenance check list, check and maintenance and special tools are described.

■ **Mechanism**

Information on the construction and function are included. This part should be understood before proceeding with troubleshooting, disassembling and servicing.

Refer to Diesel Engine / Tractor Mechanism Workshop Manual (Code No. 97897-01873 / 97897-18200) for the one which has not been described to this workshop manual.

■ **Servicing**

Information on the troubleshooting, servicing specification lists, tightening torque, checking and adjusting, disassembling and assembling and servicing which cover procedures, precautions, factory specifications and allowable limits.

All information illustrations and specifications contained in this manual are based on the latest product information available at the time of publication.

The right is reserved to make changes in all information at any time without notice.

May 2006

© KUBOTA Corporation 2006

KiSC issued 12, 2006 A

https://truckmanualshub.com/

SAFETY FIRST

This symbol, the industry's "Safety Alert Symbol", is used throughout this manual and on labels on the machine itself to warn of the possibility of personal injury. Read these instructions carefully.

It is essential that you read the instructions and safety regulations before you attempt to repair or use this unit.

DANGER : **Indicates an imminently hazardous situation which, if not avoided, will result in death or serious injury.**

WARNING : **Indicates a potentially hazardous situation which, if not avoided, could result in death or serious injury.**

CAUTION : **Indicates a potentially hazardous situation which, if not avoided, may result in minor or moderate injury.**

■ **IMPORTANT** : **Indicates that equipment or property damage could result if instructions are not followed.**

■ **NOTE** : **Gives helpful information.**

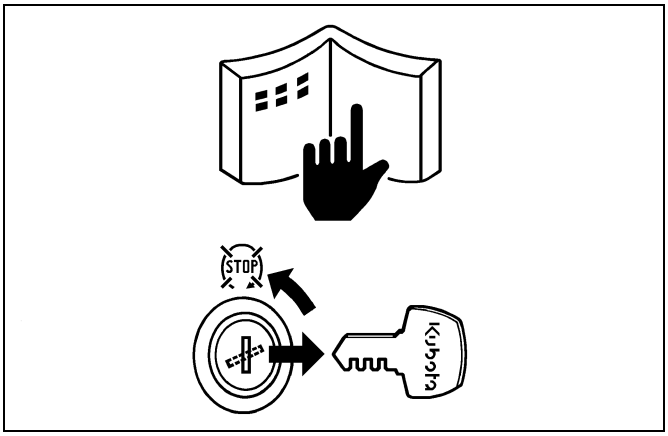

BEFORE SERVICING AND REPAIRING

- Read all instructions including safety instructions in this manual and your machine safety decals.
- Clean the work area and machine.
- Park the machine on firm and level ground, and set the parking brake.
- Lower the implement to the ground.
- Stop the engine, and remove the key.
- Disconnect the battery negative cable.
- Hang a "**DO NOT OPERATE**" label on the operators platform.

https://truckmanualshub.com/

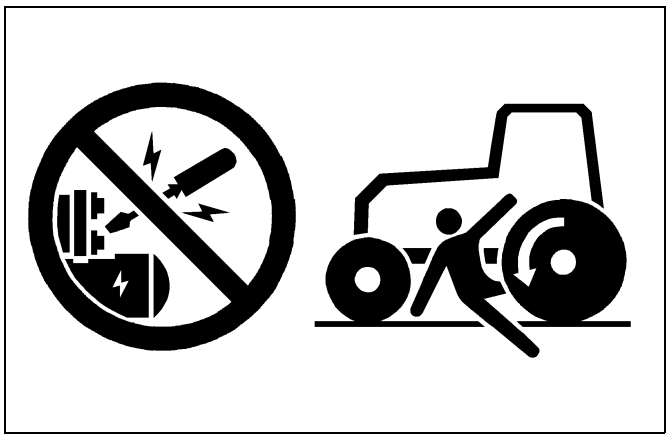

SAFETY STARTING

- Do not start the engine by shorting across starter terminals or bypassing the safety start switch.
- Do not alter or remove any part of machine safety system.
- Before starting the engine, make sure that all shift levers are in neutral positions or in disengaged positions.
- Never start the engine while standing on ground. Start the engine only from operator's seat.

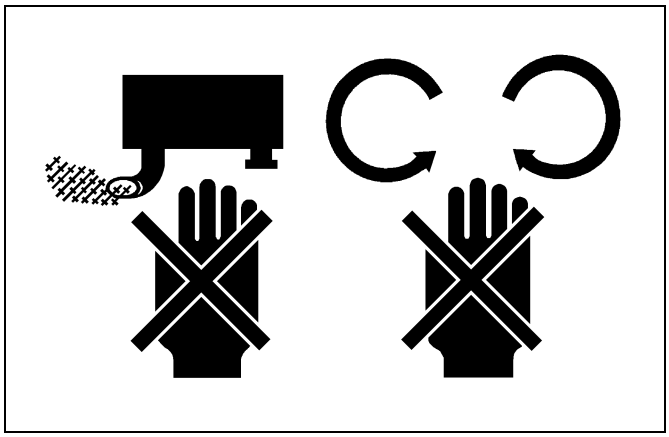

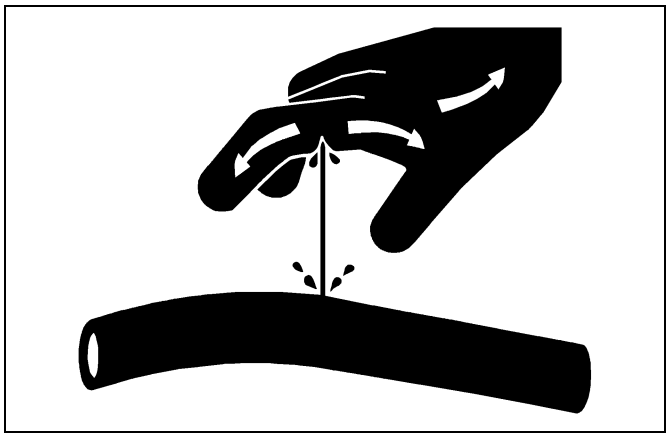

SAFETY WORKING

- Do not work on the machine while under the influence of alcohol, medication, or other substances or while fatigued.
- Wear close fitting clothing and safety equipment appropriate to the job.
- Use tools appropriate to the work. Makeshift tools, parts, and procedures are not recommended.
- When servicing is performed together by two or more persons, take care to perform all work safely.
- Do not work under the machine that is supported solely by a jack. Always support the machine by safety stands.
- Do not touch the rotating or hot parts while the engine is running.
- Never remove the radiator cap while the engine is running, or immediately after stopping. Otherwise, hot water will spout out from radiator. Only remove radiator cap when cool enough to touch with bare hands. Slowly loosen the cap to first stop to relieve pressure before removing completely.
- Escaping fluid (fuel or hydraulic oil) under pressure can penetrate the skin causing serious injury. Relieve pressure before disconnecting hydraulic or fuel lines. Tighten all connections before applying pressure.

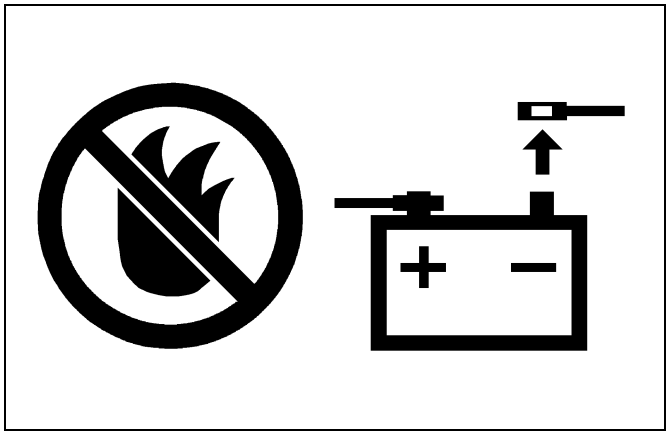

AVOID FIRES

- Fuel is extremely flammable and explosive under certain conditions. Do not smoke or allow flames or sparks in your working area.
- To avoid sparks from an accidental short circuit, always disconnect the battery negative cable first and connect it last.
- Battery gas can explode. Keep sparks and open flame away from the top of battery, especially when charging the battery.
- Make sure that no fuel has been spilled on the engine.

https://truckmanualshub.com/

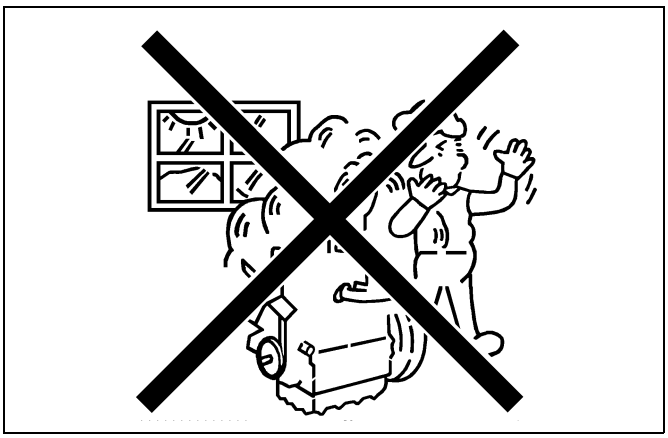

VENTILATE WORK AREA

- If the engine must be running to do some work, make sure the area is well ventilated. Never run the engine in a closed area. The exhaust gas contains poisonous carbon monoxide.

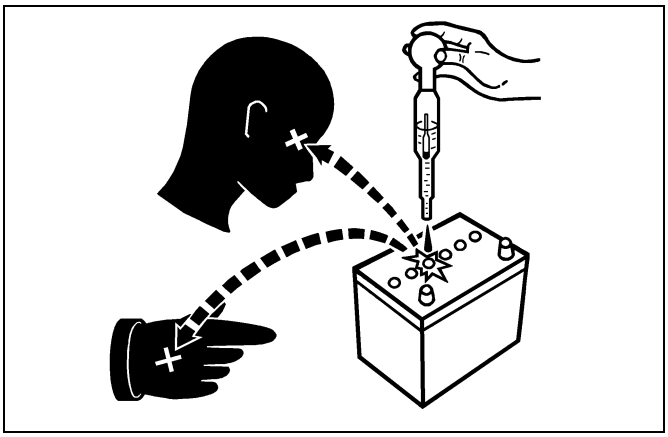

PREVENT ACID BURNS

- Sulfuric acid in battery electrolyte is poisonous. It is strong enough to burn skin, clothing and cause blindness if splashed into eyes. Keep electrolyte away from eyes, hands and clothing. If you spill electrolyte on yourself, flush with water, and get medical attention immediately.

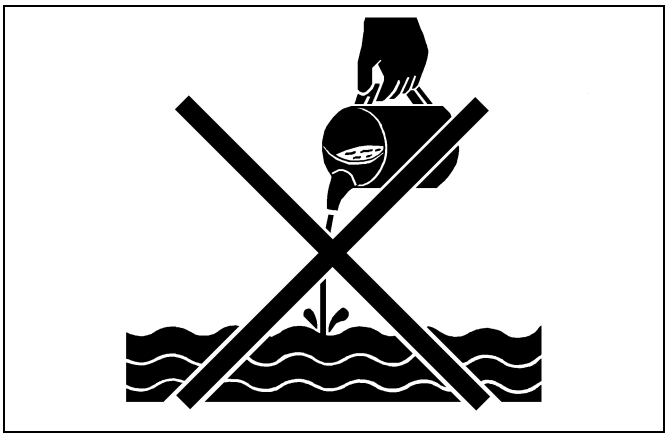

DISPOSE OF FLUIDS PROPERLY

- Do not pour fluids into the ground, down a drain, or into a stream, pond, or lake. Observe relevant environmental protection regulations when disposing of oil, fuel, coolant, electrolyte and other harmful waste.

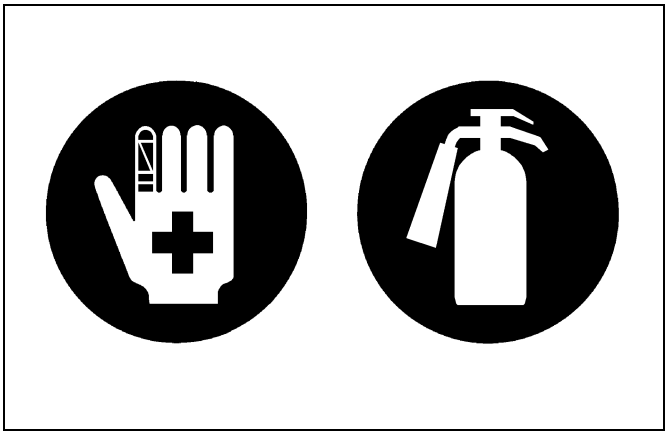

PREPARE FOR EMERGENCIES

- Keep a first aid kit and fire extinguisher handy at all times.
- Keep emergency numbers for doctors, ambulance service, hospital and fire department near your telephone.

https://truckmanualshub.com/

SAFETY DECALS

The following safety decals are installed on the machine.
If a decal becomes damaged, illegible or is not on the machine, replace it. The decal part number is listed in the parts list.

[Rear Mount Type ROPS] **(For France, Germany, United Kingdom)**

(1) Part No. 3A111-9848-2

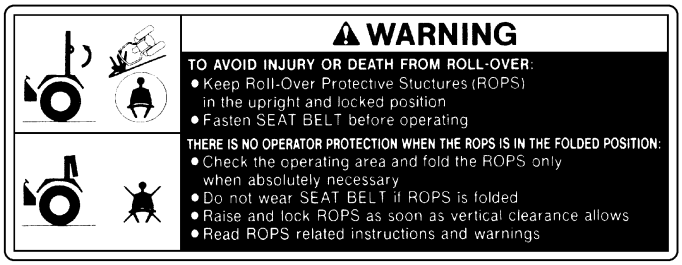

1AGAMAAAP2370

(2) Part No. TA140-4933-1

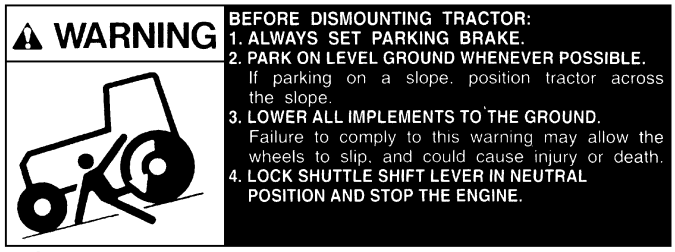

1AGAMAAAP4000

(3) Part No. 6C090-4958-2
Stay clear of engine fan and fan belt.

1AGAMAAAP2620

(4) Part No. TA040-4956-2
Diesel fuel only. No fire

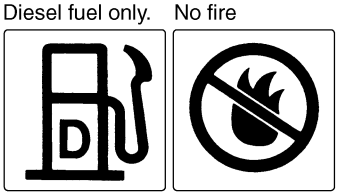

(5) Part No. TA040-4935-1

1AGAMAAAP2500

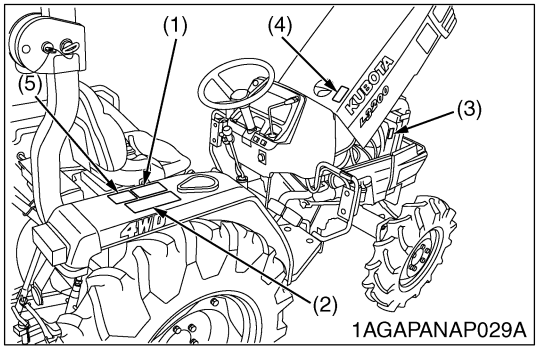

1AGAPANAP029A

3TLAAAECP001A

https://truckmanualshub.com/

(1) Part No. TD020-3012-2

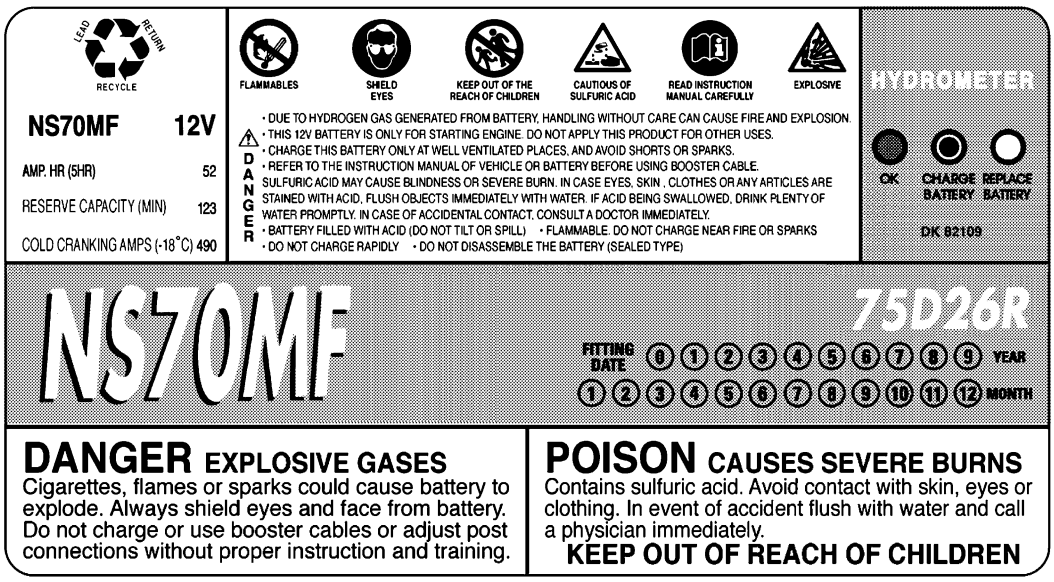

1AGAMAAAP0810

(2) Part No. TA040-4965-2

1AGAMAAAP2450

(3) Part No. 6C090-4958-2
Stay clear of engine fan and fan belt.

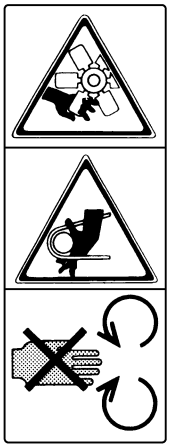

1AGAMAAAP2620

(4) Part No. TC030-4958-1
Do not touch hot surface like muffler, etc.

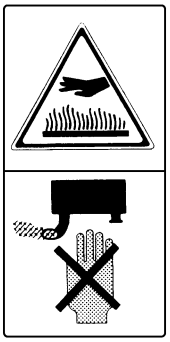

1AGAMAAAP2400

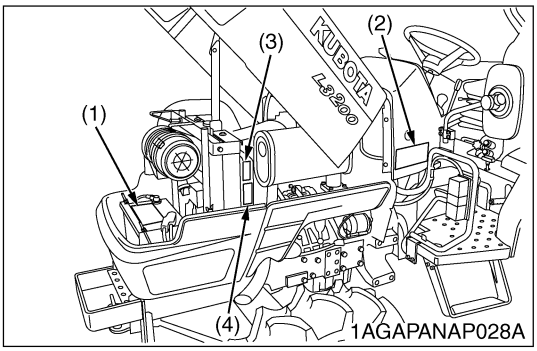

1AGAPANAP028A

3TLAAAECP002A

https://truckmanualshub.com/

(1) Part No. 35260-3491-4

⚠ CAUTION

TO AVOID PERSONAL INJURY:

1. Read and understand the operator's manual before operation.
2. Before starting the engine, make sure that everyone is at a safe distance from the tractor and that the PTO is OFF.
3. Do not allow passengers on the tractor at any time.
4. Before allowing other people to use the tractor, have them read the operator's manual.
5. Check the tightness of all nuts and bolts regularly.
6. Keep all shields in place and stay away from all moving parts.
7. Lock the two brake pedals together before driving on the road.
8. Slow down for turns, or rough roads, or when applying individual brakes.
9. On public roads use SMV emblem and hazard lights, if required by local traffic and safety regulations.
10. Pull only from the drawbar.
11. Before dismounting, lower the implement to the ground, set the parking brake, stop the engine and remove the key.
12. Securely support tractor and implements before working underneath.

1AGAMAAAP2390

(2) Part No. TA040-4959-3

⚠ WARNING

TO AVOID PERSONAL INJURY.

1. Keep PTO shield in place at all times.
2. Do not operate the PTO at speeds faster than the speed recommended by the implement manufacturer
3. For trailing PTO-driven implements, set drawbar at towing position. (see operator's manual)

1AGAMAAAP2470

(3) Part No. 3A111-9554-1

[Rear mount type ROPS]

⚠ WARNING

Never modify or repair a ROPS because welding, grinding, drilling or cutting any portion may weaken the structure.

⚠ CAUTION

TO AVOID INJURY WHEN RAISING OR FOLDING ROPS:

- Set parking brake and stop engine.
- Remove any obstruction that may prevent raising or folding of the ROPS.
- Do not allow any bystanders.
- Always perform function from a stable position at the rear of the tractor.
- Hold the top of the ROPS securely when raising or folding.
- Make sure all pins are installed and locked.

1AGAMAAAP2380

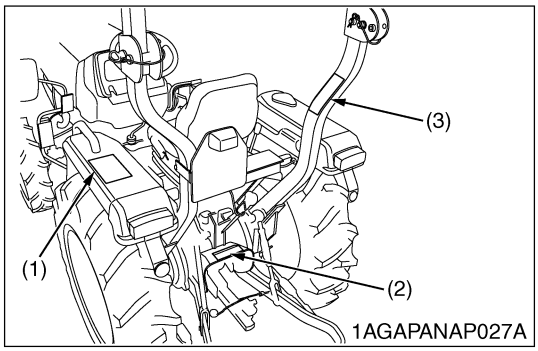

1AGAPANAP027A

CARE OF DANGER, WARNING AND CAUTION LABELS

1. Keep danger, warning and caution labels clean and free from obstructing material.
2. Clean danger, warning and caution labels with soap and water, dry with a soft cloth.
3. Replace damaged or missing danger, warning and caution labels with new labels.
4. If a component with danger, warning or caution label(s) affixed is replaced with new part, make sure new label(s) is (are) attached in the same location(s) as the replaced component.
5. Mount new danger, warning and caution labels by applying on a clean dry surface and pressing any bubbles to outside edge.

3TLAAAECP003A

https://truckmanualshub.com/

[Mid Mount Type ROPS] (For Spain, Portugal, Italy, Greece)

(1) Part No. 3A431-9848-1

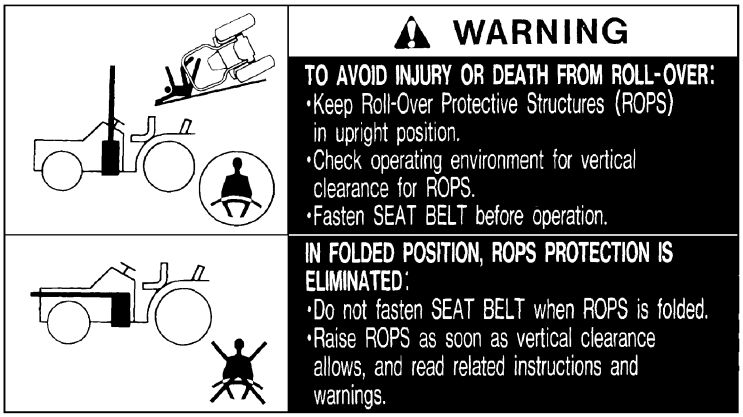

(2) Part No. TA140-4933-1

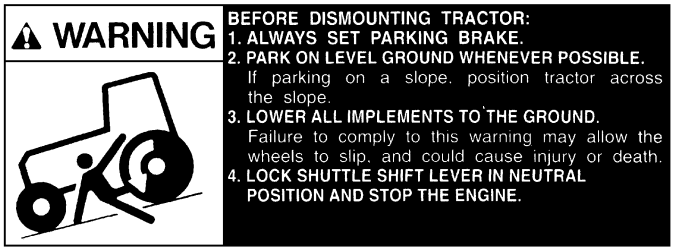

1AGAMAAAP4000

(3) Part No. TC229-4746-1

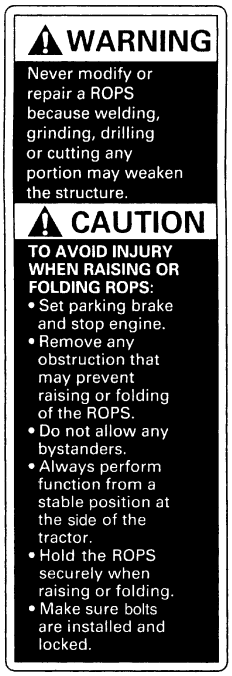

(4) Part No. TA040-4956-2

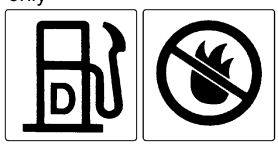

1AGAMAAAP2480

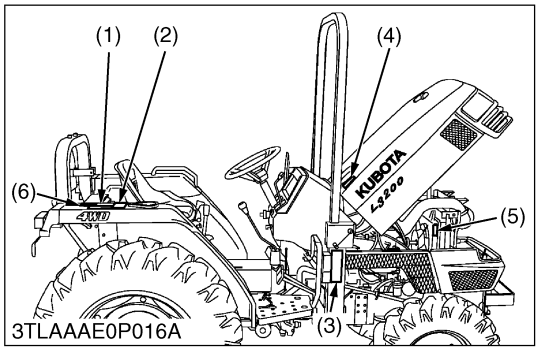

3TLAAAE0P016A

(5) Part No. 6C090-4958-2
Stay clear of engine fan and fan belt

1AGAMAAAP2620

(5) Part No. TA040-4935-1

1AGAMAAAP2500

3TLAAAECP004A

(1) Parts No. TD020-3012-2

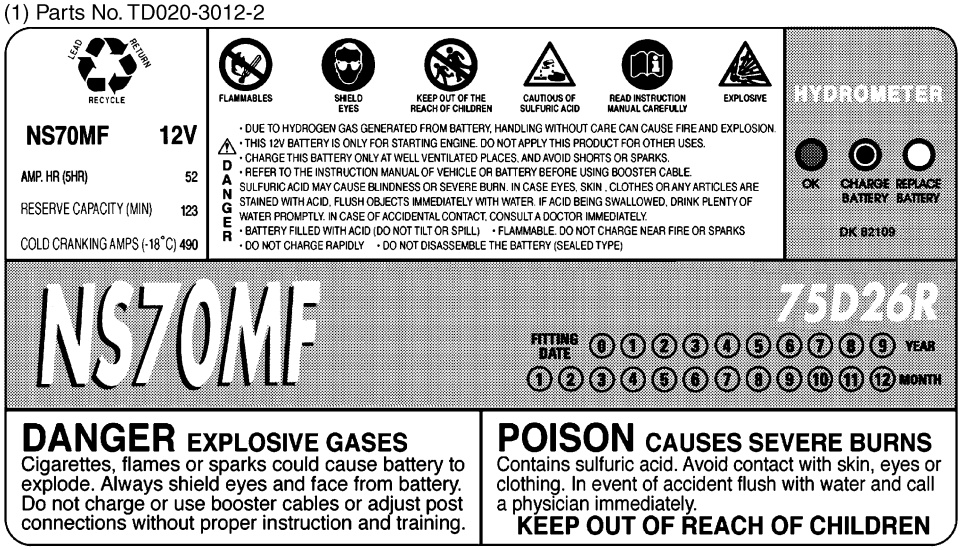

1AGAMAAAP0810

(2) Parts No. TA040-4965-2

1AGAMAAAP2450

(3) Parts No. 6C090-4958-2
Stay clear of engine fan an fan belt.

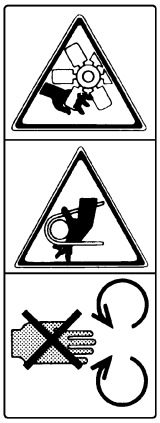

1AGAMAAAP262A

(4) Parts No. TC030-4958-1
Do not touch hot surface like muffler, etc.

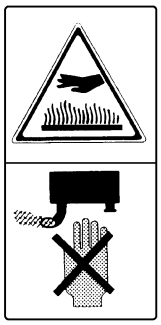

1AGAMAAAP240A

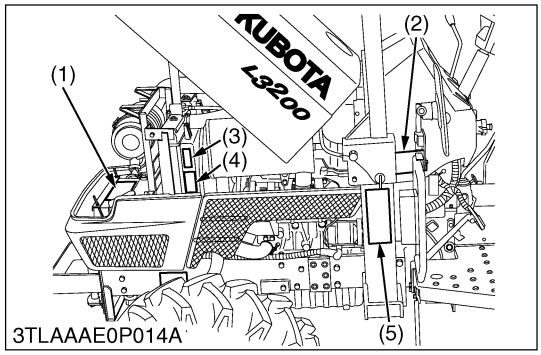

(5) Parts No. TC229-4928-1

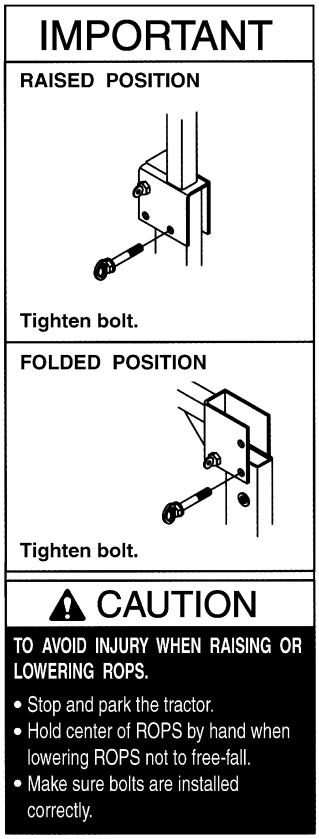

3TLAAAECP005A

https://truckmanualshub.com/

(1) Part No. 35260-3491-4

⚠ CAUTION

TO AVOID PERSONAL INJURY:

1. Read and understand the operator's manual before operation.
2. Before starting the engine, make sure that everyone is at a safe distance from the tractor and that the PTO is OFF.
3. Do not allow passengers on the tractor at any time.
4. Before allowing other people to use the tractor, have them read the operator's manual.
5. Check the tightness of all nuts and bolts regularly.
6. Keep all shields in place and stay away from all moving parts.
7. Lock the two brake pedals together before driving on the road.
8. Slow down for turns, or rough roads, or when applying individual brakes.
9. On public roads use SMV emblem and hazard lights, if required by local traffic and safety regulations.
10. Pull only from the drawbar.
11. Before dismounting, lower the implement to the ground, set the parking brake, stop the engine and remove the key.
12. Securely support tractor and implements before working underneath.

1AGAMAAAP2390

(2) Part No. TA040-4959-3

⚠ WARNING

TO AVOID PERSONAL INJURY.

1. Keep PTO shield in place at all times.
2. Do not operate the PTO at speeds faster than the speed recommended by the implement manufacturer
3. For trailing PTO-driven implements, set drawbar at towing position. (see operator's manual)

1AGAMAAAP2470

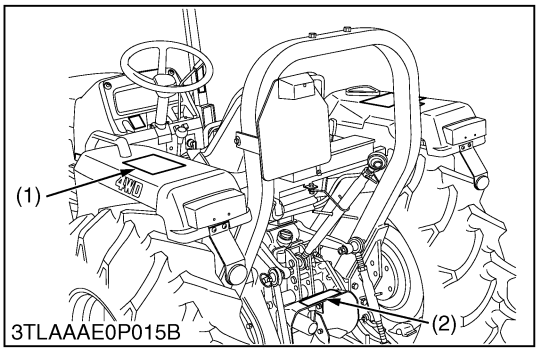

CARE OF DANGER, WARNING AND CAUTION LABELS

1. Keep danger, warning and caution labels clean and free from obstructing material.
2. Clean danger, warning and caution labels with soap and water, dry with a soft cloth.
3. Replace damaged or missing danger, warning and caution labels with new labels.
4. If a component with danger, warning or caution label(s) affixed is replaced with new part, make sure new label(s) is (are) attached in the same location(s) as the replaced component.
5. Mount new danger, warning and caution labels by applying on a clean dry surface and pressing any bubbles to outside edge.

3TLAAAECP006A

https://truckmanualshub.com/

SPECIFICATIONS

Model			L3200	
			Rear Mount Type ROPS (For France, Germany, United Kingdom)	**Mid Mount Type ROPS (For Spain, Portugal, Italy, Greece)**
PTO power			21.3 kW (28.6 HP)	
Engine	Maker		KUBOTA	
	Model		D1703-MA-E2A	
	Type		Vertical, water-cooled, 4-cycle diesel	
	Number of cylinders		3	
	Bore and stroke		87 × 92.4 mm (3.4 × 3.6 in.)	
	Total displacement		1647 cm^3 (101.0 cu.in.)	
	Engine gross power		24.6 kW (32.9 HP)	
	Rated revolution		41.7 r/s [2500 min^{-1} (rpm)]	
	Maximum torque		108.4 N·m (80.0 ft-lbs)	
	Battery		12 V. RC : 123 min., CCA : 490 A	
	Fuel		Diesel fuel No. 1-D, No. 2-D	
Capacities	Fuel tank		34 L (9.0 U.S.gals, 7.5 Imp.gals)	
	Engine crankcase (with filter)		5.7 L (6.0 U.S.qts., 5.0 Imp.qts)	
	Engine coolant		6.0 L (6.3 U.S.qts., 5.3 Imp.qts)	
	Transmission case		27.5 L (7.3 U.S.qts, 6.1 Imp.gals)	
Dimensions	Overall length (without 3P)		2810 mm (110.6 in.)	
	Overall width (min. tread)		1290 mm (50.8 in.)	
	Overall height (with ROPS)		2460 mm (96.9 in.)	2230 mm (87.8 in.)
	Overall height (Top of steering wheel)		1475 mm (58.1 in.)	
	Wheel base		1610 mm (63.4 in.)	
	Min. ground clearance		345 mm (13.6 in.)	
	Tread	Front	1085 mm (42.7 in.)	
		Rear	1015 mm (40.0 in.), 1115 mm (43.9 in.), 1195 mm (47.0 in.), 1295 mm (51.0 in.)	
Weight (with ROPS)			1210 kg (2668 lbs)	1240 kg (2734 lbs)
Clutch			Dry type dual stage	
Traveling system	Tires	AG Front	7.00 – 16	
		AG Rear	11.2 – 24	
	Steering		Integral type power steering	
	Transmission		Gear shift, 8 forward and 4 reverse	
	Brake		Wet disk type	
	Min. turning radius (without brake)		2.5 m (8.2 feet)	
Hydraulic unit	Hydraulic control system		Position control	Draft control
	Pump capacity (main)		22.2 L/min. (5.9 U.S.gals./min., 4.9 Imp.gals./min.)	
	Pump capacity (PS)		13.5 L/min. (3.6 U.S.gals./min., 3.0 Imp.gals./min.)	
	Three point hitch		Category I	
	Max. lift force	At lift points	8885 N (906 kgf, 1998 lbs)	
		24 in. behind points	6384 N (651 kgf, 1435 lbs)	
	System pressure		15.7 MPa (160 kgf/cm^2)	
PTO	Rear PTO		SAE 1-3/8, 6 splines	
	PTO / Engine speed		9 r/s [540 min^{-1} (rpm)] / 40.4 r/s [2425 min^{-1} (rpm)]	

NOTE: * Manufacture's estimate. The company reserves the right to change the specifications without notice.

W1028103

https://truckmanualshub.com/

DIMENSIONS

[Rear Mount Type ROPS]

Unit : mm (in.)

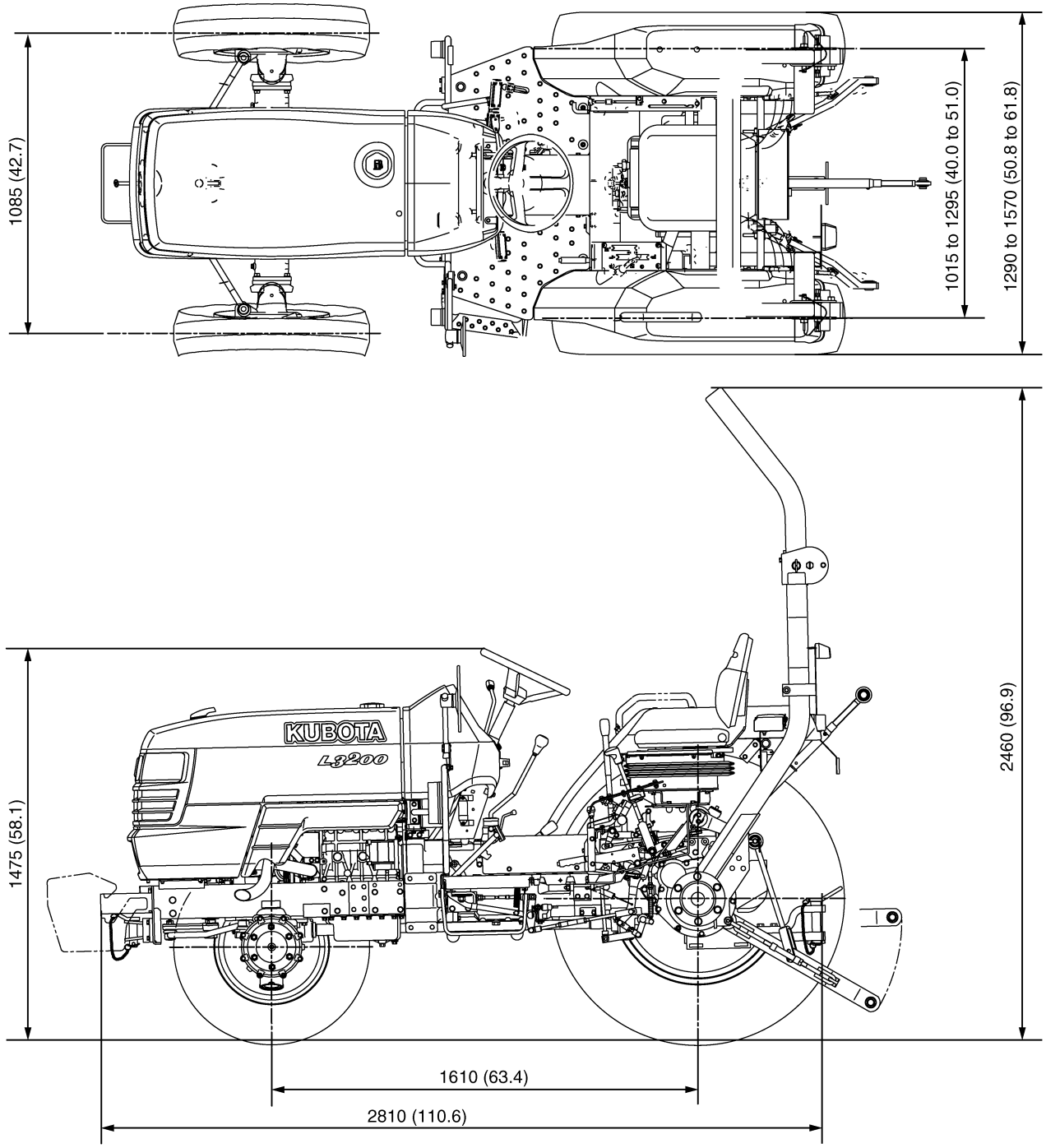

3TLAAAEFP002A

https://truckmanualshub.com/

[Mid Mount Type ROPS]

Unit : mm (in.)

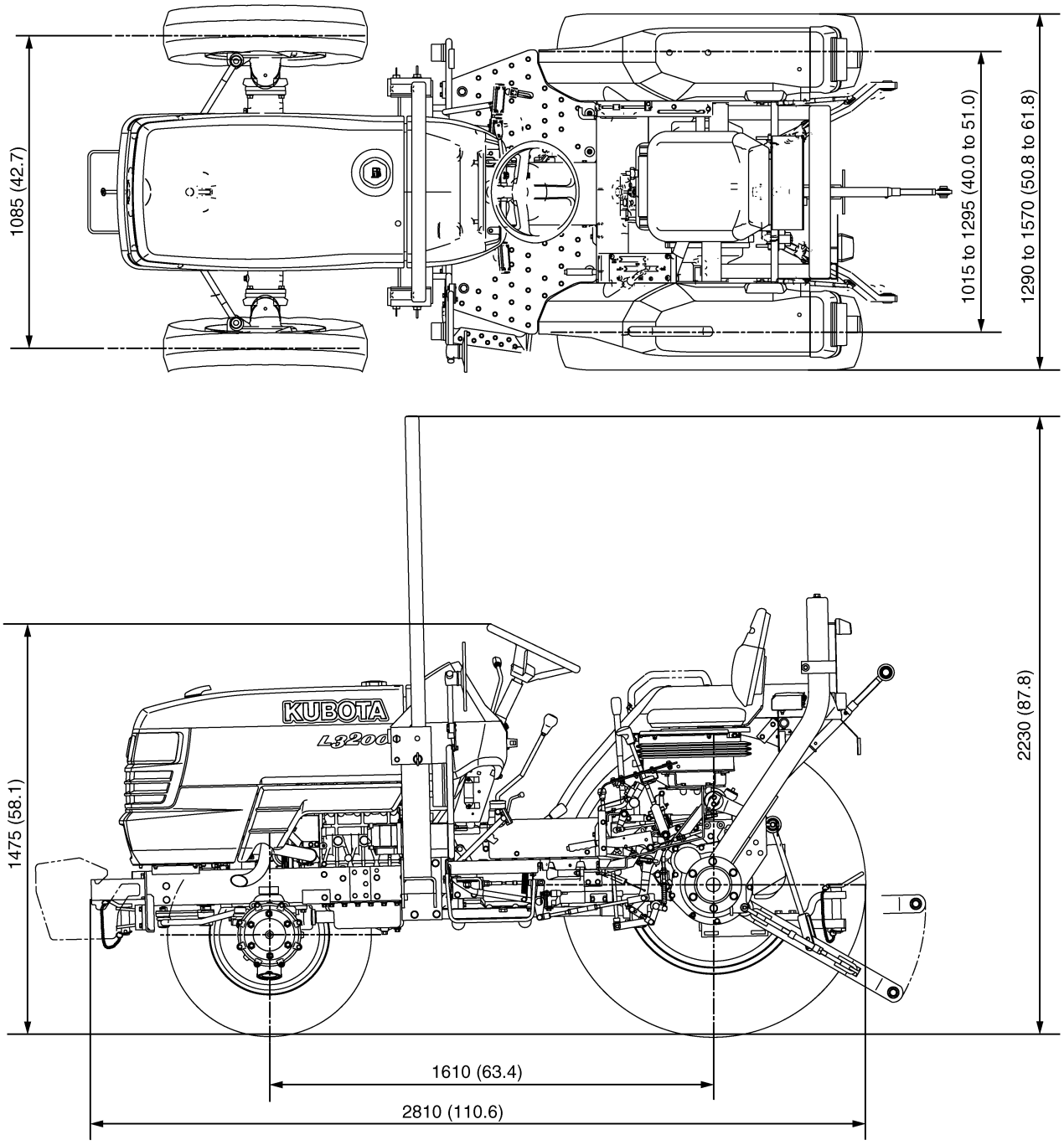

3TLAAAEFP002A

https://truckmanualshub.com/

G GENERAL

https://truckmanualshub.com/

GENERAL

CONTENTS

1. TRACTOR INDENTIFICATION G-1
2. GENERAL PRECAUTIONS G-2
3. HANDLING PRECAUTIONS FOR ELECTRICAL PARTS AND WIRING .. G-3
   [1] WIRING G-3
   [2] BATTERY G-5
   [3] FUSE G-5
   [4] CONNECTOR G-5
4. LUBRICANTS, FUEL AND COOLANT G-6
5. TIGHTENING TORQUES G-7
   [1] GENERAL USE SCREWS, BOLTS AND NUTS G-7
6. MAINTENANCE G-8
7. CHECK AND MAINTENANCE G-10
   [1] DAILY CHECK G-10
   [2] CHECK POINTS OF INITIAL 50 HOURS G-11
   [3] CHECK POINTS OF EVERY 50 HOURS G-16
   [4] CHECK POINT OF EVERY 100 HOURS G-18
   [5] CHECK POINTS OF EVERY 200 HOURS G-24
   [6] CHECK POINTS OF EVERY 400 HOURS G-26
   [7] CHECK POINTS OF EVERY 600 HOURS G-26
   [8] CHECK POINT OF EVERY 800 HOURS G-26
   [9] CHECK POINT OF EVERY 1 YEAR G-26
   [10] CHECK POINTS OF EVERY 2 YEARS G-27
   [11] OTHERS G-29
8. SPECIAL TOOLS G-31
   [1] SPECIAL TOOLS FOR ENGINE G-31
   [2] SPECIAL TOOLS FOR TRACTOR G-37
9. TIRES G-43
   [1] TIRE PRESSURE G-43
   [2] TREADS ADJUSTMENT G-44
      (1) Front Wheels G-44
      (2) Rear Wheels G-45
   [3] TIRE LIQUID INJECTION G-46

https://truckmanualshub.com/

1. TRACTOR INDENTIFICATION

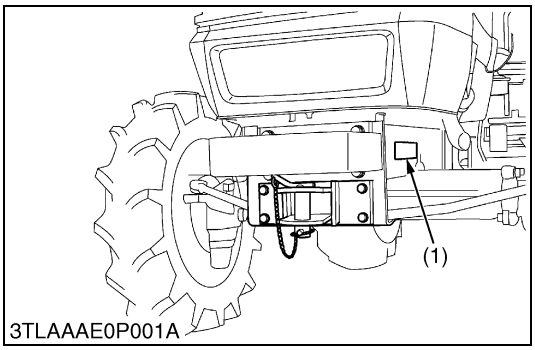

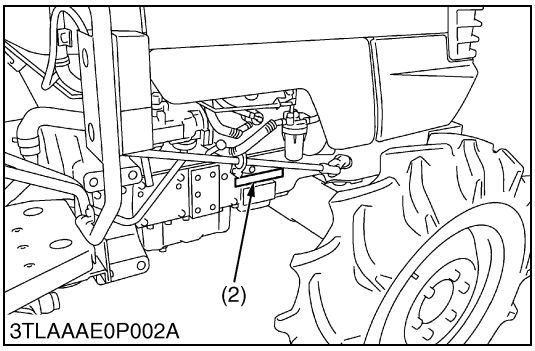

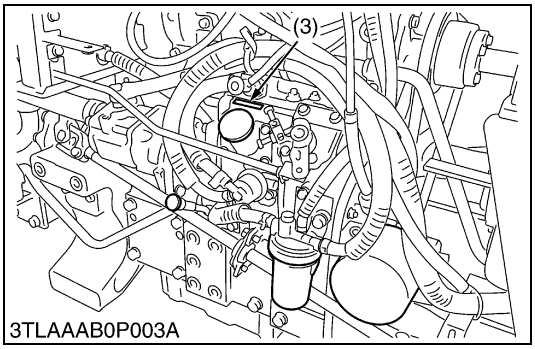

(1) Tractor Identification Plate
(2) Tractor Serial Number
(3) Engine Serial Number

W1010590

https://truckmanualshub.com/

2. GENERAL PRECAUTIONS

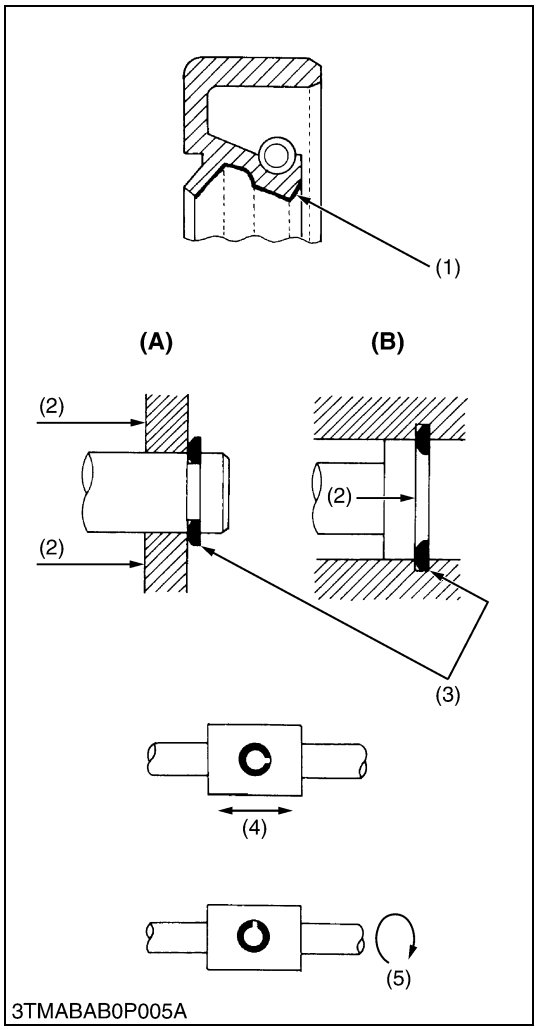

- During disassembly, carefully arrange removed parts in a clean area to prevent confusion later. Screws, bolts and nuts should be installed in their original position to prevent reassembly errors.
- When special tools are required, use KUBOTA genuine special tools. Special tools which are not frequently used should be made according to the drawings provided.
- Before disassembling or servicing electrical wires, always disconnect the ground cable from the battery first.
- Remove oil and dirt from parts before measuring.
- Use only KUBOTA genuine parts for parts replacement to maintain machine performance and to assure safety.
- Gaskets and O-rings must be replaced during reassembly. Apply grease to new O-rings or oil seals before assembling. See the figure left side.
- When reassembling external snap rings or internal snap rings, they must be positioned so that sharp edge faces against the direction from which a force is applied. See the figure left side.
- When inserting spring pins, their splits must face the direction from which a force is applied. See the figure left side.
- To prevent damage to the hydraulic system, use only specified fluid or equivalent.

(1) Grease
(2) Force
(3) Sharp Edge
(4) Axial Force
(5) Rotating Movement

(A) External Snap Ring
(B) Internal Snap Ring

W1010794

https://truckmanualshub.com/

3. HANDLING PRECAUTIONS FOR ELECTRICAL PARTS AND WIRING

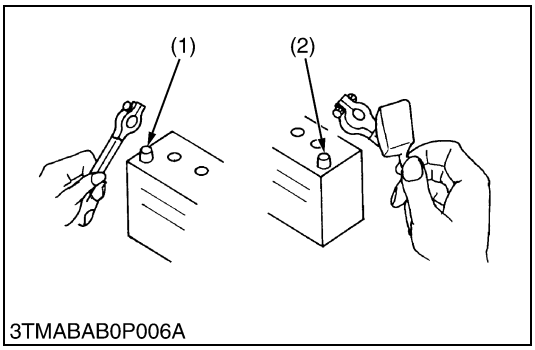

3TMABAB0P006A

To ensure safety and prevent damage to the machine and surrounding equipment, heed the following precautions in handling electrical parts and wiring.

■ **IMPORTANT**

- **Check electrical wiring for damage and loosened connection every year. To this end, educate the customer to do his or her own check and at the same time recommend the dealer to perform periodic check while carrying out routine servicing.**
- **Do not attempt to modify or remodel any electrical parts and wiring.**
- **When removing the battery cables, disconnect the negative cable first. When installing the battery cables, connect the positive cable first.**

(1) Negative Terminal (2) Positive Terminal

W10111140

[1] WIRING

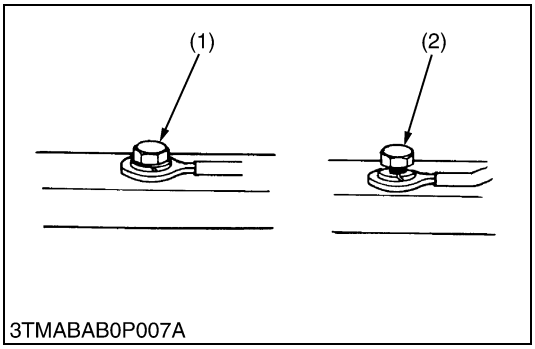

3TMABAB0P007A

- Securely tighten wiring terminals.

(1) Correct (Securely Tighten) (2) Incorrect (Loosening Leads to Faulty Contact)

W10112160

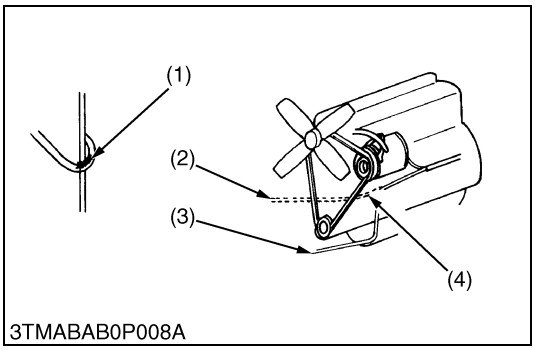

3TMABAB0P008A

- Do not let wiring contact dangerous part.

(1) Dangerous Part (3) Wiring (Correct)
(2) Wiring (Incorrect) (4) Dangerous Part

W10113130

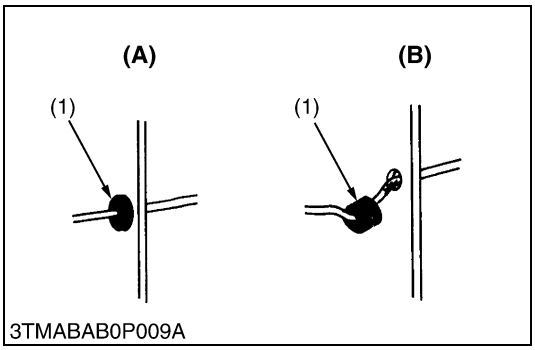

3TMABAB0P009A

- Securely insert grommet.

(1) Grommet **(A) Correct**
(B) Incorrect

W10113880

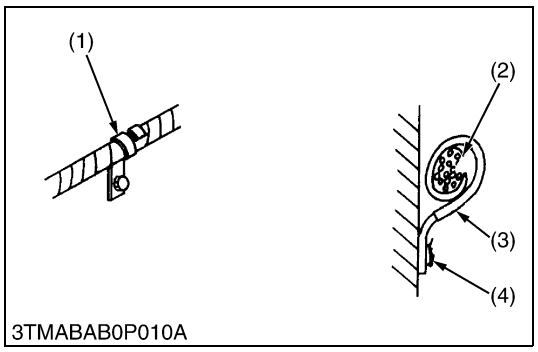

- Securely clamp, being careful not to damage wiring.

(1) Clamp
  • Wind Clamp Spirally
(2) Wire Harness
(3) Clamp
(4) Welding Dent

W10114580

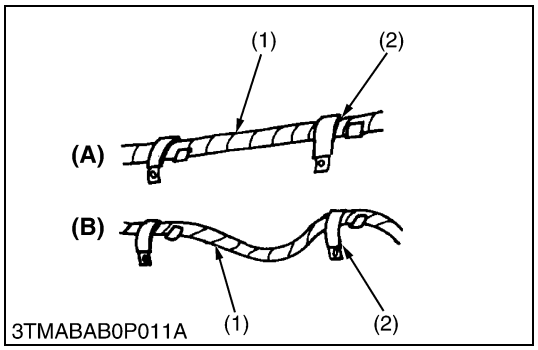

- Clamp wiring so that there is no twist, unnecessary sag, or excessive tension, except for movable part, where sag be required.

(1) Wiring
(2) Clamp
(A) Correct
(B) Incorrect

W10115870

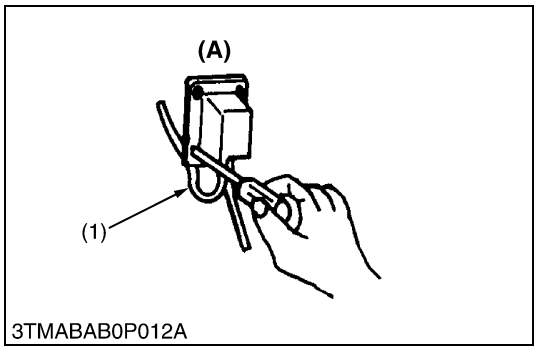

- In installing a part, take care not to get wiring caught by it.

(1) Wiring
(A) Incorrect

W10116700

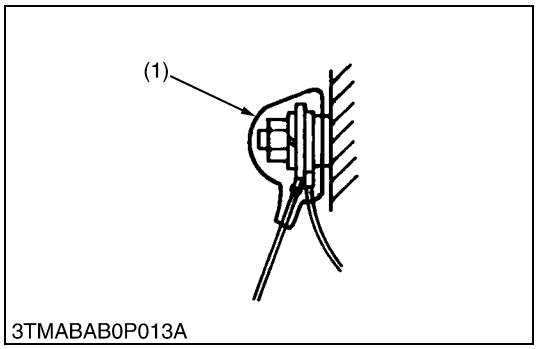

- After installing wiring, check protection of terminals and clamped condition of wiring, only connect battery.

(1) Cover
  • Securely Install Cover

W10117350

https://truckmanualshub.com/

[2] BATTERY

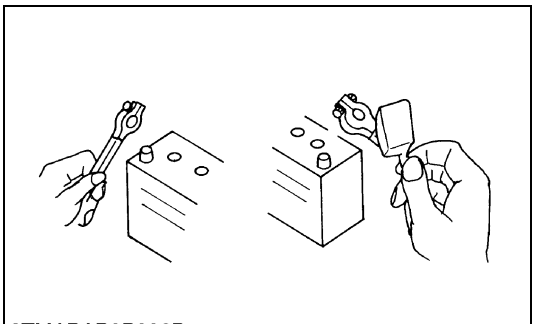
3TMABAB0P006B

- Take care not to confuse positive and negative terminal posts.
- When removing battery cables, disconnect negative cable first. When installing battery cables, check for polarity and connect positive cable first.
- Do not install any battery with capacity other than is specified (Ah).
- After connecting cables to battery terminal posts, apply high temperature grease to them and securely install terminal covers on them.
- Do not allow dirt and dust to collect on battery.

CAUTION

- **Take care not to let battery liquid spill on your skin and clothes. If contaminated, wash it off with water immediately.**
- **Before recharging the battery, remove it from the machine.**
- **Before recharging, remove cell caps.**
- **Do recharging in a well-ventilated place where there is no open flame nearby, as hydrogen gas and oxygen are formed.**

W10118160

[3] FUSE

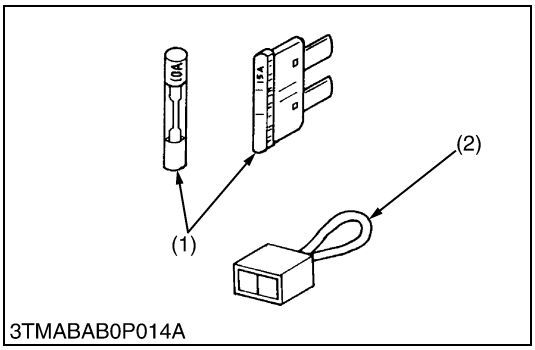

3TMABAB0P014A

- Use fuses with specified capacity.
  Neither too large or small capacity fuse is acceptable.
- Never use steel or copper wire in place of fuse.
- Do not install working light, radio set, etc. on machine which is not provided with reserve power supply.
- Do not install accessories if fuse capacity of reserve power supply is exceeded.

(1) Fuse (2) Fusible Link

W10120920

[4] CONNECTOR

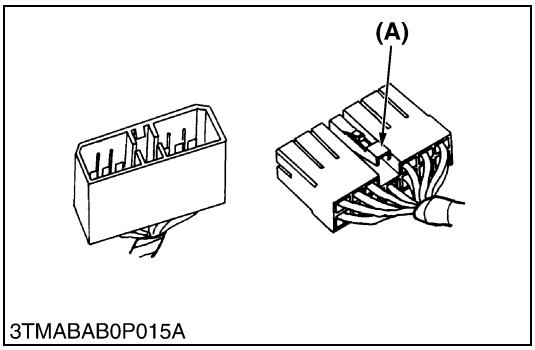

3TMABAB0P015A

- For connector with lock, push lock to separate.

(A) Push

W10122110

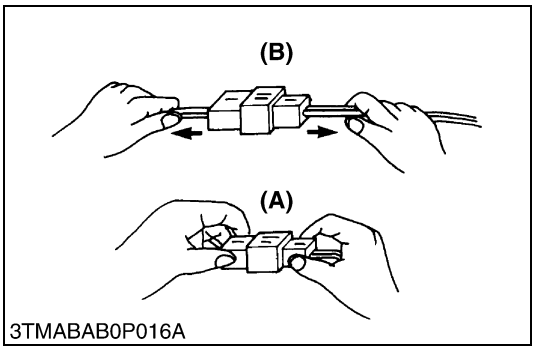

3TMABAB0P016A

- In separating connectors, do not pull wire harnesses.
- Hold connector bodies to separate.

(A) Correct **(B) Incorrect**

W10122720

https://truckmanualshub.com/

4. LUBRICANTS, FUEL AND COOLANT

	Place	Capacity L3200	Lubricants, fuel and coolant
1	Fuel	34 L 9.0 U.S.gals. 7.4 Imp.gals.	No. 2-D diesel fuel No. 1-D diesel fuel if temperature is below –10 °C (14 °F)
2	Coolant	6.0 L 6.3 U.S.qts. 5.3 Imp.qts.	Fresh clean water with anti-freeze
	Recovery tank	0.6 L 0.63 U.S.qts. 0.53 Imp.qts.	
3	Engine crankcase (with filter)	5.7 L 6.0 U.S.qts. 5.0 Imp.qts.	Engine oil : API service Classification CD, CE or CF Below 0 °C (32 °F) : SAE10W, 10W-30 or 10W-40 0 to 25 °C (32 to 77 °F): SAE20, 10W-30 or 10W-40 Above 25 °C (77 °F): SAE30, 10W-30 or 10W-40
4	Transmission case	27.5 L 7.3 U.S.gals. 6.1 Imp.gals.	KUBOTA UDT or SUPER UDT fluid*
5	Front axle case	4.5 L 4.8 U.S.qts. 3.9 Imp.qts.	KUBOTA UDT or SUPER UDT fluid* or SAE80, 90 gear oil

Greasing

	Place	No. of greasing points	Capacity	Type of grease
6	Front axle support	2	Until grease overflows	Multipurpose type grease NLGI-2 or NLGI-1 (GC-LB)
	Clutch pedal	1		
	Brake pedal	1		
	Pedal shaft	1		
	Top link bracket	2 [with draft control (if equipped)]		
	Battery terminals	2		
	Lift rod	1		

* KUBOTA original transmission hydraulic fluid.

■ **NOTE**

- Oil used in the engine should have an American Petroleum Institute (API) service classification and Proper SAE Engine Oil according to the ambient temperatures as shown above.
- With the emission control now in effect, the CF-4 and CG-4 lubricating oils have been developed for use of a low-sulfur fuel on on-road vehicle engines. When an off-road vehicle engine runs on a high-sulfur fuel, it is advisable to employ the CF, CD or CE lubricating oil with a high total base number. **If the CF-4 or CG-4 lubricating oil is used with a high-sulfur fuel, change the lubricating oil at shorter intervals.**
- Lubricating oil recommended when a low-sulfur or high-sulfur fuel is employed.

https://truckmanualshub.com/

5. TIGHTENING TORQUES

[1] GENERAL USE SCREWS, BOLTS AND NUTS

Screws, bolts, nuts and whose tightening torque are not specified in this Workshop Manual should be tightened according to the table below.

Indication on top of bolt	⬡ ④ No-grade or 4T						⟨7⟩ 7T						⟨9⟩ 9T		
Material of bolt	SS400, S20C						S43C, S48C						SCr435, SCM435		
Material of opponent part	Ordinariness			Aluminum			Ordinariness			Aluminum			Ordinariness		
Unit / Diameter	N·m	kgf·m	ft-lbs	N·m	kgf·m	ft-lbs	N·m	kgf·m	ft-lbs	N·m	kgf·m	ft-lbs	N·m	kgf·m	ft-lbs
M6 (6 mm, 0.24 in.)	7.85 to 9.31	0.80 to 0.95	5.79 to 6.87	7.85 to 8.82	0.80 to 0.90	5.79 to 6.50	9.81 to 11.2	1.00 to 1.15	7.24 to 8.31	7.85 to 8.82	0.80 to 0.90	5.79 to 6.50	12.3 to 14.2	1.25 to 1.45	9.05 to 10.4
M8 (8 mm, 0.31 in.)	17.7 to 20.5	1.8 to 2.1	13.1 to 15.1	16.7 to 19.6	1.7 to 2.0	12.3 to 14.4	23.6 to 27.4	2.4 to 2.8	17.4 to 20.2	17.7 to 20.5	1.8 to 2.1	13.1 to 15.1	29.5 to 34.3	3.0 to 3.5	21.7 to 25.3
M10 (10 mm, 0.39 in.)	39.3 to 45.1	4.0 to 4.6	29.0 to 33.2	31.4 to 34.3	3.2 to 3.5	23.2 to 25.3	48.1 to 55.8	4.9 to 5.7	35.5 to 41.2	39.3 to 44.1	4.0 to 4.5	29.0 to 32.5	60.9 to 70.6	6.2 to 7.2	44.9 to 52.0
M12 (12 mm, 0.47 in.)	62.8 to 72.5	6.4 to 7.4	46.3 to 53.5	–	–	–	77.5 to 90.2	7.9 to 9.2	57.2 to 66.5	62.8 to 72.5	6.4 to 7.4	46.3 to 53.5	103 to 117	10.5 to 12.0	76.0 to 86.7
M14 (14 mm, 0.55 in.)	108 to 125	11.0 to 12.8	79.6 to 92.5	–	–	–	124 to 147	12.6 to 15.0	91.2 to 108	–	–	–	167 to 196	17.0 to 20.0	123 to 144
M16 (16 mm, 0.63 in.)	167 to 191	17.0 to 19.5	123 to 141	–	–	–	197 to 225	20.0 to 23.0	145 to 166	–	–	–	260 to 304	26.5 to 31.0	192 to 224
M18 (18 mm, 0.71 in.)	246 to 284	25.0 to 29.0	181 to 209	–	–	–	275 to 318	28.0 to 32.5	203 to 235	–	–	–	344 to 402	35.0 to 41.0	254 to 296
M20 (20 mm, 0.79 in.)	334 to 392	34.0 to 40.0	246 to 289	–	–	–	368 to 431	37.5 to 44.0	272 to 318	–	–	–	491 to 568	50.0 to 58.0	362 to 419

W1034542

https://truckmanualshub.com/

6. MAINTENANCE

No.	Item	Period	Indication on hour meter														After since	Refer-ence page	
			50	100	150	200	250	300	350	400	450	500	550	600	650	700			
1	Engine oil	Change	★	☆		☆		☆		☆		☆		☆		☆	every 100Hr	G-11	
2	Engine oil filter	Replace	★			☆				☆				☆			every 200Hr	G-11	
3	Hydraulic oil filter	Replace	★			☆				☆				☆			every 200Hr	G-13	
4	Transmission fluid	Change	★							☆							every 400Hr	G-12	
5	Front axle case oil	Change	★							☆							every 400Hr	G-14	
6	Front axle pivot	Adjust												☆			every 600Hr	G-26	
7	Greasing	-	☆	☆	☆	☆	☆	☆	☆	☆	☆	☆	☆	☆	☆	☆	every 50Hr	G-16	
8	Engine start system	Check	☆	☆	☆	☆	☆	☆	☆	☆	☆	☆	☆	☆	☆	☆	every 50Hr	G-17	
9	Wheel bolt torque	Check	☆	☆	☆	☆	☆	☆	☆	☆	☆	☆	☆	☆	☆	☆	every 50Hr	G-17	
10	Battery condition	Check		☆		☆		☆		☆		☆		☆		☆	every 100Hr	G-22	*4
11	Air cleaner element	Clean		☆		☆		☆		☆		☆		☆		☆	every 100Hr	G-18	*1
		Replace															every 1 year	G-18	*2
12	Fuel filter element	Clean		☆		☆		☆		☆		☆		☆		☆	every 100Hr	G-19	
		Replace															every 400Hr	G-19	
13	Fan belt	Adjust		☆		☆		☆		☆		☆		☆		☆	every 100Hr	G-19	
14	Clutch	Adjust	★	☆		☆		☆		☆		☆		☆		☆	every 100Hr	G-15	
15	Brake	Adjust		☆		☆		☆		☆		☆		☆		☆	every 100Hr	G-20	
16	Radiator hose and hose clamp	Check				☆				☆				☆			every 200Hr	G-24	
		Replace															every 2 years	G-24	
17	Power steering oil line	Check				☆				☆				☆			every 200Hr	G-24	
		Replace															every 2 years	G-24	
18	Fuel line	Check		☆		☆		☆		☆		☆		☆		☆	every 100Hr	G-20	
		Replace															every 2 years	G-20	*3
19	Parking brake (Cable)	Adjust		☆		☆		☆		☆		☆		☆		☆	every 200Hr	G-21	
		Replace															every 2 years	G-21	

https://truckmanualshub.com/

No.	Item	Period	Indication on hour meter														After since	Refer-ence page	
			50	100	150	200	250	300	350	400	450	500	550	600	650	700			
20	Toe-in	Adjust				☆				☆				☆			every 200Hr	G-25	
21	Engine valve clearance	Adjust															every 800Hr	1-S11	
22	Cooling system	Flush															every 2 years	G-27, 28	
23	Coolant	Change															every 2 years	G-27, 28	
24	Fuel system	Bleed															Service as required	G-29	
25	Clutch housing water	Drain																G-29	
26	Fuse	Replace																G-30	
27	Light bulb	Replace																G-30	

■ IMPORTANT

- **The jobs indicated by ★ must be done after the first 50 hours of operation.**
- ***1 : Air cleaner should be cleaned more often in dusty conditions than in normal conditions.**
- ***2 : Every year or every 6 times of cleaning.**
- ***3 : Replace only if necessary.**
- ***4 : When the battery is used for less than 100 hours per year, check the battery condition by reading the indicator annually.**

W1067893

7. CHECK AND MAINTENANCE

CAUTION

- **Be sure to check and service the tractor on a flat place with engine shut off, the parking brake on and chock the wheels.**

[1] DAILY CHECK

To prevent trouble from occurring, it is important to know the condition of the tractor. Check the following items before starting.

Checking

- Check areas where previous trouble was experienced.
- Walk around the tractor.

1. Check the tire pressure, and check for wear and damage.
2. Check for oil and water leak.
3. Check the engine oil level.
4. Check the transmission fluid level.
5. Check the coolant level.
6. Check the condition of seat belt and ROPS attaching hardware.
7. Check and clean the radiator screen and grill.
8. Check the nuts of tires are tight.
9. Care of danger, warning and caution labels.
10. Clean around the exhaust manifold and the muffler of the engine.

- While sitting in the operator's seat.

1. Check the brake pedals and clutch pedal.
2. Check the parking brake.
3. Check the steering wheel.

- Turning the key switch.

1. Check the performance of the easy checker lights.
2. Check the lights, turn signal lights, hazard lights and other light equipment. Clean if necessary.
3. Check the performance of the meters and gauges.

- Starting the engine.

1. Check to see that the lights on the easy checker go off.
2. Check the color of the exhaust gas.
3. Check the brakes for proper operation.

https://truckmanualshub.com/

[2] CHECK POINTS OF INITIAL 50 HOURS

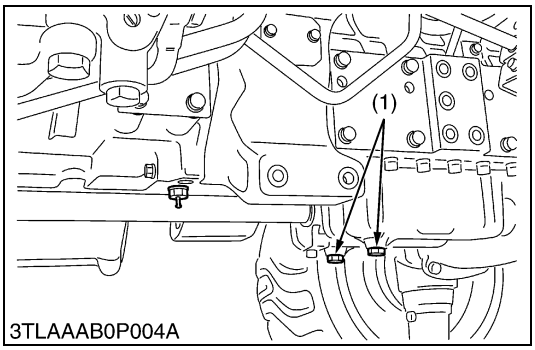

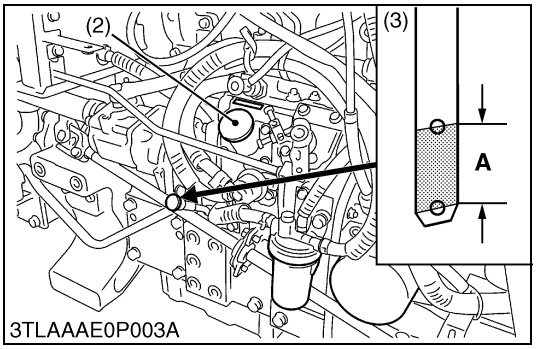

Changing Engine Oil

CAUTION

- **Before changing oil, be sure to stop the engine.**

1. Start and warm up the engine for approx. 5 minutes.
2. Place an oil pan underneath the engine.
3. To drain the used oil, remove the drain plug (1) at the bottom of the engine and drain the oil completely.
4. Screw in the drain plug (1).
5. Fill new oil up to upper hole on the dipstick (3).

■ **IMPORTANT**

- **When using an oil of different manufacture or viscosity from the previous one, remove all of the old oil.**
- **Never mix two different types of oil.**
- **Use the proper SAE Engine Oil according to ambient temperatures.**
- **Refer to "LUBRICANTS, FUEL AND COOLANT". (See page G-7).**

Engine oil	Capacity	5.7 L 6.0 U.S.qts 5.0 Imp.qts

(1) Drain Plug
(2) Oil Inlet Plug
(3) Dipstick

(A) Oil lever is acceptable within this range.

W1014533

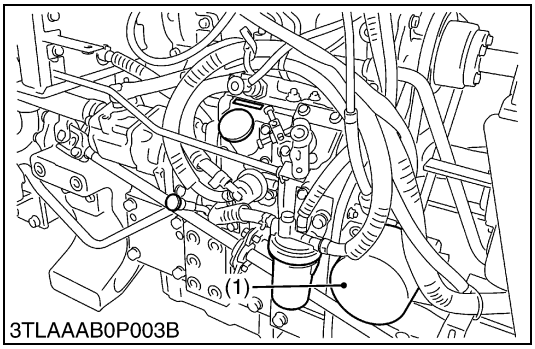

Replacing Engine Oil Filter Cartridge

CAUTION

- **Be sure to stop the engine before changing oil filter cartridge (1).**
- **Allow engine to cool down sufficiently, oil can be hot and can burn.**

1. Remove the engine oil filter cartridge (1).
2. Put a film of clean engine oil on rubber seal of new filter.
3. Tighten the filter quickly until it contacts the mounting surface. Tighten filter by hand an additional 1/2 turn only.
4. After the new filter has been replaced, the engine oil normally decreases a little. Make sure that the engine oil does not leak through the seal and be sure to check the oil level on the dipstick. Then, replenish the engine oil up to the prescribed level.

■ **IMPORTANT**

- **To prevent serious damage to the engine, replacement element must be highly efficient. Use only a KUBOTA genuine filter.**

(1) Engine Oil Filter Cartridge

W1026738

https://truckmanualshub.com/

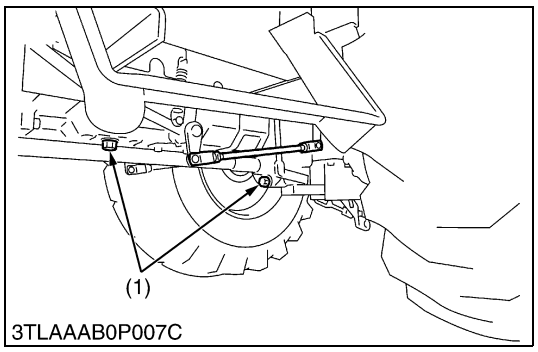

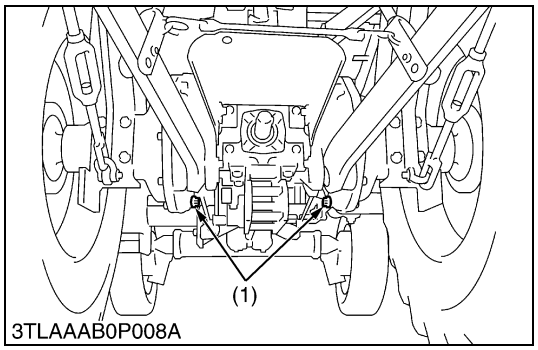

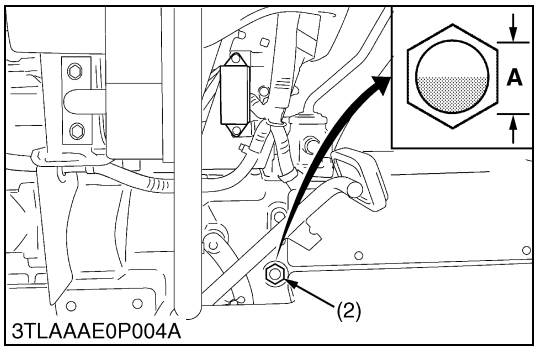

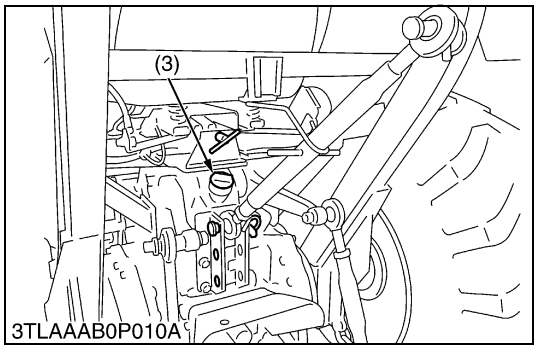

Changing Transmission Fluid

CAUTION

- **Be sure to stop the engine before checking and changing the transmission fluid.**

1. Place and oil pan underneath the transmission case.
2. Remove the drain plugs (1) at the bottom of the transmission case.
3. Drain the transmission fluid.
4. After draining, screw in the drain plugs (1).
5. Fill with the new KUBOTA SUPPER UDT fluid up to the upper line of the gauge (2).
6. After running the engine for a few minutes, stop it and check the fluid level again, if low, add fluid prescribed level (**A**).

■ **IMPORTANT**

- **Use only multi-grade transmission fluid. Use of other fluids may damage the transmission or hydraulic system.**
- **Refer to "LUBRICANTS, FUEL AND COOLANT". (See page G-7.)**
- **Never work the tractor immediately after changing the transmission fluid. Keeping the engine at medium speed for a few minutes to prevent damage to the transmission.**
- **Do not mix different brands oil together.**

Transmission fluid	Capacity	27.5 L 7.3 U.S.qts 6.1 Imp.qts

(1) Drain Plug
(2) Oil Gauge
(3) Filling Plug

A : Oil level is acceptable within this range.

W1026893

https://truckmanualshub.com/

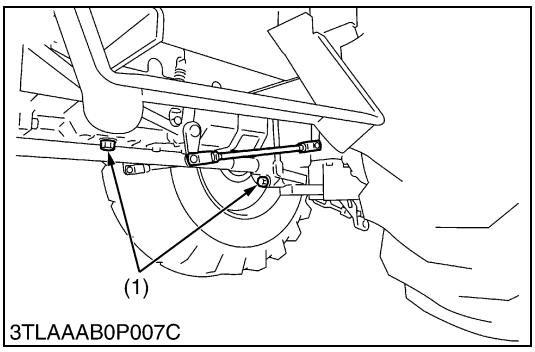

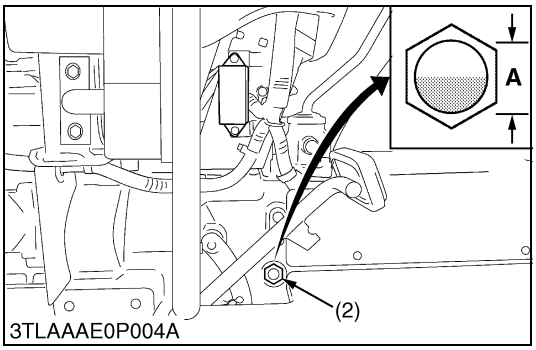

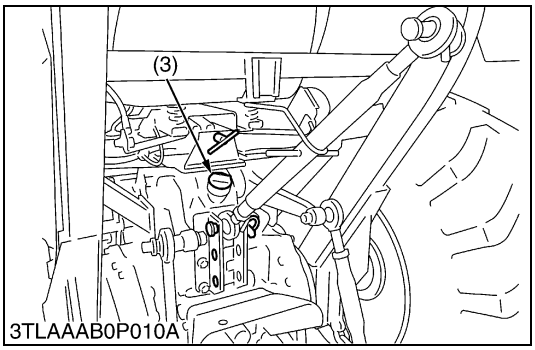

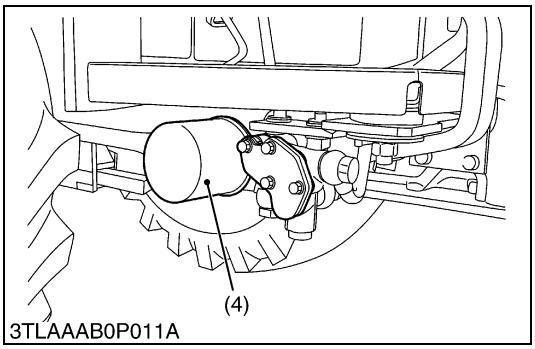

Replacing Hydraulic Oil Filter

CAUTION

- **Be sure to stop the engine before changing the oil filter.**
- **Allow engine to cool down sufficiently, oil can be hot and can burn.**

1. Place an oil pan under the tractor.
2. Remove the drain plugs (1) at the bottom of the transmission case.
3. Drain the transmission fluid.
4. After draining, screw in the drain plugs.
5. Remove the oil filter cartridge (4) by using a filter wrench.
6. Make sure the mounting surface is clean.
   Put a film of clean transmission fluid on the rubber seal of the new filter.
7. Install the new filter cartridge.
8. Quickly tighten the filter until it contacts the mounting surface, then tighten it by hand an additional 1/2 turn only.
9. After the new filters have been replaced, fill oil up to the upper line on the gauge (2).
10. After running the engine for a few minutes, stop it and recheck the oil level, add oil to the prescribed level.
11. Make sure that the transmission fluid doesn't leak through the seal of the filter.

■ IMPORTANT

- **To prevent serious damage to the hydraulic system. Use only a genuine KUBOTA filter or its equivalents.**

(1) Drain Plug
(2) Oil Gauge
(3) Filling Plug
(4) Hydraulic Oil Filter

A : Oil level is acceptable within this range.

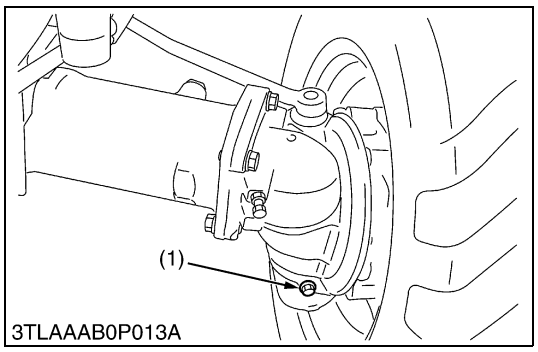

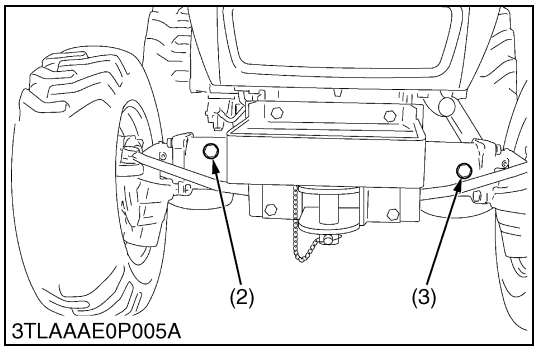

Changing Front Axle Case Oil

1. Place the oil pans underneath the front axle case.
2. Remove the drain plug (1) both sides and filling port plug (2) to drain the oil.
3. After draining, reinstall the drain plug.
4. Remove the oil level check plug (3).
5. Fill with the new oil up to the check plug (3) port.
6. After filling, reinstall the check plug (3) and filling port plug.

■ **IMPORTANT**

- **Use KUBOTA SUPER UDT fluid or SAE 80, 90 gear oil. Refer to "LUBRICANTS, FUEL AND COOLANT". (See page G-7.)**

Front axle case oil	Capacity	4.5 L 4.8 U.S.qts 3.9 Imp.qts

(1) Drain Plug
(2) Filling Port Plug
(3) Check Plug

https://truckmanualshub.com/

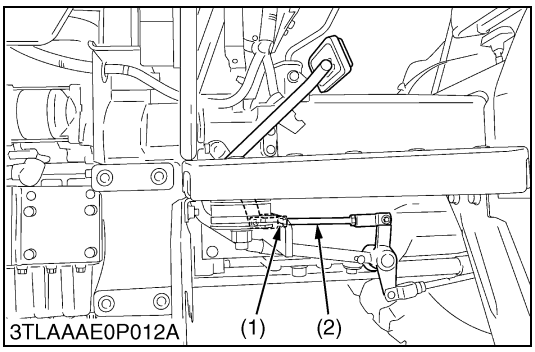

Clutch Pedal Free Travel

■ Adjustment 1

1. Stop the engine and remove the key.
2. Slightly depress the clutch pedal and measure free travel at top of pedal stroke.
3. If adjustment is needed, loosen the lock nut (1), and turn the turnbuckle (2) to adjust the clutch pedal free play within factory specification.
4. Retighten the lock nut (1).

Clutch pedal free travel	Factory spec.	20 to 30 mm 0.8 to 1.2 in.

(1) Lock Nut (2) Turnbuckle

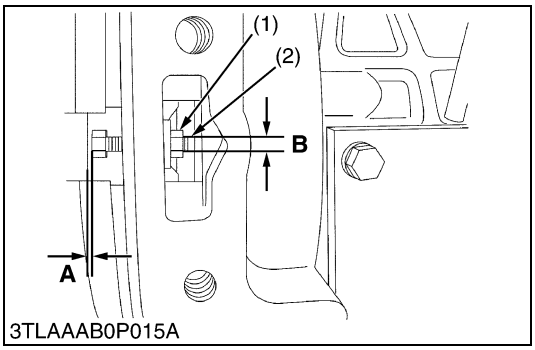

■ Adjustment 2 [Clearance between Pressure 2 and Adjusting Bolt]

1. At first adjust the clutch pedal free travel, as is mentioned above.
2. Remove the cover located on the right side of flywheel housing case.
3. Loosen the lock nut (1), tighten the adjust bolt (2) by using 6 mm spanner until head of the bolt contacts pressure plate slightly. Make 3/4 turn counterclockwise to give 0.9 to 1.0 mm (0.035 to 0.039 in.) clearance.
4. Tighten the lock nut (1), holding the adjusting bolt (2).
5. Turn the flywheel to adjust the clearance of other adjusting bolts (three bolts).
6. Repeat step 3 and readjust clutch pedal free travel if necessary.

Clearance (**A**) between pressure plate and adjusting bolt	Factory spec.	0.9 to 1.0 mm 0.035 to 0.039 in.

Tightening torque	Lock nut	15.7 to 21.6 N·m 1.6 to 2.2 kgf·m 11.6 to 15.9 ft-lbs

(1) Lock Nut
(2) Adjusting Bolt

A : Clearance between pressure plate 2 and adjusting bolt
B : 6 mm (0.24 in.)

W1031368

[3] CHECK POINTS OF EVERY 50 HOURS

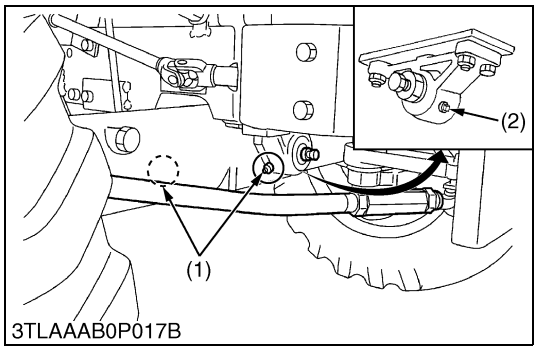

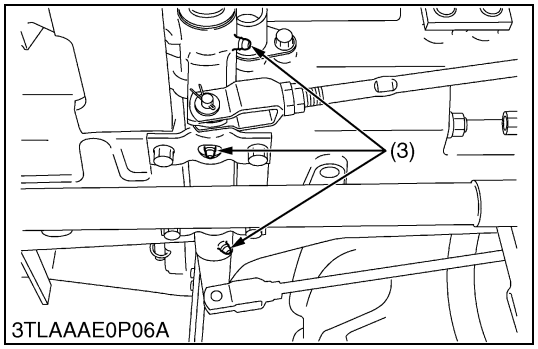

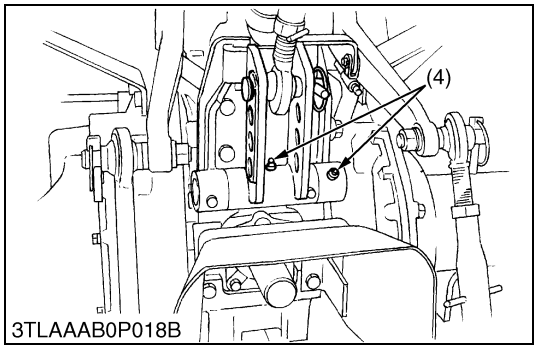

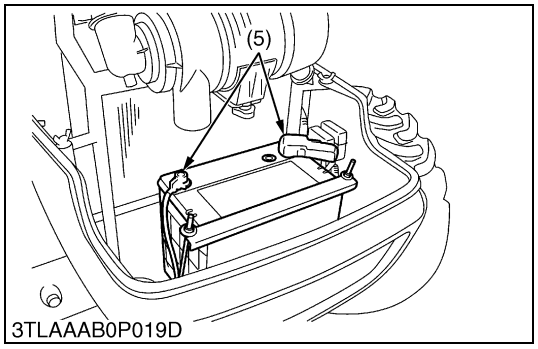

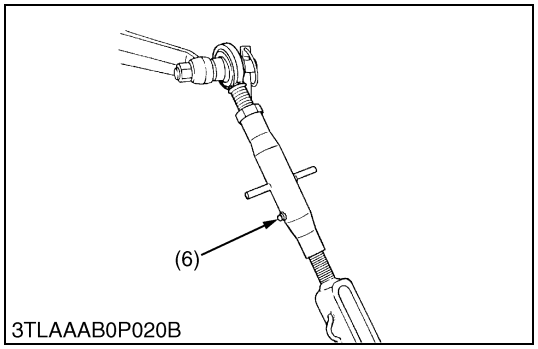

Greasing

1. Apply a grease to the following position as figures.

■ **NOTE**

- **Apply a small amount of multipurpose grease to the following points every 50 hours.**
  If you operated the machine in extremely wet and muddy conditions, lubricate grease fittings more often.
- **When applying a grease to the front axle support, remove the breather plug and apply a grease until grease overflows from breather plug. After greasing reinstall the plug.**

(1) Grease Fitting (Front Axle Support)
(2) Breather Plug
(3) Grease Fitting (Pedal Shaft)
(4) Grease Fitting (Top Link Bracket, Draft Control)
(5) Battery Terminal
(6) Grease Fitting (Lifting Rod (RH))

W1031719

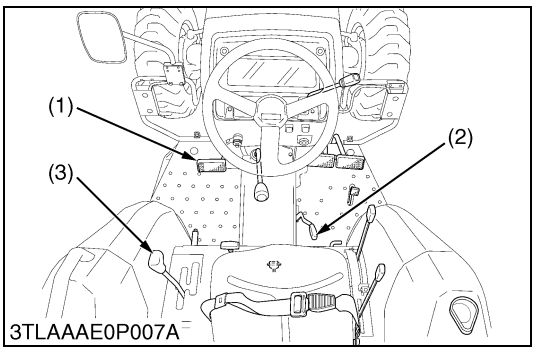

Checking Engine Start System

CAUTION

- **Do not allow anyone near the tractor while testing.**
- **If the tractor does not pass the test do not operate the tractor.**

■ **Preparation before testing**

1. Place all control levers in the **"NEUTRAL"** position.
2. Set the parking brake and stop the engine.

■ **Test : Switch for the range gear shift lever**

1. Sit on the operator's seat.
2. Shift the range gear shift lever to **"L"**, **"H"** or **"R"** position.
3. Depress the clutch pedal fully.
4. Disengage the PTO gear shift lever.
5. Turn the key to **"START"** position.
6. The engine must not crank.

■ **Test : Switch for the PTO gear shift lever**

1. Sit on the operator's seat.
2. Engage the PTO gear shift lever.
3. Depress the clutch pedal fully.
4. Shift the range gear shift lever to **"NEUTRAL"** position.
5. Turn the key to **"START"** position.
6. The engine must not crank.

(1) Clutch Pedal
(2) PTO Gear Shift Lever
(3) Range Gear Shift Lever

W1031944

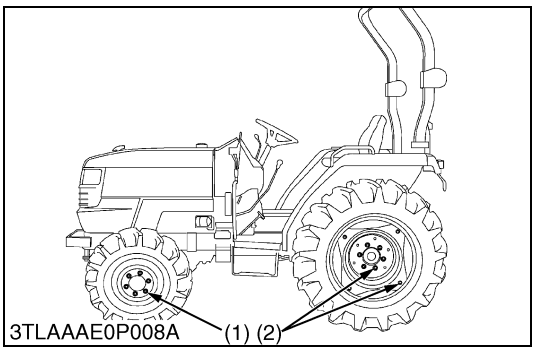

Checking Wheel Mounting Screws and Nuts Tightening Torque

CAUTION

- **Never operate tractor with a loose rim, wheel or axle.**
- **Any time screws and nuts are loosened, retighten to specified torque.**
- **Check all screws and nuts frequently and keep them tight.**

1. Check the wheel mounting screws and nuts regularly especially when new. If there are loosened, tighten as follows.

Tightening torque	Front wheel mounting screw and nut or lug nut	137 N·m 14.0 kgf·m 100 ft-lbs
	Rear wheel mounting screw and nut	215 N·m 22.0 kgf·m 160 ft-lbs

(1) Front Wheel Mounting Screw and Nut or Lug Nut
(2) Rear Wheel Mounting Screw and Nut

W1033386

[4] CHECK POINT OF EVERY 100 HOURS

Changing Engine Oil

1. See page G-6.

W1033621

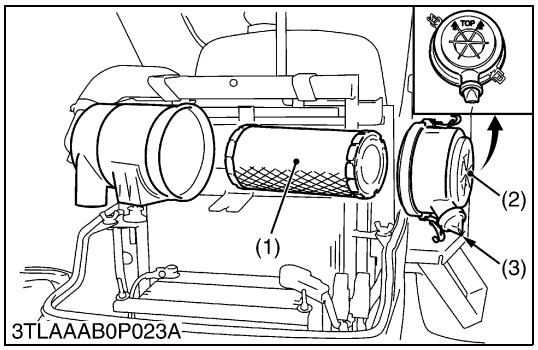

Cleaning Air Cleaner Element

1. Remove the element (1).
2. Clean the element :
- When dry dust adheres to the element, blow compressed air from the inside turning the element. Pressure of compressed air must be under 205 kPa (2.1 kgf/cm^2, 30 psi)
- When carbon or oil adheres to the element, soak the element in detergent for 15 minutes then wash it several times in water, rinse with clean water and dry it naturally. After element is fully dried, inspect inside of the element with a light and check if it is damaged or not. (Referring to the instructions on the label attached to the case.)
3. Replace the air cleaner element (1) :
   Once a yearly or after every six times of cleaning, whichever comes first.

■ **NOTE**
- **Check to see if the evacuator valve (3) is blocked with dust.**

■ **IMPORTANT**
- **The air cleaner uses a dry element, never apply oil.**
- **Do not run the engine with filter element removed.**
- **Be sure to refit the dust cup with the arrow ↑ (on the rear) upright. If the dust cup is improperly fitted, dust passes by the baffle and directly adheres to the element.**

■ **Evacuator Valves (3)**

Open the evacuator valve once a week under ordinary conditions or daily when used in a dusty place to get rid of large particles of dust and dirt.

(1) Air Cleaner Element
(2) Cover
(3) Evacuator Valve

W1033675

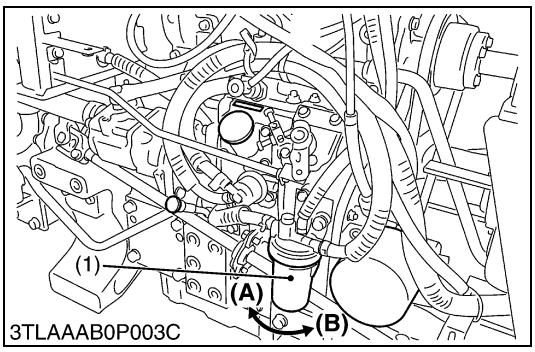

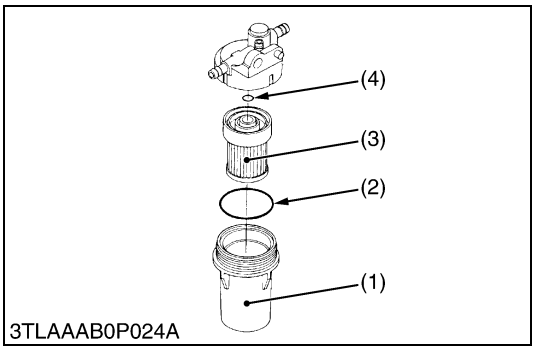

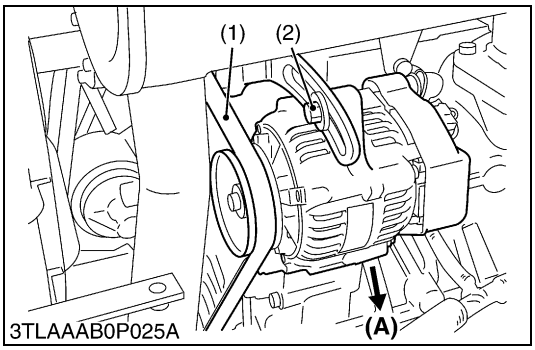

Cleaning Fuel Filter

This job should not be done in the field, but in a clean place.

1. Loosen and remove the filter bowl, and rinse the inside with a suitable cleaning fluid.
2. Take out the element and dip it in the kerosene to rinse.
3. After cleaning, reassemble the fuel filter, keeping out dust and dirt.
4. Bleed the fuel system. (See **"SERVICE AS REQUIRED"** in Periodic service section.)

■ **IMPORTANT**

- **When the fuel filter bowl has been removed, fuel stops flowing from the fuel tank. If the fuel tank is almost full, however, the fuel will flow back from the fuel return pipe to the fuel filter. Before checking, make sure the fuel tank is less than half-full.**

(1) Fuel Filter Bowl
(2) O-ring
(3) Filter Element
(4) O-ring

(A) "LOOSEN"
(B) "TIGHTEN"

W1034172

Adjusting Fan Belt Tension

CAUTION

- **Be sure to stop the engine before checking fan belt tension.**

1. Stop the engine and remove the key.
2. Apply moderate thumb pressure to belt between pulleys.
3. If tension is incorrect, loosen the alternator mounting bolts (2), and using a lever placed between the alternator and the engine block, pull the alternator out until the deflection of the belt falls within the factory specifications.
4. Replace fan belt if it is damaged

Fan belt tension	Factory spec.	A deflection of between 7 to 9 mm (0.28 to 0.34 in.) when the belt is pressed in the middle of the span

(1) Check Part of Belt Tension
(2) Alternator Mounting Bolt

(A) To Tighten the Fan Belt

W1034711

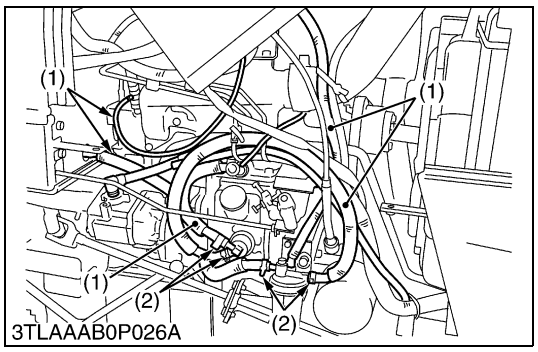

Checking Fuel Line

CAUTION

- **Stop the engine when attempting the check and change prescribed below.**
- **Remember to check the fuel line periodically. The fuel line is subject to wear and deterioration over time, fuel may leak out onto the running engine, causing a fire.**

1. Check to see that all line and hose clamps are tight and not damaged.
2. If hoses and clamps are found worn or damaged, replace or repair them at once.

■ **NOTE**

- **If the fuel line is removed, be sure to property bleed the fuel system.**
  Refer to "Bleeding Fuel System". (See page G-29.)

(1) Fuel Line (2) Clamp Band

W1035367

Adjusting Clutch Pedal Free Travel

1. See page G-15.

W1035519

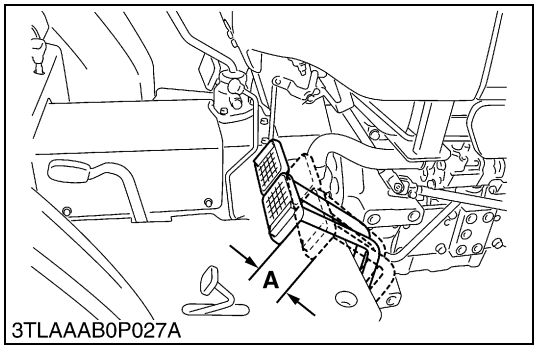

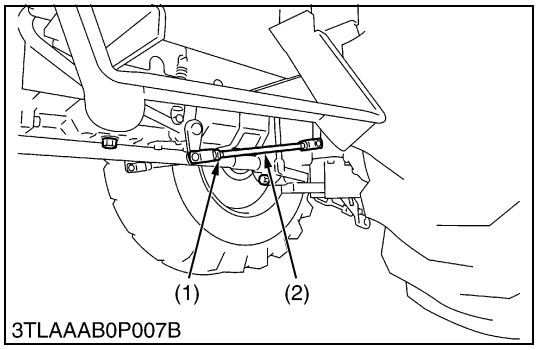

Adjusting Brake Pedal Free Travel

1. Stop the engine and remove the key, then release the parking brake.
2. Slightly depress the brake pedals and measure free travel (**A**) at top of pedal stroke.
3. If adjustment is needed, loosen the lock nut (1) and turn the turnbuckle (2) to adjust the rod length.
4. Retighten the lock nut (1).
5. Other side same as above.

Brake pedal free travel	Factory spec.	15 to 20 mm (0.6 to 0.8 in.) on the pedal
		Keep the free travel in the right and left brake pedals equal

(1) Lock Nut
(2) Turnbuckle

A : Free Travel

W1035572

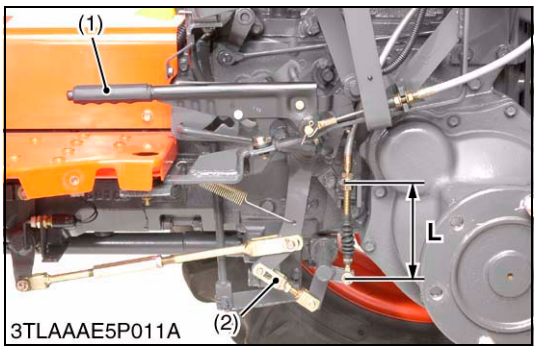

Parking Brake Cable

CAUTION

- **Stop the engine and remove the key, then chock the wheel before checking brake pedals.**

1. Check and adjust brake pedals as shown above.
2. Release parking brake lever (1). Confirm that there is the same free play in right and left parking brake links (2).
   If there is no free play, adjust parking brake links (2) so as to have the same free play.
3. Set parking brake lever at first notch. Maker sure that there is no free play in parking brake links (both sides).
4. Adjust parking brake cable if there is free play in parking brake links (2).

(Reference)

Parking brake cable adjusting dimension (**L**)	Factory spec.	125 to 130 mm 4.92 to 5.12 in.

(1) Parking Brake Lever (2) Parking Brake Links

W1084482

https://truckmanualshub.com/

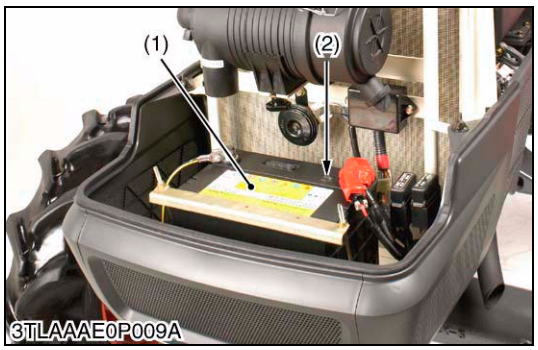

Checking Battery Condition

CAUTION

- **Do not use or charge the refillable type battery if the fluid level is below the LOWER (lower limit level) mark. Otherwise, the battery component parts may prematurely deteriorate, which may shorten the battery's service life or cause an explosion. Check the fluid level regularly and add distilled water as required so that the fluid level is between the UPPER and LOWER levels.**

CAUTION

- **Never remove the vent plugs while the engine is running.**
- **Keep electrolyte away from eyes, hands and clothes. If you are splashed with it, wash it away completely with water immediately and get medical attention.**
- **Wear eye protection and rubber gloves when working around battery.**

■ **NOTE**

- **The factory-installed battery is of non-refillable type. If the indicator turns white, do not charge the battery but replace it with new one.**

1. Mishandling the battery shortens the service life and adds to maintenance costs.
2. The original battery is maintenance free type battery, but needs some servicing.
   If the battery is weak, the engine is difficult to start and the lights will be dim. It is important to check the battery periodically.
3. Check the battery condition by reading the indicator.
   State of indicator display :
   Green : Specify gravity of electrolyte and quality of electrolyte are both in good condition.
   Black : Need to charge the battery.
   White : battery needs to be replaced.
   Check the battery condition by reading the indicator.

State of indicator display	
Green	Specific gravity of electrolyte and quality of electrolyte are both in good condition.
Black	Needs to charge the battery.
White	Battery needs to be replaced.

(1) Battery (2) Indicator

W1035975

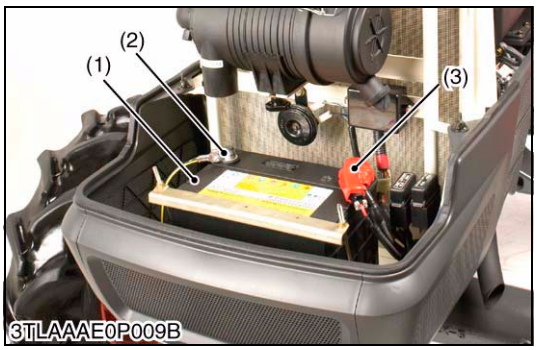

Battery Charging

CAUTION

- **When the battery is being activated, hydrogen and oxygen gases in the battery are extremely explosive. Keep open sparks and flames away from the battery at all times, especially when charging the battery.**
- **When charging the battery, ensure the vent caps are securely in place (if equipped).**
- **When disconnecting the cable from the battery, start with the negative terminal first.**
  When connecting the cable to the battery, start with the positive terminal first.
- **Never check battery charge by placing a metal object across the posts.**
  Use a voltmeter or hydrometer.

1. To slow charge the battery, connect the battery positive terminal to the charger positive terminal and the negative to the negative, then recharge in the normal way or as directed in the battery charger users manual.
2. A boost charge is only for emergencies. It will partially charge the battery at a high rate and in a short time.
   When using a boost-charged battery, it is necessary to recharge the battery as early as possible.
   Failure to do this will shorten the battery's service life.
3. The battery is charged if the indicator display turns green from black.
4. When exchanging an old battery into new one, use battery of equal specification shown in table 1.

Table 1

Battery Type	Volts (V)	Reserve Capacity (min.)	CCA (SAE)	Normal Charging Rate (A)
75D26R	12	123	490	6.5

CCA : Cold Cranking Ampere

■ Direction for Storage

1. When storing the tractor for long periods of time, remove the battery from tractor, adjust the electrolyte to the proper level and store in a dry place out of direct sunlight.
2. The battery self-discharges while it is stored.
   Recharge it once every three months in hot seasons and once every six months in cold seasons.

(1) Battery
(2) Battery Negative Terminal
(3) Battery Positive Terminal

W1036354

https://truckmanualshub.com/

[5] CHECK POINTS OF EVERY 200 HOURS

Replacing Engine Oil Filter Cartridge

1. See page G-11.

W1037936

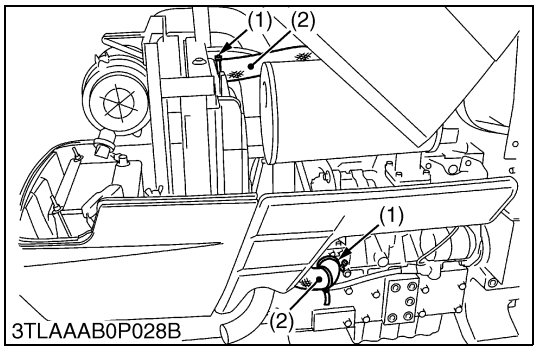

Checking Radiator Hose and Hose Clamp

Check to see if radiator hoses are properly fixed every 200 hours of operation or six months, whichever comes first.

1. If loose or water leaks, tighten hose clamps (2) securely.
2. Replace hoses and hose clamps every 2 years or earlier if checked and found that hoses are swollen, hardened or cracked.

■ **Precaution at Overheating**

Take the following actions in the event the coolant temperature be nearly or more than the boiling point, this is called **"Overheating"**.

1. Stop the machine operation in a safe place and keep the engine unloaded idling.
2. Don't stop the engine suddenly, but stop it after about 5 minutes of unloaded idling.
3. Keep yourself well away from the machine for further 10 minutes or while the steam blown out.
4. Check that there is no danger of scalding or buming due to excess heat and then determine the cause of and resolve the overheating according to the manual, see **"TROUBLESHOOTING"** section, and then start again the engine.

(1) Clamp (2) Radiator Hose

W1037986

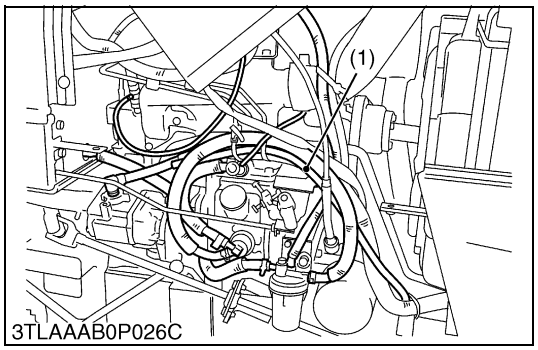

Checking Power Steering Oil Line

1. Check to see that all lines and hose clamps are tight and not damaged.
2. If hose and clamps are found worn or damaged, replace or repair them at once.

(1) Power Steering Pressure Hose

W1038315

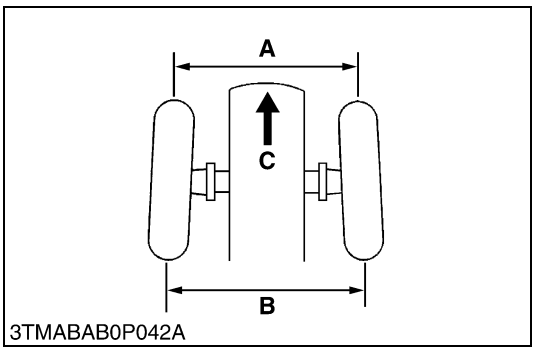

3TMABAB0P042A

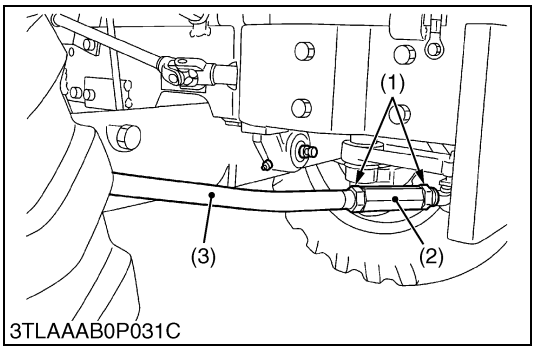

3TLAAAB0P031C

Adjusting Toe-in

1. Park the tractor on the flat place.
2. Inflate the tires to the specified pressure.
3. Turn steering wheel so front wheels are in the straight ahead position.
4. Lower the implement, lock the parking brake and stop the engine.
5. Measure distance between tire beads at front of tire, hub height.
6. Measure distance between tire beads at rear of tire, hub height.
7. Front distance should be 2 to 8 mm (0.079 to 0.315 in.) less than rear distance.
8. If the measurement is not within the factory specifications, adjust by changing the tie-rod length.

Toe-in (**(B)** - **(A)**)	Factory spec.	2 to 8 mm 0.079 to 0.315 in.

■ Adjusting

1. Loosen the lock nut (1) and turn the turnbuckle (2) to adjust the tie-rod length until the proper toe-in measurement is obtained.
2. Retighten the lock nut (1).

Tightening torque	Tie-rod lock nut	166.7 to 196.1 N·m 17.0 to 20.0 Kgf·m 123 to 145 ft-lbs

■ IMPORTANT

- **A right and left tie-rod joint is adjusted to the same length.**

(1) Lock Nut
(2) Turnbuckle
(3) Tie-rod

(A) Wheel to Wheel Distance at Front
(B) Wheel to Wheel Distance at Rear
(C) Front

W1038470

https://truckmanualshub.com/

[6] CHECK POINTS OF EVERY 400 HOURS

Changing Transmission Fluid

1. See page G-12.

W1039932

Replacing Fuel Filter Element

1. See page G-19.

W1039982

Changing Front Axle Case Oil

1. See page G-14.

W1040022

[7] CHECK POINTS OF EVERY 600 HOURS

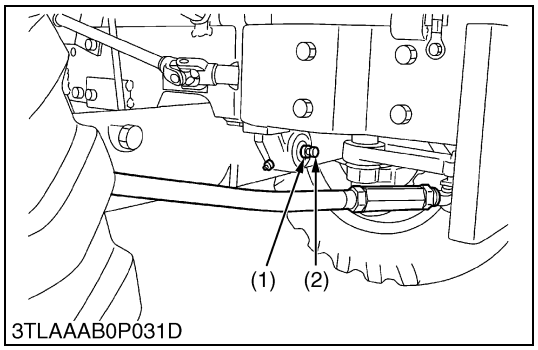

Adjusting Front Axle Pivot

1. Loosen the lock nut (1), tighten the adjusting screw (2) all the way, and then loosen the adjusting screw (2) by 1/6 turn.
2. Retighten the lock nut (1).

(1) Lock Nut (2) Adjusting Screw

W1040077

[8] CHECK POINT OF EVERY 800 HOURS

Checking Valve Clearance

1. See page 1-S11.

W1040181

[9] CHECK POINT OF EVERY 1 YEAR

Replacing Air Cleaner Element

1. See page G-18.

W1040246

https://truckmanualshub.com/

[10] CHECK POINTS OF EVERY 2 YEARS

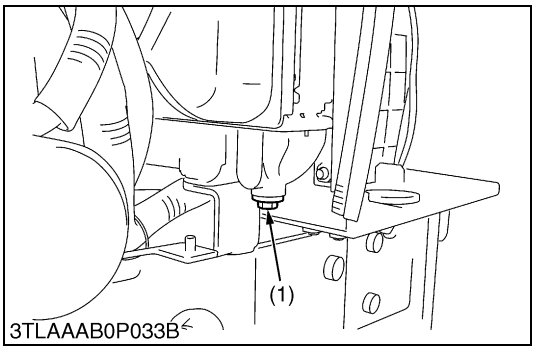

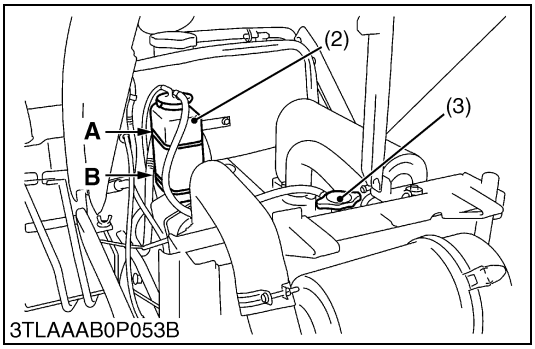

Flush Cooling System and Changing Coolant

CAUTION

- **Do not remove the radiator cap when the engine is hot. Then loosen cap slightly to the stop to relieve any excess pressure before removing cap completely.**

1. Stop the engine and let cool down.
2. To drain the coolant, open the radiator drain plug (1) and remove radiator cap (3). The radiator cap (3) must be removed to completely drain the coolant.
3. After all coolant is drained, close the drain plug (1).
4. Fill with clean water and cooling system cleaner.
5. Follow directions of the cleaner instruction.
6. After flushing, fill with clean water and anti-freeze until the coolant level is just below the radiator cap. Install the radiator cap securely.
7. Fill with fresh water up to the **"FULL"** mark on the recovery tank.
8. Start and operate the engine for a few minutes.
9. Stop the engine and let cool.
10. Check coolant level of recovery tank and add coolant if necessary.

■ **IMPORTANT**

- **Do not start engine without coolant.**
- **Use clean, fresh water and anti-freeze is mixed with water, the anti-freeze mixing ratio must be less than 50 %.**
- **Securely tighten radiator cap (3). If the cap is loose or improperly fitted, water may leak out and the engine could overheat.**

■ **Anti-Freeze**

If coolant freezes, the cylinders and radiator can be damaged. It is necessary, if the ambient temperature falls below 0 °C (32 °F), to remove coolant mix it with anti-freeze and fill the radiator with it.

1. There are two types of anti-freeze available; use the permanent type (PT) for this engine.
2. Before adding anti-freeze for the first time, clean the radiator interior by pouring fresh water and draining it a few times.
3. The procedure for mixing of water and anti-freeze differs according to the maker of the anti-freeze and the ambient temperature, basically should be referred to SAE J1034, more specifically also to SAE J814c
4. Mix the anti-freeze with water, and then fill in to the radiator.

Vol % Anti-freeze	Freezing Point		Boiling Point *	
	°C	°F	°C	°F
40	-24	-12	106	222
50	-37	-34	108	226

* At 10 kPa (760 mm Hg) pressure (atmospheric). A higher boiling point is obtained by using a radiator pressure cap which permits the development of pressure within the cooling system.

■ **NOTE**

- **The above data represent industry standards that necessitate a minimum glycol content in the concentrates anti-freeze.**
- **When the coolant level drops due to evaporation, add water only. In case of leakage, add anti-freeze and water in the specified mixing ratio.**
- **Anti-freeze absorbs moisture. Keep unused anti-freeze in a tightly sealed container.**
- **Do not use radiator cleaning agents when anti-freeze has been added to the coolant. (Anti-freeze contains an anti-corrosive agent, which will react with the radiator cleaning agent forming sludge which will affect the engine parts.)**

Coolant (radiator)	Capacity	6.0 L 6.3 U.S.qts 5.3 Imp.qts
Coolant (recovery tank)		0.6 L 0.63 U.S.qts 0.53 Imp.qts

(1) Drain Plug
(2) Recovery Tank
(3) Radiator Cap

A : "FULL"
B : "LOW"

W1040304

Replacing Fuel Hose

1. Replace the fuel hoses and clamps.
   Refer to **"Checking Fuel Line"**. (See page G-20.)

W1041643

Replacing Radiator Hose (Water Pipes)

1. Replace the hoses and clamps.
   Refer to **"Checking Radiator Hose and Hose Clamp"**. (See page G-24.)

W1041698

Replacing Power Steering Hose

1. Replace the hoses and clamps. (See "Checking Power Steering Line" in every 200 hours maintenance.)

W1041752

[11] OTHERS

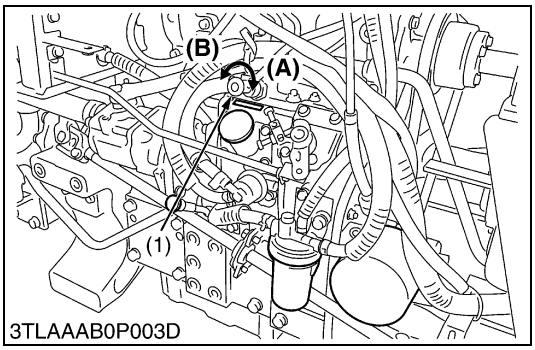

Bleeding Fuel System

Air must be removed :

1. When the fuel filter or lines are removed.
2. When tank is completely empty.
3. After the tractor has not been used for a long period of time.

CAUTION

- **Do not bleed the fuel system when the engine is hot.**

Bleeding procedure is as follows :

1. Fill the fuel tank with fuel.
2. Open the air vent cock (1) on the fuel injection pump.
3. Close the air vent cock (1) after 30 seconds.

IMPORTANT

- **Always close the air vent cock (1) except for bleeding fuel lines.**
  Otherwise, Engine runs irregularly or stalls frequently.

(1) Air Vent Plug
(A) CLOSE
(B) OPEN

W1041811

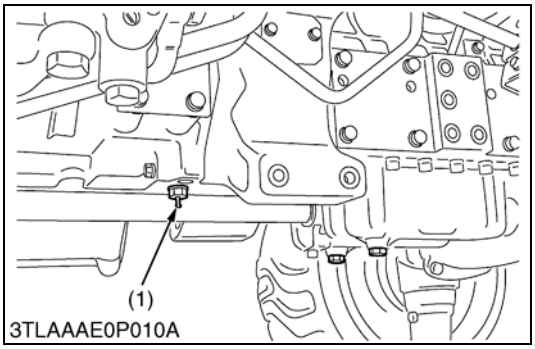

Draining Clutch Housing Water

NOTE

- **The tractor is equipped with split pin plug (1) under the clutch housing.**
- **After operating in rain, snow or tractor has been washed, water may get into the clutch housing.**

1. Check it by pushing in the split pin (1).
2. If water enters into the clutch housing, remove the plug (1) and drain the water, then reinstall the plug.

(1) Split Pin (Plug)

W1041999

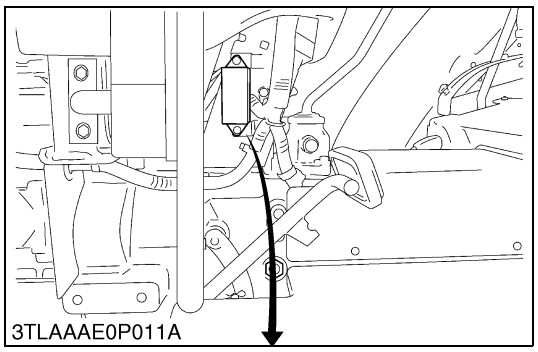

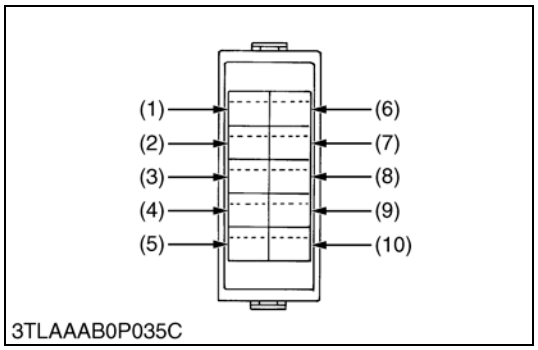

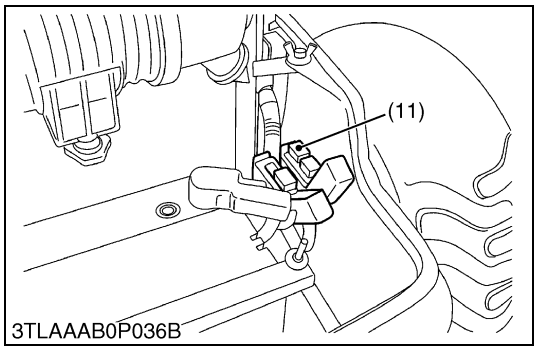

Replacing Fuse

1. The tractor electrical system is protected from potential damage by fuses.
   A blown fuse indicates that there is an overload or short somewhere in the electrical system.
2. If any of the fuses should blow, replace with a new one of the same capacity.

■ **IMPORTANT**

- **Before replacing a blown fuse, determine why the fuse blew and make any necessary repairs. Failure to follow this procedure may result in serious damage to the tractor electrical system. Refer to troubleshooting section of this manual.**
  If any of them should below, replace with a new one of the same capacity.

Fuse No.	Capacity (A)	Protected circuit
(1)	10	Work light
(2)	10	Panel
(3)	5	Lamp relay
(4)	5	Glow lamp
(5)	5	Starter relay
(6)	25	Head light
(7)	20	Flasher
(8)	5	Key stop
(9)	10	Position lamp
(10)	20	Hazard
(11)	Slow blow fuse	Check circuit against wrong battery connection.

W1039315

Replacing Light Bulb

1. Head lights and rear combination lights :
   Take the bulb out of the light body and replace with a new one.
2. Other lights :
   Detach the lens and replace the bulb.

Light	Capacity
Head lights	45 W / 40 W
Tail light	10 W
Hazard and turn signal light (rear)	21 W
Hazard and turn signal light (front)	21 W
Side marker light	5 W
Instrument panel light	1.7 W
Brake stop light	21 W
Number plate light	10 W

W1039659

https://truckmanualshub.com/

8. SPECIAL TOOLS

[1] SPECIAL TOOLS FOR ENGINE

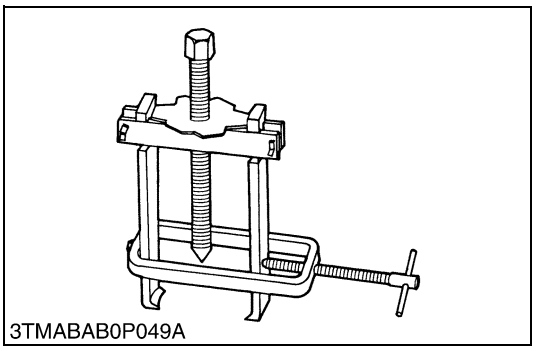
3TMABAB0P049A

Special Use Puller Set

Code No : 07916-09032

Application : Use exclusively for pulling out bearing, gears and other parts with ease.

W10240500

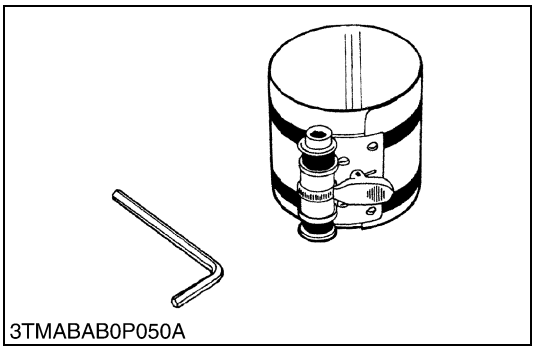
3TMABAB0P050A

Piston Ring Compressor

Code No : 07909-32111

Application : Use exclusively for pushing in the piston with piston rings into the cylinder.

W10241000

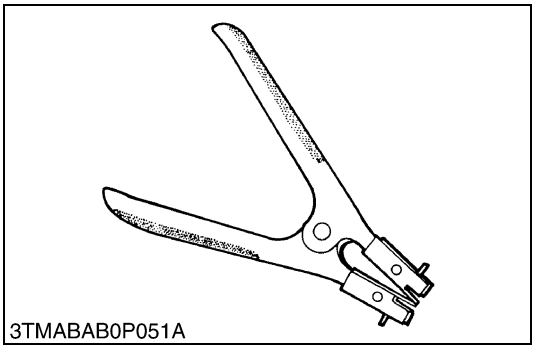
3TMABAB0P051A

Piston Ring Tool

Code No : 07909-32121

Application : Use exclusively for removing or installing the piston ring with ease.

W10241500

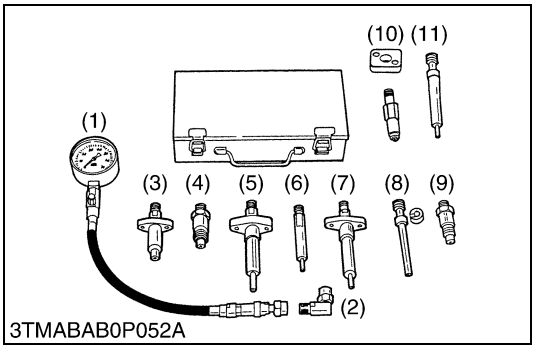

3TMABAB0P052A

Diesel Engine Compression Tester

Code No : 07909-30208 (Assembly)07909-31251 (G)
07909-30934 (A to F)07909-31271 (I)
07909-31211 (E and F)07909-31281 (J)
07909-31231 (H)

Application : Use to measure diesel engine compression and diagnostics of need for major overhaul.

(1) Gauge
(2) **L** Joint
(3) Adaptor **A**
(4) Adaptor **B**
(5) Adaptor **C**
(6) Adaptor **E**
(7) Adaptor **F**
(8) Adaptor **G**
(9) Adaptor **H**
(10) Adaptor **I**
(11) Adaptor **J**

W10242000

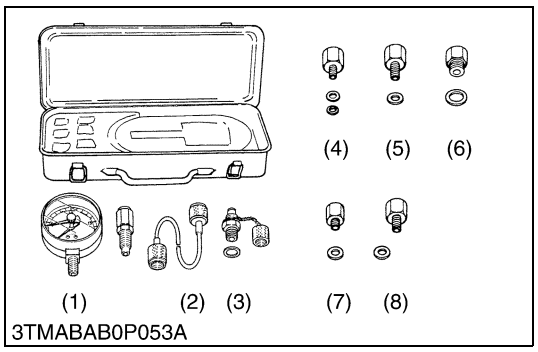

Oil Pressure Tester

Code No : 07916-32032
Application : Use to measure lubricating oil pressure.

(1) Gauge
(2) Cable
(3) Threaded Joint
(4) Adaptor **1**
(5) Adaptor **2**
(6) Adaptor **3**
(7) Adaptor **4**
(8) Adaptor **5**

W10243180

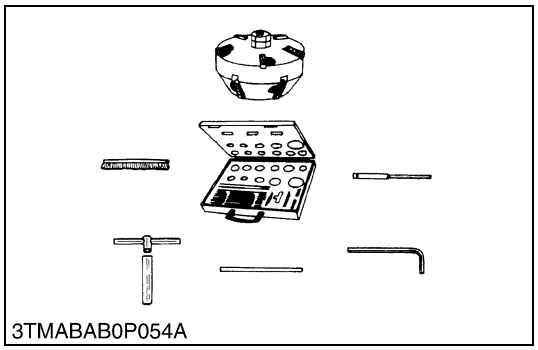

Valve Seat Cutter

Code No : Use to reseat valves.
Application : Use to reseat valves.
Angle: 0.785 rad (45°)
0.262 rad (15°)
Diameter: 28.6 mm (1.126 in.) 38.0 mm (1.496 in.)
31.6 mm (1.244 in.) 41.3 mm (1.626 in.)
35.0 mm (1.378 in.) 50.8 mm (2.000 in.)

W10244580

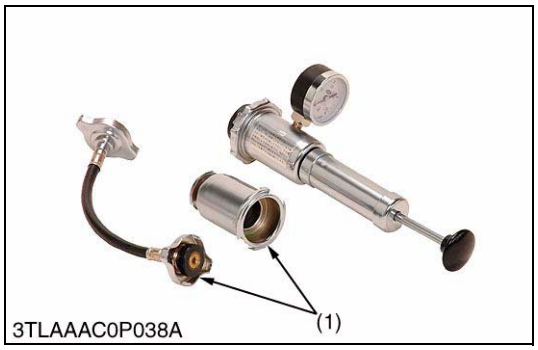

Radiator Tester

Code No : 07909-31551
Application : Use to check of radiator cap pressure, and leaks from cooling system.
Remarks: Adaptor (1) BANZAI Code No. RCT-2A-30S

0000000815E0

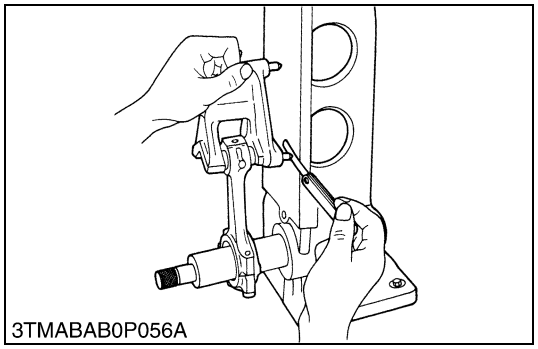

Connecting Rod Alignment Tool

Code No : 07909-31661
Application : Use to check the connecting rod alignment.
Applicable: Connecting rod big end I.D.
range 30 to 75 mm (1.18 to 2.95 in.) dia.
Connecting rod length
65 to 300 mm (2.56 to 11.81 in.)

W10245830

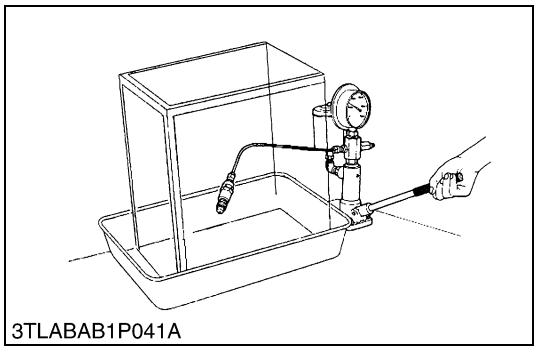

Nozzle Tester

Code No : 07909-31361
Application : Use to check the fuel injection pressure and spray pattern of nozzle
Measuring: 0 to 50 MPa
range: (0 to 500 kgf/cm^2, 0 to 7000 psi)

W10246530

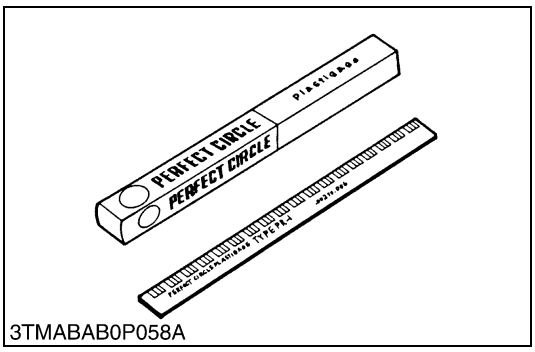

3TMABAB0P058A

Plastigage

Code No : 07909-30241

Application : Use to check the oil clearance between crankshaft and bearing, etc..

Measuring range: Green .... 0.025 to 0.076 mm (0.001 to 0.003 in.)
Red ..... 0.051 to 0.152 mm (0.002 to 0.006 in.)
Blue ..... 0.102 to 0.229 mm (0.004 to 0.009 in.)

W10247190

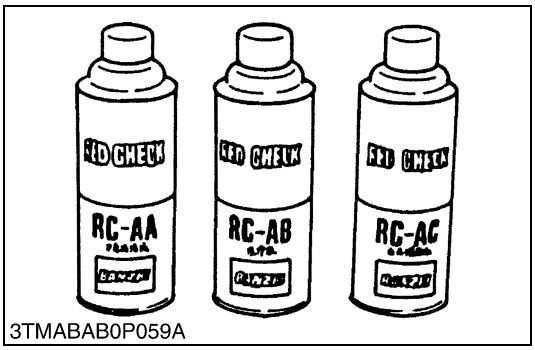

3TMABAB0P059A

Red Check

Code No : 07909-31371

Application : Use to check cracks on cylinder head, cylinder block, etc..

W10249090

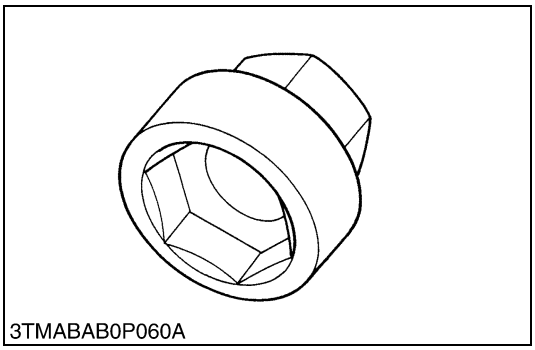
3TMABAB0P060A

Crankshaft Nut Socket 46

Code No : 07916-30821

Application : Use exclusively for removing or installing the crankshaft nut.

W1047906

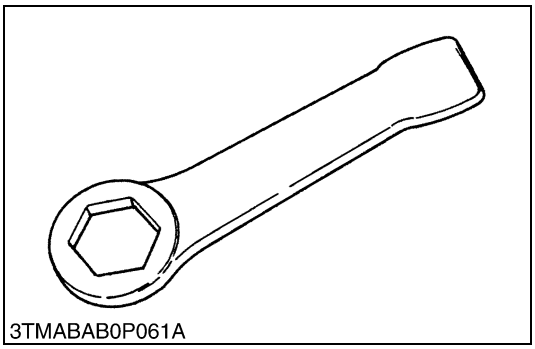
3TMABAB0P061A

Socket Wrench 46

Code No : 07916-30901

Application : Use exclusively for removing or installing the crankshaft nut.

W1048209

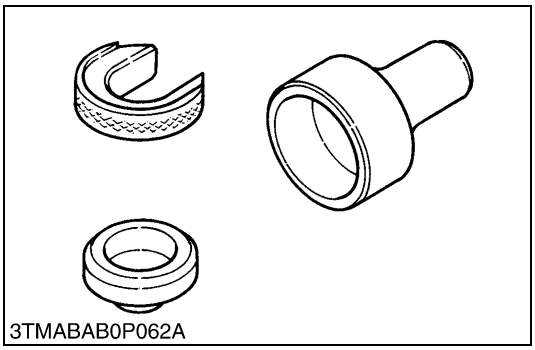
3TMABAB0P062A

Auxiliary Socket for Fixing Crankshaft Sleeve

Code No : 07916-32091

Application : Use to fix the crankshaft sleeve of the diesel engine.

W1048398

■ **NOTE**

- **The following special tools are not provided, so make them referring to the figure.**

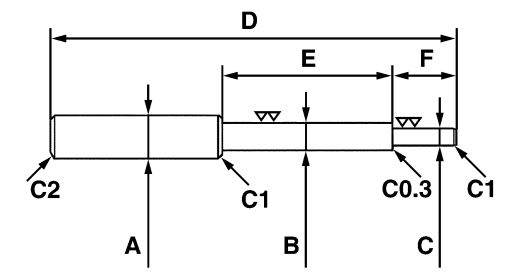

3TMABAB0P063A

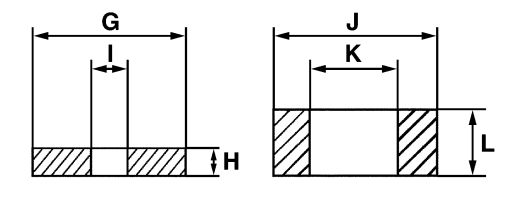

3TMABAB0P064A

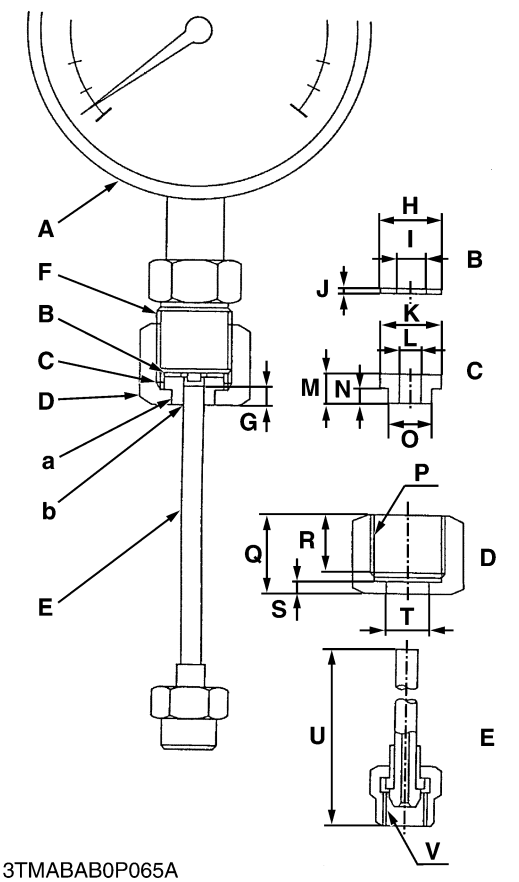

3TMABAB0P065A

Valve Guide Replacing Tool

Application : Use to press out and press in the valve guide.

A	20 mm dia. (0.79 in. dia.)
B	11.7 to 11.9 mm dia. (0.460 to 0.468 in. dia.)
C	6.5 to 6.6 mm dia. (0.256 to 0.259 in. dia.)
D	225 mm (8.86 in.)
E	70 mm (2.76 in.)
F	45 mm (1.77 in.)
G	25 mm (0.98 in.)
H	5 mm (0.197 in.)
I	6.7 to 7.0 mm dia. (0.263 to 0.275 in. dia.)
J	20 mm dia. (0.787 in. dia.)
K	12.5 to 12.8 mm dia. (0.492 to 0.504 in. dia.)
L	8.9 to 9.1 mm (0.350 to 358 in.)
C1	Chamfer 1.0 mm (0.039 in.)
C2	Chamfer 2.0 mm (0.079 in.)
C0.3	Chamfer 0.3 mm (0.012 in.)

W10250170

Injection Pump Pressure Tester

Application : Use to check fuel tightness of injection pumps.

A	Pressure gauge full scale : More than 29.4 MPa (300 kgf/cm^2, 4267 psi)
B	Copper gasket
C	Flange (Material : Steel)
D	Hex. nut 27 mm (1.06 in) across the plat
E	Injection pipe
F	PF 1/2
G	5 mm (0.20 in.)
H	17 mm dia. (0.67 in.dia.)
I	8 mm dia.(0.31 in.dia.)
J	1.0 mm (0.0039 in.)
K	17 mm dia. (0.67 in.dia.)
L	6.10 to 6.20 mm dia.(0.2402 to 0.2441 in.dia)
M	8 mm (0.31 in.)
N	4 mm (0.61 in.)
O	11.97 to 11.99 mm dia.(0.4713 to 0.4721 in.dia.)
P	PF 1/2
Q	23 mm (0.91 in.)
R	17 mm (0.67 in.)
S	4 mm (0.16 in.)
T	12.00 to 12.02 mm dia.(0.4724 to 0.4721 in.dia.)
U	100 mm (3.94 in.)
V	M12 x 1.5
a	Adhesive application
b	Fillet welding on the enter circumference

W1048625

https://truckmanualshub.com/

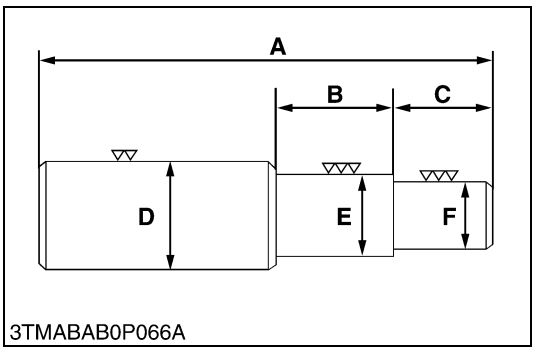

3TMABAB0P066A

Bushing Replacing Tools

Application : Use to press out and to press fit the bushing.

(1) For small end bushing

A	162 mm (6.38 in.)
B	35 mm (1.38 in.)
C	27 mm (1.06 in.)
D	35 mm dia. (1.38 in. dia.)
E	27.90 to 27.95 mm dia. (1.098 to 1.100 in. dia.)
F	25.00 to 25.01 mm dia. (0.984 to 0.985 in. dia.)

(2) For idle gear bushing

A	175 mm (6.89 in.)
B	40 mm (1.57 in.)
C	38 mm (1.49 in.)
D	45 mm dia. (1.77 in. dia.)
E	41.90 to 41.95 mm dia. (1.650 to 1.652 in. dia.)
F	37.95 to 37.97 mm dia. (1.494 to 1.495 in. dia.)

W10255000

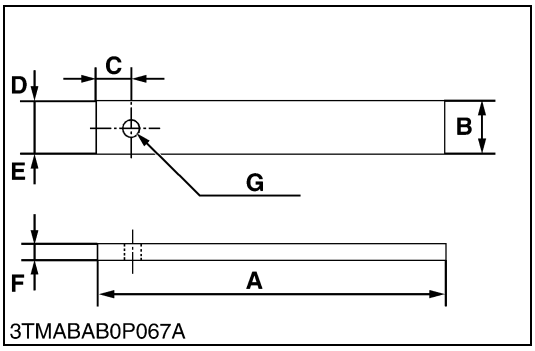

3TMABAB0P067A

Flywheel Stopper

Application : Use to loosen and tighten the flywheel screw.

A	200 mm (7.87 in.)
B	30 mm (1.18 in.)
C	20 mm (0.79 in.)
D	15 mm (0.59 in.)
E	15 mm (0.59 in.)
F	8 mm (0.31 in.)
G	10 mm dia. (0.39 in. dia.)

W10259480

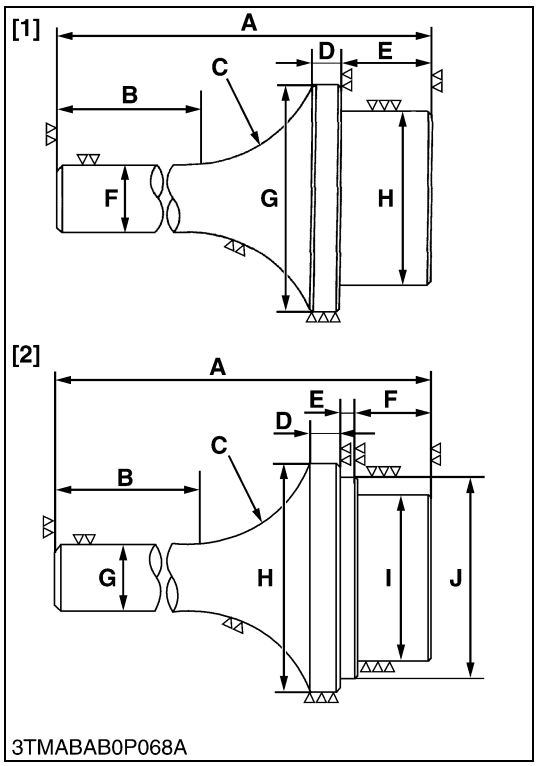

Crankshaft Bearing 1 Replacing Tool

Application : Use to press out and press fit the crankshaft bearing 1.

1. Extracting tool

A	135 mm (5.31 in.)
B	72 mm (2.83 in.)
C	R40 mm (R1.57 in.)
D	10 mm (0.39 in.)
E	20 mm (0.79 in.)
F	20 mm dia. (0.79 in. dia.)
G	56.8 to 56.9 mm dia. (2.236 to 2.240 in. dia.)
H	51.8 to 51.9 mm dia. (2.039 to 2.043 in. dia.)

2. Inserting tool

A	130 mm (5.12 in.)
B	72 mm (2.83 in.)
C	R40 mm (R1.57 in.)
D	9 mm (0.35 in.)
E	4 mm (0.16 in.)
F	20 mm (0.79 in.)
G	20 mm dia. (0.79 in. dia.)
H	68 mm dia. (2.68 in. dia.)
I	51.8 to 51.9 mm dia. (2.039 to 2.043 in. dia.)
J	56.8 to 56.9 mm dia. (2.236 to 2.240 in. dia.)

W10261390

https://truckmanualshub.com/

[2] SPECIAL TOOLS FOR TRACTOR

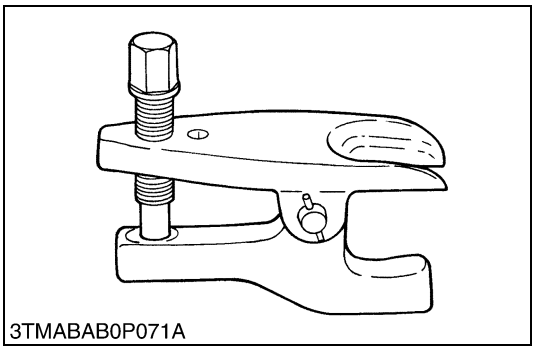
3TMABAB0P071A

Tie-rod End Lifter

Code No : 07909-39051

Application : Use for removing the tie-rod end with ease.

W10264720

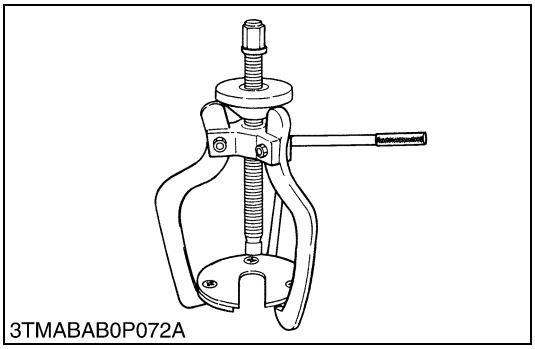
3TMABAB0P072A

Steering Wheel Puller

Code No : 07916-51090

Application : Use for removing the steering wheel without damaging the steering shaft.

W10265330

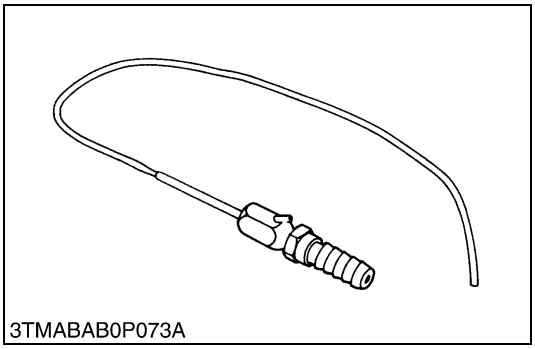
3TMABAB0P073A

Injector CH3

Code No : 07916-52501

Application : Use for injecting calcium chloride solution into, and removing it from, rear and 4WD type front wheel tires.

W10265850

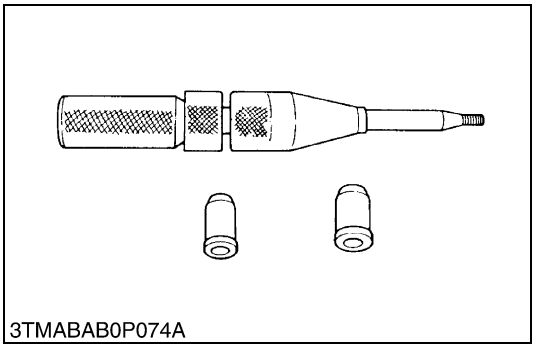
3TMABAB0P074A

Clutch Center Tool (For B and L Series Tractors)

Application : The clutch center tool can be used for all **B** and **L** series tractors with a diaphragm clutch by changing tip guides. Center piece diameter is 20 mm (0.79 in.).

W10266370

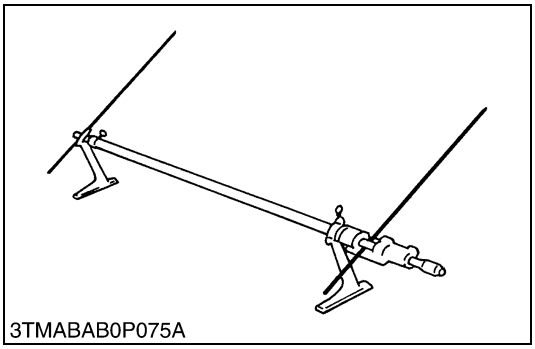
3TMABAB0P075A

Toe-in Gauge

Code No : 07909-31681

Application : This allows easy measurement of toe-in for all machine models.

W10266890

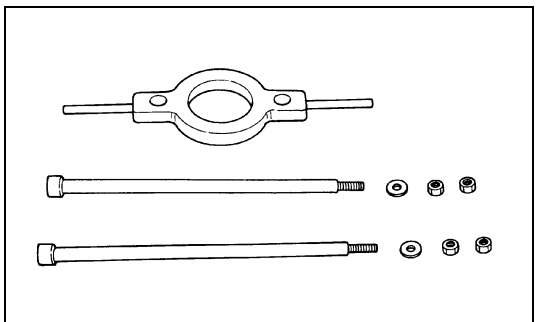
3TMABAB0P076A

Rear Axle Cover Puller

Code No : 07916-51041
Application : Use for removing a rear axle cover from rear axle.

W10769940

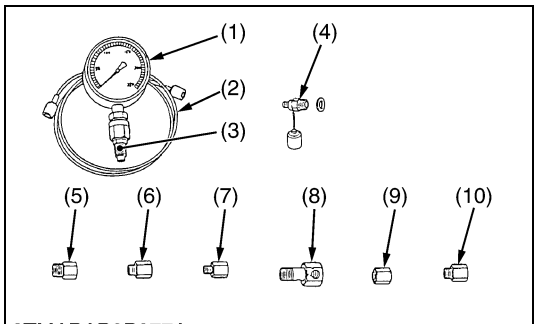

3TMABAB0P077A

Relief Valve Pressure Tester

Code No : 07916-50045
Application : This allows easy measurement of relief set pressure.

(1) Gauge (07916-50322)
(2) Cable (07916-50331)
(3) Threaded Joint (07916-50401)
(4) Threaded Joint (07916-50341)
(5) Adaptor **B** (M18 × P1.5) (07916-50361)
(6) Adaptor **C** (PS3/8) (07916-50371)
(7) Adaptor **D** (PT1/8) (07916-50381)
(8) Adaptor **E** (PS3/8) (07916-50392)
(9) Adaptor **F** (PF1/2) (07916-62601)
(10) Adaptor **58** (PT1/4) (07916-52391)

W10267410

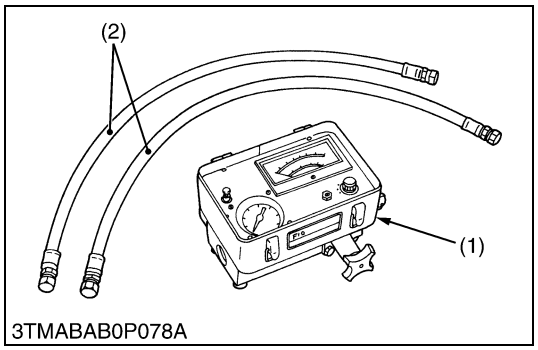

3TMABAB0P078A

Flow Meter

Code No : 07916-52791 (Flow Meter)
07916-52651 (Hydraulic Test Hose)
Application : This allows easy testing of hydraulic system.

(1) Flow Meter
(2) Hydraulic Test Hose

W10313180

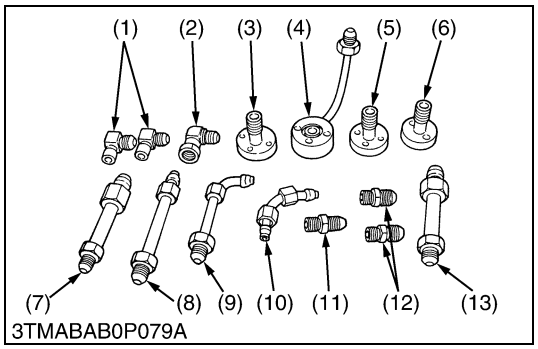

3TMABAB0P079A

Adaptor Set for Flow Meter

Code No : 07916-54031
Application : Use for testing the hydraulic system.

(1) Adaptor **52**
(2) Adaptor **53**
(3) Adaptor **54**
(4) Adaptor **61**
(5) Adaptor **62**
(6) Adaptor **63**
(7) Adaptor **64**
(8) Adaptor **65**
(9) Adaptor **66**
(10) Adaptor **67**
(11) Adaptor **68**
(12) Adaptor **69**
(13) Hydraulic Adaptor **1**

W10313960

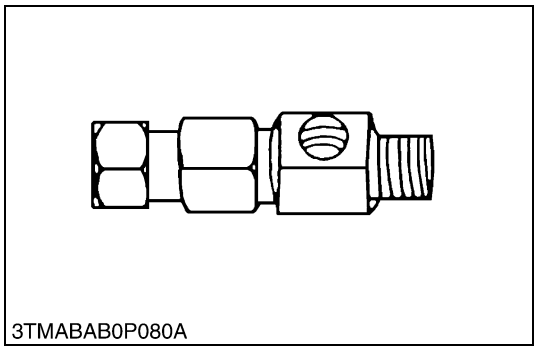
3TMABAB0P080A

Power Steering Adapter

Code No : 07916-54021
Application : Use for measuring the relief valve setting pressure for power steering.

W10442870

https://truckmanualshub.com/

Pump Adaptor

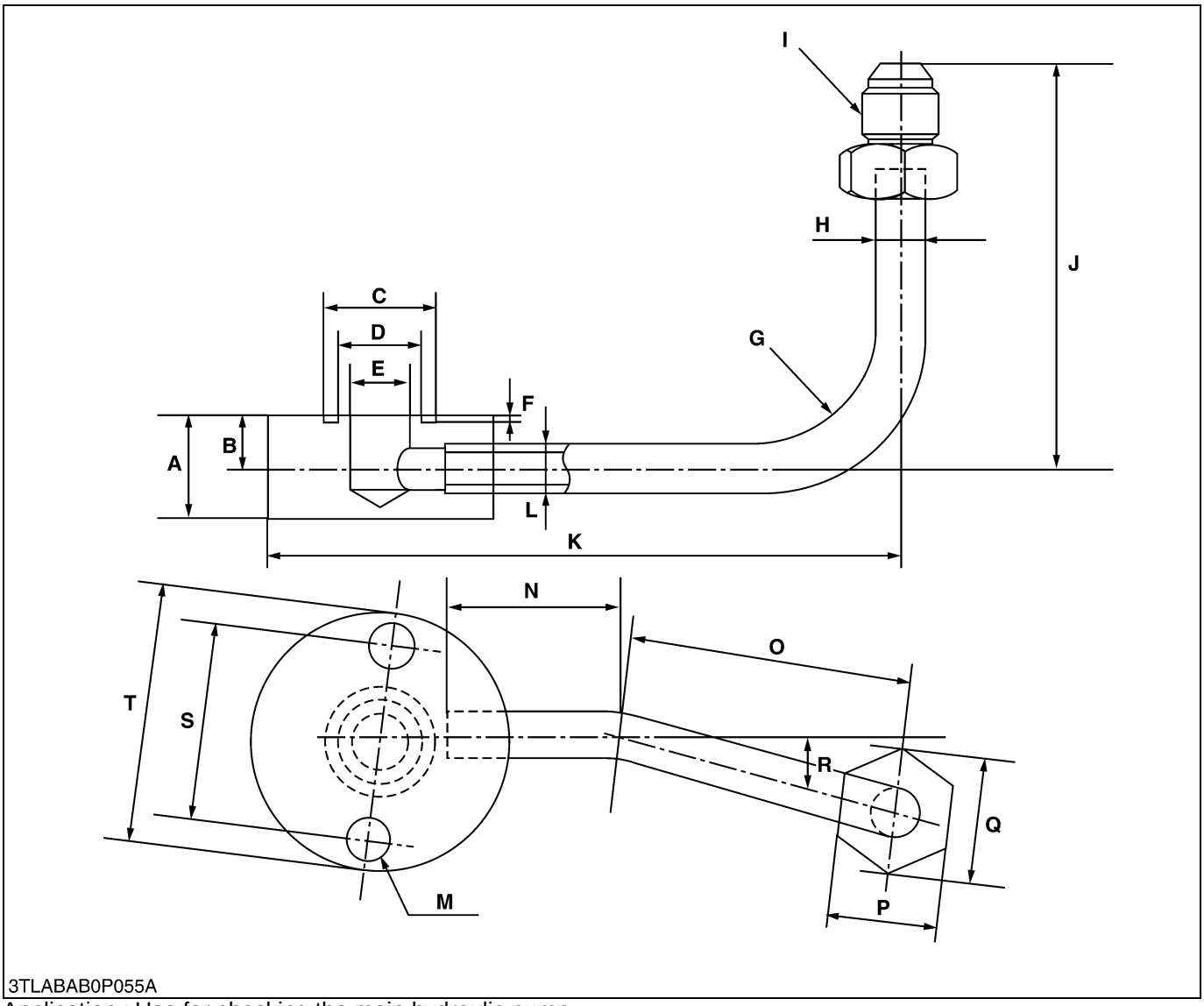

Application : Use for checking the main hydraulic pump.

■ **NOTE**

- **When using, attach with following parts.**
  O-ring : 04811-00180
- **This adaptor is modified from Adaptor 61 of flowmeter adaptor set. (See page G-38).**

A	22 mm (0.872 in.)	**H**	10 mm dia. (0.39 in. dia.)	**O**	61.5 mm (2.42 in.)
B	11 mm (0.437 in.)	**I**	G 3/8	**P**	24 mm (0.94 in.)
C	24 mm dia. (0.94 in. dia.)	**J**	89 mm (3.50 in.)	**Q**	27.7 mm (1.09 in.)
D	18 mm dia. (0.71 in. dia.)	**K**	89 mm (3.50 in.)	**R**	0.244 rad (14°)
E	12 mm dia. (0.47 in. dia.)	**L**	7 mm (0.28 in. dia.)	**S**	40 mm (1.57 in.)
F	1.7 to 1.9 mm (0.067 to 0.075 in.)	**M**	8.5 mm dia. (0.33 in. dia.)	**T**	60 mm dia. (2.36 in. dia.)
G	30 mm Round (1.18 in. Round)	**N**	37 mm (1.46 in.)		

(Reference)

- From size **A** to size **R** are same size as adaptor **61**.

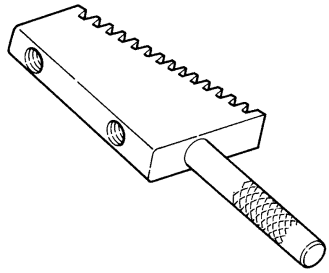

3TMABAB0P081A

Pinion Locking Tool

Code No : 07916-52311

Application : Use for preventing the shaft from turning when removing or tighten a bevel pinion shaft staking nut.

W10445520

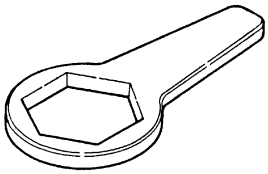

3TMABAB0P082A

Rear Axle Nut Wrench 71

Code No : 07916-52531

Application : Use for removing and installing a rear axle nut.

W10791100

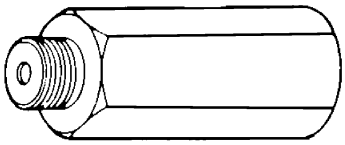

3TMABAB0P083A

Relief Valve Setting Pressure Adaptor G

Code No : 07916-52751

Application : This offers easy measurement of relief valve setting pressure from the hydraulic coupler. This is available with the relief valve setting pressure tester.

W10623960

■ **NOTE**

- **The following special tools are not provided, so make them referring to the figure.**

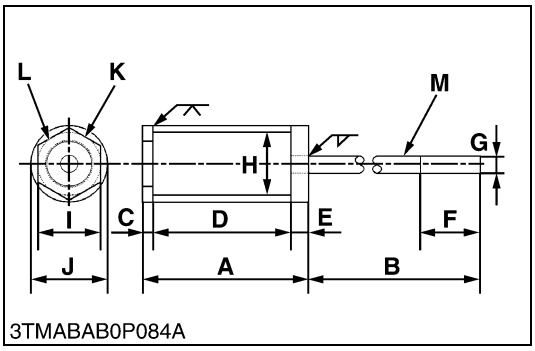

3TMABAB0P084A

Pinion Shaft Remover

Application : Use for removing a pinion shaft.

A	106 mm (4.17 in.)
B	350 mm (13.78 in.)
C	6 mm (0.24 in.)
D	90 mm (3.54 in.)
E	10 mm (0.39 in.)
F	40 mm (1.57 in.)
G	10 mm (0.39 in.)
H	35.6 mm (1.40 in.)
I	36 mm (1.42 in.)
J	41.6 mm (1.64 in.)
K	Part code No. 3A201-4130 nut
L	M27 × 1.5
M	M10 × 1.25

W10315930

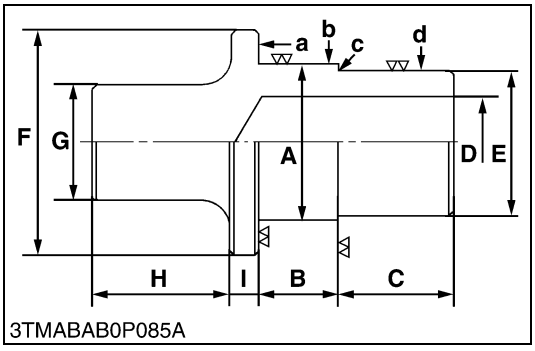

3TMABAB0P085A

Hydraulic Arm Shaft Bushing Press-Fitting Tool

Application : Use for replacing the hydraulic arm shaft bushings in the hydraulic cylinder body.

	Right	Left
A	54.7 to 54.9 mm (2.1535 to 5.1614 in.)	49.7 to 49.9 mm (1.9567 to 1.9646 in.)
B	24.5 to 25.5 mm (0.9646 to 1.0039 in.)	21.5 to 22.5 mm (0.8465 to 0.8858 in.)
C	40 mm (1.57 in.)	40 mm (1.57 in.)
D	32 mm (1.26 in.)	30 mm (1.18 in.)
E	49.7 to 49.9 mm (1.9567 to 1.9646 in.)	44.7 to 44.9mm (1.7598 to 1.7677 in.)
F	70 mm dia. (2.76 in. dia.)	
G	40 mm dia. (1.57 in. dia.)	
H	50 mm (1.97 in.)	
I	10 mm (0.39 in.)	
a	6.3 µm (250 µin.)	
b	6.3 µm (250 µin.)	
c	6.3 µm (250 µin.)	
d	6.3 µm (250 µin.)	

W10316550

https://truckmanualshub.com/

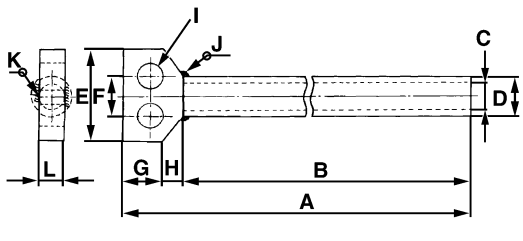

3TMABAB0P086A

Draft Control Test Bar

Application : Use for checking the lift range and floating range of hydraulic draft control.

A	1045 mm (41.14 in.)
B	1000 mm (29.37 in.)
C	20 mm dia. (0.79 in. dia.)
D	30 mm dia. (1.18 in. dia.)
E	90 mm (3.54 in.)
F	30 mm (1.18 in.)
G	30 mm (1.18 in.)
H	15 mm (0.59 in.)
I	20 mm dia. (0.79 in.dia.)
J	Weld all around
K	Weld all around
L	20 mm (0.79 in.)

W10715440

https://truckmanualshub.com/

9. TIRES

[1] TIRE PRESSURE

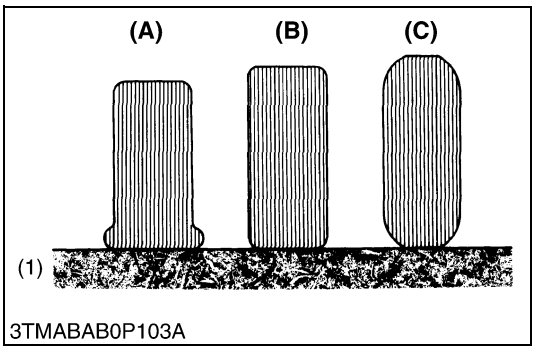

Though the tire pressure is factory-set to the prescribed level, it naturally drops slowly in the course of time. Thus, check it everyday and inflate as necessary. To inflate the wheel tires, use an air compressor or hand pump.

- **Recommended inflation pressure**
  Maintain the pressure shown below.

	Tire sizes	Inflation Pressure
Front	11.2 - 24, 4PR	120 kPa (1.2 kgf/cm^2)
	355/80 - D20, 4PR	100 kPa (1.0 kgf/cm^2)
	360/70R20	160 kPa (1.6 kgf/cm^2)
	320/70R24	160 kPa (1.6 kgf/cm^2)
Rear	7 - 16, 4PR	180 kPa (1.8 kgf/cm^2)
	212/80 - D15, 4PR	160 kPa (1.6 kgf/cm^2)
	7 - 12, 6PR	200 kPa (2.0 kgf/cm^2)
	7.5L - 15, 8PR	200 kPa (2.0 kgf/cm^2)

CAUTION

- **Do not attempt to mount a tire. This should be done by a qualified person with the proper equipment.**
  Qualified person with the proper tire mounting equipment should recognize the following warning.

WARNING

- **Never exceed 241 kPa (2.5 kgf/cm^2, 35 psi) when attempting to seat a bead. If beads have not been seated by the time the pressure has reached 241 kPa (2.5 kgf/cm^2, 35 psi), deflate the assembly, reposition the tire on the rim, relubricate and reinflate. After seating the bead, adjust inflation pressure as recommended in the inflation pressure chart.**

(1) Ground

(A) Insufficient
(B) Standard
(C) Excessive

W10440050

https://truckmanualshub.com/

[2] TREADS ADJUSTMENT

CAUTION

- **When working on slopes or working with trailer, set the wheel tread as wide as practice for the job for maximum stability.**
- **Support tractor securely on stands before removing a wheel.**
- **Do not work under any hydraulically supported devices. They can settle, suddenly leak down, or be accidentally lowered. If necessary to work under tractor or any machine elements for servicing or adjustment, securely support them with stands or suitable blocking beforehand.**
- **Never operate tractor with a loose rim, wheel, or axle.**

(1) Front Wheels

Front Wheels

Front tread can not be adjusted.

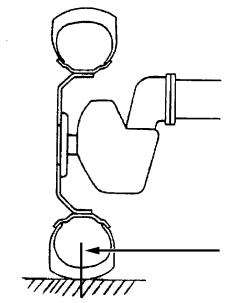

3TMABAB0P095A

Tire	7-16 Farm	7.00 -12 Farm	212/80 - D15 Turf	7.5L - 15 IND
Tread	1085 mm (42.7 in.)	1150 mm (45.3 in.)	1115 mm (43.9 in.)	1075 mm (42.3 in.)

IND : for industrial

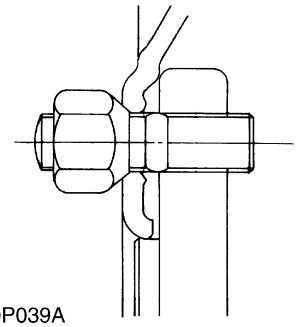

3TLAAAB0P039A

(2) Rear Wheels

Rear tread can be adjusted in 6 steps depending on the model.

To change the tread

1. Lift the rear tires off the ground.
2. Follow the illustrations below to get the desired tread width.

■ **IMPORTANT**

- **If not attached as illustrated, transmission parts may be damaged.**
- **When re-fitting or adjusting a wheel, tighten the bolts to the following torques then recheck after driving the tractor 200 m (200 yards) and thereafter according to service interval.**

Rear	Tire	11.2 - 24 Farm	
	Tread	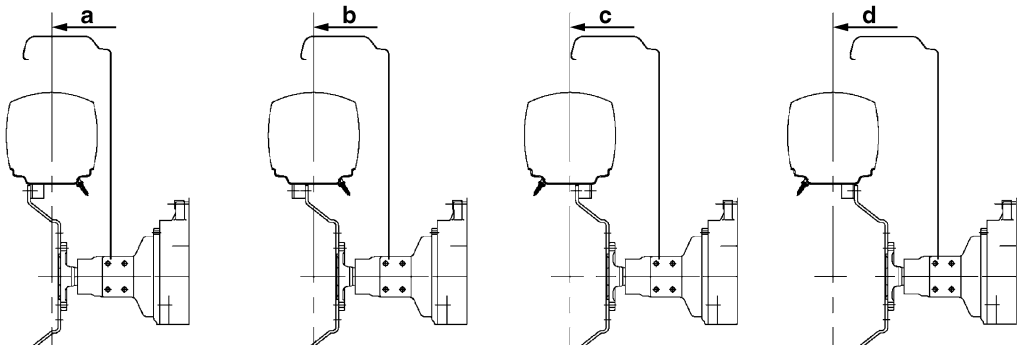 3TLAAAE1P020A	
	Tires	355 / 80 - D20 Turf	360 / 70R20 Farm
	Tread	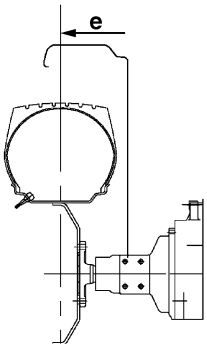 3TLAAAE1P021A	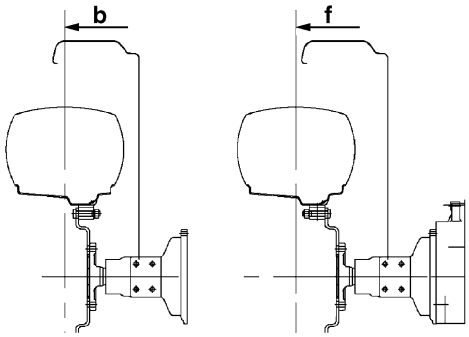 3TLAAAE1P022A
	Tire	320 / 70R24 Farm	
	Tread	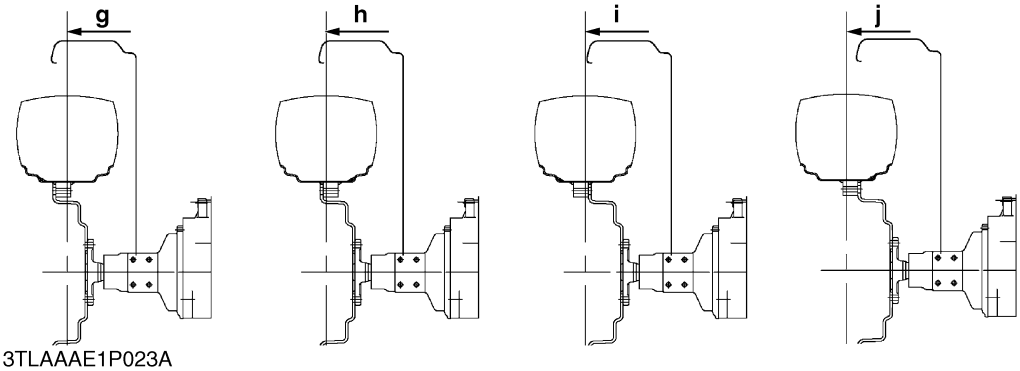 3TLAAAE1P023A	

a : 1015 mm (40.0 in.) d : 1295 mm (51.0 in.) f : 1225 mm (48.2 in.) h : 1145 mm (45.1 in.) j : 1250 mm (49.2 in.)
b : 1115 mm (43.9 in.) e : 1085 mm (42.7 in.) g : 1090 mm (42.9 in.) i : 1200 mm (47.2 in.)
c : 1195 mm (47.0 in.)

W1083322

[3] TIRE LIQUID INJECTION

Auxiliary weights can be used to increase traction force for plowing in fields or clay ground.

Another way is to inject water or another liquid, such as a calcium chloride solution in the tires. Water must not be used in winter since it freezes at 0 °C (32 °F). The calcium chloride solution will not freeze and moreover, affords higher effect than water since its specific gravity is higher than that of water by about 20 %. Below is an explanation of calcium chloride solution injection.

■ **IMPORTANT**

- **Do not fill the front tires with liquid.**

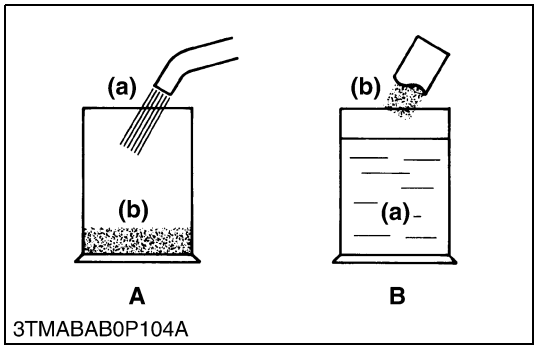

3TMABAB0P104A

Preparation of Calcium Chloride Solution

CAUTION

- **When making a calcium chloride solution, do not pour water over calcium chloride since this results in chemical reaction which will cause high temperature. Instead add a small amount of calcium chloride to the water at a time until the desired solution is achieved.**

Freezing temp.	Weight of $CaCl_2$ to be dissolved in 100 L (26.5 U.S.gals., 22.0 Imp.gals.) of water
–5 °C (23 °F)	12 kg (26.4 lbs)
–10 °C (14 °F)	21 kg (46.3 lbs)
–15 °C (5 °F)	28 kg (61.7 lbs)
–20 °C (–4 °F)	34 kg (75.0 lbs)
–25 °C (–13 °F)	40 kg (88.2 lbs)
–30 °C (–22 °F)	44 kg (97.0 lbs)
–35 °C (–31 °F)	49 kg (108 lbs)
–40 °C (–40 °F)	52 kg (114.6 lbs)
–45 °C (–49 °F)	56 kg (123.5 lbs)
–50 °C (–58 °F)	61 kg (134.5 lbs)

(a) Water **A : Bad**
(b) $CaCl_2$ (Calcium Chloride) **B : Good**

W10330830

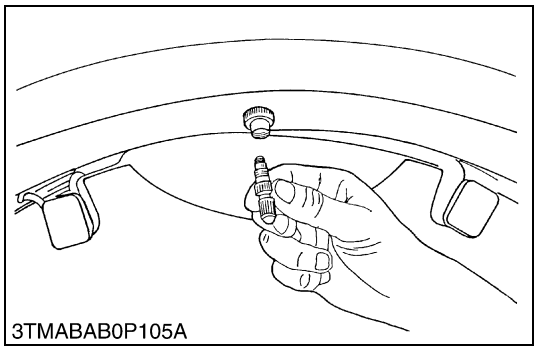
3TMABAB0P105A

Attaching Injector

1. Lift the rear tires off the ground.
2. Turn the tire so that the air valve is at the top.
3. Remove the air valve, and attach the injector. (Code No. 07916-52501)

(1) Injector (2) Hose

W10333310

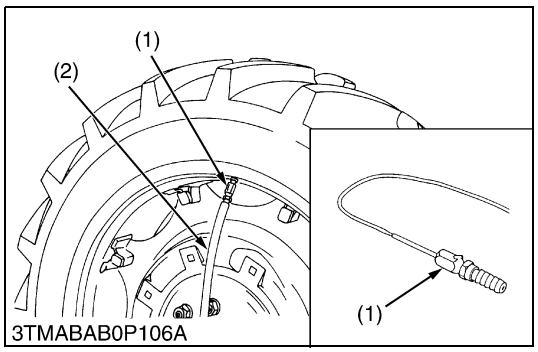

3TMABAB0P106A

Fig. 1

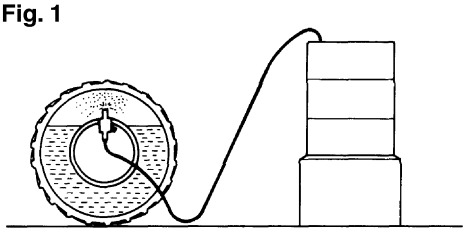

Fig. 2

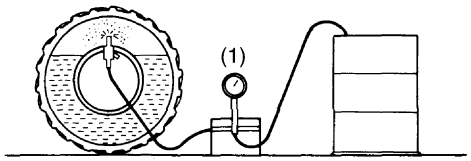

Fig. 3

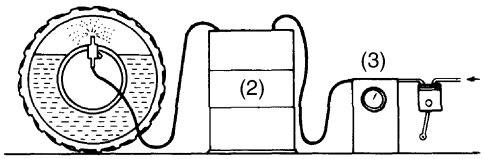

3TMABAB0P111A

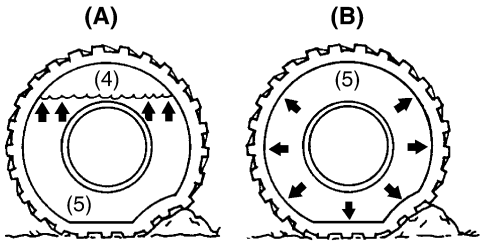

3TMABAB0P107A

Injection

CAUTION

- **When a calcium chloride solution is used, cool it before pouring it into the tire.**
- **Do not fill tires with water or solution more than 75 % of full capacity (to the valve stem level).**

The following four ways can be used to inject water or a calcium chloride solution into tires.

1. Gravity injection (Fig. 1)
2. Pump injection (Fig. 2)
3. Pressure tank injection (Fig. 3)
4. Injection directly from top (only when water is being used).

■ **NOTE**

- **Once injection is completed, reset the air valve, and pump air into the tire to the specified pressure.**

Weight of Calcium Chloride Solution Filling 75 % of Full Capacity of a Tire.

Tire sizes	11.2-24
Slush free at –10 °C (14 °F) Solid at –30 °C (–22 °F) [Approx. 1 kg (2 lbs.) $CaCl_2$ per 4 L (1 gal.) of water]	105 kg (231 lbs)
Slush free at –24 °C (–11 °F) Solid at –47 °C (–53 °F) [Approx. 1.5 kg (3.5 lbs.) $CaCl_2$ per 4 L (1 gal.) of water]	110 kg (242 lbs)
Slush free at –47 °C (–53 °F) Solid at –52 °C (–62 °F) [Approx. 2.25 kg (5 lbs.) $CaCl_2$ per 4 L (1 gal.) of water]	115 kg (253 lbs)

(1) Pump
(2) Pressure Tank
(3) Compressor
(4) Air
(5) Water

(A) Correct : 75 %
Air Compresses Like A Cushion
(B) Incorrect : 100 % Full
Water Can Not Be Compressed

W10334350

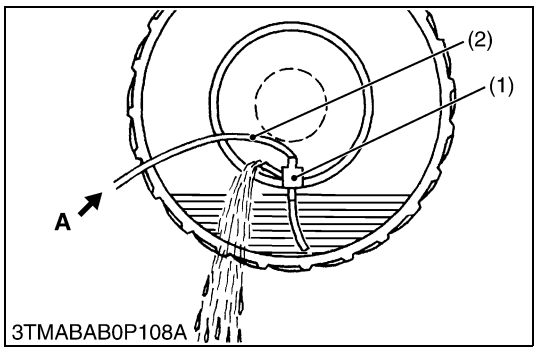

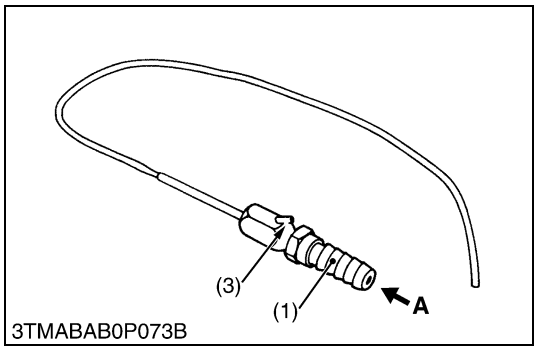

Draining Water or Solution

1. Lift the rear tires off the ground.
2. Turn the tire so that the air valve is at the bottom.
3. Remove the air valve, and drain liquid (liquid can only be drained to the level of the valve and liquid under that level remains inside).
4. To drain liquid completely, use the injector, and direct compressed air into the tire to force out the liquid through the injector's vent.

(1) Injector
(2) Hose
(3) Vent

A: Compressed Air

W10451670

https://truckmanualshub.com/

1 ENGINE

https://truckmanualshub.com/

MECHANISM

CONTENTS

1. FEATURES 1-M1
2. FUEL SYSTEM 1-M2
   [1] GENERAL 1-M2
   [2] GOVERNOR 1-M3
3. LUBRICATING SYSTEM 1-M4
4. COOLING SYSTEM 1-M5

https://truckmanualshub.com/

1. FEATURES

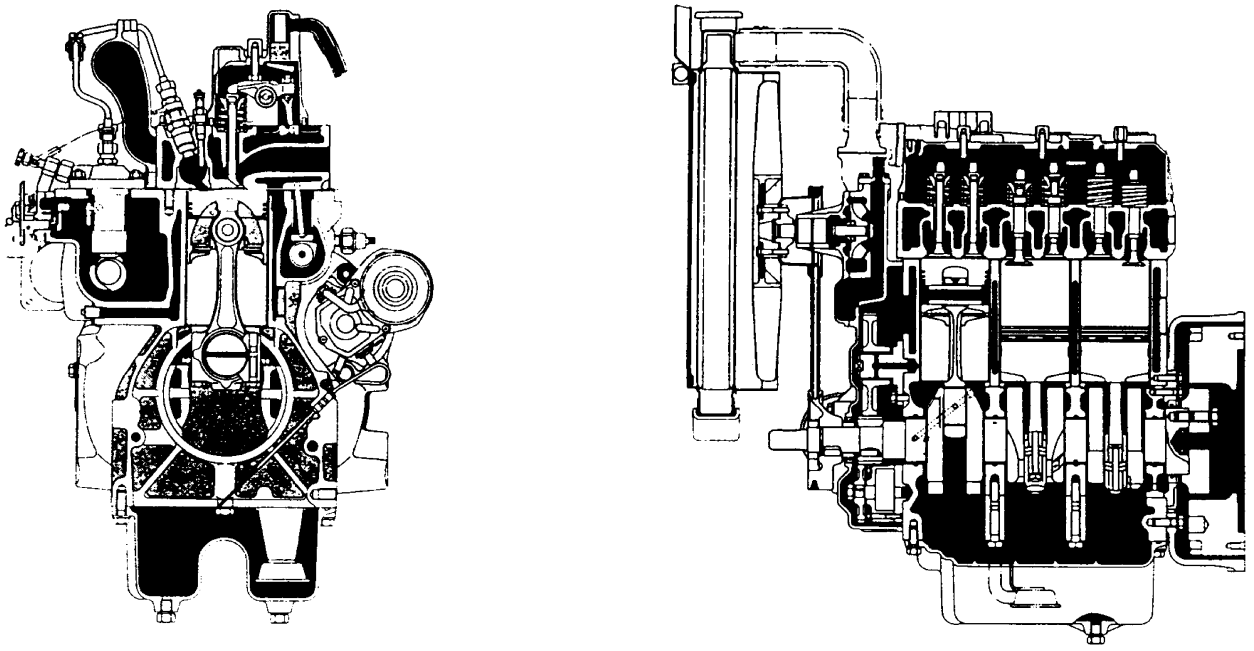

3TLAAAB1P001A

The D1703-MA-E is vertical, water-cooled, 4 cycle diesel engine. This is incorporated KUBOTA's foremost technologies. With KUBOTA's E-TVCS (Three Vortex Combustion System), well-known Bosch type injection pump and the well-balanced designs, they give greater power, low fuel consumption, little vibration and quiet operation.

2. FUEL SYSTEM

[1] GENERAL

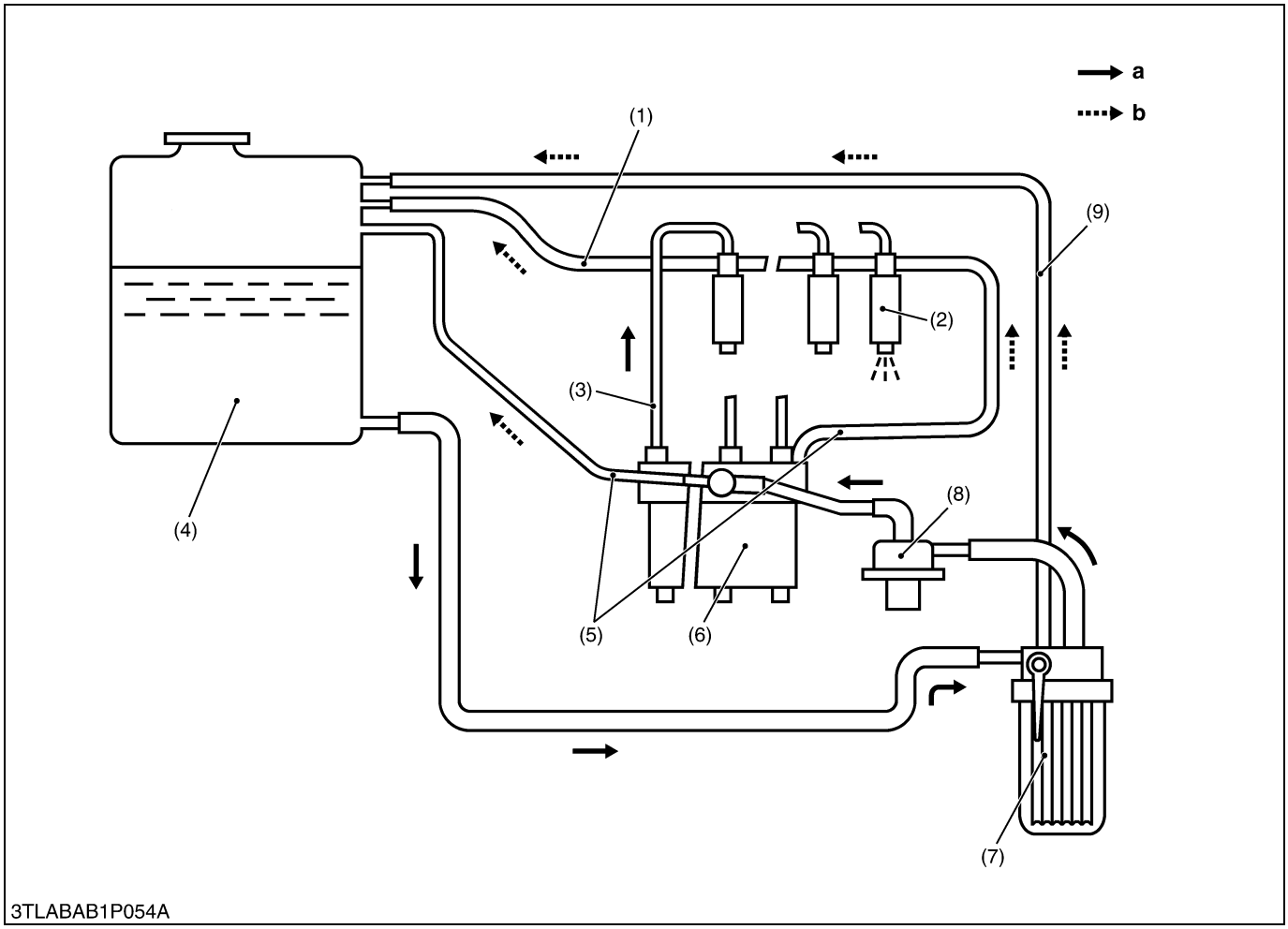

(1) Fuel Overflow Pipe
(2) Injection Nozzle
(3) Injection Pipe
(4) Fuel Tank
(5) Injection Pump Air Vent Pipe
(6) Injection Pump
(7) Fuel Filter
(8) Fuel Feed Pump
(9) Fuel Filter Air Vent Pipe

a : Injected Fuel Flow
b : Returned Fuel Flow

The fuel system of this tractor is shown in the diagram above.

Fuel from the tank flows in the passage as shown by the arrows, and is injected from the nozzle via the fuel injection pump. Overflow fuel returns to the tank.

The system includes filters and other concerns to protect it from entrance of air, water and dust.

While the engine is running, fuel is fed into the injection pump (6) by the fuel feed pump (8) after passing through the fuel filter (7). The fuel camshaft actuates the injection pump and force-feeds fuel to the injection nozzle (2) through the injection pipe (3). Fuel is then sprayed through the nozzle into the combustion chamber. The fuel discharged after lubricating and cooling the injection nozzle is returned to the fuel tank (4) automatically through the overflow pipe (1).

[2] GOVERNOR

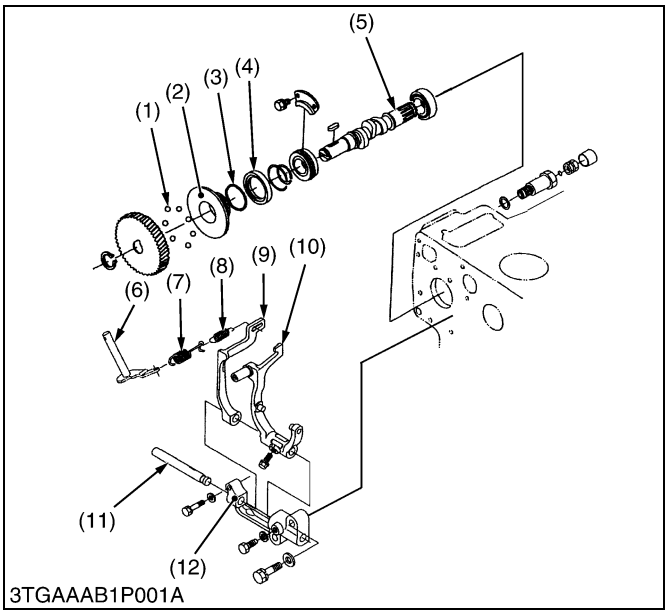

The governor serves to keep engine speed constant by automatically adjusting the amount of fuel supplied to the engine according to changes in the load. This engine employs an all-speed governor which controls the centrifugal force of the steel ball (1) weight, produced by rotation of the fuel camshaft (5), and the tension of the governor spring 1 (7) and 2 (8) are balanced.

(1) Steel Ball
(2) Governor Sleeve
(3) Steel Ball
(4) Governor Ball Case
(5) Fuel Camshaft
(6) Governor Lever
(7) Governor Spring 1
(8) Governor Spring 2
(9) Fork Lever 2
(10) Fork Lever 1
(11) Fork Lever Shaft
(12) Fork Lever Holder

W1017186

3. LUBRICATING SYSTEM

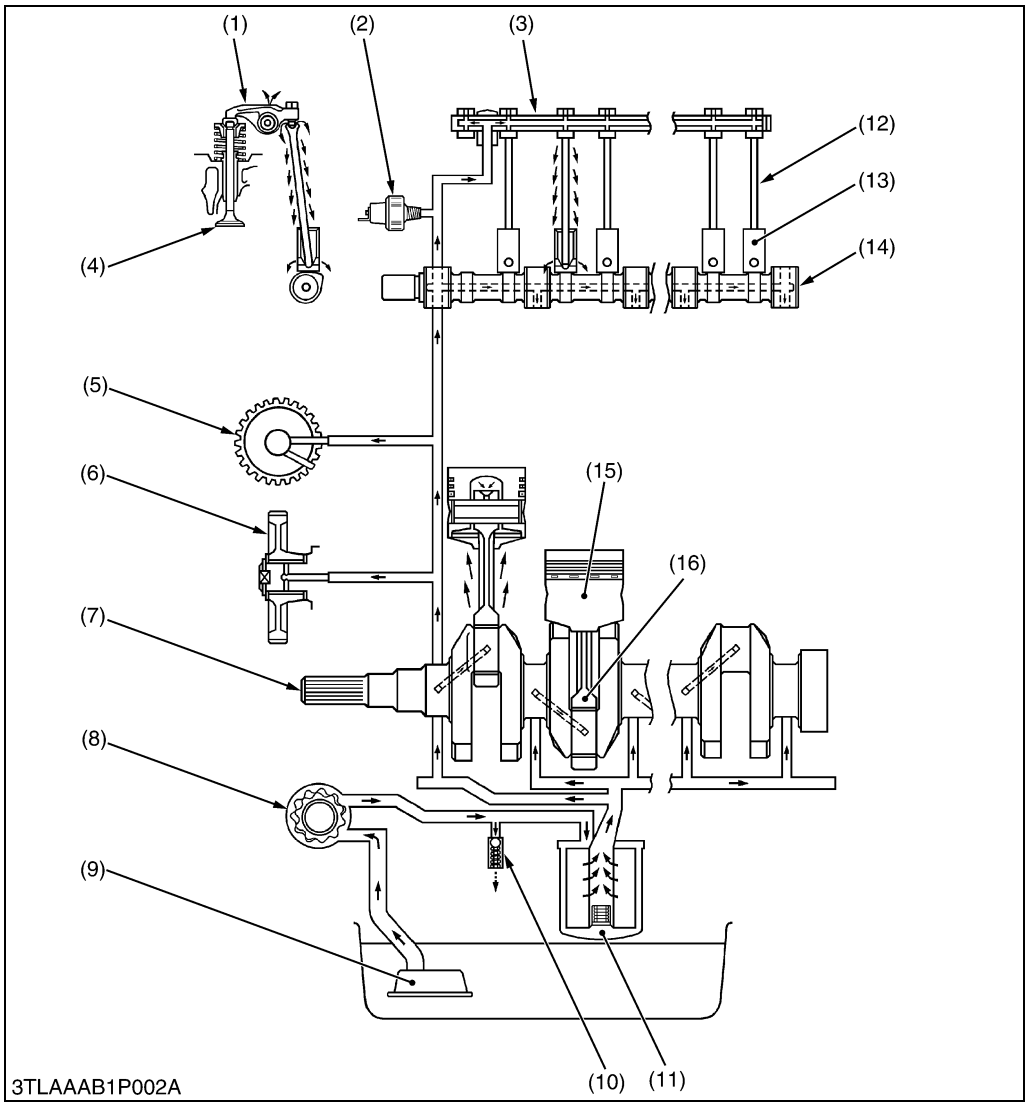

(1) Rocker Arm
(2) Oil Pressure Switch
(3) Rocker Arm Shaft
(4) Valve
(5) Governor Shaft
(6) Idle Gear
(7) Crankshaft
(8) Oil Pump
(9) Oil Strainer
(10) Relief Valve
(11) Oil Filter Cartridge
(12) Push Rod
(13) Tappet
(14) Camshaft
(15) Piston
(16) Connecting Rod

W1012968

A lubricating system consists of an oil strainer (9), oil pump (8), relief valve (10), oil filter cartridge (11) and oil pressure switch (2).

The oil pump sucks lubricating oil from the oil pan through the oil strainer and the oil flows down to the oil filter cartridge where it is further filtered. Then the oil is forced to crankshaft (7), connecting rods (16), idle gear (6), governor shaft (5), camshaft (14) and rocker arm shaft (3) to lubricate each part through the oil gallery.

https://truckmanualshub.com/

4. COOLING SYSTEM

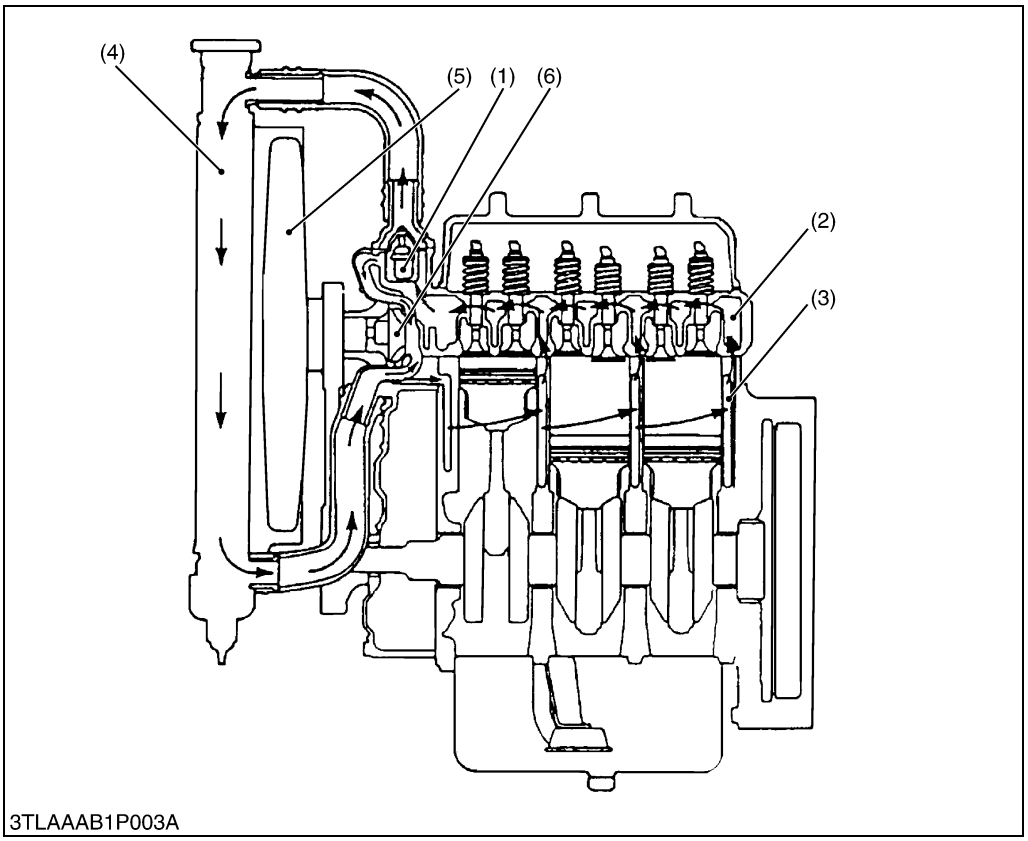

(1) Thermostat
(2) Cylinder Head Water Jacket
(3) Cylinder Block Water Jacket
(4) Radiator
(5) Cooling Fan
(6) Water Pump

The cooling system consists of a radiator (4), a centrifugal water pump (6), a cooling fan (5) and a thermostat (1).

The water is cooled as it flows through the radiator core, and the cooling air through the radiator core by cooling fan.

The water pump receives water from the radiator or from the cylinder head and force it into the cylinder block.

The thermostat opens or closes according to the water temperature. When the water temperature is high, the thermostat opens to allow the water to flow from the cylinder head to the radiator. When the water temperature is low, the thermostat close to flow the water only to the water pump.

The opening temperature of the thermostat is approx. 71 °C (159.8 °F).

https://truckmanualshub.com/

SERVICING

CONTENTS

1. TROUBLESHOOTING 1-S1
2. SERVICING SPECIFICATIONS 1-S4
3. TIGHTENING TORQUES 1-S9
4. CHECKING, DISASSEMBLING AND SERVICING 1-S10
   [1] CHECKING AND ADJUSTING 1-S10
      (1) Compression Pressure 1-S10
      (2) Valve Clearance 1-S11
      (3) Top Clearance 1-S12
      (4) Engine Oil Pressure 1-S13
      (5) Fan Belt 1-S13
      (6) Radiator 1-S14
      (7) Injection Pump 1-S16
      (8) Injection Nozzle 1-S17
   [2] PREPARATION 1-S18
      (1) Separating Engine and Clutch Housing 1-S18
      (2) Separating Engine from Front Axle Frame 1-S24
   [3] DISASSEMBLING AND ASSEMBLING 1-S26
      (1) Cylinder Head and Valves 1-S26
      (2) Timing Gears, Camshaft and Fuel Camshaft 1-S29
      (3) Connecting Rod and Piston 1-S35
      (4) Crankshaft 1-S38
      (5) Thermostat 1-S41
      (6) Injection Nozzle 1-S41
   [4] SERVICING 1-S42
      (1) Cylinder Head and Valves 1-S42
      (2) Timing Gears, Camshaft and Fuel Camshaft 1-S48
      (3) Piston and Connecting Rod 1-S50
      (4) Crankshaft 1-S53
      (5) Cylinder 1-S58
      (6) Oil Pump 1-S59

https://truckmanualshub.com/

1. TROUBLESHOOTING

Symptom	Probable Cause	Solution	Reference Page
Engine Does Not Start	No fuel	Replenish fuel	–
	Air in the fuel system	Bleed	G-29
	Water in the fuel system	Change fuel and repair or replace fuel system	–
	Fuel pipe clogged	Clean	–
	Fuel filter clogged	Change	G-19
	Excessively high viscosity of fuel or engine oil at low temperature	Use specified fuel or engine oil	G-6, 11
	Fuel with low cetane number	Use specified fuel	G-6
	Fuel leak due to loose injection pipe retaining nut	Tighten retaining nut	1-S26
	Incorrect injection timing	Adjust	1-S16
	Fuel camshaft worn	Replace	1-S34
	Injection nozzle clogged	Clean	1-S41
	Injection pump malfunctioning	Replace	1-S30
	Seizure of crankshaft, camshaft, piston, cylinder or bearing	Repair or replace	–
	Compression leak from cylinder	Replace head gasket, tighten cylinder head screw, glow plug and nozzle holder	1-S10
	Improper valve timing	Correct or replace timing gear	1-S33
	Piston ring and cylinder worn	Replace	1-S36, S37
	Excessive valve clearance	Adjust	1-S11
Starter Does Not Run	Battery discharged	Charge	G-23
	Starter malfunctioning	Repair or replace	G-17, 9-S23
	Main switch malfunctioning	Repair or replace	9-S8, S9
	Safety switch improperly adjusted or defective	Repair or replace	9-S10
	Wiring disconnected	Connect	–
Engine Revolution Is Not Smooth	Fuel filter clogged or dirty	Change	G-19
	Air cleaner clogged	Clean or replace	G-18
	Fuel leak due to loose injection pipe retaining nut	Tighten retaining nut	1-S26
	Injection pump malfunctioning	Repair or replace	1-S30
	Incorrect nozzle injection pressure	Adjust	1-S17, S41
	Injection nozzle stuck or clogged	Repair or replace	1-S17, S41
	Governor malfunctioning	Repair	1-S34

W1014322

Symptom	Probable Cause	Solution	Reference Page
Either White or Blue Exhaust Gas Is Observed	Excessive engine oil	Reduce to specified level	G-11
	Piston ring and cylinder worn or stuck	Repair or replace	1-S36, S37, S51, S52
	Incorrect injection timing	Adjust	1-S16
	Deficient compression	Adjust top clearance	1-S12
Either Black or Dark Gray Exhaust Gas Is Observed	Overload	Loosen load	–
	Low grade fuel used	Use specified fuel	G-6
	Fuel filter clogged	Replace	G-19
	Air cleaner clogged	Clean or replace	G-18
	Deficient nozzle injection	Repair or replace nozzle	1-S17, S41
Deficient Output	Incorrect injection timing	Adjust	1-S16
	Engine's moving parts seem to be seizing	Repair or replace	–
	Injection pump malfunctioning	Replace injection pump	1-S30
	Deficient nozzle injection	Repair or replace nozzle	1-S17, S41
	Compression leak	Replace head gasket, tighten cylinder head screws, glow plug and nozzle holder	1-S10
Excessive Lubricant Oil Consumption	Piston ring's gap facing the same direction	Shift ring gap direction	1-S36
	Oil ring worn or stuck	Replace	1-S36, S37, S51, S52
	Piston ring groove worn	Replace piston	1-S36, S37, S51, S52
	Valve stem and valve guide worn	Replace	1-S44
	Oil leaking due to defective seals or packing	Replace	–
Fuel Mixed into Lubricant Oil	Injection pump's plunger worn	Repair pump	1-S30
	Deficient nozzle injection	Repair or replace nozzle	1-S17, S41
	Injection pump broken	Replace	1-S30
Water Mixed into Lubricant Oil	Head gasket defective	Replace	–
	Cylinder block or cylinder head flawed	Replace	–

W1014322

https://truckmanualshub.com/

Symptom	Probable Cause	Solution	Reference Page
Low Oil Pressure	Engine oil insufficient	Replenish	G-11
	Oil filter clogged	Clean	G-11
	Relief valve stuck with dirt	Clean	–
	Relief valve spring weaken or broken	Replace	–
	Excessive oil clearance of crankshaft bearing	Replace	1-S55
	Excessive oil clearance of crankpin bearing	Replace	1-S54
	Excessive oil clearance of rocker arm	Replace	1-S28
	Oil passage clogged	Clean	–
	Different type of oil	Use specified type of oil	G-6
	Oil pump defective	Repair or replace	1-S34, S59
High Oil Pressure	Different type of oil	Use specified type of oil	G-6
	Relief valve defective	Replace	1-S13
Engine Overheated	Engine oil insufficient	Replenish	G-11
	Fan belt broken or elongated	Replace or adjust	G-19, 1-S13
	Coolant insufficient	Replenish	G-6
	Radiator net and radiator fin clogged with dust	Clean	–
	Inside of radiator corroded	Clean or replace	–
	Coolant flow route corroded	Clean or replace	–
	Radiator cap defective	Replace	1-S14
	Overload running	Loosen load	–
	Head gasket defective	Replace	–
	Incorrect injection timing	Adjust	1-S16
	Unsuitable fuel used	Use specified fuel	G-6

W1014322

2. SERVICING SPECIFICATIONS

ENGINE BODY

Item		Factory Specification	Allowable Limit
Cylinder Head Surface	Flatness	–	0.05 mm / 500 mm 0.0020 in./ 19.69 in.
Compression Pressure (When Cranking with Starting Motor)		3.53 to 4.02 MPa / 290 min^{-1} (rpm) 36 to 41 kgf/cm^2 / 290 min^{-1} (rpm) 512 to 583 psi / 290 min^{-1} (rpm)	2.55 MPa / 290 min^{-1} (rpm) 26 kgf/cm^2 / 290 min^{-1} (rpm) 370 psi / 290 min^{-1} (rpm)
Difference among Cylinders		–	10 % or less
Top Clearance		0.55 to 0.70 mm 0.0217 to 0.0276 in.	–
Valve Clearance (When Cold)		0.18 to 0.22 mm 0.0071 to 0.0087 in.	–
Valve Seat	Width (Intake)	2.12 mm 0.0835 in.	–
	Width (Exhaust)	2.12 mm 0.0835 in.	–
Valve Seat	Angle (Intake)	1.047 rad 60 °	–
	Angle (Exhaust)	0.785 rad 45 °	–
Valve Face	Angle (Intake)	1.047 rad 60 °	–
	Angle (Exhaust)	0.785 rad 45 °	–
Valve Stem to Valve Guide	Clearance	0.040 to 0.070 mm 0.00157 to 0.00276 in.	0.1 mm 0.0039 in.
Valve Stem	O.D.	7.960 to 7.975 mm 0.31339 to 0.31398 in.	–
Valve Guide	I.D.	8.015 to 8.030 mm 0.31555 to 0.31614 in.	–
Valve Recessing	Protrusion	0.05 mm 0.0020 in.	–
	Recessing	0.15 mm 0.0059 in.	0.4 mm 0.0157 in.
Valve Timing (Intake Valve)	Open	0.21 rad (12 °) before T.D.C.	–
	Close	0.63 rad (36 °) after B.D.C.	–
Valve Timing (Exhaust Valve)	Open	1.05 rad (60 °) before B.D.C.	–
	Close	0.21 rad (12 °) after T.D.C.	–

W10138740

ENGINE BODY (Continued)

Item		Factory Specification	Allowable Limit
Valve Spring	Free Length	41.7 to 42.2 mm 1.6417 to 1.6614 in.	41.2 mm 1.6220 in.
	Setting Load / Setting Length	117.6 N / 35.0 mm 12.0 kgf / 35.0 mm 26.4 lbs / 1.3780 in.	100.0 N / 35.0 mm 10.2 kgf / 35.0 mm 22.5 lbs / 1.3780 in.
	Tilt	–	1.0 mm 0.039 in.
Rocker Arm Shaft to Rocker Arm	Clearance	0.016 to 0.045 mm 0.00063 to 0.00177 in.	0.1 mm 0.0039 in.
Rocker Arm Shaft	O.D.	13.973 to 13.984 mm 0.55012 to 0.55055 in.	–
Rocker Arm	I.D.	14.000 to 14.018 mm 0.55118 to 0.55189 in.	–
Push Rod	Alignment	–	0.25 mm 0.0098 in.
Tappet to Tappet Guide	Clearance	0.020 to 0.062 mm 0.00079 to 0.00244 in.	0.07 mm 0.0028 in.
Tappet	O.D.	23.959 to 23.980 mm 0.94327 to 0.94410 in.	–
Tappet Guide	I.D.	24.000 to 24.021 mm 0.94488 to 0.94571 in.	–
Timing Gear			
Crank Gear to Idle Gear	Backlash	0.0415 to 0.1122 mm 0.00163 to 0.00442 in.	0.15 mm 0.0059 in.
Idle Gear to Cam Gear	Backlash	0.0415 to 0.1154 mm 0.00163 to 0.00454 in.	0.15 mm 0.0059 in.
Idle Gear to Injection Pump Gear	Backlash	0.0415 to 0.1154 mm 0.00163 to 0.00454 in.	0.15 mm 0.0059 in.
Crank Gear to Oil Pump Gear	Backlash	0.0415 to 0.1090 mm 0.00163 to 0.00429 in.	0.15 mm 0.0059 in.
Idle Gear	Side Clearance	0.12 to 0.48 mm 0.0047 to 0.0189 in.	0.9 mm 0.0354 in.
Idle Gear Shaft to Idle Gear Bushing	Clearance	0.025 to 0.066 mm 0.00098 to 0.00260 in.	0.1 mm 0.0039 in.
Idle Gear Shaft	O.D.	37.959 to 37.975 mm 1.49445 to 1.49508 in.	–
Idle Gear Bushing	I.D.	38.000 to 38.025 mm 1.49606 to 1.49704 in.	–

W11145540

ENGINE BODY (Continued)

Item		Factory Specification	Allowable Limit
Camshaft	Side Clearance	0.07 to 0.22 mm 0.0028 to 0.0087 in.	0.3 mm 0.0118 in.
Camshaft	Alignment	–	0.01 mm 0.0004 in.
Cam	Height (Intake / Exhaust)	33.90 mm 1.3346 in.	33.85 mm 1.3327 in.
Camshaft Journal to Cylinder Block Bore	Clearance	0.50 to 0.91 mm 0.00197 to 0.00358 in.	0.15 mm 0.0059 in.
Camshaft Journal	O.D.	39.934 to 39.950 mm 1.57221 to 1.57284 in.	–
Cylinder Block Bore	I.D.	40.000 to 40.025 mm 1.57480 to 1.57579 in.	–
Piston Pin Bore	I.D.	25.000 to 25.013 mm 0.98425 to 0.98476 in.	25.05 mm 0.9862 in.
Second RIng to Ring Groove	Clearance	0.093 to 0.128 mm 0.0037 to 0.0050 in.	0.2 mm 0.0079 in.
Oil Ring to Ring Groove	Clearance	0.020 to 0.060 mm 0.0008 to 0.0021 in.	0.15 mm 0.0059 in.
Top Ring	Ring Gap	0.25 to 0.40 mm 0.0098 to 0.0157 in.	1.25 mm 0.0492 in.
Second Ring	Ring Gap	0.30 to 0.45 mm 0.0118 to 0.0177 in.	1.25 mm 0.0492 in.
Oil Ring	Ring Gap	0.25 to 0.45 mm 0.0098 to 0.0177 in.	1.25 mm 0.0492 in.
Connecting Rod	Alignment	–	0.05 mm 0.0020 in.
Piston Pin to Small End Bushing	Clearance	0.014 to 0.038 mm 0.00055 to 0.00150 in.	0.15 mm 0.0059 in.
Piston Pin	O.D.	25.002 to 25.011 mm 0.98433 to 0.98468 in.	–
Small End Bushing	I.D.	25.025 to 25.040 mm 0.98523 to 0.98582 in.	–
Crankshaft	Alignment	–	0.02 mm 0.00079 in.

W11174020

ENGINE BODY (Continued)

Item		Factory Specification	Allowable Limit
Crankshaft Journal to Crankshaft Bearing 1	Oil Clearance	0.040 to 0.118 mm 0.00157 to 0.00465 in.	0.20 mm 0.0079 in.
Crankshaft Journal	O.D.	59.921 to 59.940 mm 2.35910 to 2.35984 in.	–
Crankshaft Bearing 1	I.D.	59.980 to 60.039 mm 2.36142 to 2.36374 in.	–
Crankshaft Journal to Crankshaft Bearing 2	Oil Clearance	0.040 to 0.104 mm 0.00157 to 0.00409 in.	0.20 mm 0.0079 in.
Crankshaft Journal	O.D.	59.921 to 59.940 mm 2.35910 to 2.35984 in.	–
Crankshaft Bearing 2	I.D.	59.980 to 60.025 mm 2.36142 to 2.36319 in.	–
Crankpin to Crankpin Bearing	Oil Clearance	0.025 to 0.087 mm 0.00098 to 0.00343 in.	0.20 mm 0.0079 in.
Crankpin	O.D.	46.959 to 46.975 mm 1.84878 to 1.84941 in.	–
Crankpin Bearing	I.D.	47.000 to 47.046 mm 1.85039 to 1.85220 in.	–
Crankshaft	Side Clearance	0.15 to 0.31 mm 0.0059 to 0.0122 in.	0.5 mm 0.0197 in.
Crankshaft Sleeve	Wear	–	0.1 mm 0.0039 in.
Cylinder Bore [Standard]	I.D.	87.000 to 87.022 mm 3.42519 to 3.42606 in.	+ 0.15 mm + 0.0059 in.
[Oversize]	I.D.	87.250 to 87.272 mm 3.43503 to 3.43590 in.	+ 0.15 mm + 0.0059 in.

W11210120

LUBRICATING SYSTEM

Engine Oil Pressure	At Idle Speed	More than 98 kPa 1.0 kgf/cm^2 14 psi	49 kPa 0.5 kgf/cm^2 7 psi
	At Rated Speed	294 to 441 kPa 3.0 to 4.5 kgf/cm^2 42.7 to 64.0 psi	245 kPa 2.5 kgf/cm^2 35.6 psi
Engine Oil Pressure Switch	Working Pressure	49 kPa 0.5 kgf/cm^2 7 psi	–
Inner Rotor to Outer Rotor	Clearance	0.03 to 0.14 mm 0.0012 to 0.0055 in.	0.2 mm 0.0079 in.
Outer Rotor to Pump Body	Clearance	0.11 to 0.19 mm 0.0043 to 0.0075 in.	0.25 mm 0.098 in.
Inner Rotor to Cover	Clearance	0.105 to 0.150 mm 0.00413 to 0.00591 in.	0.2 mm 0.0079 in.

W10139730

COOLING SYSTEM

Item		Factory Specification	Allowable Limit
Fan Belt	Tension	7.0 to 9.0 mm / (0.28 to 0.35 in.) deflection at 98 N (10 kgf, 22 lbs) of force	–
Thermostat Valve Opening Temperature	At Beginning	69.5 to 72.5 °C 157.1 to 162.5 °F	–
Valve Opening Temperature	Opened Completely	85 °C 185 °F	–
Radiator	Water Tightness	No leak at 137 kPa 1.4 kgf/cm^2 20 psi	–
Radiator Cap	Pressure Falling Time	more than 10 seconds for pressure fall from 88 to 59 kPa (from 0.9 to 0.6 kgf/cm^2, from 13 to 9 psi)	–

W10135990

FUEL SYSTEM

Item		Factory Specification	Allowable Limit
Injection Pump	Injection Timing	0.279 to 0.314 rad (16 to 18°) before T.D.C.	–
Injection Nozzle	Injection Pressure	13.73 to 14.71 MPa 140 to 150 kgf/cm^2 1991 to 2133 psi	–
Injection Nozzle Valve Seat	Valve Seat Tightness	When the pressure is 12.75 MPa (130 kgf/cm^2, 1849 psi), the valve seat must be fuel tightness.	–

W10139730

https://truckmanualshub.com/

3. TIGHTENING TORQUES

Tightening torques of screws, bolts and nuts on the table below are especially specified.
(For general use screws, bolts and nuts : See page G-7.)

Item	Size x Pitch	N·m	kgf·m	ft-lbs
Starter's **B** terminal mounting nut	M8	7.8 to 9.8	0.8 to 1.0	5.8 to 7.2
Steering wheel mounting nut	M12 x 1.25	29.4 to 49.0	3.0 to 5.0	21.7 to 36.2
3P delivery pipe joint bolt	–	49 to 69	5.0 to 7.0	36.1 to 50.6
Power steering delivery pipe joint bolt	–	34 to 39	3.5 to 4.0	25.3 to 28.9
Muffler mounting screw	–	31.4 to 37.2	3.2 to 3.8	23.1 to 27.5
Engine mounting screw	M10 x 1.25	48.1 to 55.8	4.9 to 5.7	35.4 to 41.2
Front axle frame mounting screw to engine	M12 x 1.25	102.9 to 117.6	10.5 to 12.5	76.0 to 86.8
Clutch mounting screw and reamer screw	M8 x 1.25	23.5 to 27.5	2.4 to 2.8	17.4 to 20.3
*Cylinder head bolt	M11 x 1.25	93.1 to 98.0	9.5 to 10.0	68.7 to 72.3
Cylinder head cover cap nut	M8 x 1.25	6.9 to 11.3	0.7 to 1.15	5.1 to 8.32
Injection pipe retaining nut	M12 x 1.5	24.5 to 34.3	2.5 to 3.5	18.1 to 25.3
Nozzle holder assembly	M20 x 1.5	49.0 to 68.6	5.0 to 7.0	36.2 to 50.6
Overflow pipe assembly retaining nut	–	19.6 to 24.5	2.0 to 2.5	14.5 to 18.1
Glow plug	M10 x 1.25	19.6 to 24.5	2.0 to 2.5	14.5 to 18.1
*Rocker arm bracket nut	M8 x 1.25	23.5 to 27.5	2.4 to 2.8	17.4 to 20.3
*Crankshaft nut	M30 x 1.5	137.3 to 156.9	14.0 to 16.0	101.3 to 115.7
*Idle gear shaft screw	M8 x 1.25	23.5 to 27.5	2.4 to 2.8	17.4 to 20.3
*Connecting rod screw	M8 x 1.0	44.1 to 49.0	4.5 to 5.0	32.5 to 36.2
*Flywheel screw	M12 x 1.25	98.0 to 107.8	10.0 to 11.0	72.3 to 79.5
*Main bearing case screw 2	M10 x 1.25	68.6 to 73.5	7.0 to 7.5	50.6 to 54.2
*Main bearing case screw 1	M9 x 1.25	46.1 to 50.9	4.7 to 5.2	34.0 to 37.6
Oil switch taper screw	PT 1/8	14.7 to 19.6	1.5 to 2.0	10.8 to 14.5
Nozzle holder	–	34.3 to 39.2	3.5 to 4.0	25.3 to 28.9

■ **NOTE**

- **For * marked screws, bolts and nuts on the table, apply engine oil to their threads and seats before tightening.**
- **The letter "M" in Size × Pitch means that the screw, bolt or nut dimension stands for metric. The size is the nominal outside diameter in mm of the threads. The pitch is the nominal distance in mm between two threads.**

W1013236

4. CHECKING, DISASSEMBLING AND SERVICING

[1] CHECKING AND ADJUSTING

(1) Compression Pressure

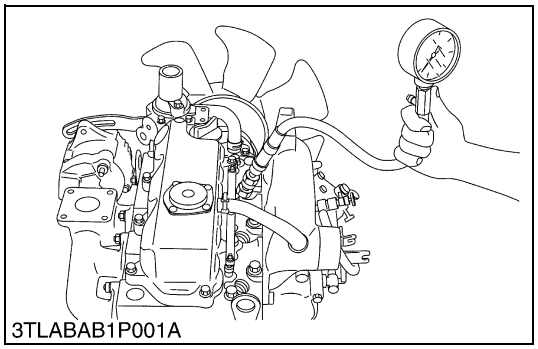
3TLABAB1P001A

Compression Pressure

1. Run the engine until it is warmed up.
2. Stop the engine and disconnect the **2P** connector from the stop solenoid in order to inject fuel.
3. Remove the air cleaner, the muffler and all injection nozzle.
4. Set a compression tester (Code No. 07909-30208) with the adaptor to the nozzle hole.
5. Keep the engine stop lever at **"Stop Position"**.
6. While cranking the engine with the starter, measure the compression pressure.
7. Repeat steps 4 through 6 for each cylinder.
8. If the measurement is below the allowable limit, apply a small amount of oil to the cylinder wall through the nozzle hole and measure the compression pressure again.
9. If the compression pressure is still less than the allowable limit, check the top clearance, valve cylinder head.
10. If the compression pressure increases after applying oil, check the cylinder wall and piston rings.

■ **NOTE**

- **Check the compression pressure with the specified valve clearance.**
- **Always use a fully charged battery for performing this test.**
- **Variances in cylinder compression values should be under 10 %.**

Compression pressure	Factory spec.	3.53 to 4.02 MPa 36 to 41 kgf/cm^2 512 to 583 psi
	Allowable limit	2.55 MPa 26 kgf/cm^2 370 psi

W10178940

https://truckmanualshub.com/

(2) Valve Clearance

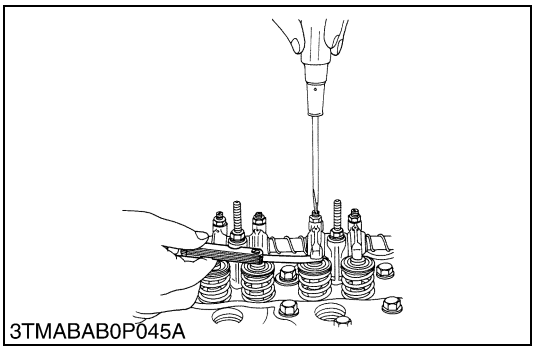
3TMABAB0P045A

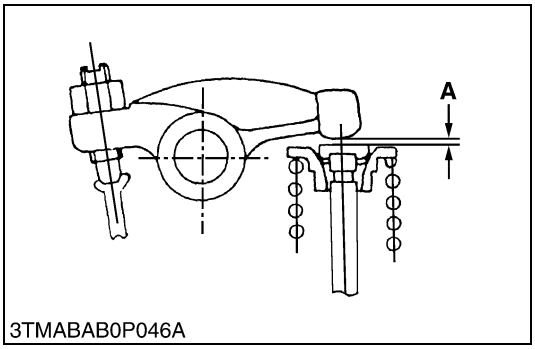

3TMABAB0P046A

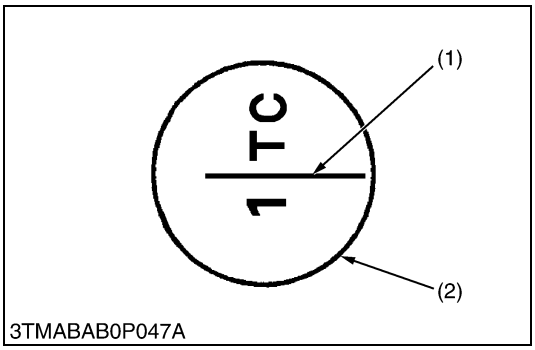

3TMABAB0P047A

Valve Clearance

■ **IMPORTANT**
- **Valve clearance must be checked and adjusted when engine is cold.**

1. Remove the head cover, the glow plugs and the timing window cover on the clutch housing.
2. Align the **"1TC"** mark line on the flywheel and center or timing window so that the No. 1 piston comes to the compression or overlap top dead center.
3. Check the following valve clearance marked with "☆" using a feeler gauge.
4. If the clearance is not within the factory specifications, adjust with the adjusting screw.

Valve clearance	Factory spec.	0.18 to 0.22 mm 0.0071 to 0.0087 in.

■ **NOTE**
- **The "TC" marking line on the flywheel is just for No. 1 cylinder. There is no "TC" marking for the other cylinders.**
- **No. 1 piston comes to the T.D.C. position when the "TC" marking is aligned with center of timing window on clutch-housing. Turn the flywheel 0.26 rad (15°) clockwise and counterclockwise to see if the piston is at the compression top dead center or the overlap position. Now referring to the table below, readjust the valve clearance. (The piston is at the compression top dead center when both the IN. and EX. valves do not move; it is at the overlap position when both the valves move.)**
- **Finally turn the flywheel 6.28 rad (360°) and align the "TC" marking line and the center of timing window. Adjust all the other valve clearance as required.**
- **After turning the flywheel counterclockwise twice or three times, recheck the valve clearance, firmly tighten the lock nut of the adjusting screw.**

Adjustable cylinder location of piston \ **Valve arrangement**		**IN.**	**EX.**
When No. 1 piston is compression top dead center	No. 1	☆	☆
	No. 2		☆
	No. 3	☆	
When No. 1 piston is overlap position	No. 1		
	No. 2	☆	
	No. 3		☆

(1) TC Mark Line
(2) Timing Window

A : Valve Clearance

W1040087

(3) Top Clearance

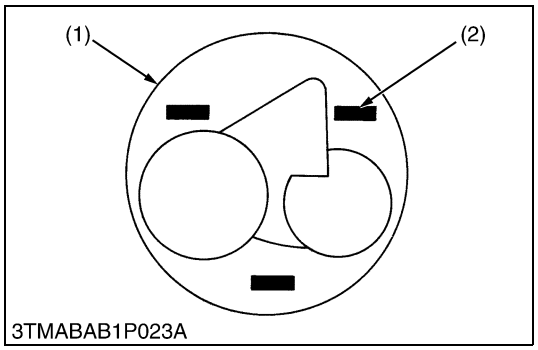

3TMABAB1P023A

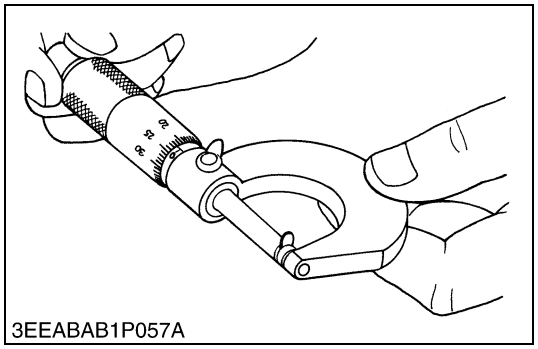
3EEABAB1P057A

Top Clearance

1. Remove the cylinder head.
2. Move the piston and place a strip of fuse on the piston head at three positions with grease.
3. Lower the piston, and install the cylinder head. (Use a new cylinder head gasket and tighten with a specified tightening torque.)
4. Turn the flywheel until the piston through the T.D.C..
5. Remove the cylinder head, and measure the thickness of the fuses.
6. If the measurement is not within the factory specifications, check the oil clearance between the crankpin and crankpin and bearing and between the piston pin and bushing.

■ **NOTE**

- **After checking the top clearance, be sure to assemble the cylinder head with a new cylinder head gasket.**

Top clearance	Factory spec.	0.55 to 0.70 mm 0.0217 to 0.0276 in.

Tightening torque	Cylinder head screws	93.2 to 98.1 N·m 9.5 to 10.0 kgf·m 68.7 to 72.3 ft-lbs

(1) Piston (2) Fuse

W1020190

(4) Engine Oil Pressure

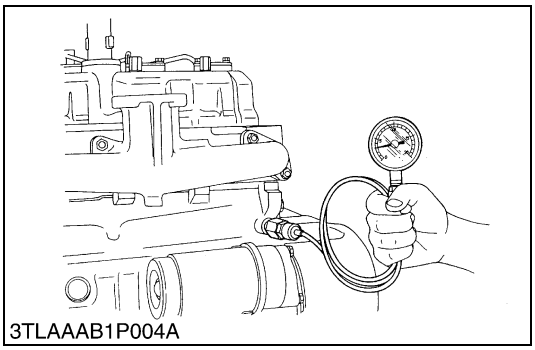
3TLAAAB1P004A

Engine Oil Pressure

1. Remove the engine oil pressure switch, and set an oil pressure tester. (Code No. : 07916-32032). (Adaptor screw size : PT 1/8)
2. Start the engine. After warming up, measure the oil pressure of both idling and rated speeds.
3. If the oil pressure is less than the allowable limit, check the following.

- Engine oil insufficient
- Oil pump defective
- Oil strainer clogged
- Oil filter cartridge clogged
- Oil gallery clogged
- Excessive oil clearance
- Foreign matter in the relief valve

Engine oil pressure	At idle speed	Factory spec.	More than 98 kPa 1.0 kgf/cm^2 14 psi
		Allowable limit	49 kPa 0.5 kgf/cm^2 7 psi
	At rated speed	Factory spec.	294 to 441 kPa 3.0 to 4.5 kgf/cm^2 42.7 to 64.0 psi
		Allowable limit	245 kPa 2.5 kgf/cm^2 35.6 psi

(When reassembling)

- After checking the engine oil pressure, tighten the engine oil pressure switch to the specified torque.

Tightening torque	Oil pressure switch	14.7 to 19.6 N·m 1.5 to 2.0 kgf·m 10.8 to 14.5 ft-lbs

W10480010

(5) Fan Belt

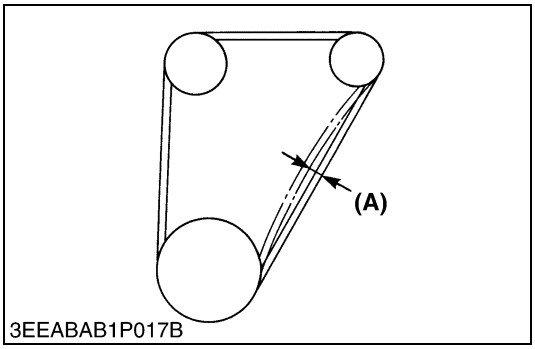

3EEABAB1P017B

Fan Belt Tension

1. Measure the deflection **(A)**, depressing the belt halfway between the fan drive pulley and alternator pulley at specified force (98 N, 10 kgf, 22 lbs).
2. If the measurement is not within the factory specifications, loosen the alternator mounting screws and relocate the alternator to adjust.

Deflection **(A)**	Factory spec.	7.0 to 9.0 mm 0.28 to 0.35 in.

(A) Deflection

W10356670

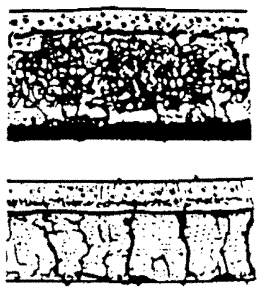

3EEABAB1P019A

Fan Belt Damage and Wear

1. Check the fan belt for damage.
2. If the fan belt is damaged, replace it.
3. Check if the fan belt is worn and sunk in the pulley groove.
4. If the fan belt is nearly worn out and deeply sunk in the pulley groove, replace it.

(A) Good **(B) Bad**

W1016443

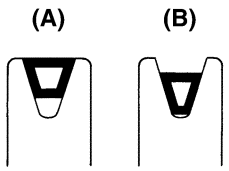

3EEABAB1P018A

(6) Radiator

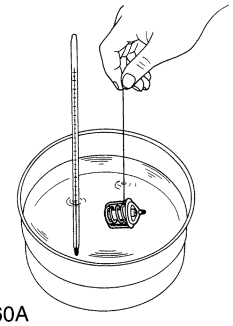

3EEABAB1P160A

Thermostat Valve Opening Temperature

1. Suspend the thermostat in the water by a string with its end inserted between the valve and seat.
2. Heating the water gradually, read the temperature when the valve opens and leaves the string.
3. Continue heating and read the temperature when the valve opens approx. 6 mm (0.236 in.).
4. If the measurement is not within the factory specifications, replace the thermostat.

Thermostat's valve opening temperature	Factory spec.	69.5 to 72.5 °C 157.1 to 162.5 °F
Temperature at which thermostat completely opens	Factory spec.	85 °C 185 °F

W1035849

3TLAAAC1P002A

Radiator Cap Air Leakage

CAUTION

- **When removing the radiator cap, wait at least ten minutes after the engine has stopped and cooled down. Otherwise, hot water way gush out, scalding nearby people.**

1. Set a radiator tester (Code No. 07909-31551) and an adaptor (BANZAI Code No. RCT-2A-30S) on the radiator cap.
2. Apply the specified pressure 88 kPa (0.9 kgf/cm^2, 13 psi), and measure the time for the pressure to fall to 59 kPa (0.6 kgf/cm^2, 9 psi).
3. If the measurement is less than the factory specification, replace the radiator cap.

Pressure falling time	Factory spec.	More than 10 seconds for pressure fall from 88 to 59 kPa (from 0.9 to 0.6 kgf/cm^2, from 13 to 9 psi)

W1054156

https://truckmanualshub.com/

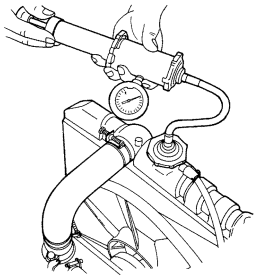
3EEABAB1P161A

Radiator Water Leakage

1. Pour a specified amount of water into the radiator.
2. Set a radiator tester (Code No. 07909-31551) with an adapter (BANZAI Code No. RCT-2A-30S) and raise the water pressure to the specified pressure.
3. Check the radiator for water leaks.
4. If any water leaks are detected, replace the radiator or repair with the radiator cement. If the water leak is excessive, replace the radiator.

Radiator water leakage test pressure	Factory spec.	No leak at 137 kPa 1.4 kgf/cm^2 20 psi

W1016903

(7) Injection Pump

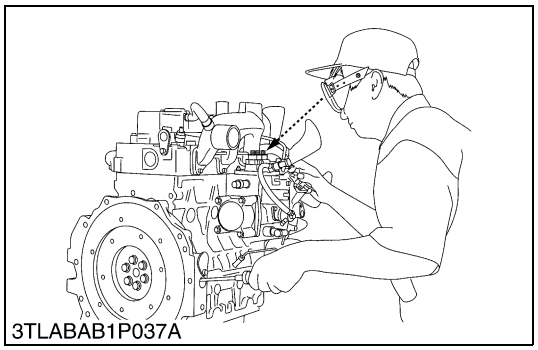
3TLABAB1P037A

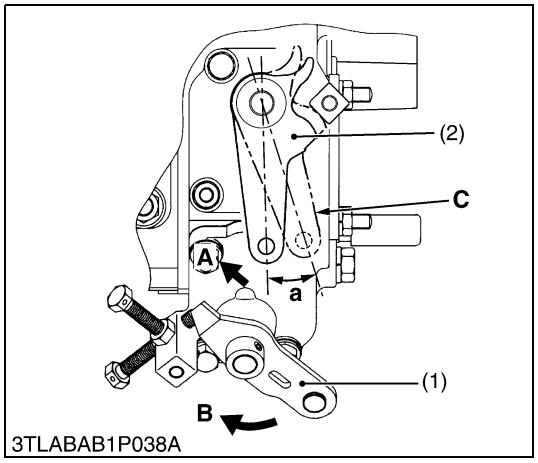

3TLABAB1P038A

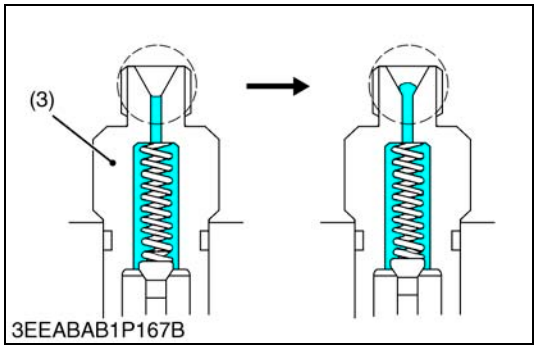

3EEABAB1P167B

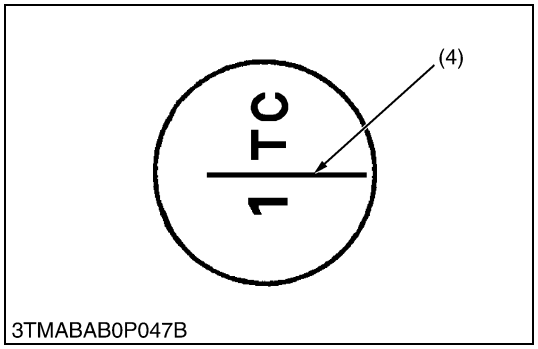

3TMABAB0P047B

Injection Timing

1. Remove the stop solenoid.
2. Remove the injection pipes and nozzle.
3. Set the speed control lever to maximum fuel discharge position.

(Reference)

- Turn the flywheel with screwdriver.

4. Turn the flywheel counterclockwise (facing the flywheel) until the fuel fills up to the hole of the delivery valve holder for 1st cylinder.
5. Turn the flywheel further and stop turning when the fuel begins to flow over, to get the present injection timing.
6. (The flywheel has mark 1TC and four lines indicating every 0.087 rad (5°) of crank angle from 0.175 rad (10°) to 0.436 rad (25°) before mark 1TC) Calculate the angle which the center of the window points out. If the calculation differs from specified injection timing, add or remove the shim to adjust.

(Injection Timing)

Injection timing	Factory spec.	0.279 to 0.314 rad 16 to 18 ° B.T.D.C.

■ **NOTE**

- **The sealant is applied to both side of the soft metal gasket shim. The liquid gasket is not required for assembling.**
- **Shims are available in thickness of 0.20 mm, 0.25 mm and 0.30 mm. Combine these shims for adjustment.**
- **Addition or reduction of shim (0.05 mm, 0.0020 in.) delays or advances the injection timing by approx. 0.0087 rad (0.5°).**
- **In disassembling and replacing, be sure to use the same number of new gasket shims with the same thickness.**

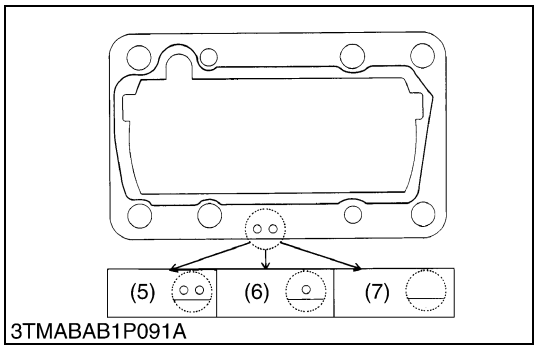

3TMABAB1P091A

(1) Speed Control Lever
(2) Stop Lever
(3) Delivery Valve Holder
(4) TC Mark Line
(5) 2-Holes : 0.20 mm (Shim)
(6) 1-Holes : 0.25 mm (Shim)
(7) Without Hole : 0.30 mm (Shim)

A : To STOP Position
B : To Max. Speed Position
C : Stop Lever in Free Position
a : 0.267 ± 0.035 rad (15.3 ° ± 2 °)

W1018724

https://truckmanualshub.com/

(8) Injection Nozzle

CAUTION

- **Check the nozzle injection pressure and condition after confirming that there is nobody standing in the direction of the injected fuel. If the injected fuel from the nozzle directly contacts the human body, cells may be destroyed and blood poisoning may be caused.**

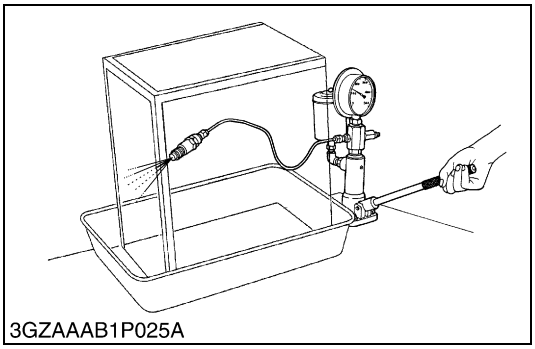
3GZAAAB1P025A

Nozzle Injection Pressure

1. Set the injection nozzle to a nozzle tester.
2. Slowly move the tester handle to measure the pressure at which fuel begins jetting out from the nozzle.
3. If the measurement is not within the factory specifications, replace the adjusting nozzle assembly.

Fuel injection pressure	Factory spec.	13.73 to 14.71 MPa 140 to 150 kgf/cm^2 1991 to 2133 psi

W10182100

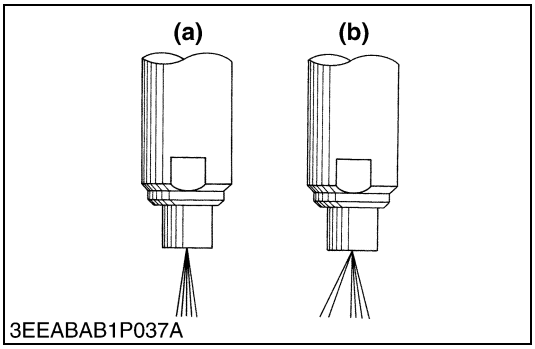

3EEABAB1P037A

Nozzle Spraying Condition

1. Set the injection nozzle to a nozzle tester (Code No. 07909-31361), and check the nozzle spraying condition.
2. If the spraying condition is defective, replace the nozzle piece.

(a) Good **(b) Bad**

W10181310

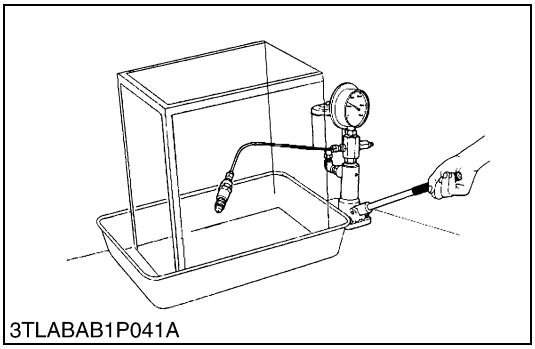
3TLABAB1P041A

Valve Seat Tightness

1. Set the injection nozzle to a nozzle tester (Code No. 07909-31361).
2. Raise the fuel pressure, and keep at 12.75 MPa (130 kgf/cm^2, 1849 psi) for 10 seconds.
3. If any fuel leak is found, replace the nozzle piece.

Valve seat tightness	Factory spec.	No fuel leak at 12.75 MPa 130 kgf/cm^2 1849 psi

W1113031

[2] PREPARATION

(1) Separating Engine and Clutch Housing

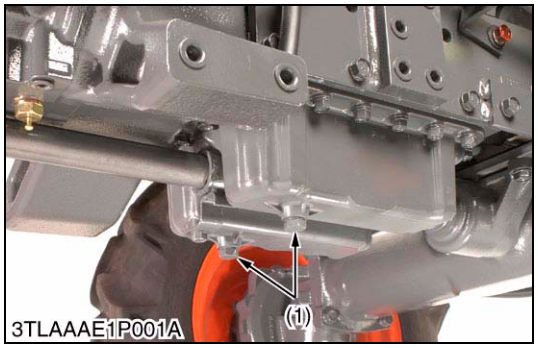

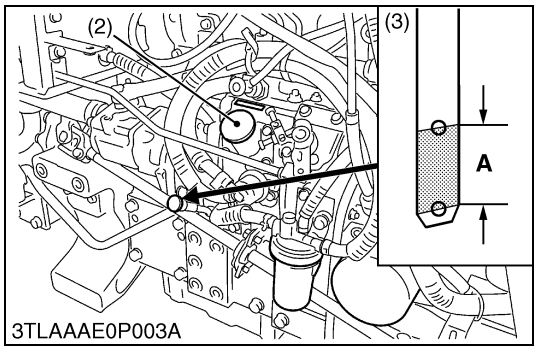

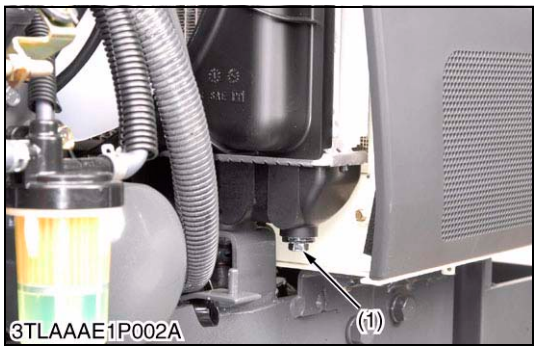

Draining Engine Oil

1. Start and warm up the engine for approx. 5 minutes.
2. Place an oil pan uderneath the engine.
3. Remove the drain plugs (1) to drain oil.
4. Screw in the drain plugs (1).

(When refilling)

- Fill the engine oil up to the upper line on the dipstick (2).

■ **IMPORTANT**

- **Never mix two different type of oil.**
- **Use the proper SAE Engine Oil according to ambient temperatures.**
  Refer to "LUBRICANTS, FUEL AND COOLANT". (See page G-6.)

Engine Oil	Capacity	6.0 L 5.7 U.S.qts 5.0 Imp.qts

(1) Drain Plug
(2) Dipstick
(3) Oil Inlet Plug

A : Oil level is acceptable within this range.

W1061746

Draining Coolant

CAUTION

- **Never remove the radiator cap until coolant temperature is well below its boiling point. Then loosen cap slightly to the stop to relieve any excess pressure before removing cap completely.**

1. Stop the engine and let cool down.
2. Loosen the drain plug (1) to drain the coolant.
3. Remove the radiator cap (3) to completely drain the coolant.
4. After all coolant is drained, retighten the drain plug (1).

Coolant (Radiator)	Capacity	6.0 L 6.3 U.S.qts 5.3 Imp.qts
Coolant (Recover tank)		0.6 L 0.63 U.S.qts 0.53 Imp.qts

(1) Drain Plug
(2) Recover Tank
(3) Radiator Cap

W1062137

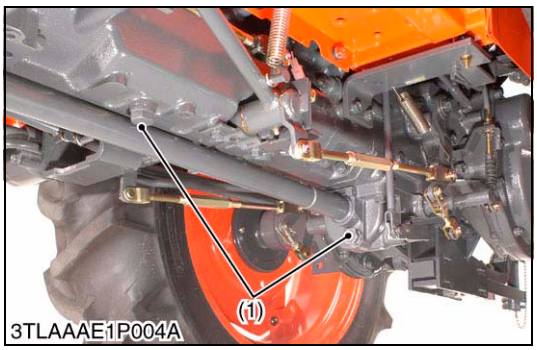

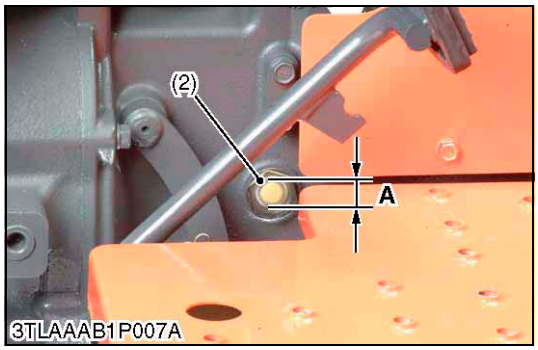

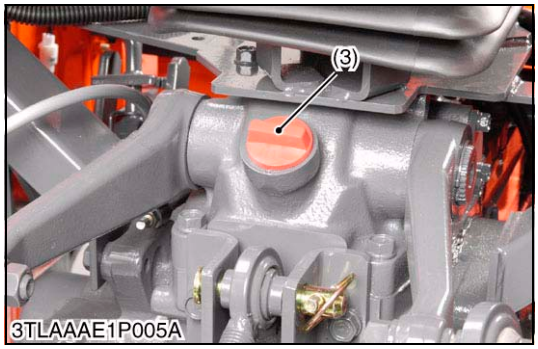

Draining the Transmission Fluid

1. Place an oil pan underneath the transmission case.
2. Remove the drain plugs (1) at the bottom of the transmission case.
3. Drain the transmission fluid.
4. Screw in the drain plugs (1).

(When reassembling)

- Full up new oil to the upper line of the gauge (2) from the filling port after removing the filling plug (3).
- After running the engine for a few minutes, stop it and check the fluid level again, if low, add fluid to the prescribed lever (**A**).

■ **IMPORTANT**

- **Use only multi-grade transmission fluid. Use of other fluids may damage the transmission or hydraulic system.**
- **Refer to "LUBRICANTS, FUEL AND COOLANT". (See page G-6.)**
- **Never work the tractor immediately after changing the transmission fluid. Keeping the engine at medium speed for a few minutes to prevent damage to the transmission.**
- **Do not mix different brands oil together.**

Transmission fluid	Capacity	27.5 L 7.3 U.S.qts 6.1 Imp.qts

(1) Drain Plug
(2) Gauge
(3) Filling Plug

A : Oil level is acceptable within this range.

W1062402

ROPS Upper and Lower Frame (Center ROPS Type)

1. Secure upper frame (1) with safety strap (2).
2. Remove upper frame (1) from lower frame (3).
3. Remove lower frame (3).

(When reassembling)

■ **NOTE**

- **Do not firmly tighten all screws until most components are attached.**

Tightening torque	Lower frame mounting screw	260 to 304 N·m 26.5 to 31.0 kgf·m 192 to 224 ft-lbs

(1) Upper Frame
(2) Safety Strap
(3) Lower Frame

W1063187

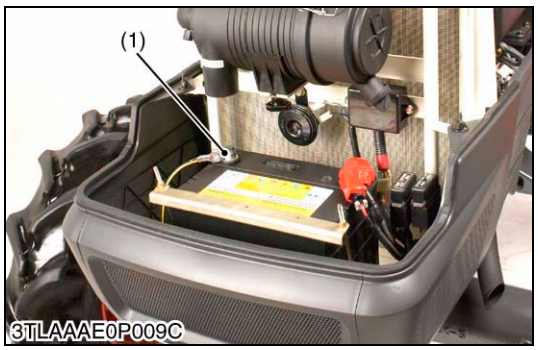

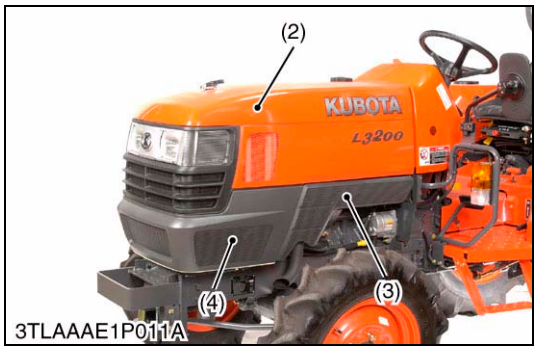

Bonnet and Front Cover

1. Disconnect the battery negative cable (1).
2. Disconnect the connector to head light and the head light wiring.
3. Remove bonnet (2) and side covers (3) on both sides.
4. Remove the front cover (4).

(1) Battery Negative Cable
(2) Bonnet
(3) Side Cover
(4) Front Cover

W1063478

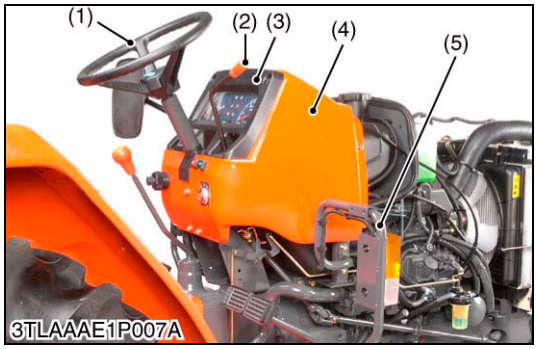

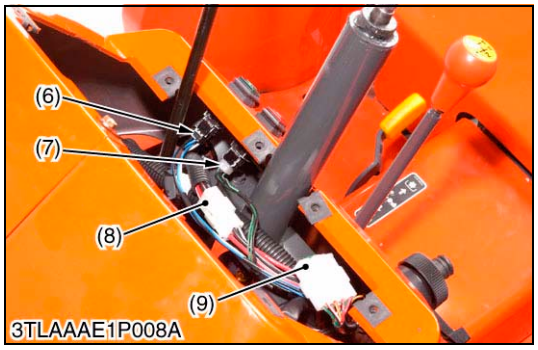

Steering Wheel and Rear Bonnet

1. Disconnect the connector to front position lamp and remove the front position lamp support (5).
2. Remove the steering wheel (1) with steering puller.
3. Remove the throttle grip (2).
4. Disconnect the hour-meter cable from the engine.
5. Remove the meter panel (3).
6. Disconnect the **5P** connector (6) to position light switch.
7. Disconnect the **4P** connector (7) to hazard light switch.
8. Disconnect the **4P** connector (8) to main switch.
9. Disconnect the **8P** connector (9) to combination switch.
10. Remove the rear bonnet (4).

(When reassembling)

Tightening torque	Steering wheel mounting nut	29.4 to 49.0 N·m 3.0 to 5.0 kgf·m 21.7 to 36.2 ft-lbs

(1) Steering Wheel
(2) Throttle Grip
(3) Meter Panel
(4) Rear Bonnet
(5) Front Position Lamp Support
(6) **5P** Connector
(7) **4P** Connector
(8) **4P** Connector
(9) **8P** Connector

W1064593

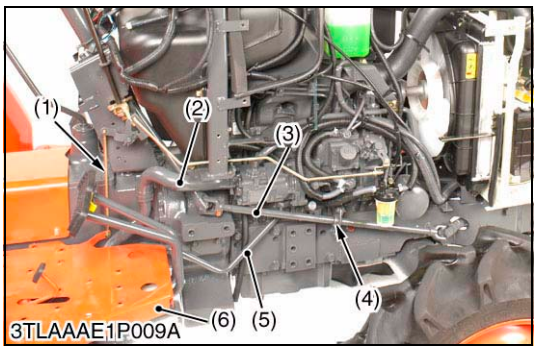

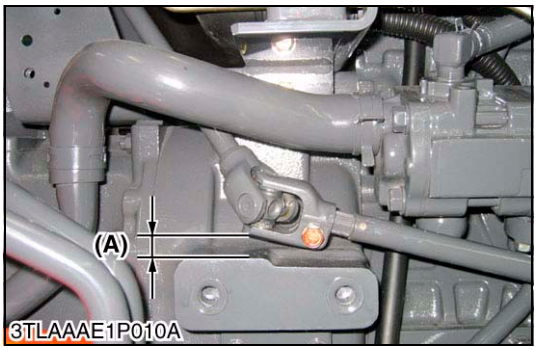

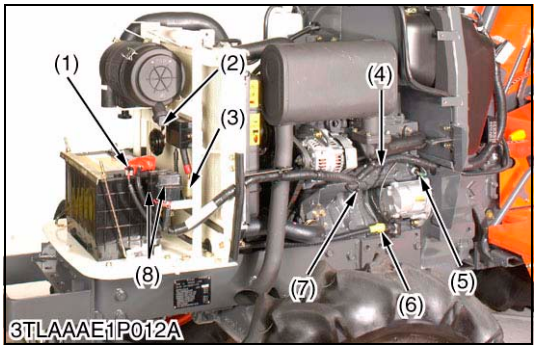

Suction Hose and Delivery Pipe

1. Disconnect the suction hose (2).
2. Remove the step (6) mounting screws.
3. Remove the steering joint shaft (3).
4. Remove the delivery pipe (5).
5. Remove the throttle rod (1).

(When reassembling)

- Lift the universal joint so that there should be a clearance **(A)** of more than 5 mm (0.19 in.) between the universal joint and flywheel housing.
  Then fit the support (4) in position.

Tightening torque	Delivery pipe joint bolt	49 to 69 N·m 5.0 to 7.0 kgf·m 36.1 to 50.6 ft-lbs

(1) Throttle Rod
(2) Suction Hose
(3) Steering Joint Shaft
(4) Support
(5) Delivery Pipe
(6) Step

W1065019

Wiring Harnesses (Left Side)

1. Disconnect **1P** battery connector (1) and remove slow below fuse boxes (8).
2. Disconnect horn terminals (2).
3. Disconnect **13P** connector to flasher unit (3).
4. Disconnect alternator wring harness (7).
5. Disconnect starter motor wiring harness (6).
6. Disconnect **1P** connector to engine oil pressure switch (5).
7. Put aside main wiring harness (4).

(1) **1P** Battery Connector
(2) Horn Terminals
(3) **13P** Connector
(4) Main Wiring Harness
(5) **1P** Connector
(6) Starter Motor Wiring Harness
(7) Alternator Wiring Harness
(8) Slow Blow Hose Boxes

W1065603

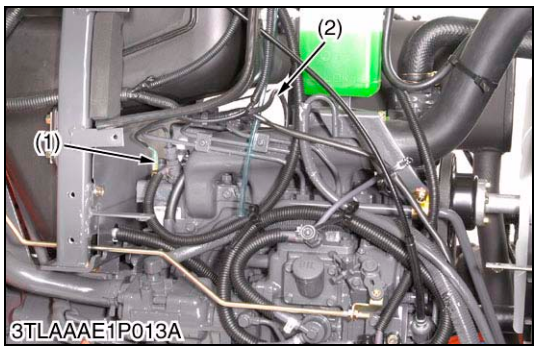

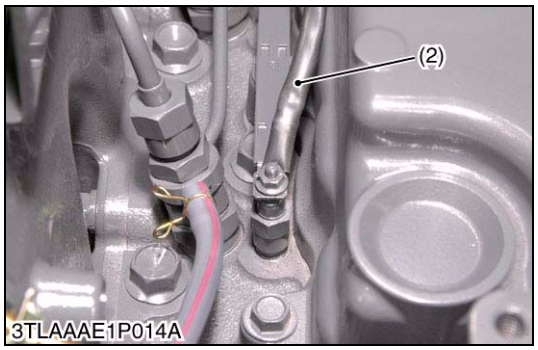

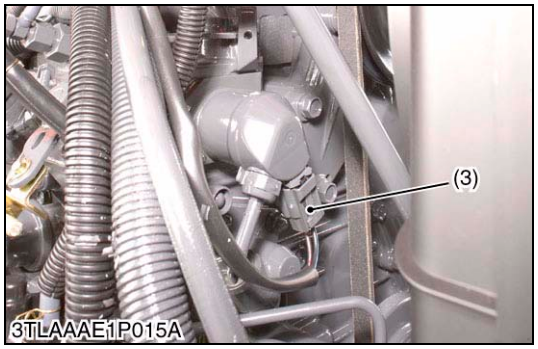

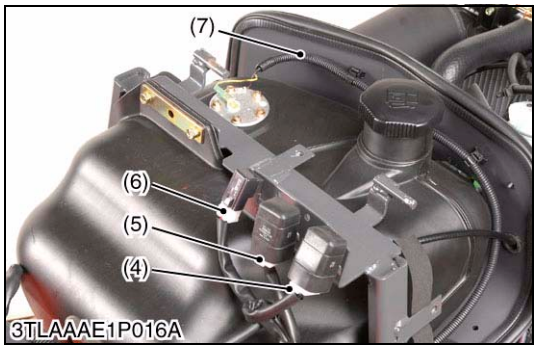

Wiring Harness (Right Side)

1. Disconnect **1P** connector to water temperature sensor (1).
2. Disconnect glow plug wiring harness (2).
3. Disconnect **2P** connector to key stop solenoid (3).
4. Disconnect fuel sensor wiring harness (7).
5. Disconnect **4P** connector to starter relay (6).
6. Disconnect **4P** connector to lamp relay (5).
7. Disconnect **4P** connector to key stop solenoid relay (4).

(1) **1P** Connector
(2) Glow Plug Wiring Harness
(3) **2P** Connector
(4) **4P** Connector to Key Stop Solenoid Relay
(5) **4P** Connector to Lamp Relay
(6) **4P** Connector to Starter Relay
(7) Fuel Sensor Wiring Harness

W1065917

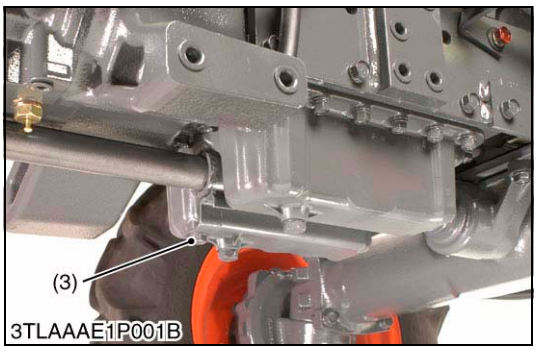

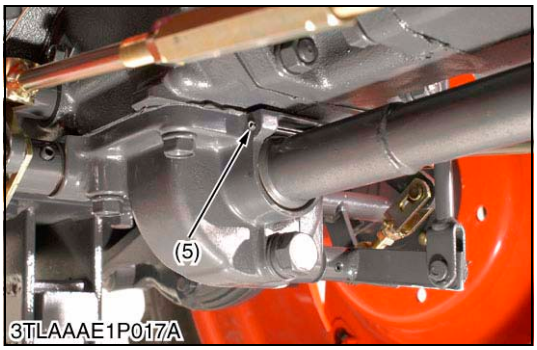

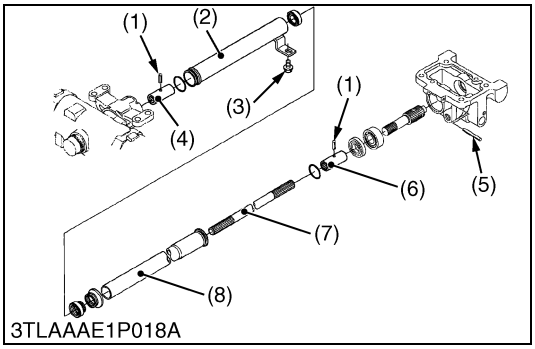

Propeller Shaft

1. Remove the screw (3) then tap out the spring pin (5).
2. Slide the propeller shaft cover 1 (8) to the front and the cover 2 (2) to the rear.
3. Tap out the spring pins (1) and then slide the coupling (6) to the front and coupling (4) to the rear.

(When reassembling)

- Apply grease to the splines of the propeller shaft (7) and pinion shaft.

(1) Spring Pin
(2) Propeller Shaft Cover 2
(3) Screw
(4) Coupling
(5) Spring Pin
(6) Coupling
(7) Propeller Shaft
(8) Propeller Shaft Cover 1

W1066505

Separating Engine from Clutch Housing Case

1. Check the engine and clutch housing case are securely mounted on the disassembling stands.
2. Remove the engine mounting screws, and separate the engine from the clutch housing case.

(When reassembling)

- Apply grease to the splines.
- Apply liquid gasket (Three Bond 1208D or equivalent) to joint face of the engine and clutch housing case.

Tightening torque	Engine mounting screws to clutch housing	48.1 to 55.8 N·m 4.9 to 5.7 kgf·m 35.4 to 41.2 ft-lbs

W1067100

Clutch Assembly

1. Insert the clutch center tool.
2. Remove the clutch assembly together with the clutch center tool.

(When reassembling)

- Direct the shorter end of the clutch disc boss toward the flywheel.
- Apply molybdenum disulphide (Three Bond 1901 or equivalent) to the splines of clutch disc boss.
- Insert the pressure plate, noting the position of straight pins.

■ **IMPORTANT**

- **Be sure to align the center of disc and flywheel by inserting the clutch tool set.**

■ **NOTE**

- **Do not allow grease and oil on the clutch disc facing.**

Tightening torque	Clutch mounting screws and reamer screws	23.5 to 27.5 N·m 2.4 to 2.8 kgf·m 17.4 to 20.3 ft-lbs

W1067297

(2) Separating Engine from Front Axle Frame

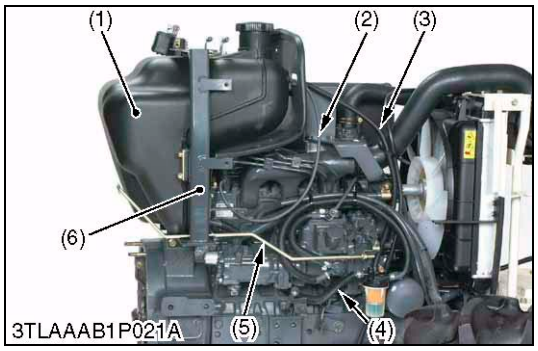

Fuel Tank

1. Disconnect the fuel pipe (4) and drain the fuel.
2. Disconnect the return furl pipe (2), (3).
3. Remove the fuel tank mounting screws.
4. Remove the fuel tank (1).
5. Remove the fuel tank support (6).
6. Remove the throttle rod (5).

(1) Fuel Tank
(2) Return Fuel Pipe
(3) Return Fuel Pipe
(4) Fuel Pipe
(5) Throttle Rod
(6) Fuel Tank Support

W1067362

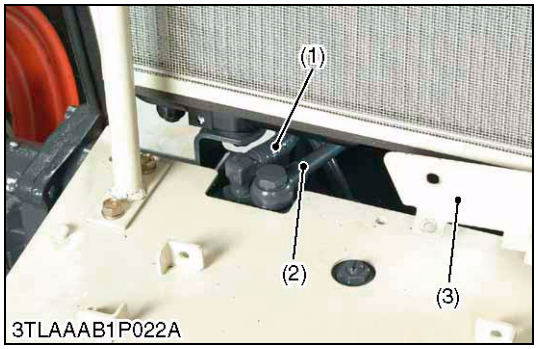

Power Steering Delivery Pipe and Return Hose

1. Remove the shutter plate (3).
2. Disconnect the power steering delivery pipe (2).
3. Disconnect the power steering return hose (1).

(When reassembling)

Tightening torque	Delivery pipe joint bolt	34 to 39 N·m 3.5 to 4.0 kgf·m 25.3 to 28.9 ft-lbs

(1) Power Steering Return Pipe
(2) Power Steering Delivery Pipe
(3) Shutter Plate

W98756432

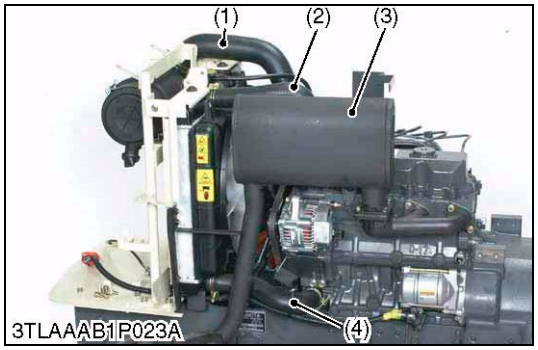

Radiator Hose and Muffler

1. Remove the muffler (3).
2. Disconnect the radiator hose (2), (4).
3. Disconnect the air cleaner hose (1).

(When reassembling)

Tightening torque	Muffler mounting screw	31.4 to 37.2 N·m 3.2 to 4.0 kgf·m 23.1 to 27.5 ft-lbs

(1) Air Cleaner Hose
(2) Radiator Hose
(3) Muffler
(4) Radiator Hose

W23568914

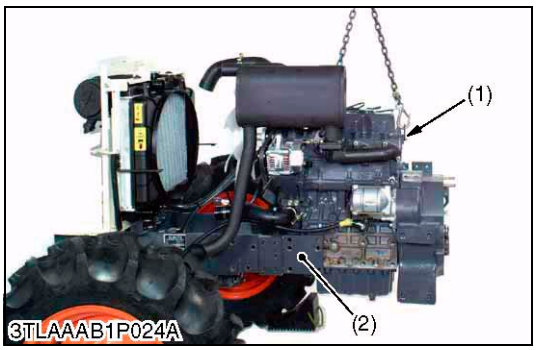

Separating Engine from Front Axle Frame

1. Hoist the engine using chains securely attached to the engine lift points (1).
2. Remove the front axle frame mounting screw.
3. Separate the engine from the front axle frame (2).

(When reassembling)

- Lift the front of the front axle frame using unused bolt holes, and tighten the front axle mounting screws.

Tightening torque	Front axle frame mounting screw (M12)	102.9 to 117.6 N·m 10.5 to 12.5 kgf·m 76.0 to 86.8 ft-lbs

(1) Engine Hook (2) Front Axle Frame

W56897412

[3] DISASSEMBLING AND ASSEMBLING

(1) Cylinder Head and Valves

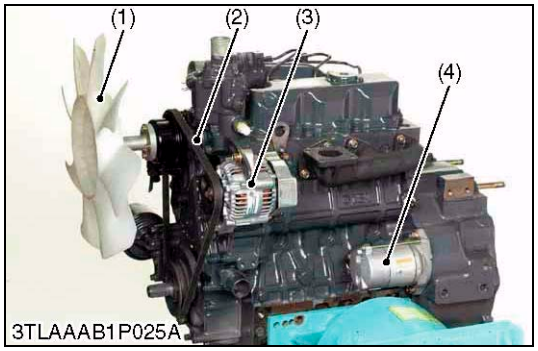

External Components

1. Attach the engine to the disassembling stand.
2. Remove the cooling fan.
3. Remove the alternator (3) and fan belt (2).
4. Remove the starter motor (4).

■ **IMPORTANT**

- **After reassembling the fan belt, be sure to adjust the fan belt tension. (See page 1-S13.)**

(1) Cooling Fan
(2) Fan Belt
(3) Alternator
(4) Starter Motor

W1069577

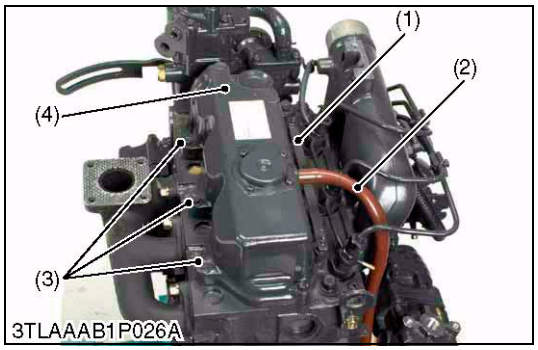

Cylinder Head Cover

1. Remove the lead (1).
2. Remove the breather hose (2).
3. Remove the head cover screws (3).
4. Remove the cylinder head cover (4).

(When reassembling)

- Check to see if the cylinder head cover gasket is not defective.

Tightening torque	Cylinder head cover screw	6.9 to 11.3 N·m 0.7 to 1.15 kgf·m 5.1 to 8.32 ft-lbs

(1) Lead
(2) Breather Hose
(3) Head Cover Screw
(4) Cylinder Head Cover
(5) Cylinder Head Cover Gasket
(6) Breather Valve
(7) Plate

W1028468

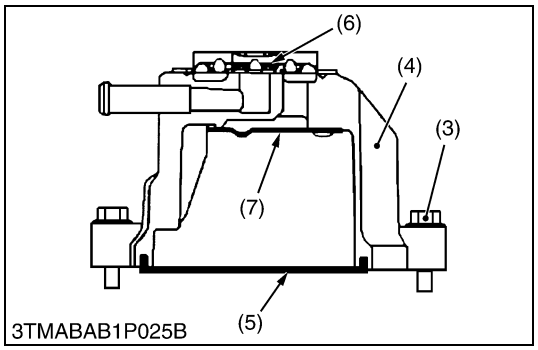

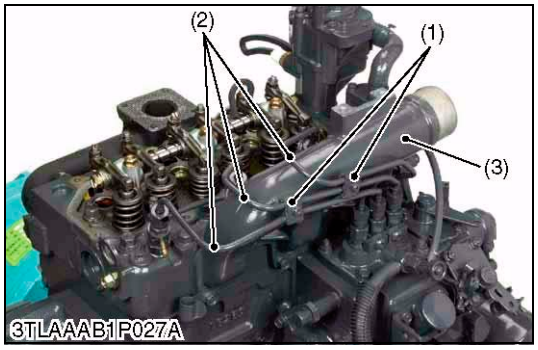

Injection Pipes

1. Loosen the screws on the pipe clamps (1).
2. Detach the injection pipes (2).
3. Remove the inlet Manifold (3).

(When reassembling)

- Blow out dust inside the pipes.

Tightening torque	Injection pipe retaining nut	24.5 to 34.3 N·m 2.5 to 3.5 kgf·m 18.1 to 25.3 ft-lbs

(1) Pipe Clamp
(2) Injection Pipe
(3) Inlet Manifold

W1028640

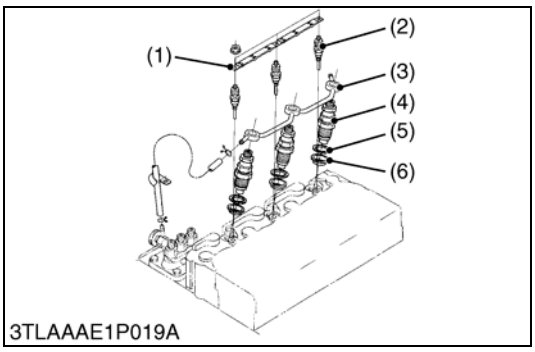

Nozzle Holder Assembly and Glow Plug

1. Remove the overflow pipe assembly (3).
2. Remove the nozzle holder assemblies (4) using a 21 mm deep socket wrench.
3. Remove the copper gasket (5) and heat seal (6).
4. Remove the glow plugs (1).

(When reassembling)

- Replace the copper gasket and heat seal with new one.

Tightening torque	Nozzle holder assembly	49.0 to 68.6 N·m 5.0 to 7.0 kgf·m 36.2 to 50.6 ft-lbs
	Overflow pipe assembly retaining nut	19.6 to 24.5 N·m 2.0 to 2.5 kgf·m 14.5 to 18.1 ft-lbs
	Glow plug	19.6 to 24.5 N·m 2.0 to 2.5 kgf·m 14.5 to 18.1 ft-lbs

(1) Lead
(2) Glow Plug
(3) Overflow Pipe Assembly
(4) Nozzle Holder Assembly
(5) Copper Gasket
(6) Heat Seal

W1024604

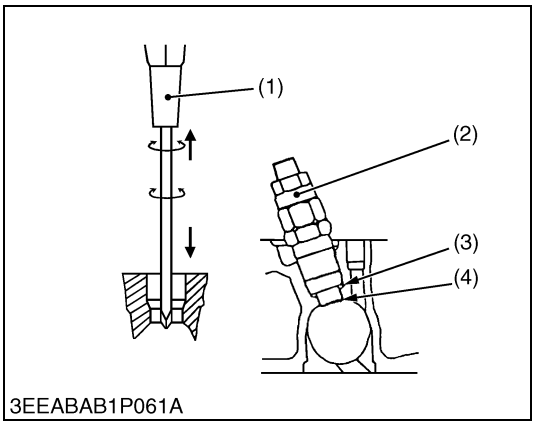

Nozzle Heat Seal Service Removal Procedure

■ **IMPORTANT**

- **Use a plus (phillips head) screw driver (1) that has a diameter which is bigger than the heat seal hole (Approx. 6 mm (1/4 in.)).**

1. Drive screw driver (1) lightly into the heat seal hole.
2. Turn screw driver three or four times each way.
3. While turning the screw driver, slowly pull the heat seal (4) out together with the copper gasket (3).
4. If the heat seal drops, repeat the above procedure.

(When reassembling)

- Heat seal and copper gasket must be changed when the injection nozzle is removed for cleaning or for service.

(1) Plus Screw Driver
(2) Nozzle Holder
(3) Copper Gasket
(4) Heat Seal

W1021255

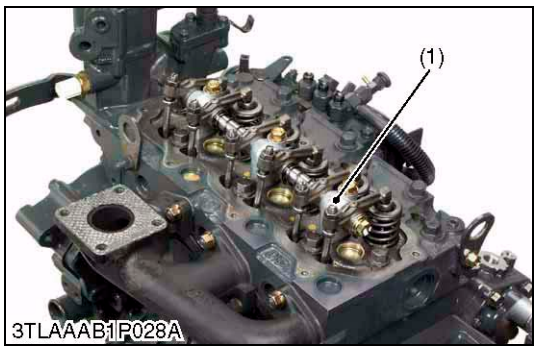

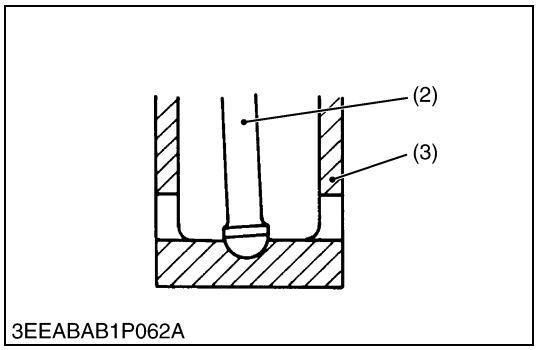

Rocker Arm and Push Rod

1. Remove the rocker arm bracket nuts.
2. Detach the rocker arm assembly (1).
3. Remove the push rods (2).

(When reassembling)

- When putting the push rods (2) onto the tappets (3), check to see if their ends are properly engaged with the grooves.

■ **IMPORTANT**

- **After installing the rocker arm, be sure to adjust the valve clearance.**

Tightening torque	Rocker arm bracket screw	23.5 to 27.5 N·m 2.4 to 2.8 kgf·m 17.4 to 20.3 ft-lbs

(1) Rocker Arm Assembly
(2) Push Rod
(3) Tappet

W1021437

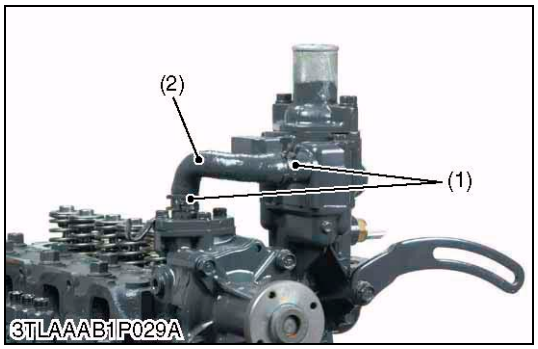

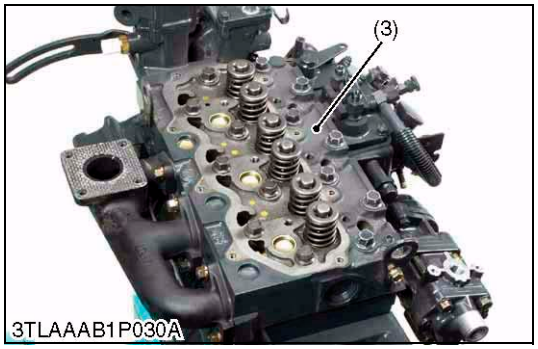

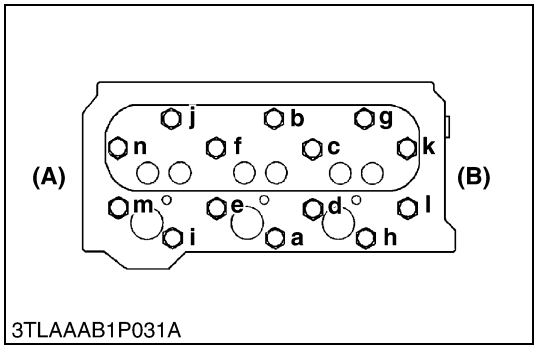

Cylinder Head

1. Loosen the pipe clamp (1), and remove the water return pipe (2).
2. Remove the cylinder head screw in the order of (**n**) to (**a**).
3. Lift up the cylinder head (3) to detach.
4. Remove the cylinder head gasket.

(When reassembling)

- Replace the cylinder head gasket with a new one.
- Tighten the cylinder head screws after applying sufficient oil.
- Tighten the cylinder head screws in diagonal sequence starting from the center in the order of (**a**) to (**n**).
- Tighten them uniformly, or the head may deform in the long run.

Tightening torque	Cylinder head screw	93.2 to 98.1 N·m 9.5 to 10.0 kgf·m 68.7 to 72.3 ft-lbs

(1) Pipe Clamp
(2) Return Pipe
(3) Cylinder Head

A : Gear Case Side
B : Flywheel Side
(n) to (a) : To Loosen
(a) to (n) : To Tighten

W1025645

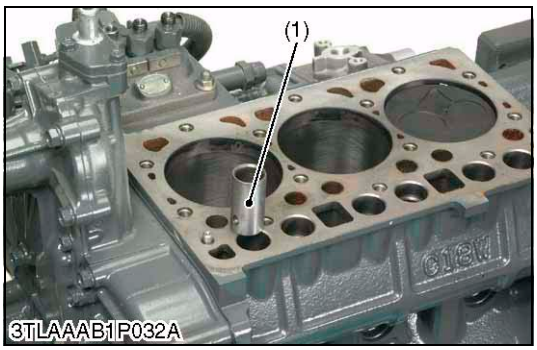

Tappets

1. Remove the tappets (1) from the crankcase.

(When reassembling)

- Visually check the contact between tappets and cams for proper rotation. If defect is found, replace tappets.
- Before installing the tappets, apply engine oil thinly around them.

■ **IMPORTANT**

- **Do not change the combination of tappet and tappet guide.**

(1) Tappet

W10209700

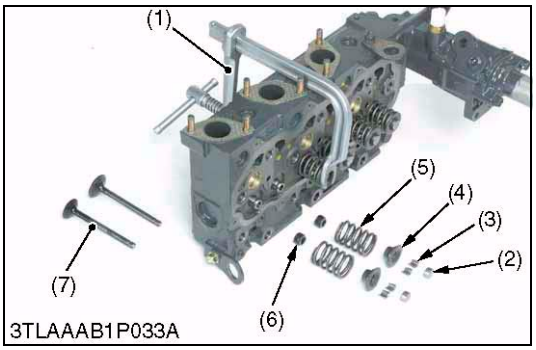

Valves

1. Remove the valve caps (2).
2. Remove the valve spring collet (3), pushing the valve spring retainer (4) by valve spring replacer (1).
3. Remove the valve spring retainer (4), valve spring (5) and valve stem seal (6).
4. Remove the valve (7).

(When reassembling)

- Wash the valve stem seal and valve guide hole, and apply engine oil sufficiently.
- After installing the valve spring collets, lightly tap the stem to ensure proper fit with a plastic hammer.

■ **IMPORTANT**

- **Don't change the combination of valve and valve guide.**

(1) Valve Spring Replacer
(2) Valve Cap
(3) Valve Spring Collet
(4) Valve Spring Retainer
(5) Valve Spring
(6) Valve Stem Seal
(7) Valve

W10211070

(2) Timing Gears, Camshaft and Fuel Camshaft

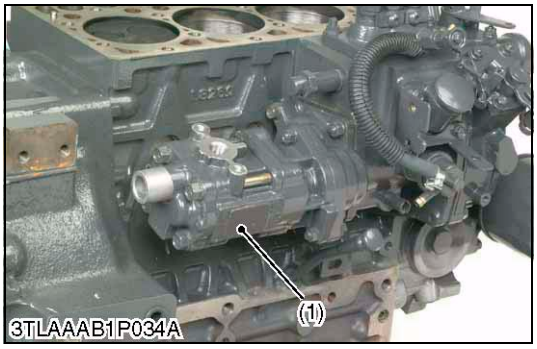

Hydraulic Pump

1. Remove the hydraulic pump mounting screws.
2. Detach the hydraulic pump (1).

(1) Hydraulic Pump

W1069814

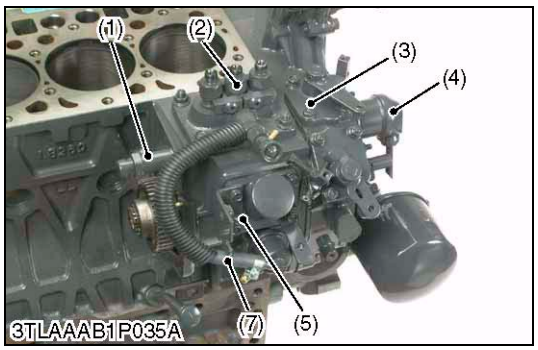

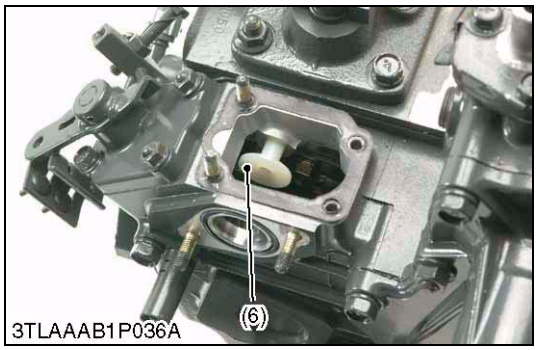

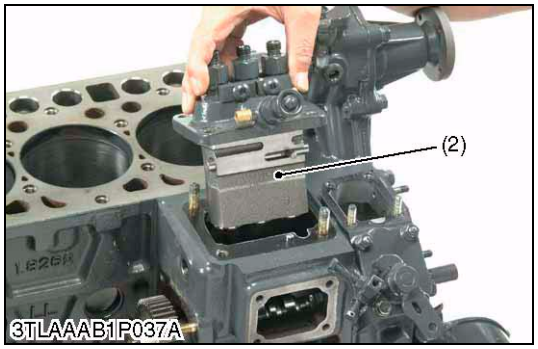

Injection Pump

1. Remove the stop solenoid (4) and hi-idling body (1).
2. Remove the engine stop lever (3) and stop solenoid guide (6).
3. Remove the fuel hose (7), pump cover (5) and fuel injection pump assembly (2).

■ **IMPORTANT**

- **Before removing the injection pump assembly (2), be sure to remove the stop solenoid (4), hi-idling body (1), engine stop lever (3) and stop solenoid guide (6).**

(When reassembling)

- Before attaching the stop solenoid, hi-idling body and solenoid guide, install the injection pump first into position.
- Replace the hi-idling body gasket with a new one.
- Before fitting the stop lever to the gear case, install the solenoid guide first into position. Then attach the stop lever and use it to see if it functions well.
- Before fitting the idling limiter in place, attach the solenoid guide and the engine stop lever in their respective positions.
- When installing the stop solenoid, be careful to keep the O-ring in place.
- Be sure to insert the push rod of the stop solenoid into the hole at the center of the solenoid guide.

Tightening torque	Hi-idling body	44.1 to 49.0 N·m 4.5 to 5.0 kgf·m 32.5 to 36.2 ft-lbs

(1) Hi-idling Body
(2) Injection Pump Assembly
(3) Stop Lever
(4) Stop Solenoid
(5) Pump Cover
(6) Stop Solenoid Guide
(7) Fuel Hose

W1070522

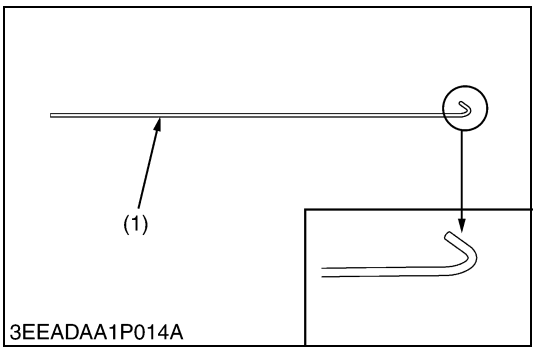

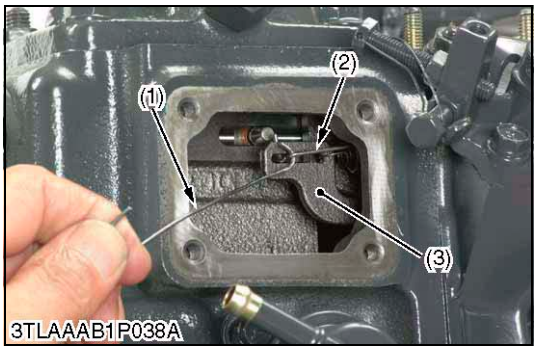

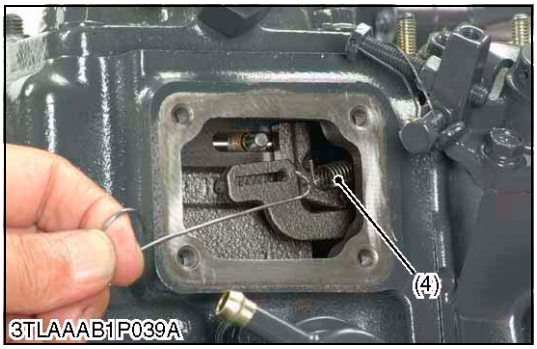

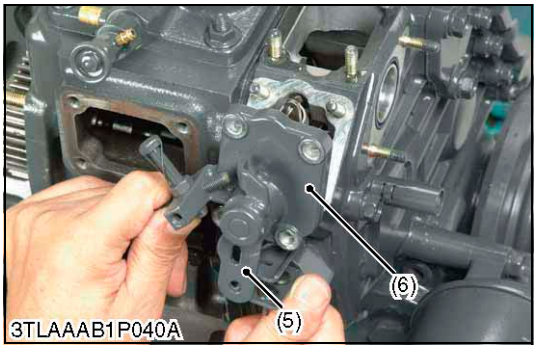

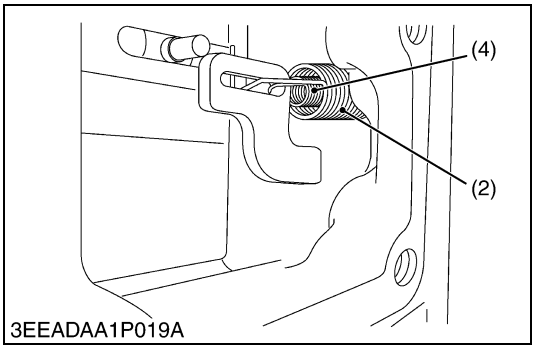

Governor Springs and Speed Control Plate

■ **NOTE**

- **Specific tool (1) :**
  1.2 mm diameter hard wire with its end hooked, overall length 200 mm (7.87 in.)
  The tip of wire is bent like a hook to hang around the ends of the governor springs.

1. Remove the injection pump cover.
2. Remove the speed control plate mounting nuts and bolts.
3. Using the specific tool (1), unhook the large governor spring (2) from the fork lever (3).
4. Using the specific tool, unhook the small governor spring (4) from the fork lever (3).
5. Set the speed control lever (5) as the photo.
6. Take out the speed control plate (6) with care not to let the large and small governor springs come off this plate and fall into the gear case.

(When reassembling)

- Hook the small spring (4) first and then the large governor spring (2) on the speed control plate (6).
- Put the specific tool (1) from the injection pump side to catch the large governor spring (2). Keep this spring slightly extended and place the speed control plate (6) in its specified position.
- Using the specific tool (1), hook the small governor spring onto the fork lever (3).

■ **NOTE**

- **Be careful not to stretch the small governor spring too long because otherwise it may be deformed permanently.**
- **Using the specific tool (1), hook the large governor spring (2) onto the fork lever (3).**
- **Make sure both the governor springs (2), (4) are tight on the fork lever (3).**
- **Apply and tighten up the two bolts and two nuts on the speed control plate (6).**
- **Check that the speed control lever (5) positions low idle, after assembling governor springs.**
- **Check that the speed control lever (5) returns to the high idle position rather than the low idle position, after moving the lever to the maximum speed position.**
- **Finally attach the injection pump cover in position.**

(1) Specific Tool
(2) Large Governor Spring
(3) Fork Lever
(4) Small Governor Spring
(5) Speed Control Lever
(6) Speed Control Plate

W1081350

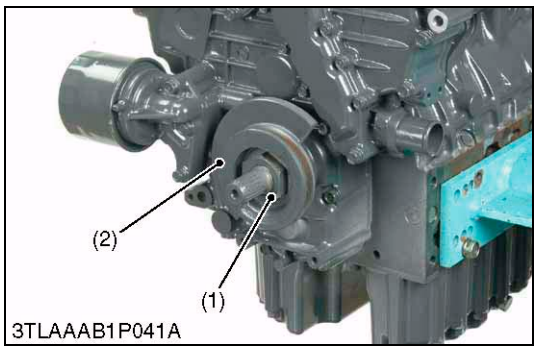

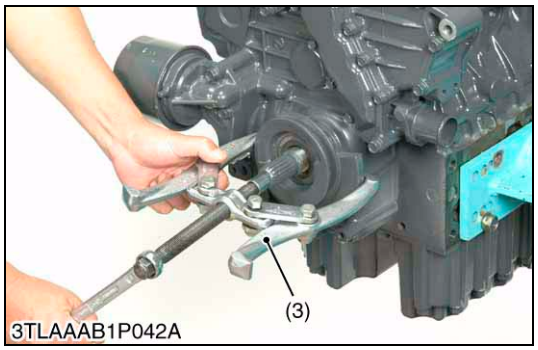

Fan Drive Pulley

1. Lock the flywheel not to turn using the flywheel stopper.
2. Remove the fan drive pulley mounting nut (1).
3. Remove the fan drive pulley (2) with gear puller (3).
4. Remove the feather key.

(When reassembling)

- Apply grease to the splines of coupling.

Tightening torque	Fan drive pulley mounting nut	137.3 to 156.9 N·m 14.0 to 16.0 kgf·m 101.3 to 115.7 ft-lbs

(1) Nut
(2) Fan Drive Pulley
(3) Gear Puller

W659873210

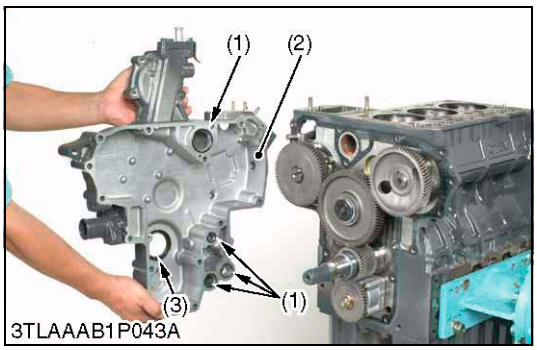

Gear Case

1. Remove the hour meter gear case.
2. Remove the gear case (2).
3. Remove the O-rings (1).

(When reassembling)

- Apply a liquid gasket (Three Bond 1215 or equivalent) to both sides of hour meter gear case gasket.
- Check to see if there are four O-rings (1) inside the gear case (2).
- Apply a thin film of engine oil to the oil seal (3), and install it, check the lip of the seal is not rolled or the spring dislodged.
- Before installing the gear case gasket, apply a non-drying adhesive.

(1) O-ring
(2) Gear Case
(3) Oil Seal

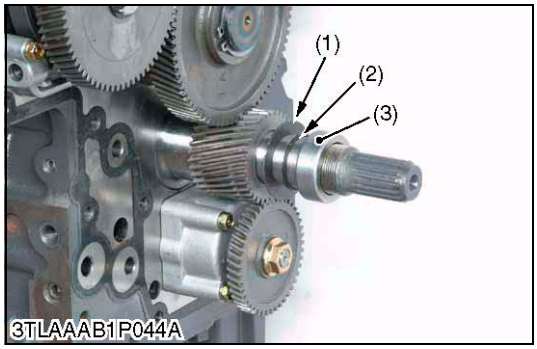

Crankshaft Oil Slinger

1. Remove the feather key.
2. Remove the crankshaft collar (3).
3. Remove the O-ring (2).
4. Detach the crankshaft oil slinger (1).

(1) Crankshaft Oil Slinger
(2) O-ring
(3) Crankshaft Collar

W1081429

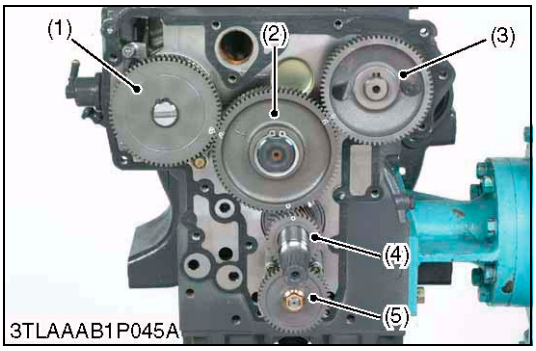

Idle Gear

1. Remove the external snap ring.
2. Detach the idle gear collar.
3. Detach the idle gear (2).

(When reassembling)

- Check to see each gear is aligned with its aligning mark.
  - Idle gear (2) and crank gear (4).
  - Idle gear (2) and camshaft gear (3).
  - Idle gear (2) and injection pump gear (1).

(1) Injection Pump Gear
(2) Idle Gear
(3) Cam Gear
(4) Crank Gear
(5) Oil Pump Drive Gear

W1081507

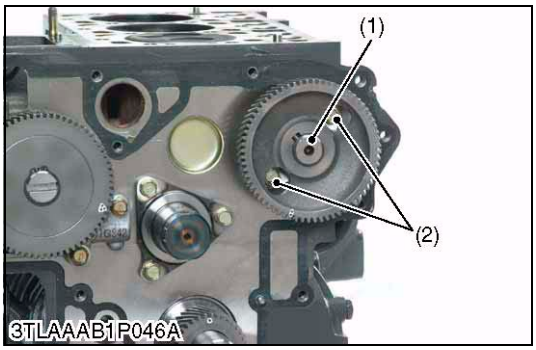

Camshaft

1. Remove the camshaft set screws (2) and draw out the camshaft (1).

(When reassembling)

- When installing the idle gear, be sure to align the alignment marks on gears.

Tightening torque	Camshaft set screw	23.5 to 27.5 N·m 2.4 to 2.8 kgf·m 17.4 to 20.3 ft-lbs

(1) Camshaft
(2) Camshaft Set Screw

W1030808

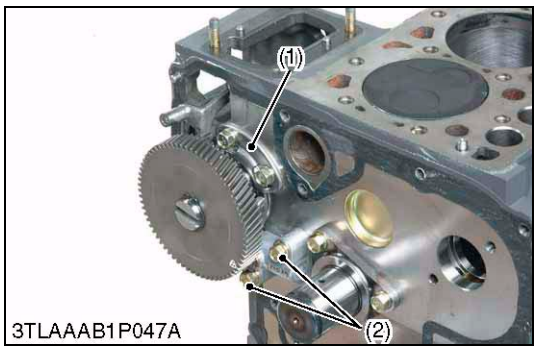

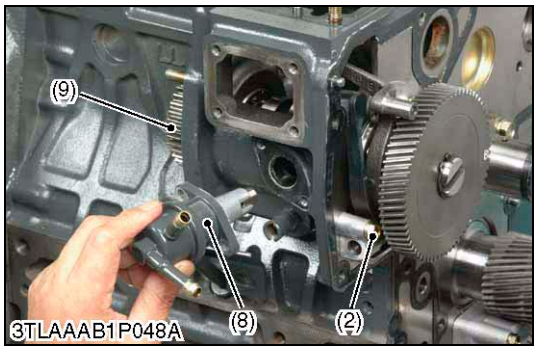

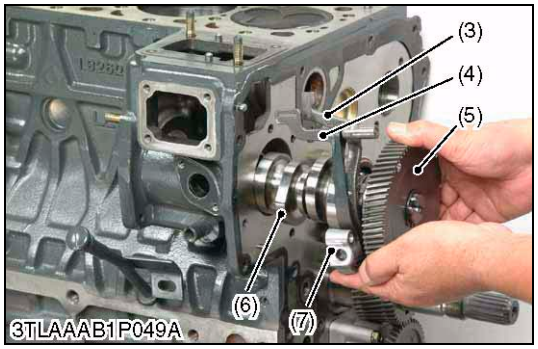

Fuel Camshaft and Fork Lever Assembly

1. Remove the fuel feed pump (8) and hydraulic pump drive gear (9).
2. Detach the fuel camshaft stopper (1).
3. Remove the three fork lever holder mounting screws (2).
4. Draw out the fuel camshaft assembly (5), (6) and fork lever assembly (3), (4), (7) at the same time.

(When reassembling)

- After installation, check to see that the fork lever 1 (3) and (4) are fixed to the fork lever shaft, and that they can turn smoothly in the holder (7).

(1) Fuel Camshaft Stopper
(2) Fork Lever Holder Mounting Screw
(3) Fork Lever 1
(4) Fork Lever 2
(5) Injection Pump Gear
(6) Fuel Camshaft
(7) Fork Lever Holder
(8) Fuel Feed Pump
(9) Hydraulic Pump Drive Gear

W10178820

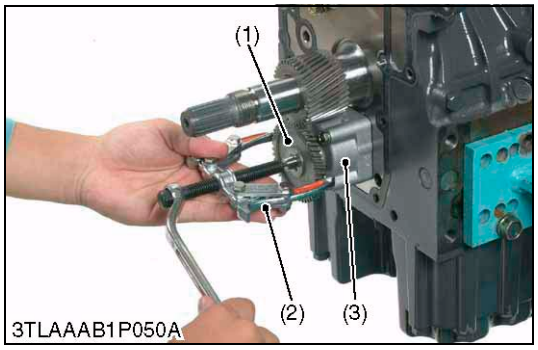

Oil Pump

1. Remove the nut.
2. Draw out the oil pump drive gear (1) with gear puller (2).
3. Remove the four oil pump mounting screws. Detach the oil pump (3).

(1) Oil Pump Drive Gear
(2) Gear Puller
(3) Oil Pump

W10180290

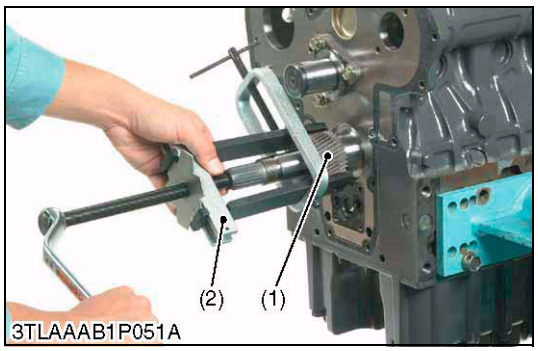

Crank Gear

1. Draw out the crank gear (1) with a puller (2).
2. Remove the feather key.

(1) Crank Gear
(2) Gear Puller

W1081584

https://truckmanualshub.com/

(3) Connecting Rod and Piston

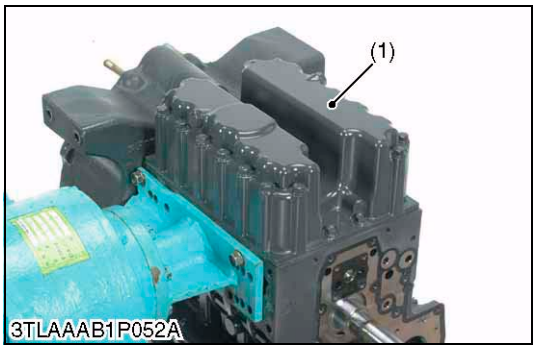

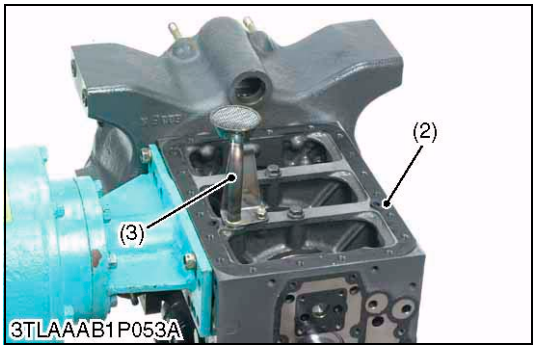

Oil Pan and Oil Strainer

1. Remove the oil pan mounting screws.
2. Remove the oil pan (1) by lightly tapping the rim of the pan with a wooden hammer.
3. Remove the oil pan gasket (2).
4. Remove the oil strainer (3) and O-ring.

(When reassembling)

- After cleaning the oil strainer, check to see that the filter mesh is clean before installing it.
- Visually check the O-ring, apply engine oil, and install it.
- Securely fit the O-ring to the oil strainer.
- Apply a liquid gasket (Three Bond 1215 or equivalent) to the oil pan side of the oil pan gasket.
- To avoid uneven tightening, tighten oil pan mounting screws in diagonal order from the center.

(1) Oil Pan
(2) Oil Pan Gasket
(3) Oil Strainer

W1086664

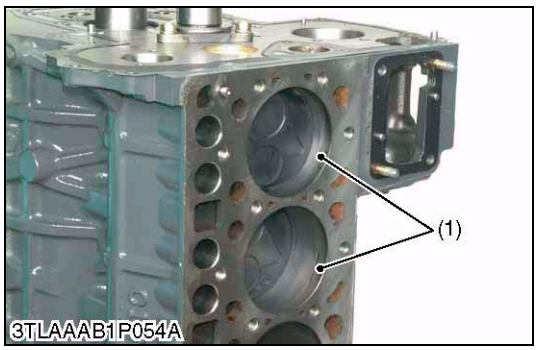

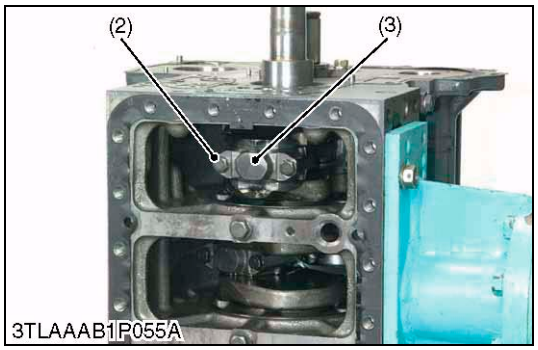

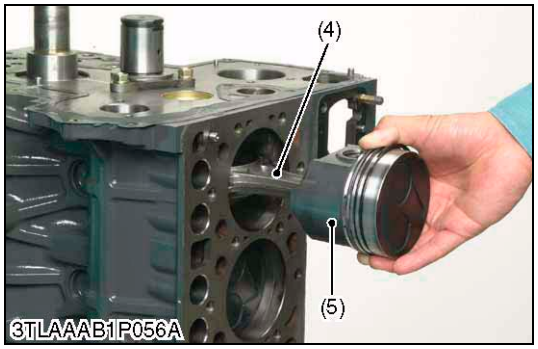

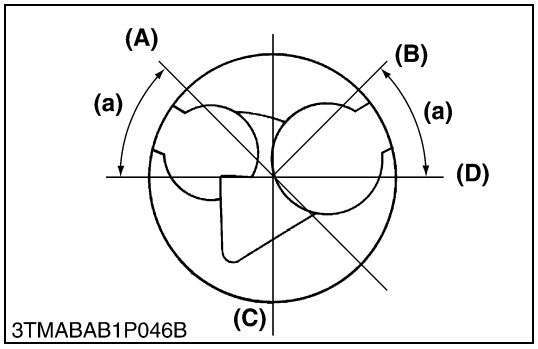

Pistons

1. Completely clean carbon (1) from the cylinders.
2. Remove the connecting rod cap (3).
3. Turn the flywheel and bring the piston to top dead center.
4. Draw out the piston upward by lightly tapping it from the bottom of the crankcase with the grip of a hammer.
5. Draw out the other piston in the same method as above.

(When reassembling)

- Before inserting piston into the cylinder, apply enough engine oil to the piston.
- When inserting the piston into the cylinder, face the mark on the connecting rod to the injection pump.

■ **IMPORTANT**

- **Do not change the combination of cylinder and piston. Make sure of the position of each piston by marking. For example, mark "1" on the No. 1 piston.**
- **Place the piston rings with their gaps at 0.79 rad (45°) from the piston pin's direction as shown in the figure.**
- **Carefully insert the pistons using a piston ring compressor.**
- **When inserting the piston in place, be careful not to damage the molybdenum disulfide coating on the piston skirt. This coating is useful in minimizing the clearance with the cylinder liner. Just after the piston pin has been press fitted, in particular, the piston is still hot and the coating is easy to peel off. Wait until the piston cools down.**

Tightening torque	Connecting rod screw	44.1 to 49.0 N·m 4.5 to 5.0 kgf·m 32.5 to 36.2 ft-lbs

(1) Carbon
(2) Connecting Rod Screw
(3) Connecting Rod Cap
(4) Connecting Rod
(5) Molybdenum Disulfide Coating in Piston Skirt

(A) Top Ring Gap
(B) Second Ring Gap
(C) Oil Ring Gap
(D) Piston Pin Hole
(a) 0.79 rad (45°)

W10277450

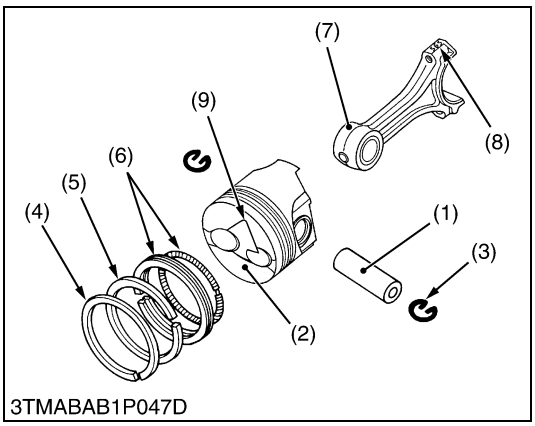

3TMABAB1P047D

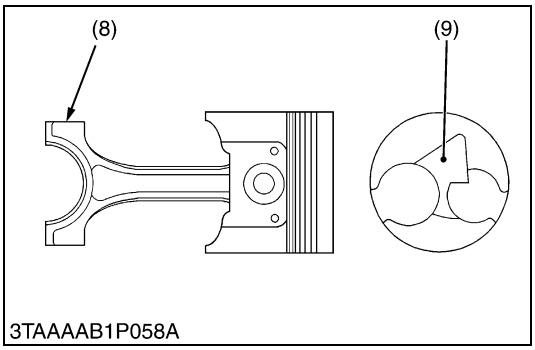

3TAAAAB1P058A

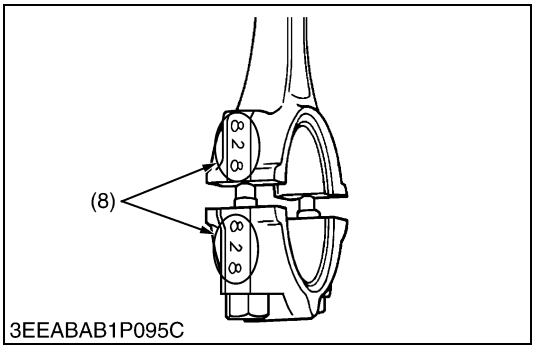

3EEABAB1P095C

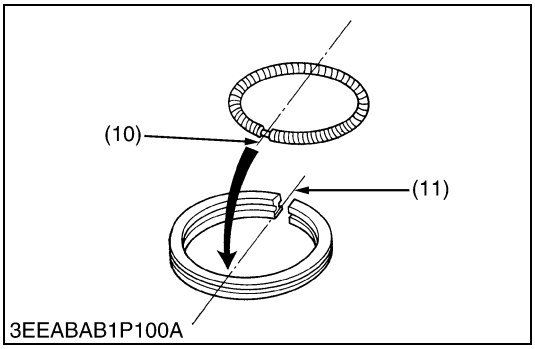

3EEABAB1P100A

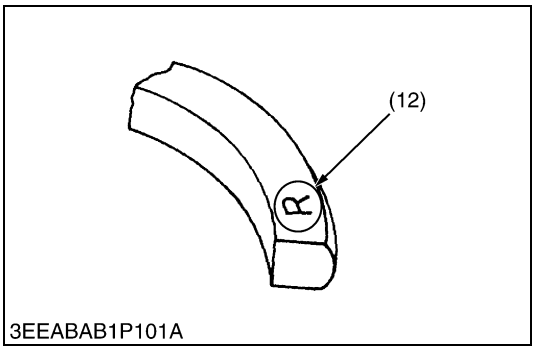

3EEABAB1P101A

Piston Ring and Connecting Rod

1. Remove the piston rings using a piston ring tool (Code No. 07909-32121).
2. Remove the piston pin (1), and separate the connecting rod (7) from the piston (2).

(When reassembling)

- When installing the ring, assemble the rings so that the manufacturer's mark (12) near the gap faces the top of the piston.
- When installing the oil ring onto the piston, place the expander joint (10) on the opposite side of the oil ring gap (11).
- Apply engine oil to the piston pin.
- When installing the piston pin, immerse the piston in 80 °C (176 °F) oil for 10 to 15 minutes and insert the piston pin to the piston.
- When installing the connecting rod to the piston, align the mark (8) on the connecting rod to the fan-shaped concave (9).

CAUTION

- **Extreme caution - HOT !**
- **Use of protective equipment during this process is recommended.**

IMPORTANT

- **Mark the same number on the connecting rod and the piston so as not to change the combination.**

(1) Piston Pin
(2) Piston
(3) Piston Pin Snap Ring
(4) Top Ring
(5) Second Ring
(6) Oil Ring
(7) Connecting Rod
(8) Mark
(9) Fan-Shaped Concave
(10) Expander Joint
(11) Oil Ring Gap
(12) Manufacturer's Mark

W10281670

(4) Crankshaft

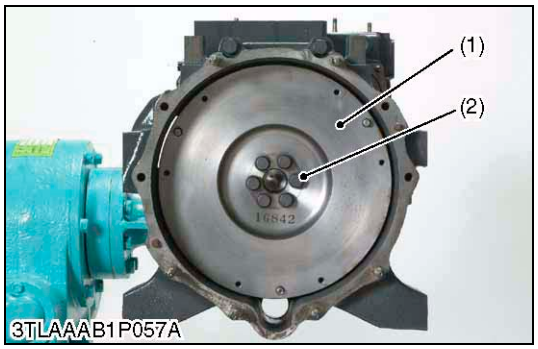

Flywheel

1. Fit the stopper to the flywheel (1).
2. Remove the all flywheel screws (2).
3. Remove the flywheel (1) slowly.

(When reassembling)

- Insert two flywheel guide screws.
- Check to see that there are no metal particles left on the flywheel mounting surfaces.
- Apply engine oil to the threads and the undercut surface of the flywheel screws before fitting.

Tightening torque	Flywheel screw	98.1 to 107.9 N·m 10.0 to 11.0 kgf·m 72.3 to 79.6 ft-lbs

(1) Flywheel (2) Flywheel Screw

W1030810

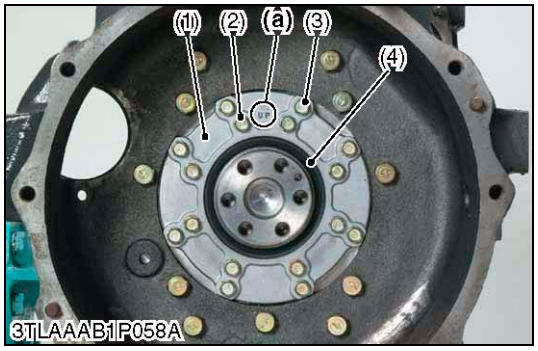

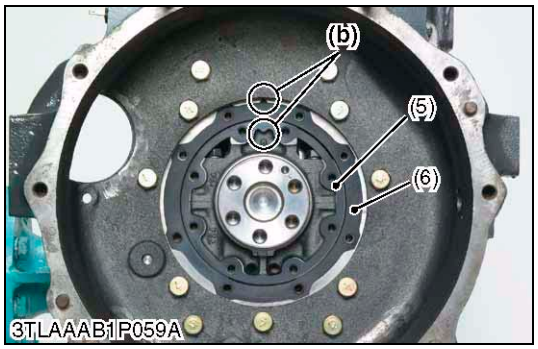

Bearing Case Cover

1. Remove the bearing case cover mounting screws. First, remove inside screws (2) and then outside screws (3).
2. Remove the bearing case cover (1).

■ **IMPORTANT**

- **The length of inside screws and outside screws are different. Do not make a mistake by mixing up the inside screws and outside screws.**

(When reassembling)

- Fit the bearing case gasket (5) and the bearing case cover gasket (6) in the correct direction **(b)**.
- Install the bearing case cover to position the casting mark **"UP" (a)** on it upward.
- Apply engine oil to the oil seal lip and take care that it is not rolled when installing.
- Tighten the bearing case cover mounting screws with even force on the diagonal line.

Tightening torque	Bearing case cover mounting screw	23.5 to 27.5 N·m 2.4 to 2.8 kgf·m 17.4 to 20.3 ft-lbs

(1) Bearing Case Cover
(2) Bearing Case Cover Mounting Screw
(3) Bearing Case Cover Mounting Screw
(4) Oil Seal
(5) Bearing Case Gasket
(6) Bearing Case Cover Gasket

(a) Mark "UP"
(b) Upside

W1031168

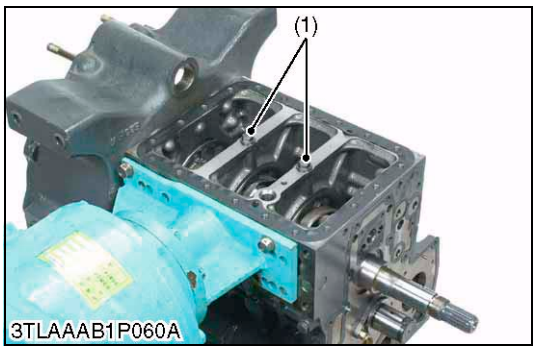

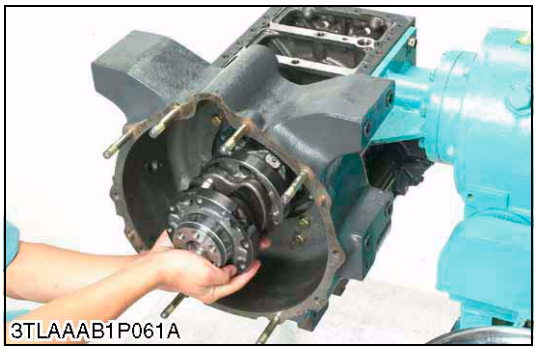

Crankshaft

■ **NOTE**

- **Before disassembling, check the side clearance of crankshaft. Also check it during reassembling.**

1. Remove the main bearing case screw 2 (1).
2. Pull out the crankshaft assembly, taking care not to damage the crankshaft bearing 1.

(When reassembling)

■ **IMPORTANT**

- **Install the crankshaft sub assembly, aligning the screw hole of main bearing case 2 with the screw hole of cylinder block.**
- **When tightening the main bearing case screw 2, apply oil to the screw and screw by hand before tightening the specific torque.**
  If not smooth to screw by hand, align the screw holes between the cylinder block and main bearing case.

Tightening torque	Main bearing case screw 2	68.6 to 73.5 N·m 7.0 to 7.5 kgf·m 50.6 to 54.2 ft-lbs

(1) Main Bearing Case Screw 2

W1099727

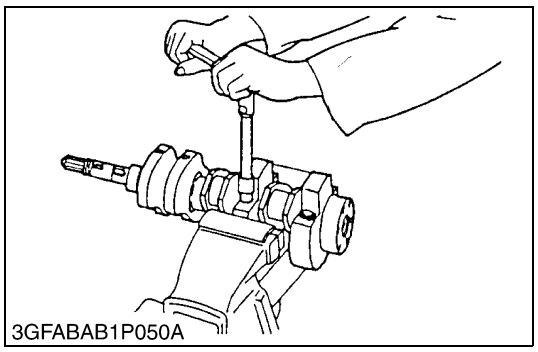
3GFABAB1P050A

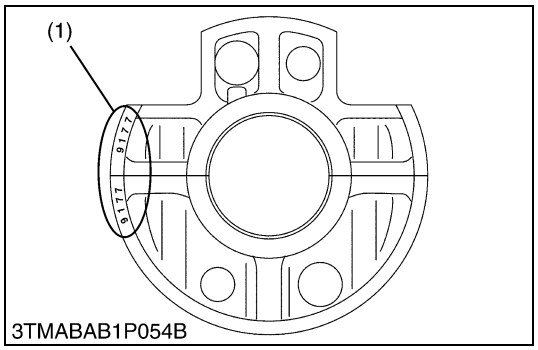

3TMABAB1P054B

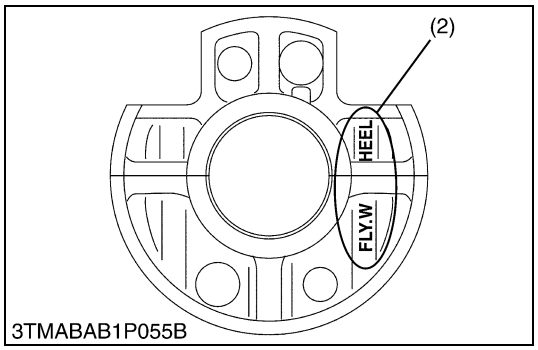

3TMABAB1P055B

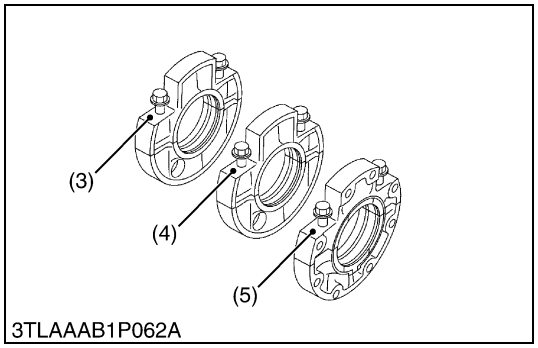

3TLAAAB1P062A

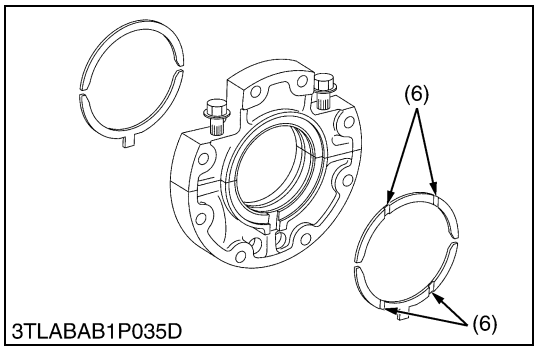

3TLABAB1P035D

Main Bearing Case Assembly

1. Remove the two main bearing case screws 1, and remove the main bearing case assembly being careful with thrust bearing and crankshaft bearing.
2. Remove the main bearing case 1, 2 as above.

(When reassembling)

- Clean the oil passage in the main bearing cases.
- Apply clean engine oil to the bearings.
- Install the main bearing case assemblies in the original positions. Since diameters of main bearing cases vary, install them in order of marking A, B from the gear case side.
- Match the alignment numbers (1) and Mark (2) on the main bearing case.
- When installing the main bearing case 1 and 2, face the mark **"FLYWHEEL"** to the flywheel.
- Install the thrust bearing with its oil groove facing (6) outward.
- Confirm that the main bearing case moves smoothly after tightening the main bearing case screw 1 to the specified torque.

Tightening torque	Main bearing case screw 1	46.1 to 51.0 N·m 4.7 to 5.2 kgf·m 34.0 to 37.6 ft-lbs

(1) Alignment Number
(2) Alignment Mark
(3) A
(4) B
(5) No Mark
(6) Oil Groove

W1034602

(5) Thermostat

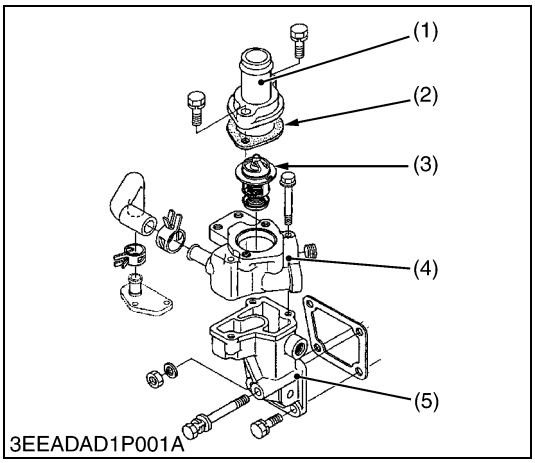

Thermostat Assembly

1. Remove the thermostat cover mounting screws, and remove the thermostat cover (1).
2. Remove the thermostat assembly (3).

(When reassembling)

- Apply a liquid gasket (Three Bond 1215 or equivalent) only at the thermostat cover side of the thermostat cover gasket (2).
- Apply a liquid gasket (Three Bond 1215 or equivalent) to the water flange 1 (4) and flange 2 (5)

(1) Thermostat Cover
(2) Thermostat Cover Gasket
(3) Thermostat Assembly
(4) Thermostat Flange 1
(5) Thermostat Flange 2

W1105115

(6) Injection Nozzle

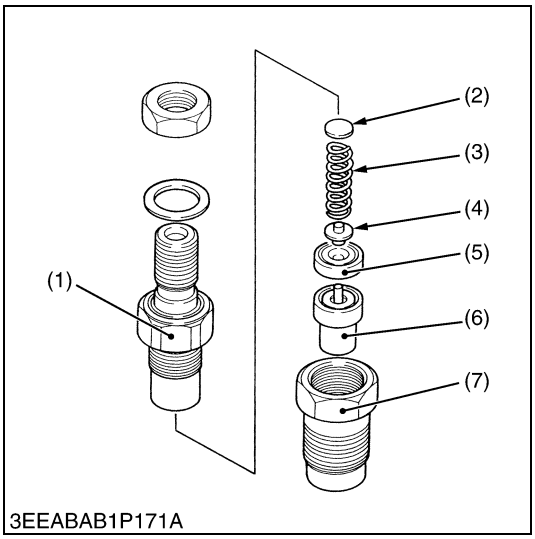

Nozzle Holder

1. Secure the nozzle retaining nut (7) with a vise.
2. Remove the nozzle holder (1), and take out parts inside.

(When reassembling)

- Assemble the nozzle in clean fuel oil.
- Install the push rod (4), noting its direction.
- After assembling the nozzle, be sure to adjust the fuel injection pressure.

Tightening torque	Nozzle holder	34.3 to 39.2 N·m 3.5 to 4.0 kgf·m 25.3 to 28.9 ft-lbs
	Overflow pipe nut	19.6 to 24.5 N·m 2.0 to 2.5 kgf·m 14.5 to 18.1 ft-lbs
	Nozzle holder assembly	49.0 to 68.6 N·m 5.0 to 7.0 kgf·m 36.2 to 50.6 ft-lbs

(1) Nozzle Holder
(2) Adjusting Washer
(3) Nozzle Spring
(4) Push Rod
(5) Distance Piece
(6) Nozzle Piece
(7) Nozzle Retaining Nut

W14789652

[4] SERVICING

(1) Cylinder Head and Valves

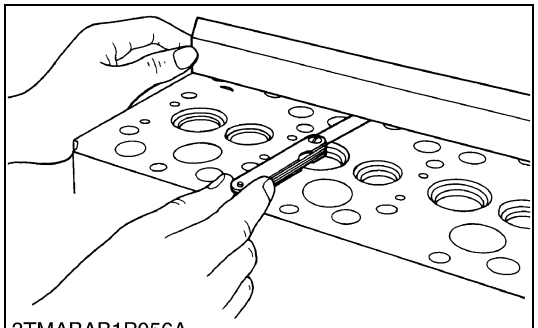
3TMABAB1P056A

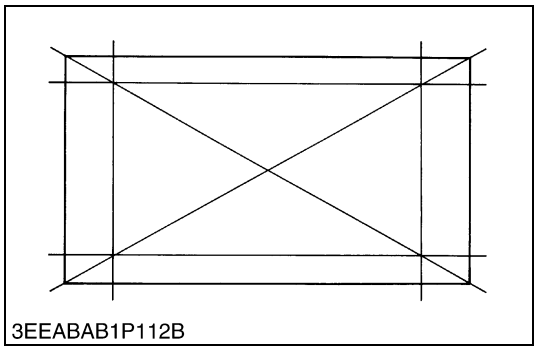
3EEABAB1P112B

Cylinder Head Surface Flatness

1. Clean the cylinder head surface.
2. Place a straightedge on the cylinder head's four sides and two diagonal as shown in the figure.
3. Measure the clearance with a feeler gauge.
4. If the measurement exceeds the allowable limit, correct it with a surface grinder.

■ **IMPORTANT**
- **Do not place the straightedge on the combustion chamber.**
- **Be sure to check the valve recessing after correcting.**

Cylinder head surface flatness	Allowable limit	0.05 mm (0.0020 in.) per 500 mm (19.69 in.)

W1027737

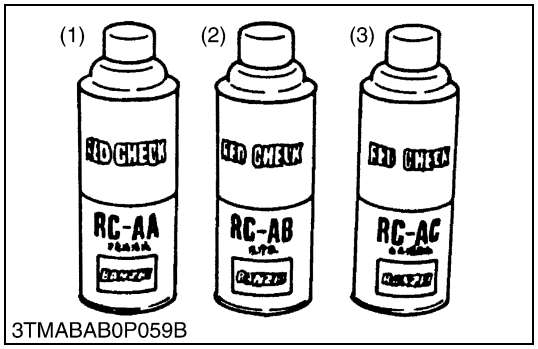

3TMABAB0P059B

Cylinder Head Flaw

1. Prepare an air spray red check (Code No. 07909-31371).
2. Clean the surface of the cylinder head with detergent (2).
3. Spray the cylinder head surface with the red permeative liquid (1). Leave it five to ten minutes after spraying.
4. Wash away the red permeative liquid on the cylinder head surface with the detergent (2).
5. Spray the cylinder head surface with white developer (3).
6. If flawed, it can be identified as red marks.

(1) Red Permeative Liquid
(2) Detergent
(3) White Developer

W1076542

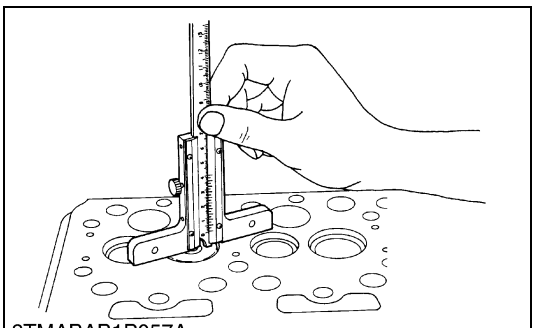
3TMABAB1P057A

Valve Recessing

1. Clean the cylinder head surface, valve face and valve seat.
2. Insert the valve into the valve guide.
3. Measure the valve recessing with a depth gauge.
4. If the measurement exceeds the allowable limit, replace the valve.
5. If it still exceeds the allowable limit after replacing the valve, correct the valve seat face of the cylinder head with a valve seat cutter or valve seat grinder.
6. Then, correct the cylinder head surface with a surface grinder, or replace the cylinder head.

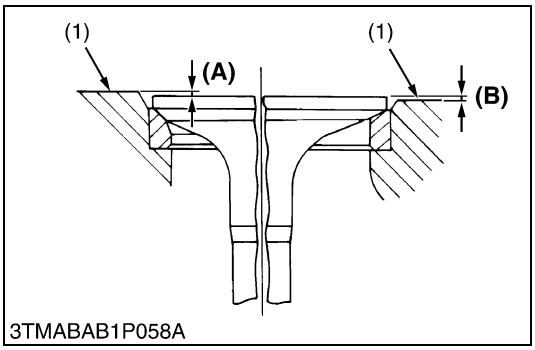

3TMABAB1P058A

Valve recessing	Factory spec.	0.05 (protrusion) to 0.15 (recessing) mm 0.0020 (protrusion) to 0.0059 (recessing) in.
	Allowable limit	0.40 (recessing) mm 0.0157 (recessing) in.

(1) Cylinder Head Surface
(A) Recessing
(B) Protrusion

W10768800

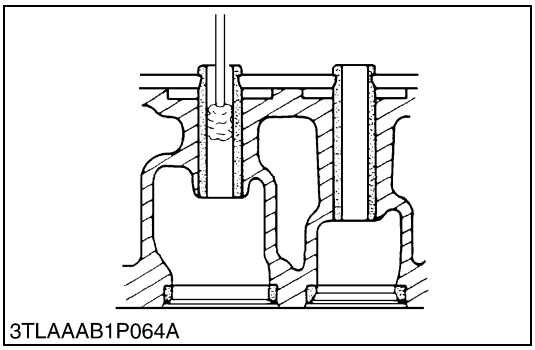
3TLAAAB1P064A

Cleaning Valve Guide

1. Wash and clean the inner surface of the valve guide with suitable cleaning fluid or diesel fuel.

W1086976

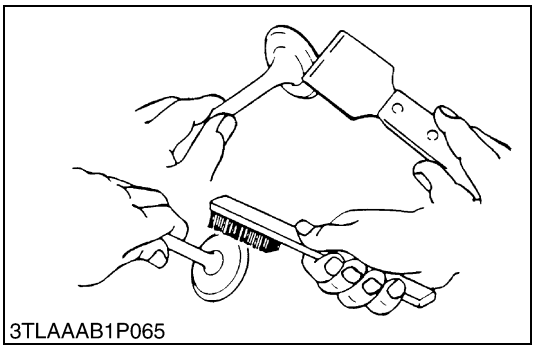
3TLAAAB1P065

Cleaning Valve

1. Use a scraper and remove carbon.
2. Use a wire brush and remove carbon completely.

W1105103

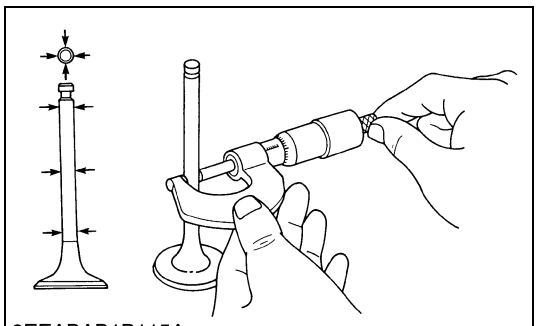
3EEABAB1P115A

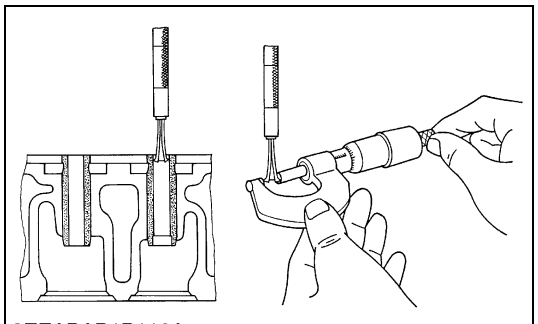
3EEABAB1P116A

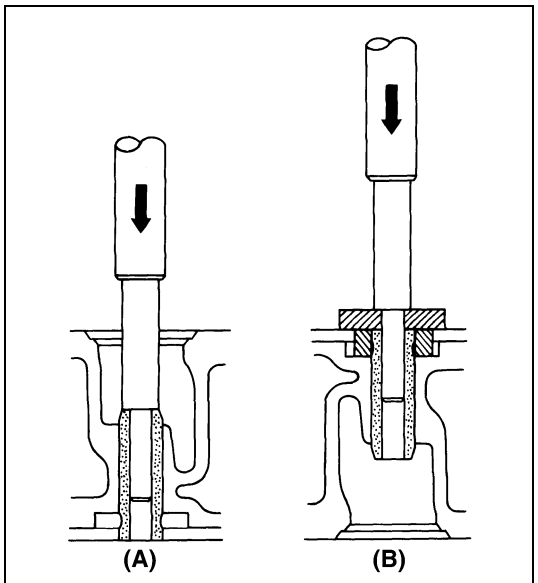

3EEABAB1P117A

Clearance between Valve Stem and Valve Guide

1. Remove carbon from the valve guide section.
2. Measure the valve stem O.D. with an outside micrometer.
3. Measure the valve guide I.D. with a small hole gauge, and calculate the clearance.
4. If the clearance exceeds the allowable limit, replace the valves. If it still exceeds the allowable limit, replace the valve guide.

Clearance between valve stem and valve guide	Factory spec.	0.040 to 0.070 mm 0.00157 to 0.00276 in.
	Allowable limit	0.10 mm 0.0039 in.

Valve stem O.D.	Factory spec.	7.960 to 7.975 mm 0.31339 to 0.31398 in.
Valve guide I.D.	Factory spec.	8.015 to 8.030 mm 0.31555 to 0.31614 in.

W10311740

Replacing Valve Guide

(When removing)

1. Press out the used valve guide using a valve guide replacing tool.

(When installing)

1. Clean a new valve guide and valve guide bore, and apply engine oil to them.
2. Press in a new valve guide using a valve guide replacing tool.
3. Ream precisely the I.D. of the valve guide to the specified dimension.

Valve guide I.D. (Intake and exhaust)	Factory spec.	8.015 to 8.030 mm 0.31555 to 0.31614 in.

■ **IMPORTANT**

- **Do not hit the valve guide with a hammer during replacement.**

(A) When Removing **(B) When Installing**

W10314690

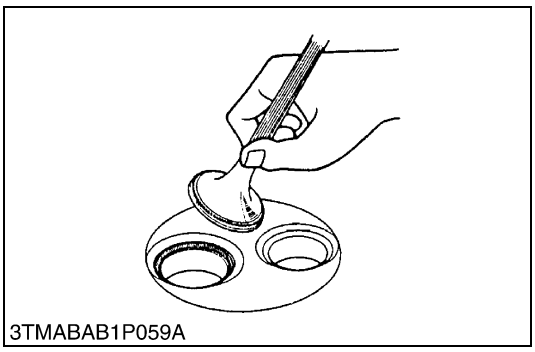
3TMABAB1P059A

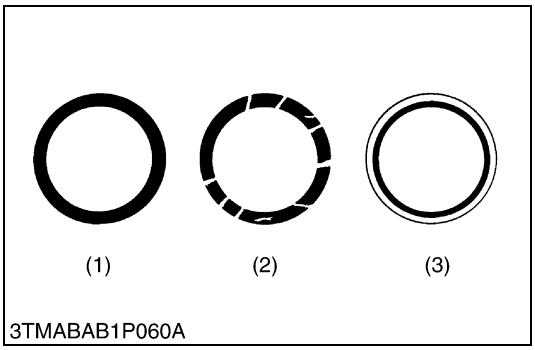

3TMABAB1P060A

Valve Seating

1. Coat the valve face lightly with prussian blue and put the valve on its seat to check the contact.
2. If the valve does not seat all the way around the valve seat or the valve contact is less than 70 %, correct the valve seating as follows.
3. If the valve contact does not comply with the reference value, replace the valve or correct the contact of valve seating.

Valve seat width	Factory spec.	2.12 mm 0.0835 in.

(1) Correct
(2) Incorrect
(3) Incorrect

W10282190

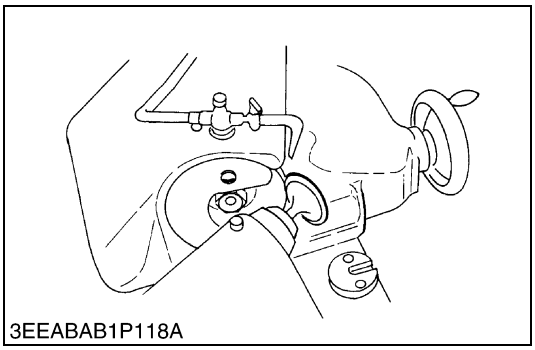
3EEABAB1P118A

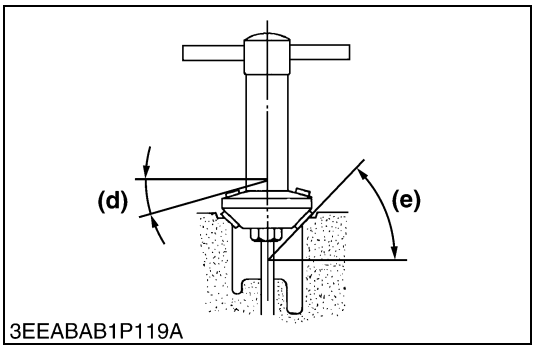

3EEABAB1P119A

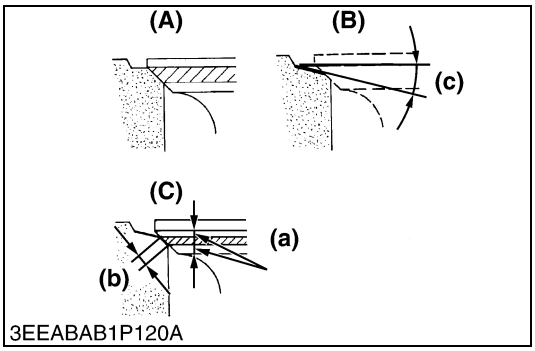

3EEABAB1P120A

Correcting Valve and Valve Seat

■ **NOTE**

- **Before correcting the valve and seat, check the valve stem and the I.D. of valve guide section, and repair them if necessary.**
- **After correcting the valve seat, be sure to check the valve recessing.**

1) Correcting Valve

1. Correct the valve with a valve refacer.

2) Correcting Valve Seat

1. Slightly correct the seat surface with a 1.047 rad (60 °) (intake valve) or 0.785 rad (45 °) (exhaust valve) seat cutter (Code No. 07909-33102).
2. Resurface the seat surface with a 0.523 rad (30 °) valve seat cutter to intake valve seat and with a 0.262 rad (15 °) valve seat cutter to exhaust valve seat so that the width is close to specified valve seat width (2.12 mm 0.0835 in.).
3. After resurfacing the seat, inspect for even valve seating, apply a thin film of compound between the valve face and valve seat, and fit them with valve lapping tool.
4. Check the valve seating with prussian blue. The valve seating surface should show good contact all the way around.

(a) Identical Dimensions
(b) Valve Seat Width
(c) 0.523 rad (30 °) or 0.262 rad (15 °)
(d) 0.262 rad (15 °) or 0.523 rad (30 °)
(e) 0.785 rad (45 °) or 1.047 rad (60 °)

A : Check Contact
B : Correct Seat Width
C : Check Contact

W10283500

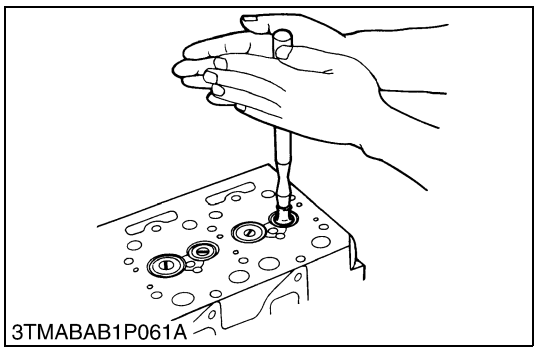
3TMABAB1P061A

Valve Lapping

1. Apply compound evenly to the valve lapping surface.
2. Insert the valve into the valve guide. Lap the valve onto its seat with a valve flapper or screwdriver.
3. After lapping the valve, wash the compound away and apply oil, then repeat valve lapping with oil.
4. Apply prussian blue to the contact surface to check the seated rate. If it is less than 70 %, repeat valve lapping again.

■ **IMPORTANT**

- **When valve lapping is performed, be sure to check the valve recessing and adjust the valve clearance after assembling the valve.**

W10288140

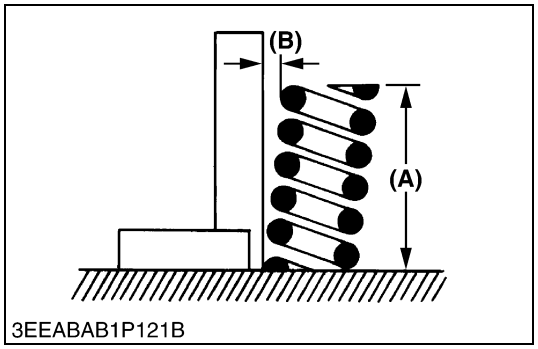

3EEABAB1P121B

Free Length and Tilt of Valve Spring

1. Measure the free length **(A)** of valve spring with vernier calipers. If the measurement is less than the allowable limit, replace it.
2. Put the valve spring on a surface plate, place a square on the side of the valve spring.
3. Check to see if the entire side is in contact with the square. Rotate the valve spring and measure the maximum tilt **(B)**. If the measurement exceeds the allowable limit, replace it.
4. Check the entire surface of the valve spring for scratches. If there is any defect, replace it.

Free length **(A)**	Factory spec.	41.7 to 42.2 mm 1.6417 to 1.6614 in.
	Allowable limit	41.2 mm 1.6220 in.

Tilt **(B)**	Allowable limit	1.0 mm 0.039 in.

(A) Free Length **(B) Tilt**

W11157830

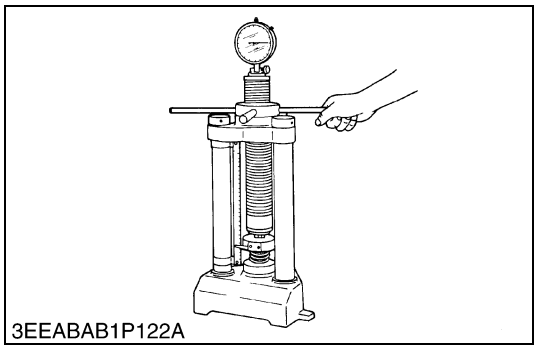
3EEABAB1P122A

Valve Spring Setting Load

1. Place the valve spring on a tester and compress it to the same length it is actually compressed in the engine.
2. Read the compression load on the gauge.
3. If the measurement is less than the allowable limit, replace it.

Setting load / Setting length	Factory spec.	117.6 N / 35.0 mm 12.0 kgf / 35.0 mm 26.4 lbs / 1.3780 in.
	Allowable limit	100 N / 35.0 mm 10.2 kgf / 35.0 mm 22.5 lbs / 1.3780 in.

W11177330

https://truckmanualshub.com/

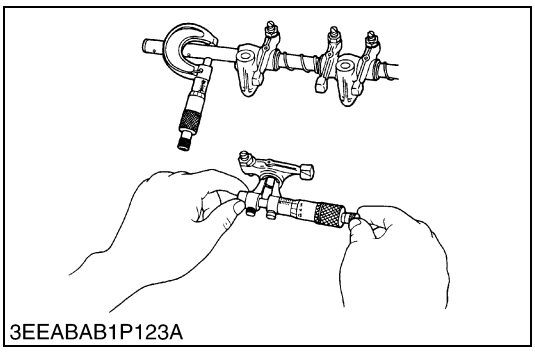
3EEABAB1P123A

Oil Clearance between Rocker Arm and Rocker Arm Shaft

1. Measure the rocker arm shaft O.D. with an outside micrometer.
2. Measure the rocker arm I.D. with an inside micrometer, and then calculate the oil clearance.
3. If the oil clearance exceeds the allowable limit, replace the rocker arm and measure the oil clearance again. If it still exceeds the allowable limit, replace also the rocker arm shaft.

Oil clearance between rocker arm and rocker arm shaft	Factory spec.	0.016 to 0.045 mm 0.00063 to 0.00177 in.
	Allowable limit	0.10 mm 0.0039 in.

Rocker arm shaft O.D.	Factory spec.	13.973 to 13.984 mm 0.55012 to 0.55055 in.
Rocker arm I.D.	Factory spec.	14.000 to 14.018 mm 0.55118 to 0.55189 in.

W11199710

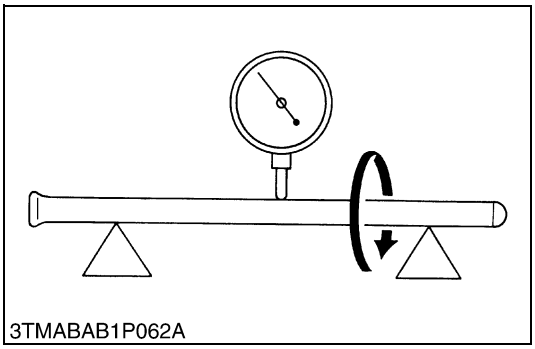
3TMABAB1P062A

Push Rod Alignment

1. Place the push rod on V blocks.
2. Measure the push rod alignment.
3. If the measurement exceeds the allowable limit, replace the push rod.

Push rod alignment	Allowable limit	0.25 mm 0.0098 in.

W11220210

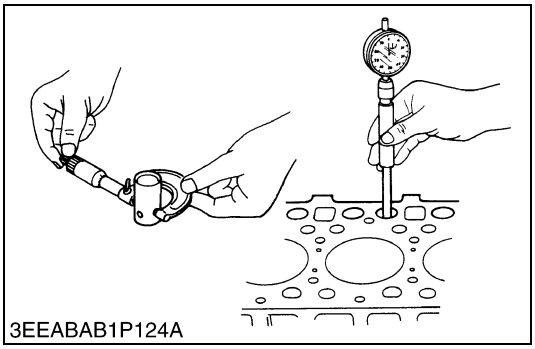
3EEABAB1P124A

Oil Clearance between Tappet and Tappet Guide Bore

1. Measure the tappet O.D. with an outside micrometer.
2. Measure the I.D. of the tappet guide bore with a cylinder gauge, and calculate the oil clearance.
3. If the oil clearance exceeds the allowable limit or the tappet is damaged, replace the tappet.

Oil clearance between tappet and tappet guide bore	Factory spec.	0.020 to 0.062 mm 0.00079 to 0.00244 in.
	Allowable limit	0.07 mm 0.0028 in.

Tappet O.D.	Factory spec.	23.959 to 23.980 mm 0.94327 to 0.94410 in.
Tappet guide bore I.D.	Factory spec.	24.000 to 24.021 mm 0.94488 to 0.94571 in.

W11231410

(2) Timing Gears, Camshaft and Fuel Camshaft

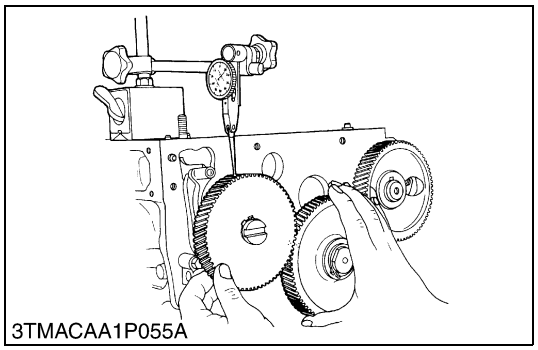
3TMACAA1P055A

Timing Gear Backlash

1. Set a dial indicator (lever type) with its tip on the gear tooth.
2. Move the gear to measure the backlash, holding its mating gear.
3. If the backlash exceeds the allowable limit, check the oil clearance of the shaft and the gear.
4. If the oil clearance is not correct, replace the gear.

Backlash between idle gear and crank gear	Factory spec.	0.0415 to 0.1122 mm 0.00163 to 0.00442 in.
	Allowable limit	0.15 mm 0.0059 in.

Backlash between idle gear and cam gear	Factory spec.	0.0415 to 0.1154 mm 0.00163 to 0.00454 in.
	Allowable limit	0.15 mm 0.0059 in.

Backlash between idle gear and injection pump gear	Factory spec.	0.0415 to 0.1154 mm 0.00163 to 0.00454 in.
	Allowable limit	0.15 mm 0.0059 in.

Backlash between crank gear oil pump gear	Factory spec.	0.0415 to 0.1090 mm 0.00163 to 0.00429 in.
	Allowable limit	0.15 mm 0.0059 in.

W11264830

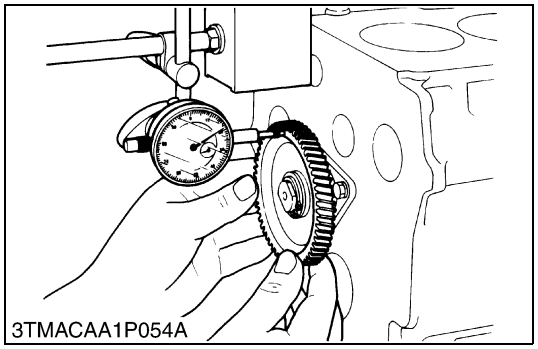
3TMACAA1P054A

Idle Gear Side Clearance

1. Set a dial indicator with its tip on the idle gear.
2. Measure the side clearance by moving the idle gear to the front and rear.
3. If the measurement exceeds the allowable limit, replace the idle gear collar.

Idle gear side clearance	Factory spec.	0.12 to 0.48 mm 0.0047 to 0.0189 in.
	Allowable limit	0.90 mm 0.0354 in.

W11286770

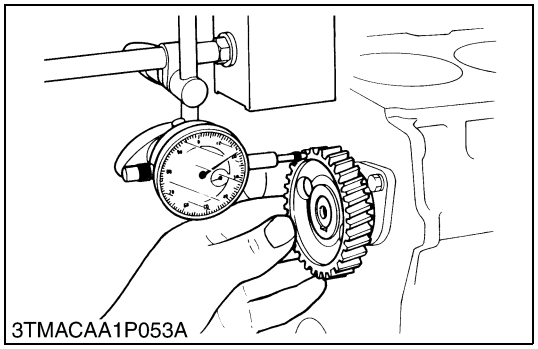
3TMACAA1P053A

Camshaft Side Clearance

1. Set a dial indicator with its tip on the cam gear.
2. Measure the side clearance by moving the cam gear to the font and rear.
3. If the measurement exceeds the allowable limit, replace the camshaft stopper.

Camshaft side clearance	Factory spec.	0.07 to 0.22 mm 0.0028 to 0.0087 in.
	Allowable limit	0.30 mm 0.0118 in.

W11299720

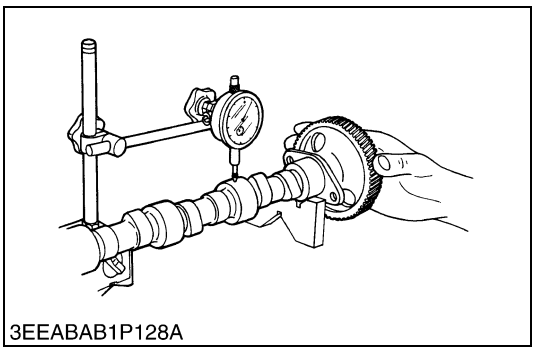
3EEABAB1P128A

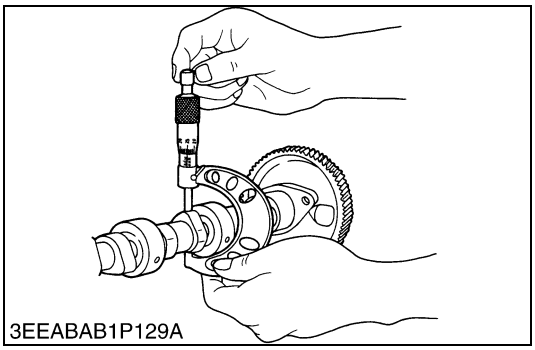
3EEABAB1P129A

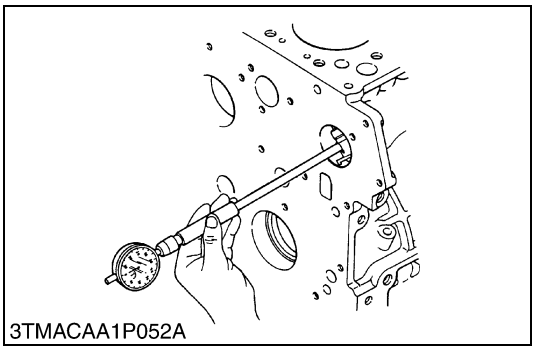
3TMACAA1P052A

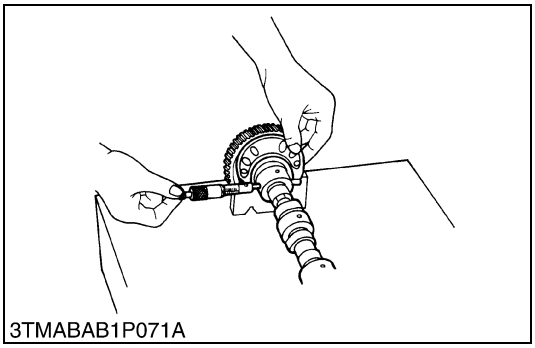
3TMABAB1P071A

Camshaft Alignment

1. Support the camshaft with V blocks on the surface plate at both end journals.
2. Set a dial indicator with its tip on the intermediate journal.
3. Measure the camshaft alignment.
4. If the measurement exceeds the allowable limit, replace the camshaft.

Camshaft alignment	Allowable limit	0.01 mm 0.0004 in.

W11312720

Cam Height

1. Measure the height of the cam at its highest point with an outside micrometer.
2. If the measurement is less than the allowable limit, replace the camshaft.

Cam height of intake and exhaust	Factory spec.	33.90 mm 1.3346 in.
	Allowable limit	33.85 mm 1.3327 in.

W11324040

Oil Clearance of Camshaft Journal

1. Measure the camshaft journal O.D. with an outside micrometer.
2. Measure the cylinder block bore I.D. for camshaft with a cylinder gauge, and calculate the oil clearance.
3. If the oil clearance exceeds the allowable limit, replace the camshaft.

Oil clearance of camshaft journal	Factory spec.	0.050 to 0.091 mm 0.00197 to 0.00358 in.
	Allowable limit	0.15 mm 0.0059 in.

Camshaft journal O.D.	Factory spec.	39.934 to 39.950 mm 1.57221 to 1.57284 in.
Camshaft Bearing I.D.	Factory spec.	40.000 to 40.025 mm 1.57480 to 1.57579 in.

W11335580

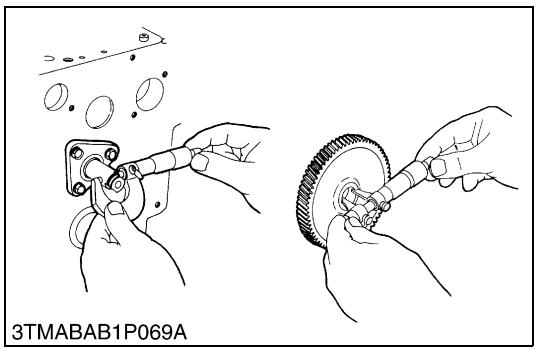
3TMABAB1P069A

Oil Clearance between Idle Gear Shaft and Idle Gear Bushing

1. Measure the idle gear shaft O.D. with an outside micrometer.
2. Measure the idle gear bushing I.D. with an inside micrometer, and calculate the oil clearance.
3. If the oil clearance exceeds the allowable limit, replace the bushing.
4. If it still exceeds the allowable limit, replace the idle gear shaft.

Oil clearance between idle gear shaft and idle gear bushing	Factory spec.	0.025 to 0.066 mm 0.00098 to 0.00260 in.
	Allowable limit	0.10 mm 0.0039 in.

Idle gear shaft O.D.	Factory spec.	37.959 to 37.975 mm 1.49445 to 1.49508 in.
Idle gear bushing I.D.	Factory spec.	38.000 to 38.025 mm 1.49606 to 1.49705 in.

W11356150

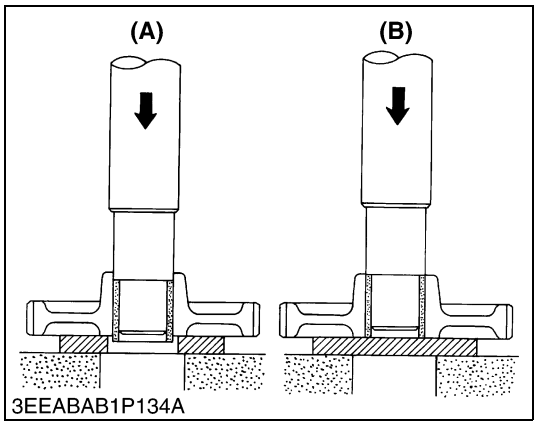

3EEABAB1P134A

Replacing Idle Gear Bushing

(When removing)

1. Press out the used idle gear bushing using an idle gear bushing replacing tool.

(When installing)

1. Clean a new idle gear bushing and idle gear bore, and apply engine oil to them.
2. Press in a new bushing using an idle gear bushing replacing tool, until it is flush with the end of the idle gear.

(A) When Removing **(B) When Installing**

W11373220

(3) Piston and Connecting Rod

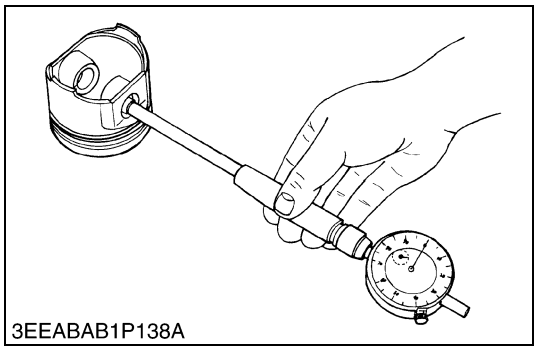
3EEABAB1P138A

Piston Pin Bore I.D.

1. Measure the piston pin bore I.D. in both the horizontal and vertical directions with a cylinder gauge.
2. If the measurement exceeds the allowable limit, replace the piston.

Piston pin bore I.D.	Factory spec.	25.000 to 25.013 mm 0.98425 to 0.98476 in.
	Allowable limit	25.05 mm 0.9862 in.

W11406200

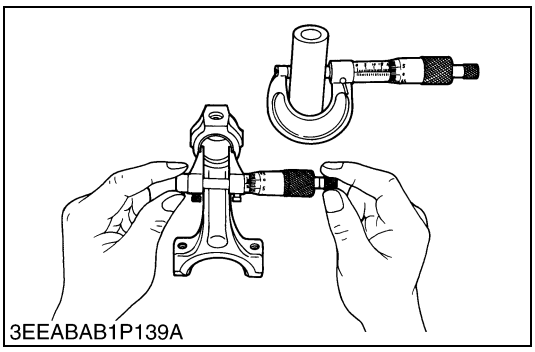
3EEABAB1P139A

Oil Clearance between Piston Pin and Small End Bushing

1. Measure the piston pin O.D. where it contacts the bushing with an outside micrometer.
2. Measure the small end bushing I.D. with an inside micrometer, and calculate the oil clearance.
3. If the oil clearance exceeds the allowable limit, replace the bushing. If it still exceeds the allowable limit, replace the piston pin.

Oil clearance between piston pin and small end bushing	Factory spec.	0.014 to 0.038 mm 0.00055 to 0.00150 in.
	Allowable limit	0.15 mm 0.0059 in.

Piston pin O.D.	Factory spec.	25.002 to 25.011 mm 0.98433 to 0.98469 in.
Small end bushing I.D.	Factory spec.	25.025 to 25.040 mm 0.98524 to 0.98583 in.

W11420110

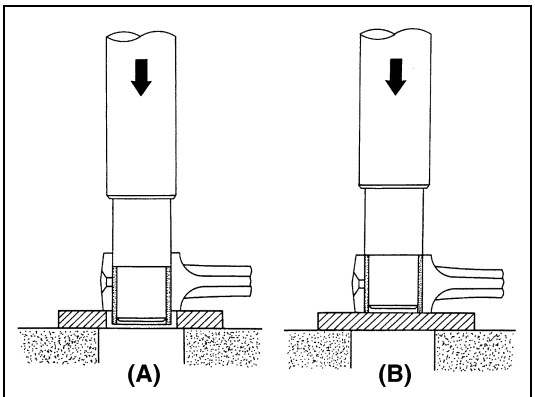

3EEABAB1P140A

Replacing Connecting Rod Small End Bushing

(When removing)

1. Press out the small end bushing with a connecting rod small end bushing replacing tool.

(When installing)

1. Clean a new small end bushing and bore, and apply engine oil to them.
2. Press fit a new bushing, taking due care to see that the connecting rod hole matches the bushing hole.

(A) When removing **(B) When installing**

W11437590

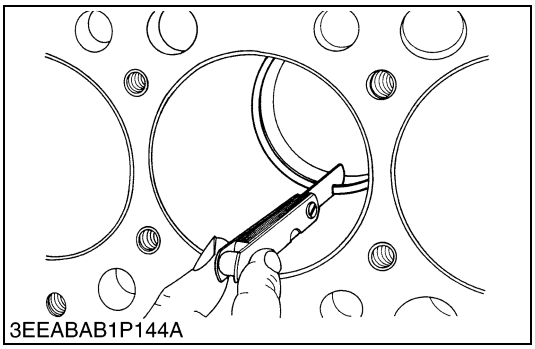
3EEABAB1P144A

Piston Ring Gap

1. Insert the piston ring into the lower part of the liner (the least worn out part) with the piston.
2. Measure the ring gap with a feeler gauge.
3. If the gap exceeds the allowable limit, replace the ring.

Piston ring gap	Top ring	Factory spec.	0.25 to 0.40 mm 0.0098 to 0.0157 in.
		Allowable limit	1.25 mm 0.0492 in.
	Second ring	Factory spec.	0.30 to 0.45 mm 0.0118 to 0.0177 in.
		Allowable limit	1.25 mm 0.0492 in.
	Oil ring	Factory spec.	0.25 to 0.45 mm 0.0098 to 0.0177 in.
		Allowable limit	1.25 mm 0.0492 in.

W11466710

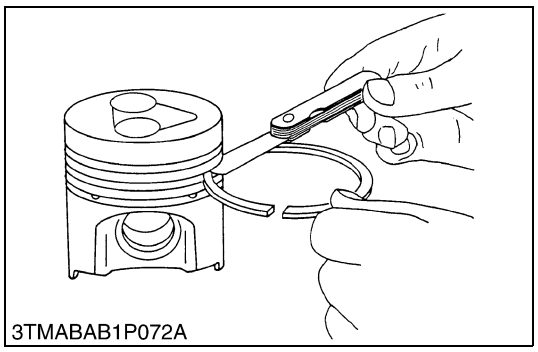
3TMABAB1P072A

Clearance between Piston Ring and Groove

1. Remove carbon from the ring grooves.
2. Measure the clearance between the ring and the groove with a feeler gauge or depth gauge.
3. If the clearance exceeds the allowable limit, replace the ring as compression leakage and oil loss or burning will result.
4. If the clearance still exceeds the allowable limit after replacing the ring, replace the piston.

Clearance between piston ring and piston ring groove	Second ring	Factory spec.	0.093 to 0.128 mm 0.0037 to 0.0050 in.
		Allowable limit	0.20 mm 0.0079 in.
	Oil ring	Factory spec.	0.020 to 0.060 mm 0.0008 to 0.0021 in.
		Allowable limit	0.15 mm 0.0059 in.

W11485500

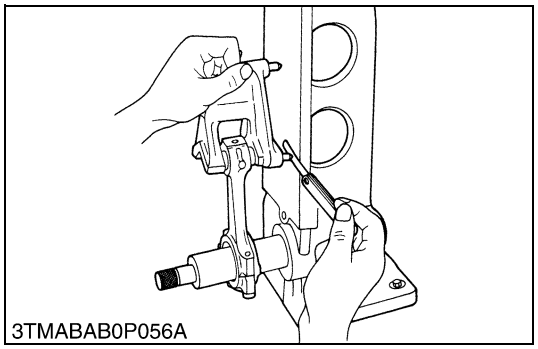
3TMABAB0P056A

Connecting Rod Alignment

■ **NOTE**

- **Since the I.D. of the connecting rod small end bushing is the basis of this check, check bushing for wear beforehand.**

1. Install the piston pin into the connecting rod.
2. Install the connecting rod on the connecting rod alignment tool.
3. Put a gauge over the piston pin, and move it against the face plate.
4. If the gauge does not fit squarely against the face plate, measure the space between the pin of the gauge and the face plate.
5. If the measurement exceeds the allowable limit, replace the connecting rod.

Connecting rod alignment	Allowable limit	0.05 mm 0.0020 in.

W10314620

(4) Crankshaft

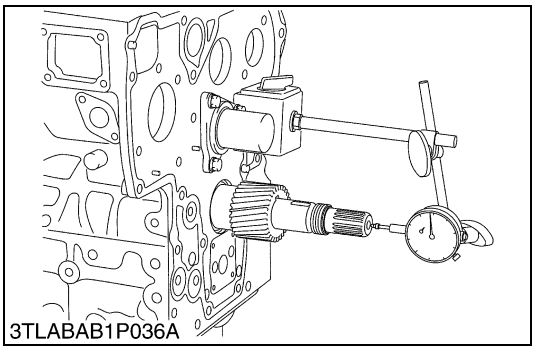
3TLABAB1P036A

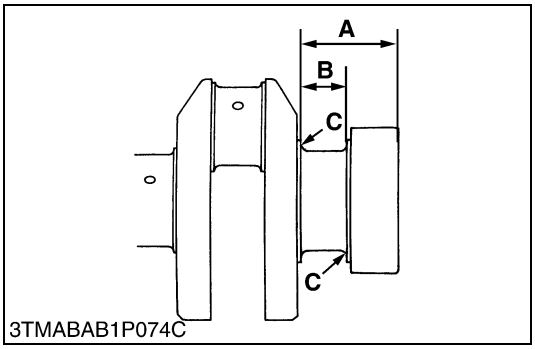

3TMABAB1P074C

Side Clearance of Crankshaft

1. Set a dial indicator with its tip on the end of the crankshaft.
2. Measure the side clearance by moving the crankshaft to the front and rear.
3. If the measurement exceeds the allowable limit, replace the thrust bearings.
4. If the same size bearing is ineffective because of the crankshaft journal wear, replace it with an oversize one referring to the table and figure.

Crankshaft side clearance	Factory spec.	0.15 to 0.31 mm 0.0059 to 0.0122 in.
	Allowable limit	0.5 mm 0.0197 in.

(Reference)

- Oversize dimensions of crankshaft journal

Oversize	0.2 mm 0.008 in.	0.4 mm 0.016 in.
Dimension **A**	54.5 to 54.7 mm 2.1457 to 2.1535 in.	54.6 to 54.8 mm 2.1496 to 2.1575 in.
Dimension **B**	26.20 to 26.25 mm 1.0315 to 1.0335 in.	26.40 to 26.45 mm 1.0394 to 1.0413 in.
Dimension **C**	2.8 to 3.2 mm radius 0.1102 to 0.1260 in. radius	2.8 to 3.2 mm radius 0.1102 to 0.1260 in. radius
The crankshaft journal must be fine-finished to higher than ∇∇∇∇ (0.4S)		

W1032880

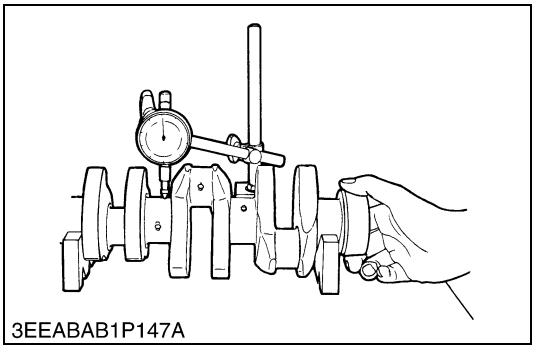
3EEABAB1P147A

Crankshaft Alignment

1. Support the crankshaft with V blocks on the surface plate at both end journals.
2. Set a dial indicator with its tip on the intermediate journal.
3. Measure the crankshaft alignment.
4. If the measurement exceeds the allowable limit, replace the crankshaft.

Crankshaft alignment	Allowable limit	0.02 mm 0.00079 in.

W1033001

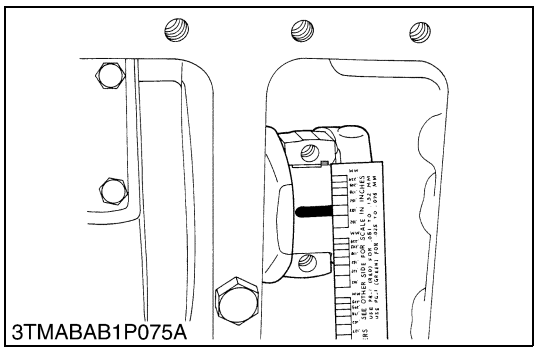
3TMABAB1P075A

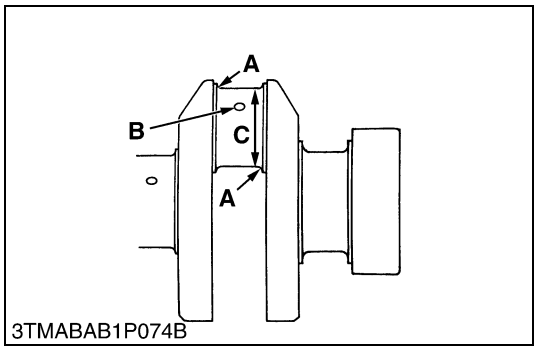

3TMABAB1P074B

Oil Clearance between Crankpin and Crankpin Bearing

1. Clean the crankpin and crankpin bearing.
2. Put a strip of plastigage on the center of the crankpin.
3. Install the connecting rod cap and tighten the connecting rod screws to the specified torque, and remove the cap again.
4. Measure the amount of the flattening with the scale, and get the oil clearance.
5. If the oil clearance exceeds the allowable limit, replace the crankpin bearing.
6. If the same size bearing is ineffective because of the crankpin wear, replace it with an undersize one referring to the table and figure.

■ **NOTE**

- **Never insert the plastigage into the crankpin oil hole.**
- **Be sure not to move the crankshaft while the connecting rod screws are tightened.**

Oil clearance between crankpin and crankpin bearing	Factory spec.	0.025 to 0.087 mm 0.00098 to 0.00343 in.
	Allowable limit	0.20 mm 0.0079 in.

Crankpin O.D.	Factory spec.	46.959 to 46.975 mm 1.84878 to 1.84941 in.
Crankpin bearing I.D.	Factory spec.	47.000 to 47.046 mm 1.85039 to 1.85221 in.

(Reference)

- Undersize dimensions of crankpin

Undersize	0.2 mm 0.008 in.	0.4 mm 0.016 in.
Dimension **A**	3.3 to 3.7 mm radius 0.1299 to 0.1457 in. radius	3.3 to 3.7 mm radius 0.1299 to 0.1457 in. radius
*Dimension **B**	1.0 to 1.5 mm relief 0.0394 to 0.0591 in. relief	1.0 to 1.5 mm relief 0.0394 to 0.0591 in. relief
Dimension **C**	46.759 to 46.775 mm dia. 1.84091 to 1.84154 in. dia.	46.559 to 46.575 mm dia. 1.83303 to 1.83366 in. dia.
The crankpin must be fine-finished to higher than ∇∇∇∇ (0.4S) *Holes to be de-burred and edges rounded with 1.0 to 1.5 mm (0.0394 to 0.0591 in.) relief.		

W1033106

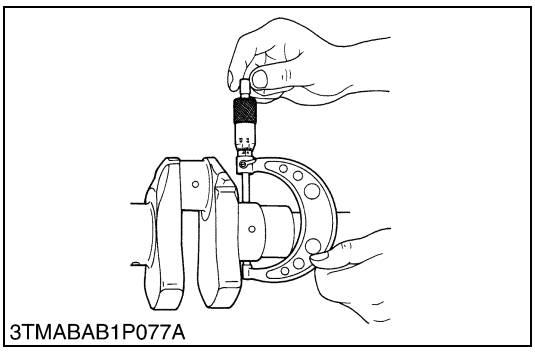
3TMABAB1P077A

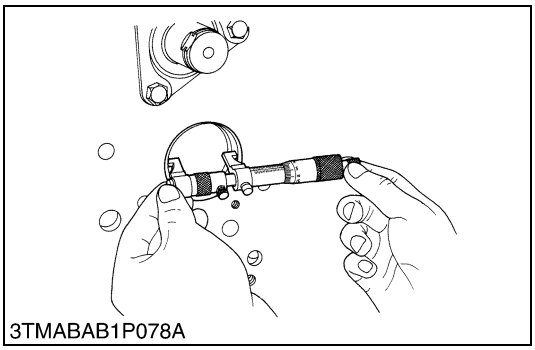
3TMABAB1P078A

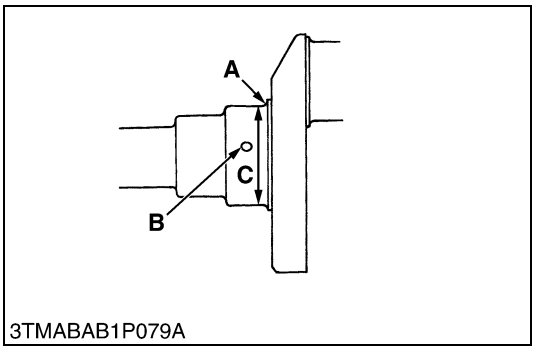

3TMABAB1P079A

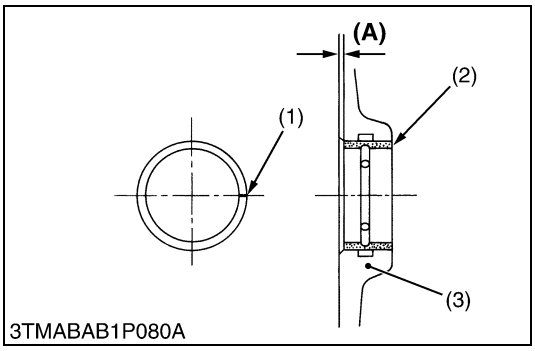

3TMABAB1P080A

Oil Clearance between Crankshaft Journal and Crankshaft Bearing 1

1. Measure the O.D. of the crankshaft journal with an outside micrometer.
2. Measure the I.D. of the crankshaft bearing 1 with an inside micrometer, and calculate oil clearance.
3. If the clearance exceeds the allowable limit, replace the crankshaft bearing 1.
4. If the same size bearing is ineffective because of the crankshaft journal wear, replace it with an undersize one referring to the table and figure.

Oil clearance between crankshaft journal and crankshaft bearing 1	Factory spec.	0.040 to 0.118 mm 0.00157 to 0.00465 in.
	Allowable limit	0.2 mm 0.0079 in.

Crankshaft journal O.D.	Factory spec.	59.921 to 59.940 mm 2.35910 to 2.35984 in.
Crankshaft bearing 1 I.D.	Factory spec.	59.980 to 60.039 mm 2.36142 to 2.36374 in.

(Reference)

- Undersize dimensions of crankshaft journal

Undersize	0.2 mm 0.008 in.	0.4 mm 0.016 in.
Dimension **A**	2.8 to 3.2 mm radius 0.1102 to 0.1260 in. radius	2.8 to 3.2 mm radius 0.1102 to 0.1260 in. radius
*Dimension **B**	1.0 to 1.5 mm relief 0.0394 to 0.0591 in. relief	1.0 to 1.5 mm relief 0.0394 to 0.0591 in. relief
Dimension **C**	59.721 to 59.740 mm dia. 2.35122 to 2.35197 in. dia.	59.521 to 59.540 mm dia. 2.34335 to 2.34410 in. dia.
The crankshaft journal must be fine-finished to higher than ∇∇∇∇ (0.4S) *Holes to be de-burred and edges rounded with 1.0 to 1.5 mm (0.0394 to 0.0591 in.) relief.		

W1033717

Replacing Crankshaft Bearing 1

(When removing)

1. Press out the used crankshaft bearing 1 using a crankshaft bearing 1 replacing tool.

(When installing)

1. Clean a new crankshaft bearing 1 and crankshaft journal bore, and apply engine oil to them.
2. Using a crankshaft bearing 1 replacing tool, press in a new bearing 1 (2) so that its seam (1) directs toward the exhaust manifold side.

Dimension (**A**)	Factory spec.	4.2 to 4.5 mm 0.1654 to 0.1772 in.

(1) Seam
(2) Crankshaft Bearing 1
(3) Cylinder Block

(A) Dimension

W10342000

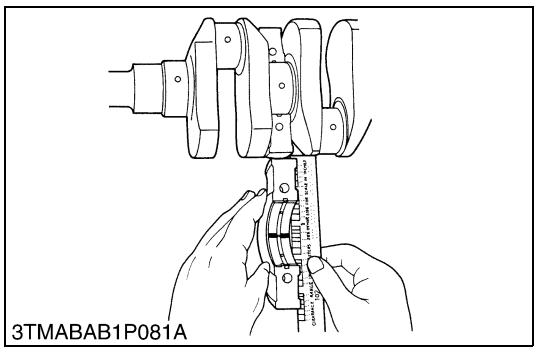
3TMABAB1P081A

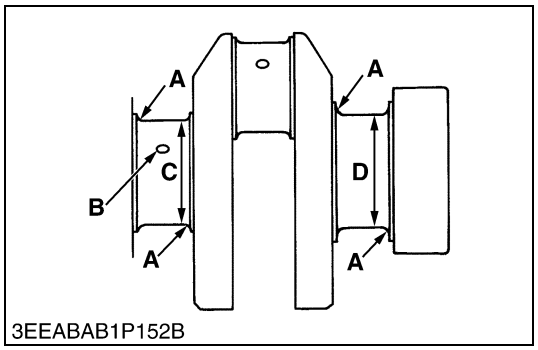

3EEABAB1P152B

Oil Clearance between Crankshaft Journal and Crankshaft Bearing 2

1. Put a strip of plastigage on the center of the journal.
2. Install the bearing case and tighten the bearing case screws 1 to the specified torque, and remove the bearing case again.
3. Measure the amount of the flattening with the scale and get the oil clearance.
4. If the clearance exceeds the allowable limit, replace the crankshaft bearing 2.
5. If the same size bearing is ineffective because of the crankshaft journal wear, replace it with an undersize one referring to the table and figure.

■ **NOTE**

- **Be sure not to move the crankshaft while the bearing case screws are tightened.**

Oil clearance between crankshaft and crankshaft bearing 2	Factory spec.	0.040 to 0.104 mm 0.00157 to 0.00409 in.
	Allowable limit	0.20 mm 0.0079 in.

Crankshaft journal O.D.	Factory spec.	59.921 to 59.940 mm 2.35910 to 2.35984 in.
Crankshaft bearing 2 I.D.	Factory spec.	59.980 to 60.025 mm 2.36142 to 2.36319 in.

(Reference)

- Undersize dimensions of crankshaft journal

Undersize	0.2 mm 0.008 in.	0.4 mm 0.016 in.
Dimension **A**	2.8 to 3.2 mm radius 0.1102 to 0.1260 in. radius	2.8 to 3.2 mm radius 0.1102 to 0.1260 in. radius
*Dimension **B**	1.0 to 1.5 mm relief 0.0394 to 0.0591 in. relief	1.0 to 1.5 mm relief 0.0394 to 0.0591 in. relief
Dimension **C, D**	59.721 to 59.740 mm dia. 2.35122 to 2.35197 in. dia.	59.521 to 59.540 mm dia. 2.34335 to 2.34410 in. dia.
The crankshaft journal must be fine-finished to higher than ∇∇∇∇ (0.4S) *Holes to be de-burred and edges rounded with 1.0 to 1.5 mm (0.0394 to 0.0591 in.) relief.		

W1083821

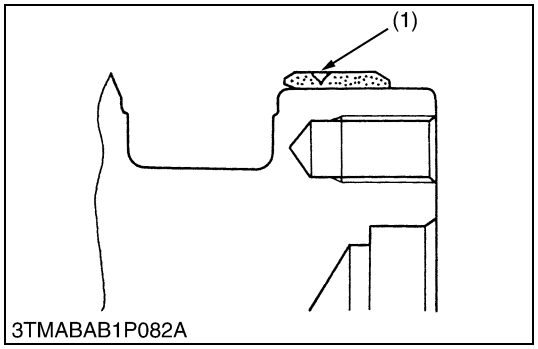

3TMABAB1P082A

Crankshaft Sleeve Wear

1. Check the wear on the crankshaft sleeve (1).
2. If the wear exceeds the allowable limit or when the engine oil leaks, replace the crankshaft sleeve.

Wear of sleeve	Allowable limit	0.1 mm 0.0039 in.

(1) Crankshaft Sleeve

W1110651

https://truckmanualshub.com/

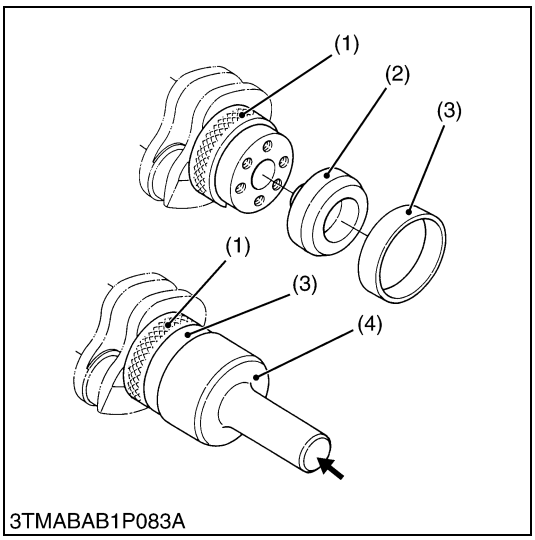

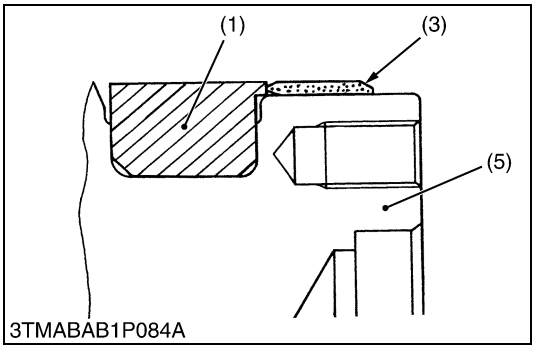

Replacing Crankshaft Sleeve

1. Remove the used crankshaft sleeve (3).
2. Set the sleeve guide (2) to the crankshaft (5).
3. Set the stopper (1) to the crankshaft (5) as shown in figure.
4. Heat a new sleeve to a temperature between 150 and 200 °C (302 and 392 °F), and fix the sleeve to the crankshaft (5) as shown in figure.
5. Press fit the sleeve using the auxiliary socket for pushing (4). (Refer to **"SPECIAL TOOLS"**.)

CAUTION

- **Extreme caution - HOT !**
- **Use of protective equipment during the replacement of this sleeve is recommended.**

■ **NOTE**

- **Mount the sleeve with its largely chamfered surface facing outward.**
- **Should heating is not enough, a sleeve might stop halfway, so careful.**

(1) Stopper
(2) Sleeve Guide
(3) Crankshaft Sleeve
(4) Auxiliary Socket for Pushing
(5) Crankshaft

W1033503

(5) Cylinder

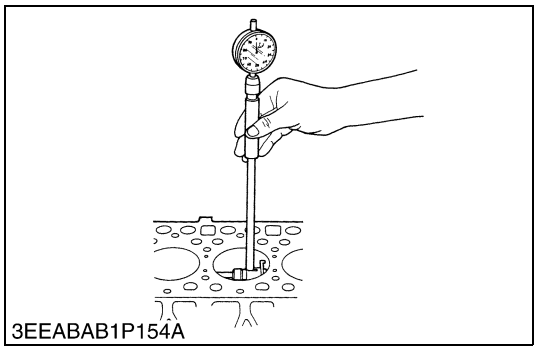
3EEABAB1P154A

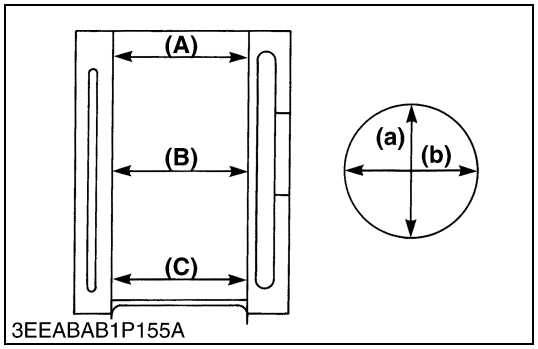

3EEABAB1P155A

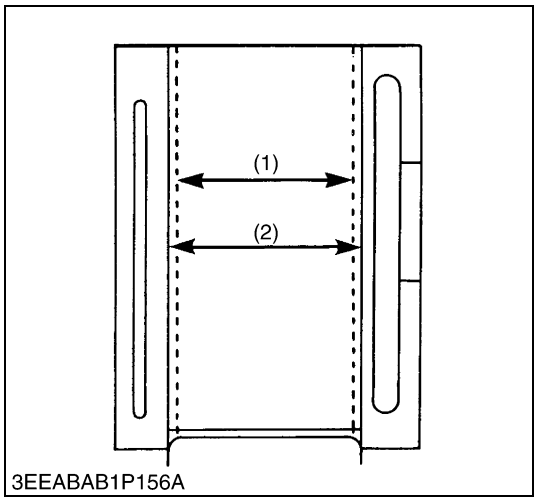

3EEABAB1P156A

Cylinder Wear

1. Measure the I.D. of the cylinder at the six positions (see figure) with a cylinder gauge to find the maximum and minimum I.D.'s.
2. Get the difference (Maximum wear) between the maximum and the minimum I.D.'s.
3. If the wear exceeds the allowable limit, bore and hone to the oversize dimension. (Refer to **"Correcting Cylinder".**)
4. Visually check the cylinder wall for scratches. If deep scratches are found, the cylinder should be bored. (Refer to **"Correcting Cylinder".**)

Cylinder liner I.D.	Factory spec.	87.000 to 87.022 mm 3.42520 to 3.42606 in.
Maximum wear	Allowable limit	87.150 mm 3.4311 in.

(A) Top
(B) Middle
(C) Bottom (Skirt)

(a) Right-angled to Piston Pin
(b) Piston Pin Direction

W10360060

Correcting Cylinder (Oversize)

1. When the cylinder is worn beyond the allowable limit, bore and hone it to the specified dimension.

Oversize cylinder I.D.	Factory spec.	87.250 to 87.272 mm 3.43504 to 3.43591 in.
	Allowable limit	87.400 mm 3.4409 in.
Finishing	Hone to 2.2 to 3.0 µm Rz. (0.000087 to 0.000118 in.Rz.) ∇∇∇	

2. Replace the piston and piston rings with oversize ones.

Parts Name	Code Number	Marking
Piston	1A091-21901	020 OS
Piston ring assembly	1A091-21091	0.25 OS

■ **NOTE**
- **When the oversize cylinder is worn beyond the allowable limit, replace the cylinder block with a new one.**

(1) Cylinder I.D. (Before Correction) (2) Cylinder I.D. (Oversize)

W10367470

(6) Oil Pump

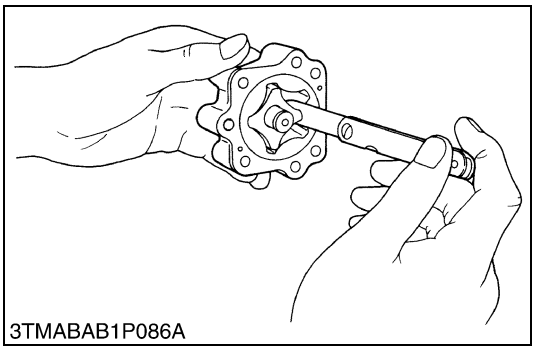
3TMABAB1P086A

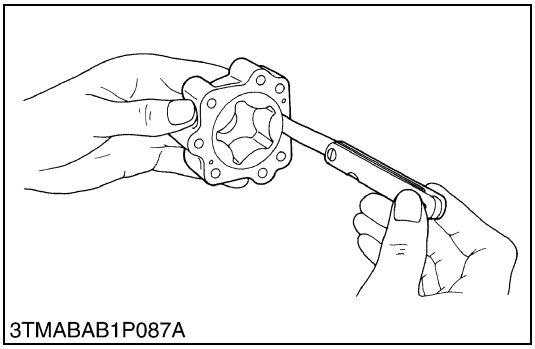
3TMABAB1P087A

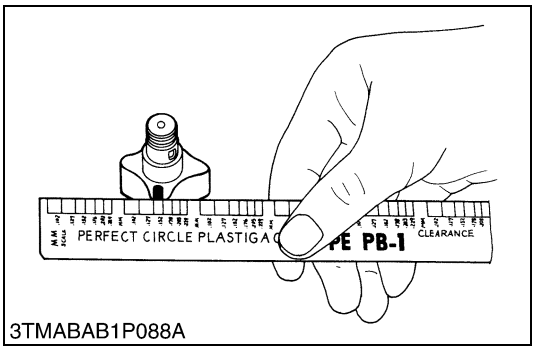

3TMABAB1P088A

Rotor Lobe Clearance

1. Measure the clearance between lobes of the inner rotor and the outer rotor with a feeler gauge.
2. Measure the clearance between the outer rotor and the pump body with a feeler gauge.
3. If the clearance exceeds the factory specifications, replace the oil pump rotor assembly.

Clearance between inner rotor and outer rotor	Factory spec.	0.03 to 0.14 mm 0.0012 to 0.0055 in.
	Allowable limit	0.2 mm 0.0079 in.

Clearance between outer rotor and pump body	Factory spec.	0.11 to 0.19 mm 0.0043 to 0.0075 in.
	Allowable limit	0.25 mm 0.0098 in.

W10378950

Clearance between Rotor and Cover

1. Put a strip of plastigage (Code No. 07909-30241) onto the rotor face with grease.
2. Install the cover and tighten the screws.
3. Remove the cover carefully, and measure the width of the press gauge with a sheet of gauge.
4. If the clearance exceeds the factory specifications, replace the oil pump rotor assembly.

End clearance between inner rotor and cover	Factory spec.	0.105 to 0.150 mm 0.00413 to 0.00591 in.
	Allowable limit	0.2 mm 0.0079 in.

W10382660

https://truckmanualshub.com/

2 CLUTCH

https://truckmanualshub.com/

MECHANISM

CONTENTS

1. STRUCTURE 2-M1

https://truckmanualshub.com/

1. STRUCTURE

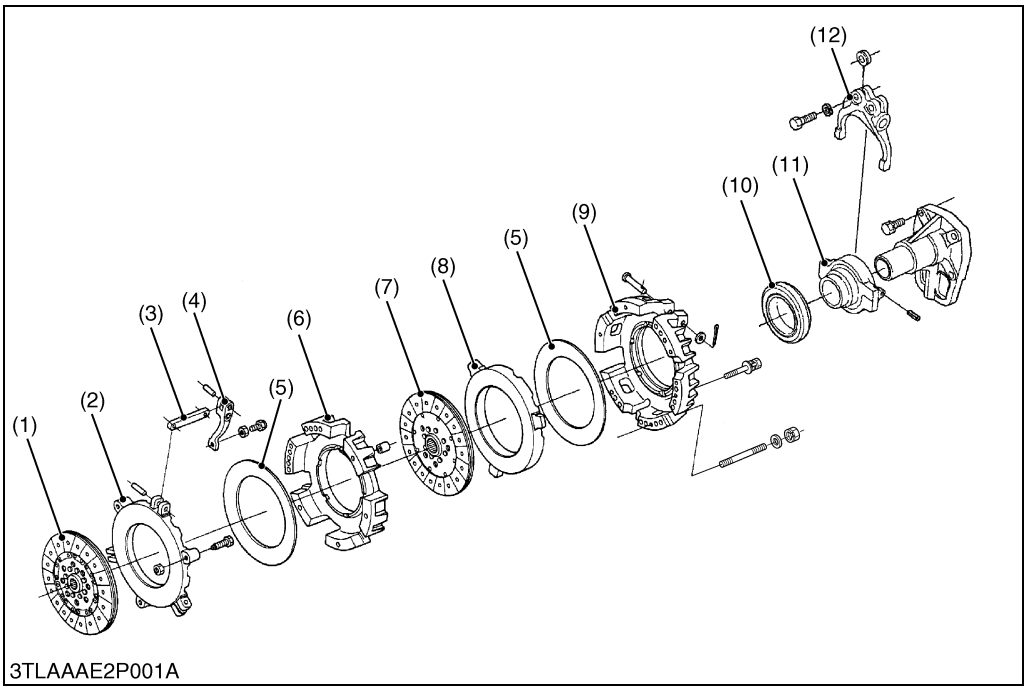

(1) Clutch Disc 1 (Traveling)
(2) Pressure Plate 1
(3) Release Rod
(4) Release Lever
(5) Belleville Spring
(6) Clutch Cover 1
(7) Clutch Disc 2 (PTO)
(8) Pressure Plate 2
(9) Clutch Cover 2
(10) Thrust Ball Bearing
(11) Release Hub
(12) Release Fork

W1012812

The clutch is located between the engine and transmission and is operated by stepping on the clutch pedal.

When the clutch pedal is depressed, the clutch is disengaged and when it is released, the clutch is engaged and power from the engine is transmitted to the transmission.

L3200 tractor, equipped with the dual stage type clutch, has a live PTO function which enables stoppage of the power transmission to the traveling system while the PTO is in rotation.

https://truckmanualshub.com/

SERVICING

CONTENTS

1. TROUBLESHOOTING 2-S1
2. SERVICING SPECIFICATIONS 2-S2
3. TIGHTENING TORQUES 2-S3
4. CHECKING, DISASSEMBLING AND SERVICING 2-S4
   [1] CHECKING AND ADJUSTING 2-S4
   [2] PREPARATION 2-S5
      (1) Separating Engine and Clutch Housing 2-S5
      (2) Separating Clutch Assembly 2-S10
   [3] DISASSEMBLING AND ASSEMBLING 2-S11
   [4] SERVICING 2-S12

https://truckmanualshub.com/

1. TROUBLESHOOTING

Symptom	Probable Cause	Solution	Reference Page
Clutch Drags	Clutch pedal free play excessive	Adjust	2-S4
	Clutch disc boss spline sticking or rusted	Replace or remove rust	2-S10
	Dust on clutch disc generated from clutch disc facing	Replace or remove rust	–
	Release fork broken	Replace	2-S10
	Grease or oil on clutch disc facing	Replace	2-S10
	Clutch disc or pressure plate warped	Replace	2-S10
	Pilot bearing sticking or worn	Replace	–
	Release lever improperly adjusted	Adjust	2-S4, S12
Clutch Slips	Clutch disc excessively worn	Replace	2-S13
	Grease or oil on clutch disc facing	Replace	2-S10
	Clutch disc or pressure plate warped	Replace	2-S10
	Diaphragm spring weaken or broken	Replace	2-S10
	Wire ring worn or broken (clutch cover side)	Replace (Pressure plate assembly)	2-S10
	Release lever improperly adjusted	Adjust	2-S4, S12
Chattering	Grease or oil on clutch disc facing	Replace	2-S10
	Clutch disc or pressure plate warped	Replace	2-S10
	Clutch disc boss spline worn or rusted	Replace or remove rust	2-S10
	Main shaft bent	Replace	3-S17
	Pressure plate or flywheel face cracked or scored	Replace	2-S10
	Clutch disc boss and main shaft spline worn	Replace	2-S10, 3-S17
	Belleville spring strength uneven or broken	Replace	2-S12
Rattle During Running	Clutch disc boss spline worn	Replace	2-S10
	Thrust ball bearing worn or sticking	Replace	2-S10
	Pilot bearing worn or sticking	Replace	–
Clutch Squeaks	Thrust ball bearing sticking or dry	Replace	2-S10
	Pilot bearing worn or sticking	Replace	–
	Clutch disc excessively worn	Replace	2-S13
Vibration	Main shaft bent	Replace	3-S17
	Clutch disc rivet worn or broken	Replace	2-S10
	Clutch parts broken	Replace	2-S10

W1014322

2. SERVICING SPECIFICATIONS

Item		Factory Specification	Allowable Limit
Clutch Pedal	Free Travel	20 to 30 mm 0.8 to 1.2 in.	–
Pressure Plate to Adjusting Bolt	Clearance	1.4 to 1.5 mm 0.055 to 0.059 in.	–
Clutch Disc Boss to Main Shaft (Traveling)	Backlash (Displacement around Disc Edge)	–	0.2 mm 0.079 in.
Clutch Disc Boss to Main Shaft (PTO)	Backlash (Displacement around Disc Edge)	–	0.2 mm 0.079 in.
Clutch Disc	Disc Surface to Rivet Top (Depth)	–	0.3 mm 0.012 in.
Release Lever	Mutual Difference	0.0 to 0.2 mm 0.000 to 0.008 in.	–
Gauge Ring to Top of Adjusting Screw	Clearance	0.0 to 0.7 mm 0.000 to 0.028 in.	–
Pressure Plate 2 to Adjusting Screw	Clearance	0.95 to 1.000 mm 0.037 to 0.039 in.	–
Pressure Plate to Straightedge	Clearance	–	0.2 mm 0.008 in.
Belleville Spring	Free Height	7.24 mm 0.285 in.	6.76 mm 0.266 in.
Brake Pedal Shaft to Clutch Pedal Bushing	Clearance	0.05 to 0.20 mm 0.002 to 0.008 in.	1.0 mm 0.039 in.
Brake pedal shaft	O.D.	24.90 to 25.00 mm 0.980 to 0.984 in.	–
Clutch Pedal Bushing	I.D.	25.05 to 25.10 mm 0.986 to 0.988 in.	–
Clutch Lever	O.D.	14.97 to 15.00 mm 0.589 to 0.591 in.	14.13 mm 0.556 in.

W10138740

https://truckmanualshub.com/

3. TIGHTENING TORQUES

Tightening torques of screws, bolts and nuts on the table below are especially specified.
(For general use screws, bolts and nuts : See page G-7.)

Item	N·m	kgf·m	ft-lbs
Lock nut	15.7 to 21.6	1.6 to 2.2	11.6 to 15.9
Starter's **B** terminal mounting nut	7.8 to 9.8	0.8 to 1.0	5.8 to 7.2
Engine mounting screw	48.1 to 55.8	4.9 to 5.7	35.4 to 41.2
Clutch mounting screw and reamer screw	23.5 to 27.5	2.4 to 2.8	17.4 to 20.3
Release fork setting screw	23.5 to 27.5	2.4 to 2.8	17.4 to 20.3
Adjusting screw lock nut	14.7 to 19.6	1.5 to 2.0	10.8 to 14.5
Pressure plate 2 height adjusting screw lock nut	15.7 to 21.6	1.6 to 2.2	11.6 to 15.9
Steering wheel mounting nut	29.4 to 49.0	3.0 to 5.0	21.7 to 36.2
Delivery pipe joint bolt	49.0 to 69.0	5.0 to 7.0	36.1 to 50.6

W1013236

4. CHECKING, DISASSEMBLING AND SERVICING

[1] CHECKING AND ADJUSTING

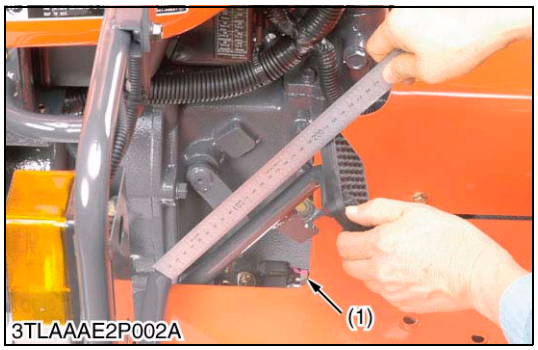

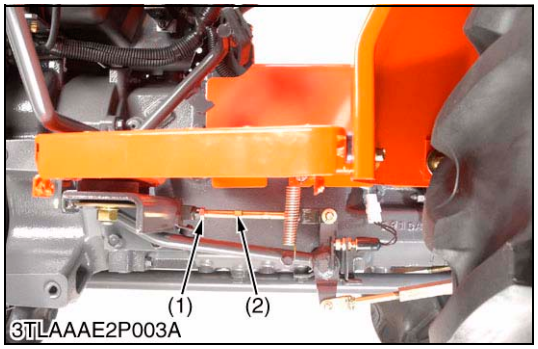

Clutch Pedal Free Travel

1. Stop the engine and remove the key.
2. Slightly depress the clutch pedal and measure free travel at top of pedal stroke.
3. If adjustment is needed, loosen the lock nut (1), and turn the turn buckle (2) to adjust the clutch pedal free travel within factory specification.
4. Retighten the lock nut (1).

Clutch Pedal free travel	Factory spec.	20 to 30 mm 0.8 to 1.2 in.

(1) Lock Nut (2) Turn Buckle

W1015718

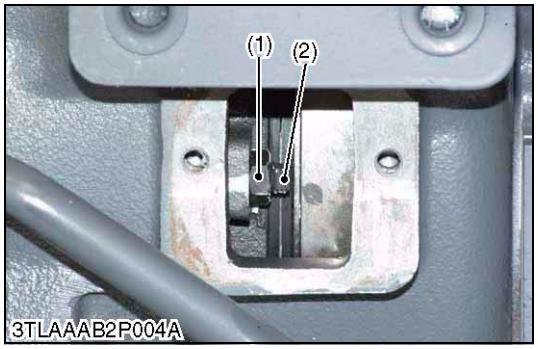

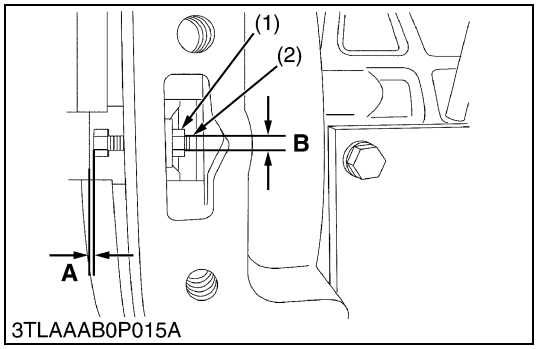

Clearance between Pressure 2 and Adjusting Bolt

1. At first adjust the clutch pedal free travel, as mentioned above.
2. Remove the cover located on the right side of flywheel housing case.
3. Loosen the clock nut (1), tighten the adjusting bolt (2) by using 6 mm spanner until head of the bolt contacts pressure plate slightly.
   Make 3/4 turn counterclockwise to give 0.9 to 1.0 mm (0.035 to 0.039 in.) clearance.
4. Tighten the lock nut (1), holding the adjusting bolt (2).
5. Turn the flywheel to adjust the clearance of other adjusting bolts (three bolts).
6. Repeat step 3 and readjust clutch pedal free travel if necessary.

Clearance (**A**) between pressure plate and adjusting bolt	Factory spec.	0.9 to 1.0 mm 0.035 to 0.039 in.

Tightening torque	Lock nut	15.7 to 21.6 N·m 1.6 to 2.2 Kgf·m 11.6 to 15.9 ft-lbs

(1) Lock Nut
(2) Adjusting Bolt

A : Clearance
B : 6 mm (0.24 in.)

W1015859

[2] PREPARATION

(1) Separating Engine and Clutch Housing

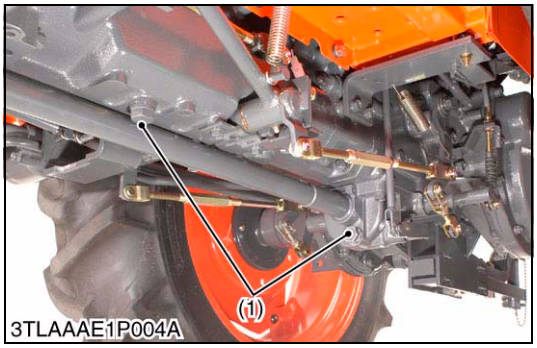

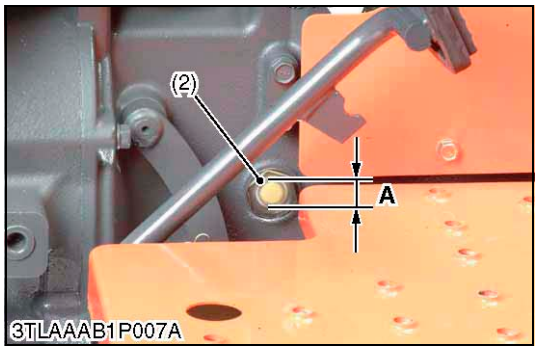

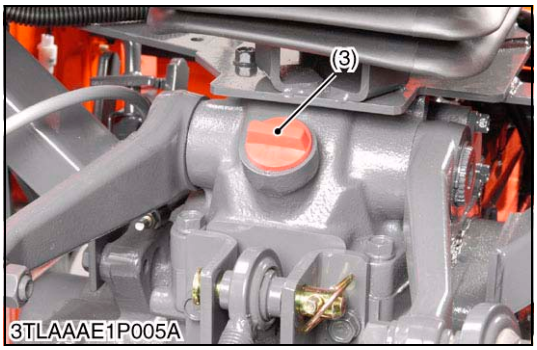

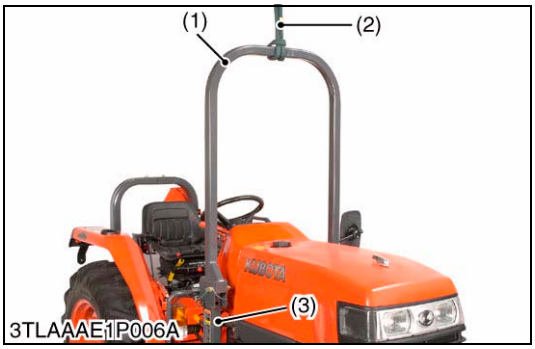

Draining the Transmission Fluid

1. Place an oil pan underneath the transmission case.
2. Remove the drain plugs (1) at the bottom of the transmission case.
3. Drain the transmission fluid.
4. Screw in the drain plugs (1).

(When reassembling)

- Full up new oil to the upper line of the gauge (2) from the filling port after removing the filling plug (3).
- After running the engine for a few minutes, stop it and check the fluid level again, if low, add oil to the prescribed level (**A**).

■ **IMPORTANT**

- **Use only multi-grade transmission fluid. Use of other fluids may damage the transmission or hydraulic system.**
- **Refer to "LUBRICANTS, FUEL AND COOLANT". (See page G-6.)**
- **Never work the tractor immediately after changing the transmission fluid. Keeping the engine at medium speed for a few minutes to prevent damage to the transmission.**
- **Do not mix different brands oil together.**

Transmission fluid	Capacity	27.5 L 7.3 U.S.qts 6.1 Imp.qts

(1) Drain Plug
(2) Gauge
(3) Filling Plug

A : Oil level is acceptable within this range.

W1062402

ROPS Upper and Lower Frame (Center ROPS Type)

1. Secure upper frame (1) with safety strap (2).
2. Remove upper frame (1) from lower frame (3).
3. Remove lower frame (3).

(When reassembling)

■ **NOTE**

- **Do not firmly tighten all screws until most components are attached.**

Tightening torque	Lower frame mounting screw	260 to 304 N·m 26.5 to 31.0 kgf·m 192 to 224 ft-lbs

(1) Upper Frame
(2) Safety Strap
(3) Lower Frame

W1063187

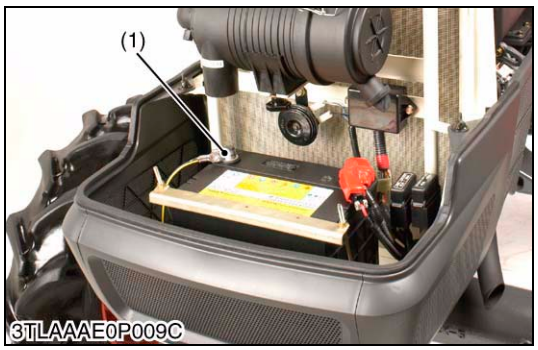

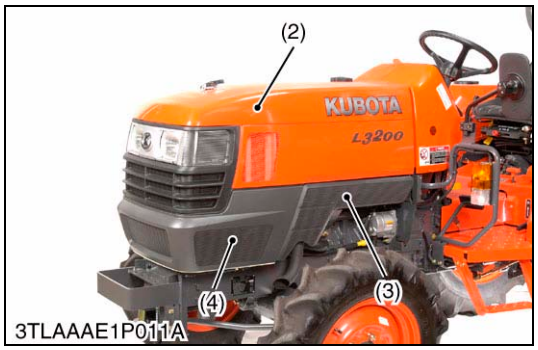

Bonnet and Front Cover

1. Disconnect the battery negative cable (1).
2. Disconnect the connector to head light and the head light wiring.
3. Remove bonnet (2) and side covers (3) on both sides.
4. Remove the front cover (4).

(1) Battery Negative Cable
(2) Bonnet
(3) Side Cover
(4) Front Cover

W1063478

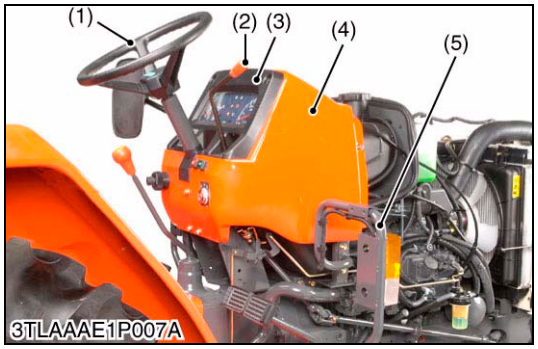

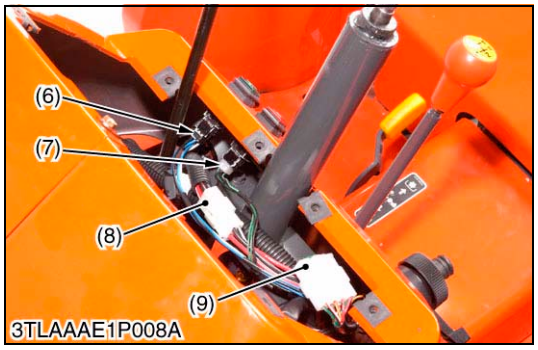

Steering Wheel and Rear Bonnet

1. Disconnect the connector to front position lamp and remove the front position lamp support (5).
2. Remove the steering wheel (1) with steering puller.
3. Remove the throttle grip (2).
4. Disconnect the hour-meter cable from the engine.
5. Remove the meter panel (3).
6. Disconnect the **5P** connector (6) to position light switch.
7. Disconnect the **4P** connector (7) to hazard light switch.
8. Disconnect the **4P** connector (8) to main switch.
9. Disconnect the **8P** connector (9) to combination switch.
10. Remove the rear bonnet (4).

(When reassembling)

Tightening torque	Steering wheel mounting nut	29.4 to 49.0 N·m 3.0 to 5.0 kgf·m 21.7 to 36.2 ft-lbs

(1) Steering Wheel
(2) Throttle Grip
(3) Meter Panel
(4) Rear Bonnet
(5) Front Position Lamp Support
(6) **5P** Connector
(7) **4P** Connector
(8) **4P** Connector
(9) **8P** Connector

W1064593

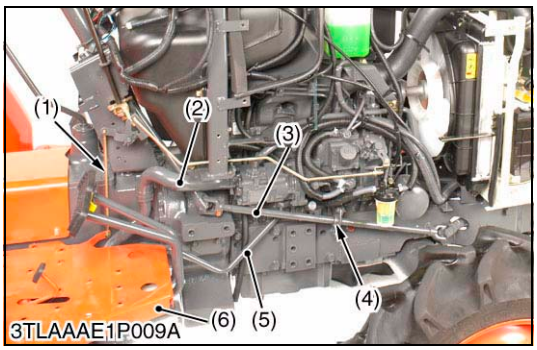

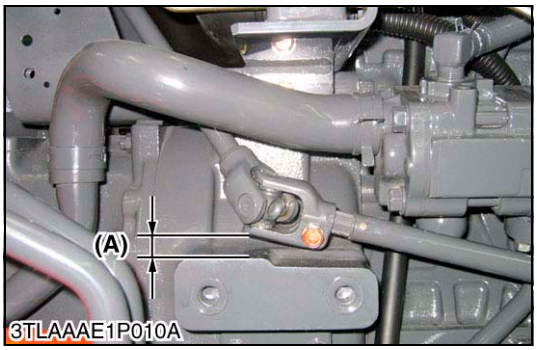

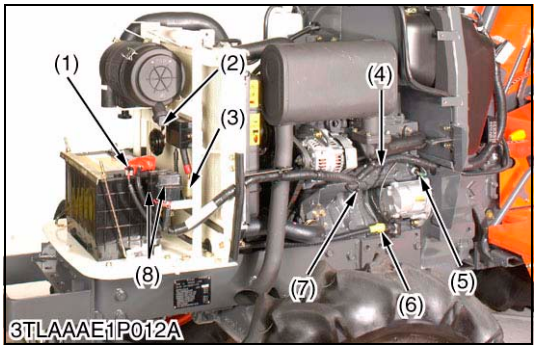

Suction Hose and Delivery Pipe

1. Disconnect the suction hose (2).
2. Remove the step (6) mounting screws.
3. Remove the steering joint shaft (3).
4. Remove the delivery pipe (5).
5. Remove the throttle rod (1).

(When reassembling)

- Lift the universal joint so that there is a clearance **(A)** of more than 5 mm (0.19 in.) between the universal joint and flywheel housing. Then fit the support (4) in position.

Tightening torque	Delivery pipe joint bolt	49 to 69 N·m 5.0 to 7.0 kgf·m 36.1 to 50.6 ft-lbs

(1) Throttle Rod
(2) Suction Hose
(3) Steering Joint Shaft
(4) Support
(5) Delivery Pipe
(6) Step

W1065019

Wiring Harnesses (Left Side)

1. Disconnect **1P** battery connector (1) and remove slow blow fuse boxes (8).
2. Disconnect horn terminals (2).
3. Disconnect **13P** connector to flasher unit (3).
4. Disconnect alternator wringing harness (7).
5. Disconnect starter motor wiring harness (6).
6. Disconnect **1P** connector to engine oil pressure switch (5).
7. Put aside main wiring harness (4).

(1) **1P** Battery Connector
(2) Horn Terminals
(3) **13P** Connector
(4) Main Wiring Harness
(5) **1P** Connector
(6) Starter Motor Wiring Harness
(7) Alternator Wiring Harness
(8) Slow Blow Hose Boxes

W1065603

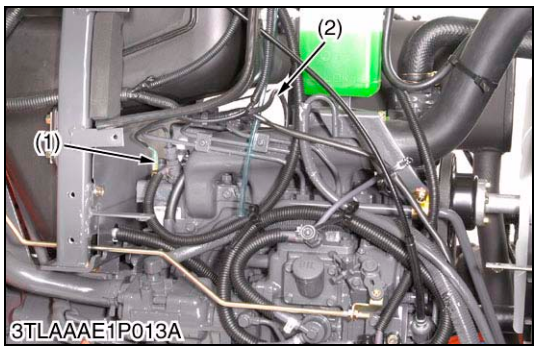

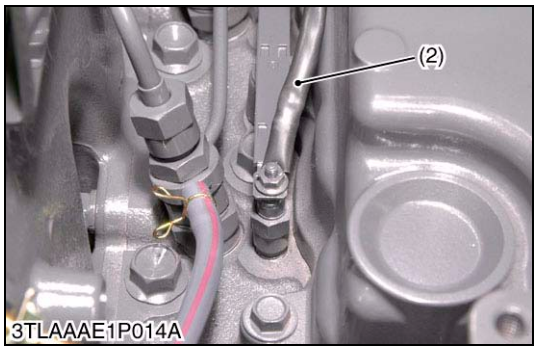

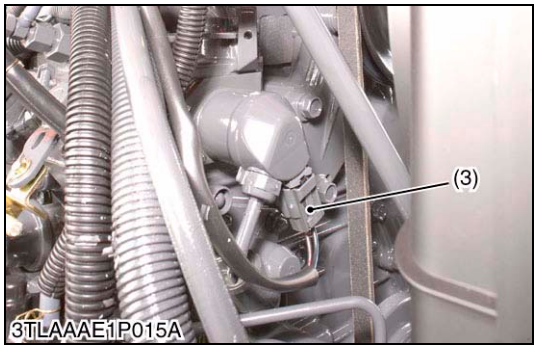

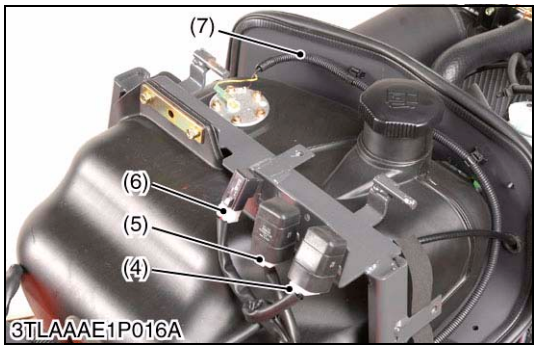

Wiring Harness (Right Side)

1. Disconnect **1P** connector to water temperature sensor (1).
2. Disconnect glow plug wiring harness (2).
3. Disconnect **2P** connector to key stop solenoid (3).
4. Disconnect fuel sensor wiring harness (7).
5. Disconnect **4P** connector to starter relay (6).
6. Disconnect **4P** connector to lamp relay (5).
7. Disconnect **4P** connector to key stop solenoid relay (4).

(1) **1P** Connector
(2) Glow Plug Wiring Harness
(3) **2P** Connector
(4) **4P** Connector to Key Stop Solenoid Relay
(5) **4P** Connector to Lamp Relay
(6) **4P** Connector to Starter Relay
(7) Fuel Sensor Wiring Harness

W1065917

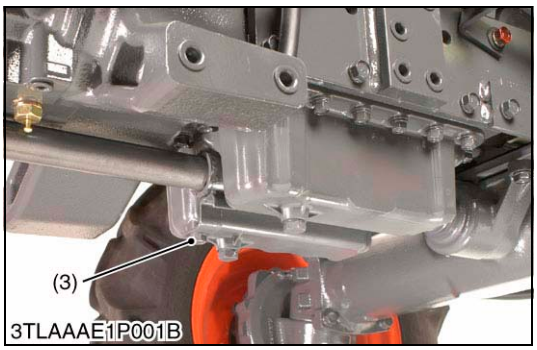

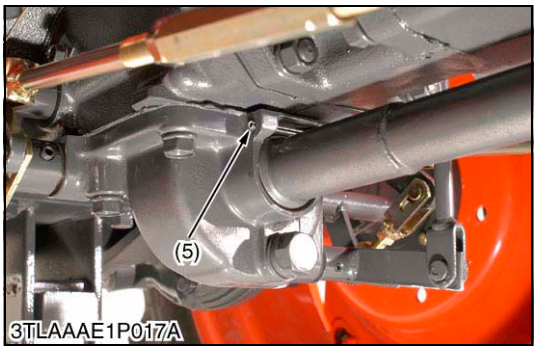

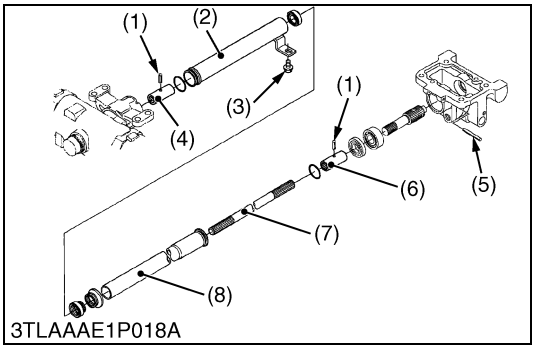

Propeller Shaft

1. Remove the screw (3) then tap out the spring pin (5).
2. Slide the propeller shaft cover 1 (8) to the front and the cover 2 (2) to the rear.
3. Tap out the spring pins (1) and then slide the coupling (6) to the front and coupling (4) to the rear.

(When reassembling)

- Apply grease to the splines of the propeller shaft (7) and pinion shaft.

(1) Spring Pin
(2) Propeller Shaft Cover 2
(3) Screw
(4) Coupling
(5) Spring Pin
(6) Coupling
(7) Propeller Shaft
(8) Propeller Shaft Cover 1

W1030434

Separating Engine from Clutch Housing Case

1. Check the engine and clutch housing case are securely mounted on the disassembling stands.
2. Remove the engine mounting screws, and separate the engine from the clutch housing case.

(When reassembling)

- Apply grease to the splines.
- Apply liquid gasket (Three Bond 1208D or equivalent) to joint face of the engine and clutch housing case.

Tightening torque	Engine mounting screws to clutch housing	48.1 to 55.8 N·m 4.9 to 5.7 Kgf·m 35.4 to 41.2 ft-lbs

W1028001

(2) Separating Clutch Assembly

Clutch Assembly

1. Insert the clutch center tool.
2. Remove the clutch assembly together with the clutch center tool.

(When reassembling)

- Direct the shorter end of the clutch disc boss toward the flywheel.
- Apply molybdenum disulphide (Three Bond 1901 or equivalent) to the splines of clutch disc boss.
- Insert the pressure plate, noting the position of straight pins.

■ **IMPORTANT**

- **Be sure to align the center of disc and flywheel by inserting the clutch tool set.**

■ **NOTE**

- **Do not allow grease and oil on the clutch disc facing.**

Tightening torque	Clutch mounting screws and reamer screws	23.5 to 27.5 N·m 2.4 to 2.8 Kgf·m 17.4 to 20.3 ft-lbs

W1016285

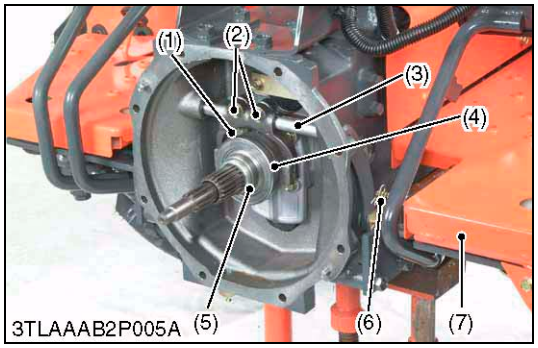

Release Hub and Clutch Lever

1. Remove the step (7) mounting screws.
2. Remove the clutch rod (6).
3. Remove the release fork setting screws (2).
4. Remove the thrust ball bearing (5) and release hub (4) as a unit.
5. Draw out the clutch lever (3).
6. Remove the release fork (1).

(When reassembling)

- Make sure the direction of the release fork is correct.
- Inject grease to the release hub.
- Apply grease to the contact surfaces of the release fork and release hub.
- Apply grease on the clutch lever.

Tightening torque	Release fork setting screw	23.5 to 27.5 N·m 2.4 to 2.8 Kgf·m 17.4 to 20.3 ft-lbs

(1) Release Fork
(2) Screw
(3) Clutch Lever
(4) Release Hub
(5) Thrust Ball Bearing
(6) Clutch Rod
(7) Step

W1016549

[3] DISASSEMBLING AND ASSEMBLING

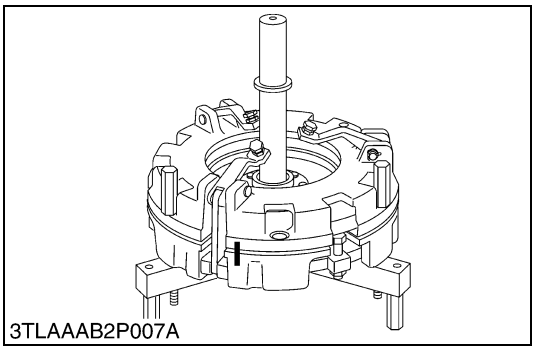
3TLAAAB2P007A

Mounting to Main Clutch Assembling Tool

1. Put parting marks on the clutch cover and pressure plate.
2. Mount the clutch on dual stage clutch exclusive tool (Code No. 07916-90052).

W1017217

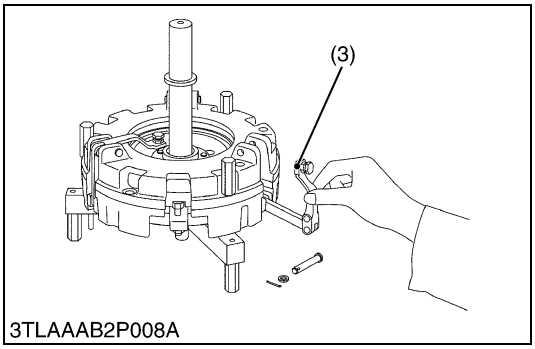

3TLAAAB2P008A

Disassembling Clutch Assembly

1. Draw out the clevis pins and remove the release levers (3).
2. Loosen the three mounting screws evenly and remove them.
3. Remove the clutch cover 2 (8), belleville spring (7), pressure plate 2 (PTO) (6), and clutch disc (PTO) (5) in order.
4. Remove the clutch cover 1 (4), belleville spring (9), and pressure plate 1 (travelling) (2) in order.

(When reassembling)

■ **IMPORTANT**

- **When assembling the clutch covers and pressure plates, be sure to align the parting marks to ensure correct dynamic balance.**

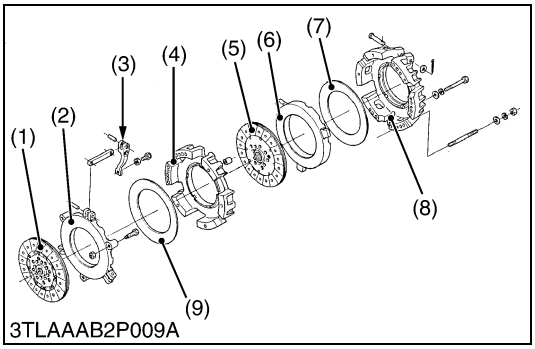

3TLAAAB2P009A

(1) Clutch Disc (Traveling)
(2) Pressure Plate 1 (Traveling)
(3) Release Lever
(4) Clutch Cover 1
(5) Clutch Disc (PTO)
(6) Pressure Plate 2 (PTO)
(7) Belleville Spring
(8) Clutch Cover 2
(9) Belleville Spring

W1017279

[4] SERVICING

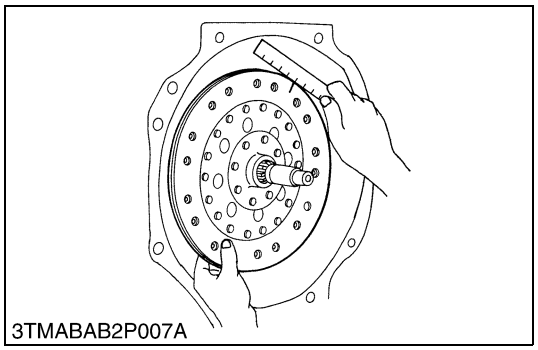
3TMABAB2P007A

Backlash between Clutch Disc Boss and Shaft

1. Mount the PTO clutch disc to the 16T gear shaft.
2. Hold the gear 16T gear shaft so that it does not turn.
3. Rotate disc lightly and measure the displacement around the disc edge.
4. If the measurement exceeds the allowable limit, replace.

Backlash (Displacement around disc edge (PTO))	Allowable limit	2.0 mm 0.079 in.

5. perform measurement for the traveling clutch disc and the main shaft in the same way as a above.

Backlash (Displacement around disc edge (Travelling))	Allowable limit	2.0 mm 0.079 in.

W1016866

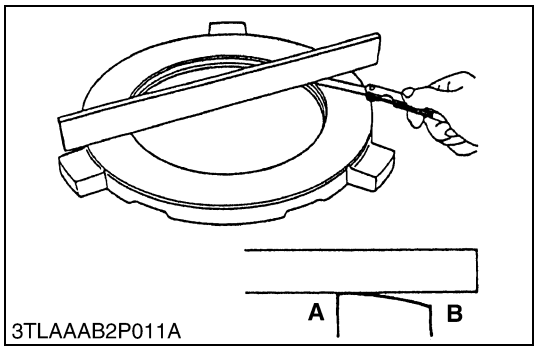

3TLAAAB2P011A

Pressure Plate Flatness

1. Place a straightedge on the pressure plate and measure clearance with a feeler gauge at several points.
2. If the clearance exceeds the allowable limit, replace it.
3. When the pressure plate is worn around its outside and its inside surface only is in contact with the straightedge, replace even if the clearance is within the allowable limit.

Clearance between pressure plate and straightedge	Allowable limit	2.0 mm 0.079 in.

A : Inside **B : Outside**

W1018116

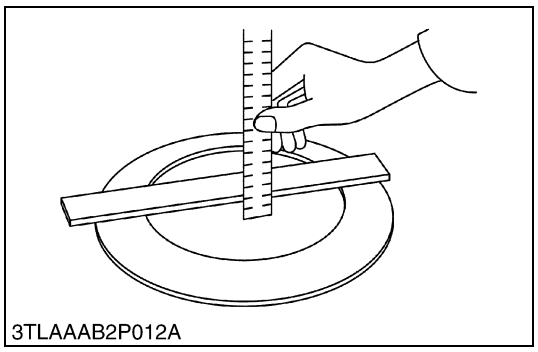
3TLAAAB2P012A

Belleville Spring Free Height

1. Put the belleville spring on the surface plate.
2. Place a straightedge on the belleville spring and measure the free height.
3. If the measurement is less than the allowable limit, replace.
4. Check for cracks, if defects are found, replace.

Belleville spring free height	Factory spec.	7.24 mm 0.285 in.
	Allowable limit	6.76 mm 0.266 in.

W1018241

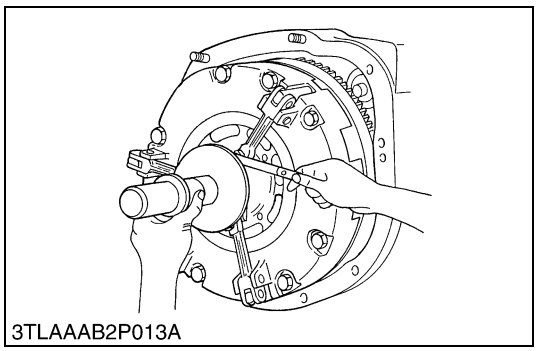
3TLAAAB2P013A

Mutual DIfference of Release Lever

1. Insert the dual stage clutch exclusive tool (Code No, 07916-90052).
2. Measure the clearance between gauge ring and the top of adjusting screw with a feeler gauge.
3. If the clearance is not within the factory specifications, adjust with the adjusting screws.

Mutual difference of release lever	Factory spec.	0.0 to 0.2 mm 0.000 to 0.008 in.

W1018442

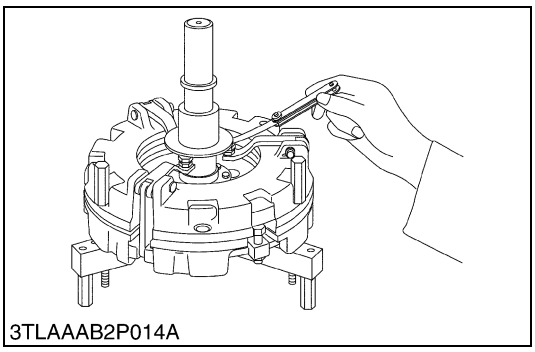
3TLAAAB2P014A

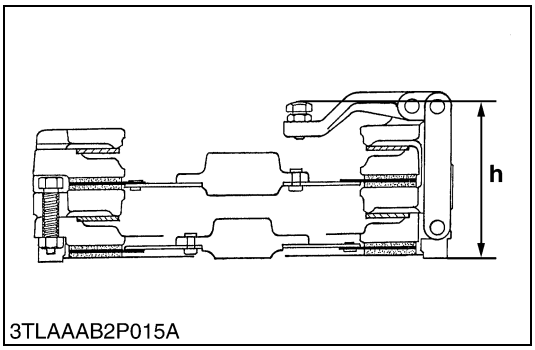

3TLAAAB2P015A

Release Lever Height

1. Mount the dual stage clutch exclusive tool (Code No. 07916-90052).
2. Measure the clearance between gauge ring and the top of adjusting screw with a feeler gauge.
3. If the clearance is not within the factory specifications, adjust with the adjusting screws.

Clearance between gauge ring and the top of adjusting screw	Factory spec.	0.0 to 0.7 mm 0.000 to 0.0028 in.

Tightening torque	Adjusting screw lock nut	14.7 to 19.6 N·m 1.5 to 2.0 Kgf·m 10.8 to 14.5 ft-lbs

■ **IMPORTANT**
- **Be sure to adjust the mutual difference of release lever to within the factory specifications.**

■ **NOTE**
- **Apply adhesive (Cemdine No. 110 by Cemdine Industry Co., Ltd. or equivalent) to the adjusting screws, replace lever and lock nuts.**

(Reference)

Release lever height (**h**)	Reference value	97.8 to 99.2 mm 3.850 to 3906 in.

W1018555

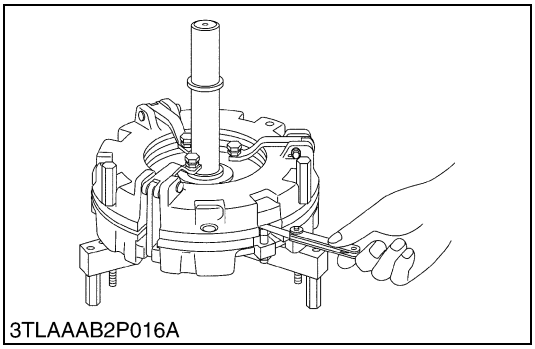
3TLAAAB2P016A

Clearance between Pressure Plate 2 and Adjusting Screw

1. Measure the clearance between pressure plate 2 and the top of adjusting screw with a feeler gauge.
2. If the clearance is not within the factory specifications, rotate adjusting screw to adjust.

Clearance between pressure plate 2 and adjusting screw	Factory spec.	0.9 to 1.0 mm 0.035 to 0.039 in.

Tightening torque	Pressure plate 2 height adjusting screw lock nut	15.7 to 21.6 N·m 2.2 to 2.6 Kgf·m 11.6 to 15.9 ft-lbs

W1018781

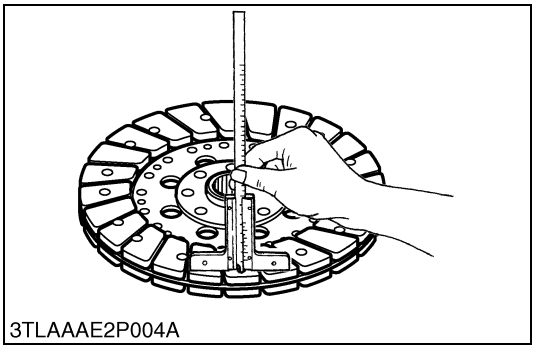
3TLAAAE2P004A

Clutch Disc Wear

1. Measure the depth from clutch disc surface to the top of rivet at least 10 points with a depth gauge.
2. If the depth is less than the allowable limit, replace the disc.
3. If oil is sticking to clutch disc, or disc surface is carbonized, replace the clutch disc.
   In this case, inspect transmission gear shaft oil seal, engine rear oil seal and other points for oil leakage.

Disc surface to rivet top (Depth)	Allowable limit	0.3 mm 0.012 in.

W1031305

https://truckmanualshub.com/

3 TRANSMISSION

https://truckmanualshub.com/

MECHANISM

CONTENTS

1. STRUCTURE 3-M1

1. STRUCTURE

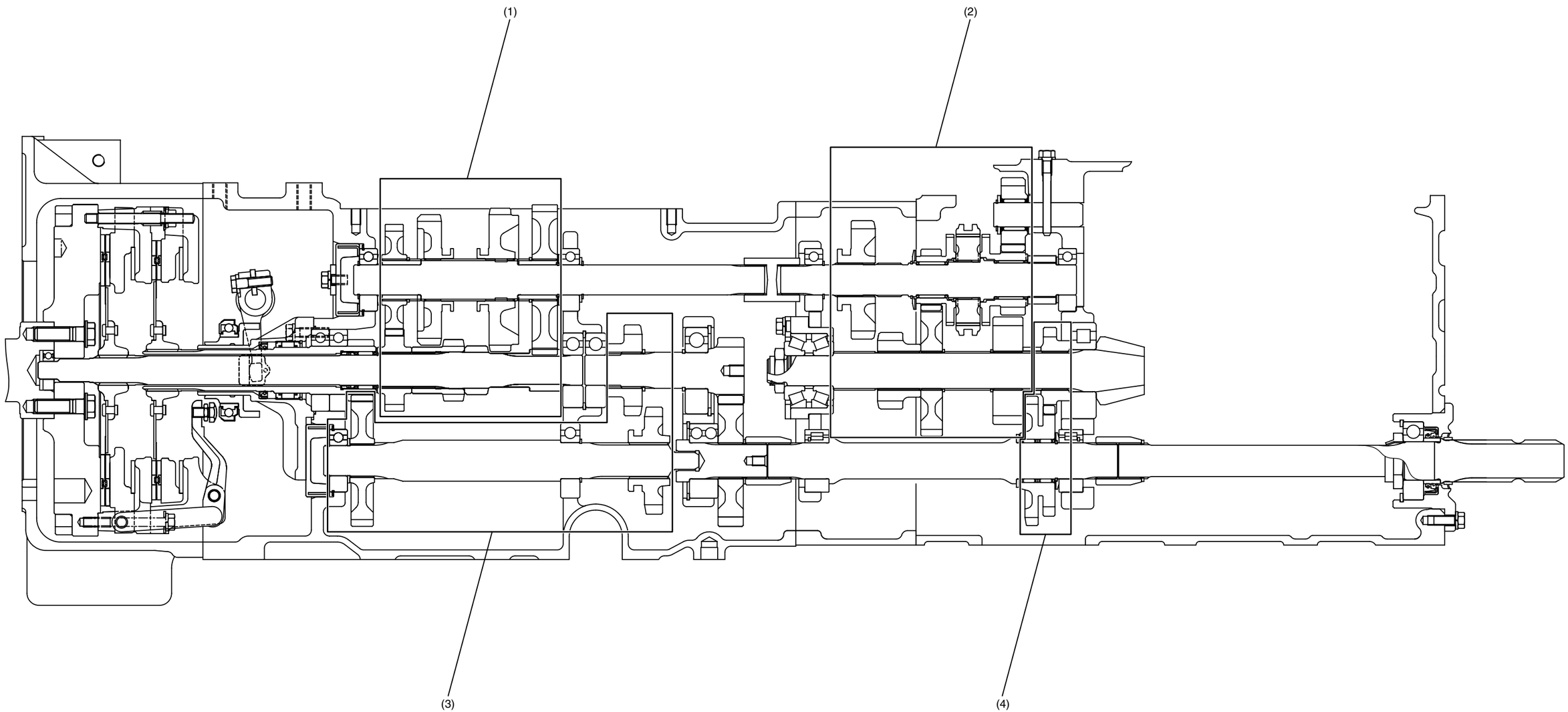

3TLAAAE3P024A

(1) Main Gear Shift Section (2) Lo-Reverse, Hi-Shift Section (3) PTO Gear Section (4) 4WD Section (Drive Gear)

https://truckmanualshub.com/

SERVICING

CONTENTS

1. TROUBLESHOOTING 3-S1
2. SERVICING SPECIFICATIONS 3-S3
3. TIGHTENING TORQUES 3-S4
4. CHECKING, DISASSEMBLING AND SERVICING 3-S5
   [1] PREPARATION 3-S5
      (1) Separating Engine and Clutch Housing 3-S5
      (2) Separating Clutch Housing Case 3-S10
      (3) Separating Transmission Case 3-S11
   [2] DISASSEMBLING AND ASSEMBLING 3-S17
      (1) Clutch Housing Case 3-S17
      (2) Transmission Case 3-S21
      (3) Disassembling Differential Gear Assembly 3-S26
   [3] SERVICING 3-S28
      (1) Clutch Housing 3-S28
      (2) Transmission Case 3-S29

https://truckmanualshub.com/

1. TROUBLESHOOTING

Symptom	Probable Cause	Solution	Reference Page
Excessive Transmission Noise	Transmission fluid insufficient	Replenish	3-S5
	Gear worn or backlash improper	Replace	3-S29
	Bearing worn or broken	Replace	3-S29
	Shift fork worn	Replace	3-S29
	Spline worn	Replace	3-S29
	Snap rings on the shaft come off	Repair or replace	–
	Spiral bevel pinion staking nut improperly tightened	Tighten	3-S22
	Improper backlash between spiral bevel pinion and spiral bevel gear	Adjust	3-S30, S31
	Improper backlash between differential pinion and differential side gear	Adjust	3-S32
Gear Slip Out of Mesh	Shift linkages rusted	Repair	–
	Shifter or shift fork or damaged	Replace	3-S29
	Shift fork interlock ball spring weaken or damaged	Replace	3-S29
	Interlock ball fallen	Reassemble	–
	Gears worn or broken	Replace	–
Hard Shifting	Shifter or shift fork worn or damaged	Replace	3-S29
	Shift fork bent	Replace	–
	Shift linkage rusted	Repair	–
	Shaft part of shift arms rusted	Repair	–
Gears Clash When Shifting	Clutch does not release	Adjust or repair	2-S5
	Gears worn or damaged	Replace	–
Differential Lock Can Not Be Set	Differential lock shift fork damaged	Replace	3-S21
	Differential lock shift fork mounting clevis pin damaged	Replace	3-S21
	Differential lock shifter pin bent or damaged	Replace	3-S27
	Differential lock fork shaft bent or damaged	Replace	3-S21
Differential Lock Pedal Does Not Return	Differential lock pedal return spring weaken or damaged	Replace	–
	Differential lock shifter pin bent or damaged	Replace	3-S27
	Differential lock fork shaft bent	Replace	3-S21

W1014322

Symptom	Probable Cause	Solution	Reference Page
Excessive or Unusual Noise at All Time	Improper backlash between spiral bevel pinion and spiral bevel gear	Adjust	3-S30, S31
	Improper backlash between differential pinion and differential side gear	Adjust	3-S32
	Bearings worn	Replace	3-S29
	Insufficient or improper type of transmission fluid used	Replenish or replace	G-6, 3-S5
Noise While Turning	Differential pinions or differential side gears worn or damaged	Replace	3-S32
	Differential lock binding (does not disengage)	Replace	–
	Bearing worn	Replace	3-S29

W1046443

2. SERVICING SPECIFICATIONS

Item		Factory Specification	Allowable Limit
Gear	Backlash	0.1 to 0.3 mm 0.004 to 0.012 in.	0.4 mm 0.016 in.
Gear to Spline	Clearance	0.030 to 0.078 mm 0.0012 to 0.0031 in.	0.2 mm 0.0079 in.
Shift Fork to Shift Gear Groove	Clearance	0.15 to 0.40 mm 0.006 to 0.016 in.	0.6 mm 0.024 in.
Shift Fork to Shifter Groove	Clearance	0.15 to 0.40 mm 0.006 to 0.016 in.	0.6 mm 0.024 in.
Shift Fork Spring	Free Length	22 mm 0.866 in.	20 mm 0.787 in.
Reverse Gear Bushing to Reverse Shaft	Clearance	0.020 to 0.054 mm 0.0008 to 0.0021 in.	0.3 mm 0.0118 in.
Spiral Bevel Pinion and Differential Assembly	Combined Turning Torque	3.92 to 6.37 N·m 0.4 to 0.65 kgf·m 2.89 to 4.7 ft-lbs	–
Spiral Bevel Pinion to Bevel Gear	Backlash	0.15 to 0.30 mm 0.0059 to 0.0118 in.	–
	Tooth Contact	–	More than 35 %
	Center of Tooth Contact	–	1/3 of the entire width from the small end
Differential Case Bore to Differential Side Gear Boss	Clearance	0.050 to 0.151 mm 0.00197 to 0.00594 in.	0.35 mm 0.0138 in.
Differential Case Bore	I.D.	40.500 to 40.562 mm 1.59449 to 1.59693 in.	–
Differential Side Gear Boss	O.D.	40.411 to 40.450 mm 1.59098 to 1.59252 in.	–
Differential Case Cover Bore to Differential Side Gear Boss	Clearance	0.090 to 0.169 mm 0.00354 to 0.00666 in.	0.35 mm 0.0138 in.
Differential Case Cover Bore	I.D.	40.540 to 40.580 mm 1.59606 to 1.59764 in.	–
Differential Side Gear Boss	O.D.	40.411 to 40.450 mm 1.59098 to 1.59252 in.	–
Differential Pinion Shaft to Differential Pinion	Clearance	0.080 to 0.122 mm 0.00315 to 0.00480 in.	0.25 mm 0.0098 in.
Differential Pinion	I.D.	19.959 to 19.980 mm 0.78579 to 0.78661 in.	–
Differential Pinion Shaft	O.D.	20.060 to 20.081 mm 0.78976 to 0.79059 in.	–
Differential Pinion to Differential Side Gear	Backlash	0.15 to 0.30 mm 0.0059 to 0.0118 in.	0.4 mm 0.016 in.

W1013874

3. TIGHTENING TORQUES

Tightening torques of screws, bolts and nuts on the table below are especially specified.
(For general use screws, bolts and nuts : See page G-7.)

Item	N·m	kgf·m	ft-lbs
Deliver pipe joint bolt	49 to 69	5.0 to 7.0	36.1 to 50.6
Steering support mounting screw	77.5 to 90.2	7.9 to 9.2	57.2 to 66.5
Engine and clutch housing mounting screws	48.1 to 55.8	4.9 to 5.7	35.4 to 41.2
Steering wheel mounting nut	29.4 to 49.0	3.0 to 5.0	21.7 to 36.2
Power steering pipes retaining nut (Power steering type)	34.3 to 44.1	3.5 to 4.5	25.3 to 32.5
Screw with seal washer	11.8 to 20.6	1.2 to 2.1	8.7 to 14.5
Release fork mounting screw	23.5 to 27.5	2.4 to 2.8	17.4 to 20.3
Rear wheel mounting screw and nut	197 to 226	20 to 23	145 to 166
ROPS mounting screw	167 to 196	17.0 to 20.0	123 to 144
ROPS fulcrum screw	118 to 137	12.0 to 14.0	87 to 101
Front wheel drive case	77.5 to 90.2	7.9 to 9.2	57.2 to 66.5
Hydraulic cylinder assembly mounting stud bolt	34.3 to 49.0	3.5 to 5.0	25.3 to 36.2
Hydraulic cylinder mounting screw	77.5 to 90.2	7.9 to 9.2	57.2 to 66.5
Rear axle case mounting screw and nut	48.1 to 55.9	4.9 to 5.7	35.4 to 41.2
Brake case mounting screw and nut	77.5 to 90.2	7.9 to 9.2	57.2 to 66.5
Speed change cover mounting screw	23.5 to 27.5	2.4 to 2.8	17.4 to 20.3
Rear axle case mounting stud bolt	24.5 to 31.4	2.5 to 3.2	18.1 to 23.1
Brake case mounting stud bolt	38.2 to 45.1	3.9 to 4.6	28.2 to 33.3
Brake cam mounting nut	62.8 to 72.5	6.4 to 7.4	46.3 to 53.5
Transmission case and clutch housing mounting nut	77.5 to 90.2	7.9 to 9.2	57.2 to 66.5
Spiral bevel pinion shaft lock nut	147 to 196	15 to 20	109 to 145
PTO shaft lock nut	147 to 196	15 to 20	109 to 145
Differential case cover mounting screw	48.1 to 55.8	4.9 to 5.7	35.4 to 41.2
Spiral bevel gear UBS screw	70.6 to 90.2	7.2 to 9.2	52.1 to 66.5
Pinion bearing case mounting screw	39.2 to 44.1	4.0 to 4.5	28.9 to 32.5
Oil gauge	1.5 to 2.0	0.15 to 0.25	1.1 to 1.8

W1012736

4. CHECKING, DISASSEMBLING AND SERVICING

[1] PREPARATION

(1) Separating Engine and Clutch Housing

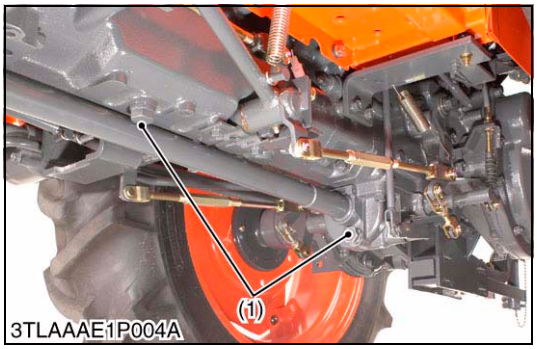

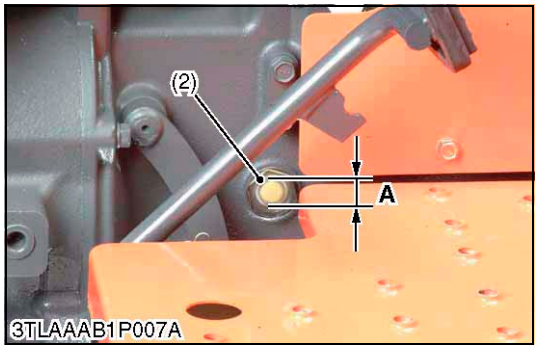

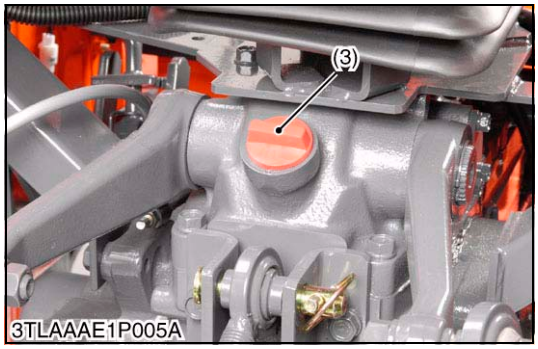

Draining the Transmission Fluid

1. Place an oil pan underneath the transmission case.
2. Remove the drain plugs (1) at the bottom of the transmission case.
3. Drain the transmission fluid.
4. Screw in the drain plugs (1).

(When reassembling)

- Full up new oil to the upper line of the gauge (2) from the filling port after removing the filling plug (3).
- After running the engine for a few minutes, stop it and check the fluid level again, if low, add oil to the prescribed level (**A**).

■ **IMPORTANT**

- **Use only multi-grade transmission fluid. Use of other fluids may damage the transmission or hydraulic system.**
- **Refer to "LUBRICANTS, FUEL AND COOLANT". (See page G-6.)**
- **Never work the tractor immediately after changing the transmission fluid. Keeping the engine at medium speed for a few minutes to prevent damage to the transmission.**
- **Do not mix different brands oil together.**

Transmission fluid	Capacity	27.5 L 7.3 U.S.qts 6.1 Imp.qts

(1) Drain Plug
(2) Gauge
(3) Filling Plug

A : Oil level is acceptable within this range.

W1022472

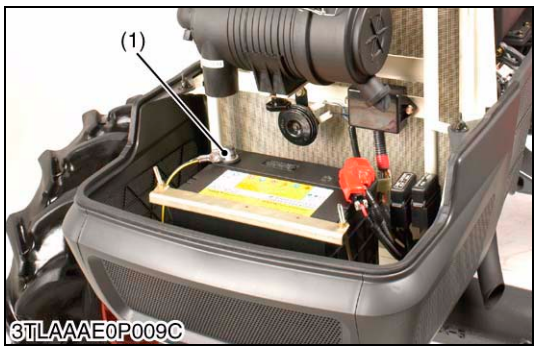

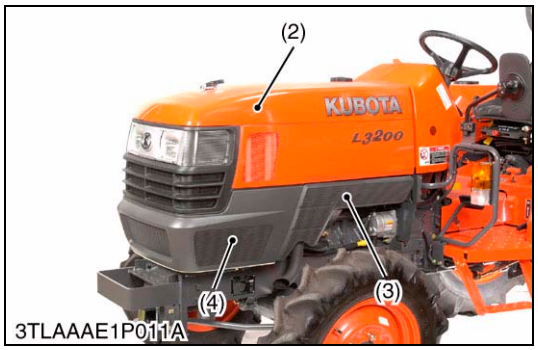

Bonnet and Front Cover

1. Disconnect the battery negative cable (1).
2. Disconnect the connector to head light and the head light wiring.
3. Remove bonnet (2) and side covers (3) on both sides.
4. Remove the front cover (4).

(1) Battery Negative Cable
(2) Bonnet
(3) Side Cover
(4) Front Cover

W1022852

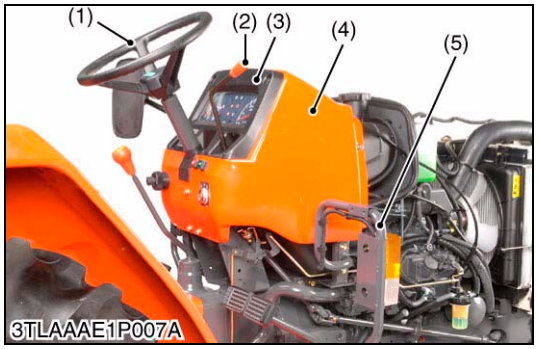

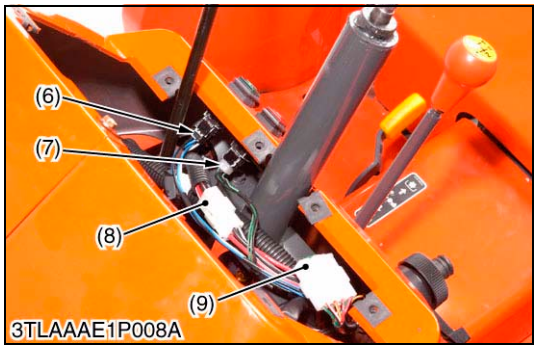

Steering Wheel and Rear Bonnet

1. Disconnect the connector to front position lamps and remove the front position lamp supports (5) on both sides.
2. Remove the steering wheel (1) with steering puller.
3. Remove the throttle grip (2).
4. Disconnect the hour-meter cable from the engine.
5. Remove the meter panel (3).
6. Disconnect the **5P** connector (6) to position light switch.
7. Disconnect the **4P** connector (7) to hazard light switch.
8. Disconnect the **4P** connector (8) to main switch.
9. Disconnect the **8P** connector (9) to combination switch.
10. Remove the rear bonnet (4).

(When reassembling)

Tightening torque	Steering wheel mounting nut	29.4 to 49.0 N·m 3.0 to 5.0 kgf·m 21.7 to 36.2 ft-lbs

(1) Steering Wheel
(2) Throttle Grip
(3) Meter Panel
(4) Rear Bonnet
(5) Front Position Lamp Support
(6) **5P** Connector
(7) **4P** Connector
(8) **4P** Connector
(9) **8P** Connector

W1064593

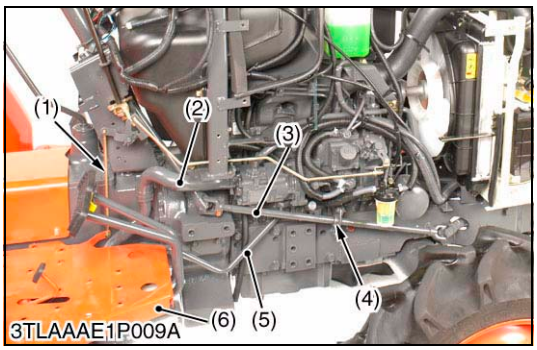

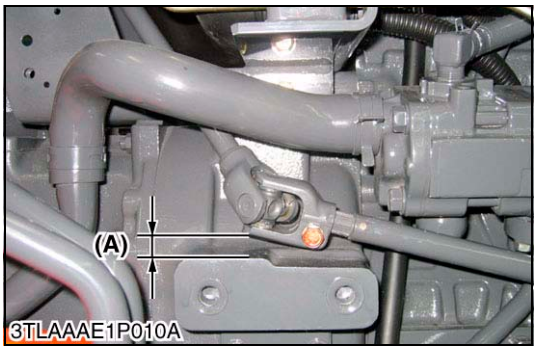

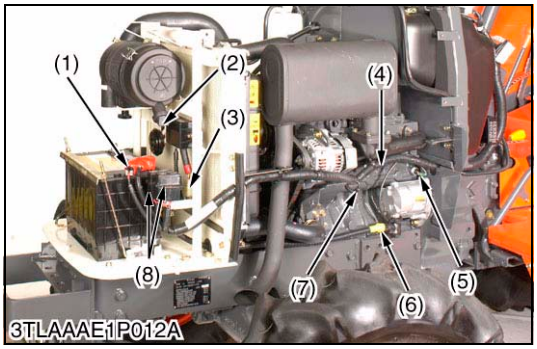

Suction Hose and Delivery Pipe

1. Disconnect the suction hose (2).
2. Remove the step (6) mounting screws.
3. Remove the steering joint shaft (3).
4. Remove the delivery pipe (5).
5. Remove the throttle rod (1).

(When reassembling)

- Lift the universal joint so that there is clearance **(A)** of more than 5 mm (0.19 in.) between the universal joint and flywheel housing. Then fit the support (4) in position.

Tightening torque	Delivery pipe joint bolt	49 to 69 N·m 5.0 to 7.0 kgf·m 36.1 to 50.6 ft-lbs

(1) Throttle Rod
(2) Suction Hose
(3) Steering Joint Shaft
(4) Support
(5) Delivery Pipe
(6) Step

W1065019

Wiring Harness (Left Side)

1. Disconnect **1P** battery connector (1) and remove slow blow fuse boxes (8).
2. Disconnect horn terminals (2).
3. Disconnect **13P** connector to flasher unit (3).
4. Disconnect alternator wringing harness (7).
5. Disconnect starter motor wiring harness (6).
6. Disconnect **1P** connector to engine oil pressure switch (5).
7. Put aside main wiring harness (4).

(1) **1P** Battery Connector
(2) Horn Terminals
(3) **13P** Connector
(4) Main Wiring Harness
(5) **1P** Connector
(6) Starter Motor Wiring Harness
(7) Alternator Wiring Harness
(8) Slow Blow Hose Boxes

W1065603

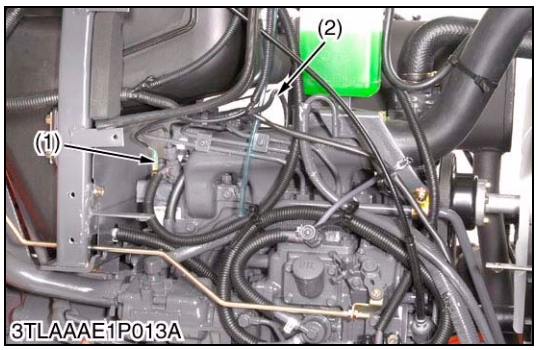

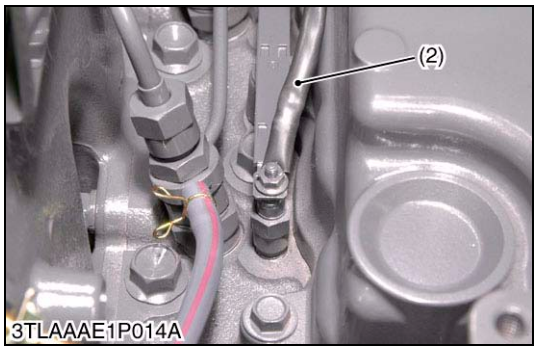

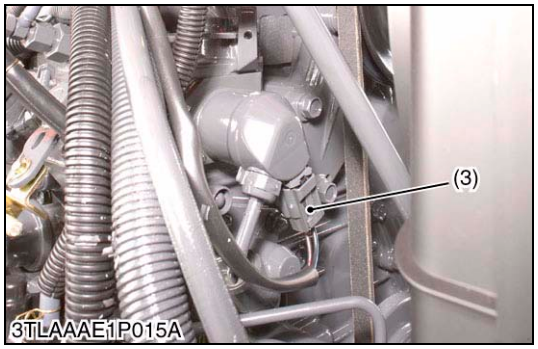

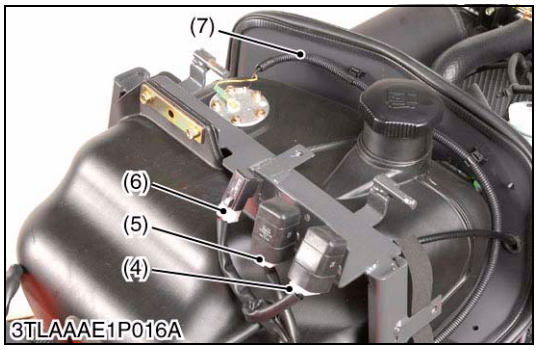

Wiring Harness (Right Side)

1. Disconnect **1P** connector to water temperature sensor (1).
2. Disconnect glow plug wiring harness (2).
3. Disconnect **2P** connector to key stop solenoid (3).
4. Disconnect fuel sensor wiring harness (7).
5. Disconnect **4P** connector to starter relay (6).
6. Disconnect **4P** connector to lamp relay (5).
7. Disconnect **4P** connector to key stop solenoid relay (4).

(1) **1P** Connector
(2) Glow Plug Wiring Harness
(3) **2P** Connector
(4) **4P** Connector to Key Stop Solenoid Relay
(5) **4P** Connector to Lamp Relay
(6) **4P** Connector to Starter Relay
(7) Fuel Sensor Wiring Harness

W1065917

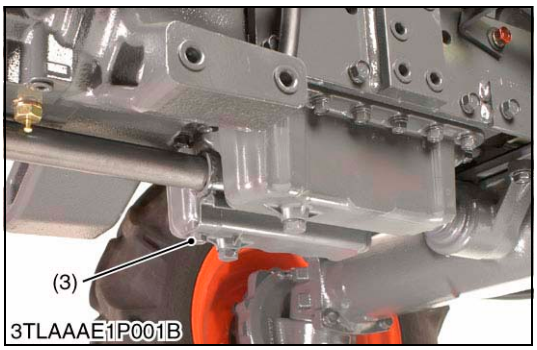

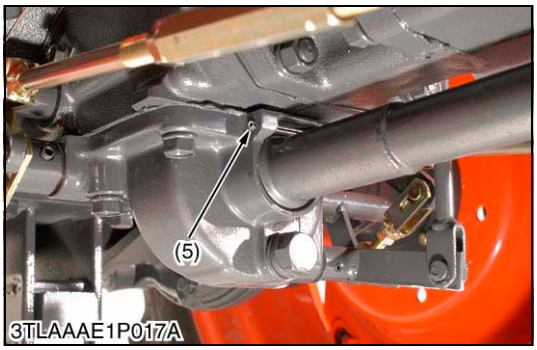

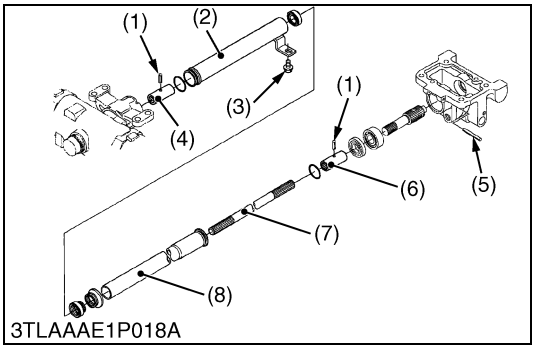

Propeller Shaft

1. Remove the screw (3) then tap out the spring pin (5).
2. Slide the propeller shaft cover 1 (8) to the front and the cover 2 (2) to the rear.
3. Tap out the spring pins (1) and then slide the coupling (6) to the front and coupling (4) to the rear.

(When reassembling)

- Apply grease to the splines of the propeller shaft (7) and pinion shaft.

(1) Spring Pin
(2) Propeller Shaft Cover 2
(3) Screw
(4) Coupling
(5) Spring Pin
(6) Coupling
(7) Propeller Shaft
(8) Propeller Shaft Cover 1

W1066505

Separating Engine from Clutch Housing Case

1. Check the engine and clutch housing case are securely mounted on the disassembling stands.
2. Remove the engine mounting screws, and separate the engine from the clutch housing case.

(When reassembling)

- Apply grease to the splines.
- Apply liquid gasket (Three Bond 1208D or equivalent) to joint face of the engine and clutch housing case.

Tightening torque	Engine mounting screws to clutch housing	48.1 to 55.8 N·m 4.9 to 5.7 kgf·m 35.4 to 41.2 ft-lbs

W1067100

(2) Separating Clutch Housing Case

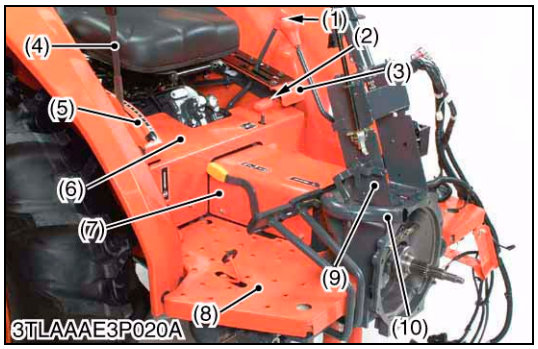

Outer Components

1. Remove the grip (1) and auxiliary change lever guide (3).
2. Remove the grip (2).
3. Remove the grip (4) and position control lever guide (5).
4. Remove the housing cover (7) and center cover (6).
5. Remove the step (8) (R.H), (L.H).
6. Remove the steering support (9).
7. Remove the suction pipe (10).

(When reassembling)

Tightening torque	Steering support mounting screw	77.5 to 90.2 N·m 7.9 to 9.2 kgf·m 57.2 to 66.5 ft-lbs

(1) Grip
(2) Grip
(3) Auxiliary Change Lever Guide
(4) Grip
(5) Position Control Lever Guide
(6) Center Cover
(7) Housing Cover
(8) Step
(9) Steering Support
(10) Suction Pipe

W1013738

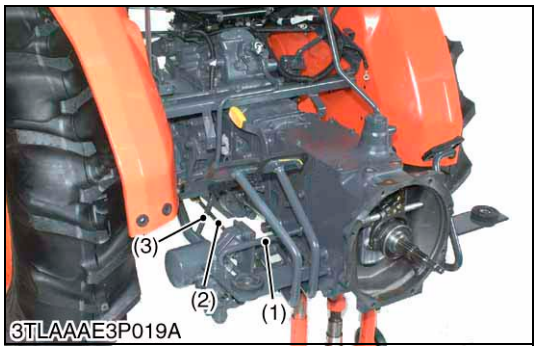

Delivery Pipe and Return Pipe

1. Check the clutch housing case and transmission case are securely mounted on the disassembling stands.
2. Remove the return pipe (1) and delivery pipe (3).
3. Remove the brake rods (2) (R.H), (L.H).

(When reassembling)

Tightening torque	Delivery pipe joint bolt	49.0 to 69.0 N·m 5.0 to 7.0 kgf·m 36.1 to 50.6 ft-lbs

(1) Return Pipe
(2) Brake Rod
(3) Delivery Pipe

W1027079

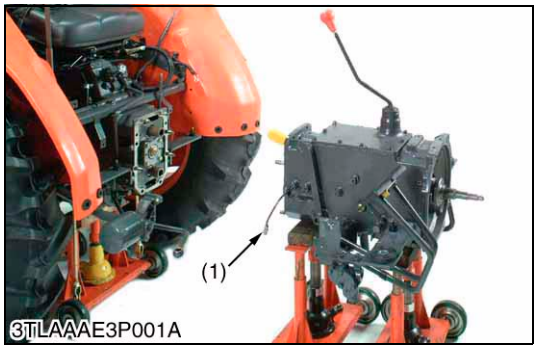

Separating Clutch Housing from Transmission Case

1. Remove the clutch housing mounting nut.
2. Disconnect the PTO safety switch connector (1).
3. Separate the clutch housing from the transmission case.

(When reassembling)

Tightening torque	Transmission case and clutch housing mounting nut	77.5 to 90.2 N·m 7.9 to 9.2 kgf·m 57.2 to 66.5 ft-lbs

(1) PTO Safety Switch Connector

W1014109

(3) Separating Transmission Case

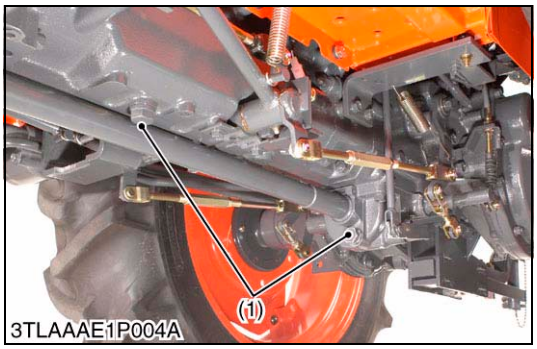

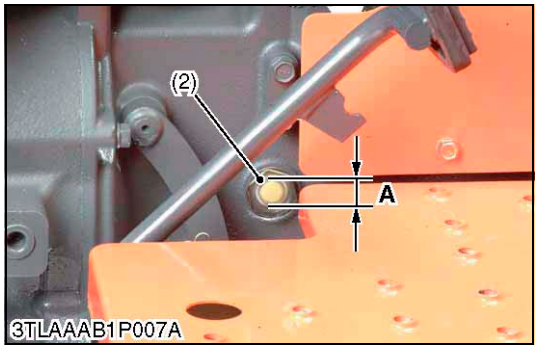

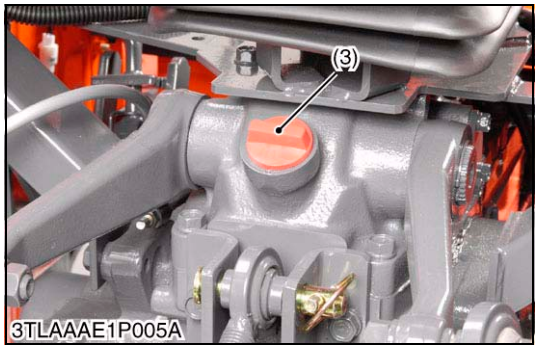

Draining the Transmission Fluid

1. Place an oil pan underneath the transmission case.
2. Remove the drain plugs (1) at the bottom of the transmission case.
3. Drain the transmission fluid.
4. Screw in the drain plugs (1).

(When reassembling)

- Full up new oil to the upper line of the gauge (2) from the filling port after removing the filling plug (3).
- After running the engine for a few minutes, stop it and check the fluid level again, if low, add oil to the prescribed level (**A**).

■ **IMPORTANT**

- **Use only multi-grade transmission fluid. Use of other fluids may damage the transmission or hydraulic system.**
- **Refer to "LUBRICANTS, FUEL AND COOLANT". (See page G-6.)**
- **Never work the tractor immediately after changing the transmission fluid. Keeping the engine at medium speed for a few minutes to prevent damage to the transmission.**
- **Do not mix different brands oil together.**

Transmission fluid	Capacity	27.5 L 7.3 U.S.qts 6.1 Imp.qts

(1) Drain Plug
(2) Gauge
(3) Filling Plug

A : Oil level is acceptable within this range.

W1028669

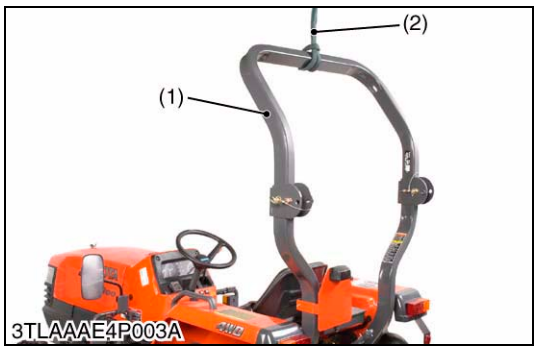

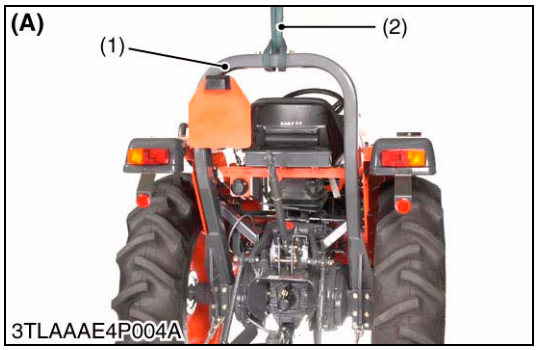

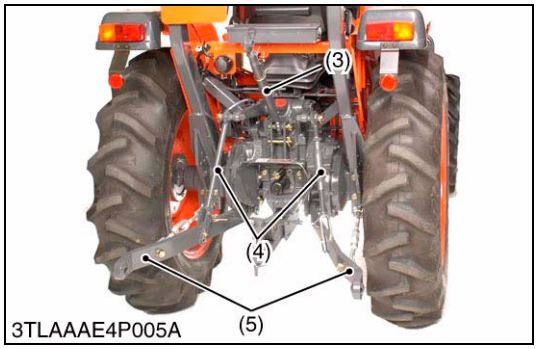

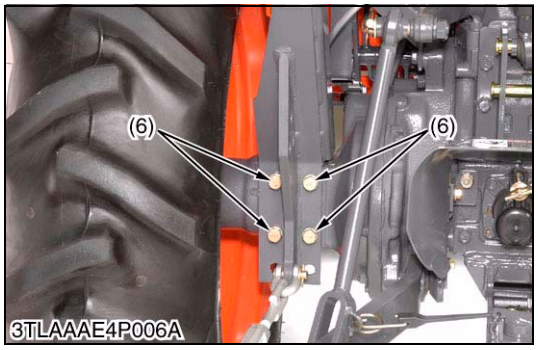

Three Point Linkage and ROPS

1. Secure ROPS (1) with safety strap (2).
2. Remove top link (3), lift rod (4) and lower link (5).
3. Unscrew ROPS mounting screws (6) (both sides), then remove ROPS.

(When reassembling)

Tightening torque	ROPS mounting screw	167 to 196 N·m 17.0 to 20.0 kgf·m 123 to 144 ft-lbs
	ROPS fulcrum screw	118 to 137 N·m 12 to 14 kgf·m 87 to 101 ft-lbs

(1) ROPS
(2) Safety Strap
(3) Top Link
(4) Lift Rod
(5) Lower Link
(6) ROPS Mounting Screws

(A) Center ROPS Type

W1027979

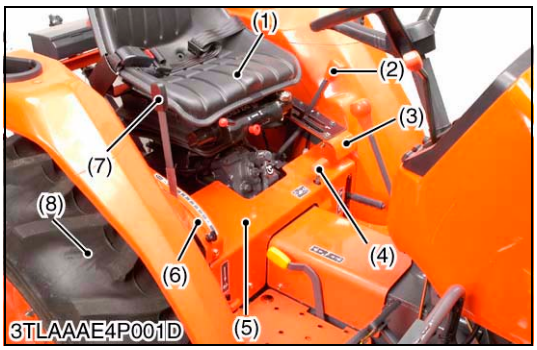

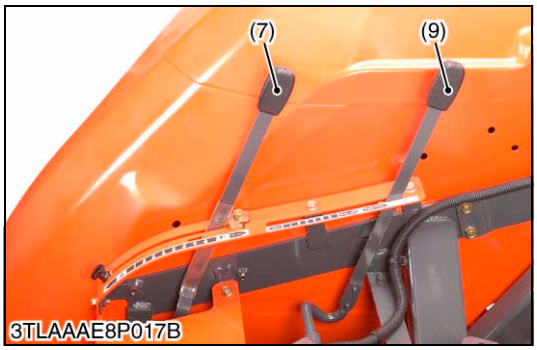

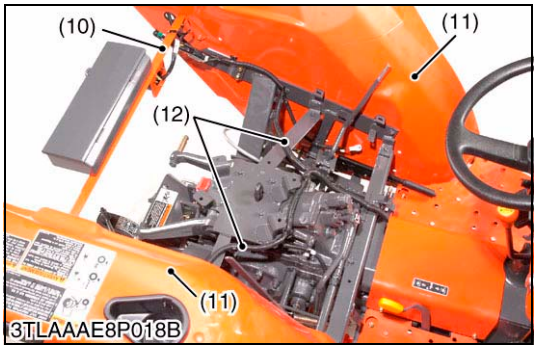

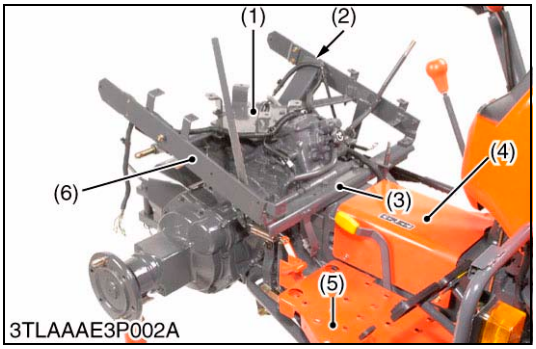

Outer Components

1. Place the disassembling stands under the transmission case.
2. Remove the seat (1).
3. Remove the grip (2), (4), (7) and (9) if equipped.
4. Remove the range gear shift lever guide (3) and the position control lever guide (6).
5. Remove the center cover (5).
6. Remove the rear wheels (8).
7. Disconnect the wiring harness (12) from the rear fender.
8. Remove the rear fenders (11) and the rear fender support (10).

(When reassembling)

Tightening torque	Rear wheel mounting screw and nut	197 to 226 N·m 20 to 23 kgf·m 145 to 166 ft-lbs

(1) Seat
(2) Grip
(3) Range Gear Shift Lever Guide
(4) Grip
(5) Center Cover
(6) Position Control Lever Guide
(7) Grip (Position Control Lever)
(8) Rear Wheels
(9) Grip (Draft Control Lever)
(10) Rear Fender Support
(11) Rear Fenders
(12) Wiring Harness

W1014739

Fender Support

1. Remove the seat support (1).
2. Remove the fender supports (2), (3), (6).
3. Remove the housing cover (4) and the step (5).

(1) Seat Support
(2) Fender Support (LH)
(3) Fender Support Center
(4) Housing Cover
(5) Step
(6) Fender Support (RH)

W1015500

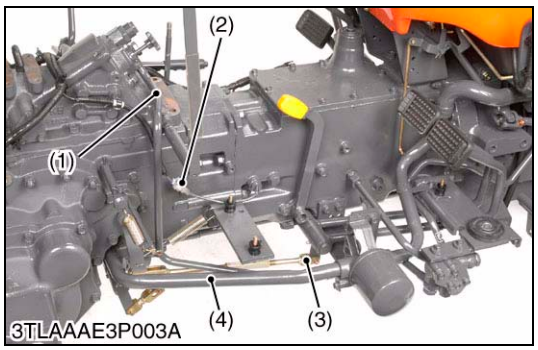

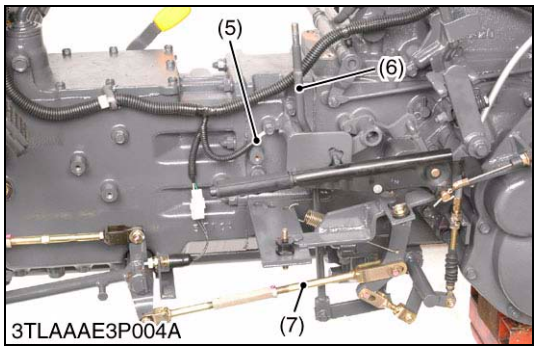

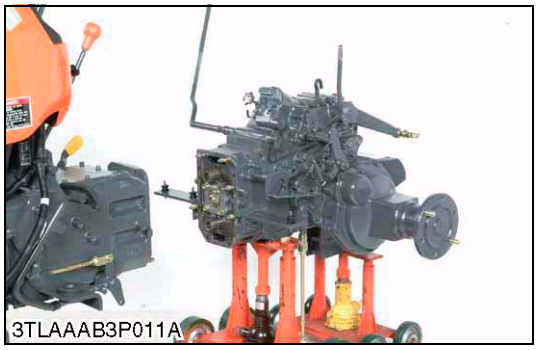

Suction Pipe and Brake Rods

1. Remove the PTO safety switch connector (2).
2. Remove the brake rod RH (3).
3. Remove the suction pipe (4).
4. Disconnect the delivery pipe (1) from the hydraulic cylinder.
5. Disconnect the ground wiring harness (5) and move the main harness to the front.
6. Remove the front wheel drive lever (6).
7. Remove the brake rod LH (7).

(1) Delivery Pipe
(2) PTO Safety Switch Connector
(3) Brake Rod RH
(4) Suction Pipe
(5) Ground Wiring Harness
(6) Front Wheel Drive Lever
(7) Brake Rod LH

W1015833

Front Wheel Drive Case

1. Remove the front wheel drive case (1).

(When reassembling)

- Apply liquid gasket (Three Bond 1208D or equivalent) to join face of front wheel drive case and transmission case.

Tightening torque	Front wheel drive case mounting screw	77.5 to 90.2 N·m 7.9 to 9.2 kgf·m 57.2 to 66.5 ft-lbs

(1) Front Wheel Drive Case

W1016020

Separating Transmission Case and Clutch Housing

1. Check the clutch housing case and transmission case are securely mounted on the disassembling stands.
2. Loosen and remove the transmission case mounting nut.
3. Separate the transmission case from the clutch housing case.

(When reassembling)

- Apply liquid gasket (Three Bond 1208D or equivalent) to joint face of transmission case and clutch housing case.

Tightening torque	Transmission case mounting nut	77.5 to 90.2 N·m 7.9 to 9.2 kgf·m 57.2 to 66.5 ft-lbs

(1) Front Wheel Drive Case

W1016201

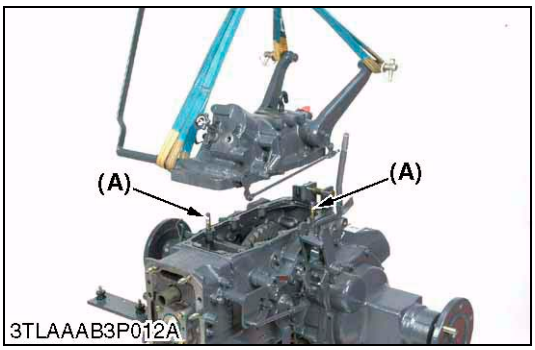

Hydraulic Cylinder Assembly

1. Loosen and remove the hydraulic cylinder assembly mounting screws and nuts.
2. Support the hydraulic cylinder assembly with nylon lift strap and hoist, and then lift it clear.

(When reassembling)

- Apply liquid gasket (Three Bond 1208D or equivalent) to joint face of the hydraulic cylinder assembly and transmission case after eliminating the water, oil and the old remaining liquid gasket.
- When replacing the hydraulic cylinder assembly mounting stud bolts, apply liquid lock (Three Bond 1372 or equivalent) to **(A)** portion of the stud bolt.

Tightening torque	Hydraulic cylinder assembly mounting stud bolts	34.3 to 49.0 N·m 3.5 to 5.0 kgf·m 25.3 to 36.2 ft-lbs
	Hydraulic cylinder assembly mounting screws and nuts	77.5 to 90.2 N·m 7.9 to 9.2 kgf·m 57.2 to 66.5 ft-lbs

■ **NOTE**

- **Reassemble the hydraulic cylinder assembly to the tractor, be sure to adjust the position control feedback rod. (See page 8-S11.)**

W1016745

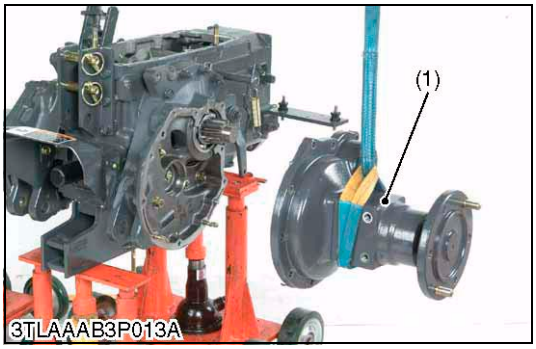

Rear Axle Case

1. Loosen and remove the rear axle case mounting screws and nuts.
2. Support the rear axle case (1) with the nylon lift strap and hoist.
3. Separate the rear axle case from brake case.
4. Follow the same procedure as above for the other side.

(When reassembling)

- Apply liquid gasket (Three Bond 1208D or equivalent) to joint face of the rear axle case and brake case, after eliminating the water, oil and the old remaining liquid gasket.

Tightening torque	Rear axle case mounting screws and nuts	48.1 to 55.9 N·m 4.9 to 5.7 kgf·m 35.4 to 41.2 ft-lbs
	Rear axle case mounting stud bolt	24.5 to 31.4 N·m 2.5 to 3.2 kgf·m 18.1 to 23.1 ft-lbs

(1) Rear Axle Case

W1016596

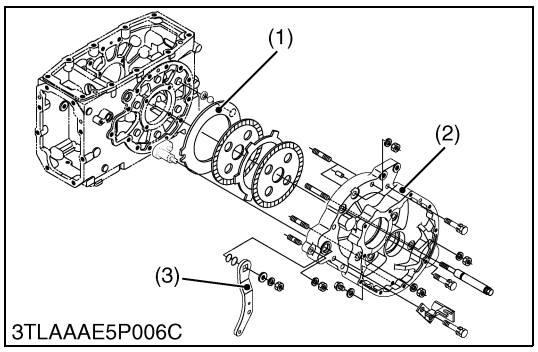

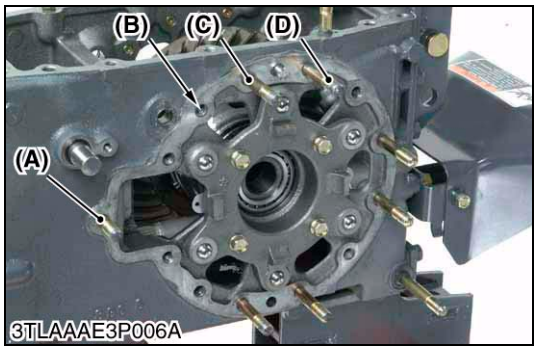

Brake Case

1. Loosen and remove the brake case mounting screws and nuts.
2. Separate the brake case (2), tapping the brake cam lever (3) lightly.

(When reassembling)

- Apply grease to the brake ball seats. (Do not grease excessively.).
- Apply liquid gasket (Three Bond 1208D or equivalent) to joint face of the brake case and transmission case, after eliminating the water, oil and the old remaining liquid gasket.
- Before installing the brake case to the transmission case, install the cam plate (1) to the transmission case.
- Apply liquid lock (Three Bond 1324 or equivalent) to "**(A)**, **(B)**, **(C)**, **(D)**" portions of the stud bolts, RH and LH.

Tightening torque	Brake case mounting stud bolts	38.2 to 45.1 N·m 3.9 to 4.6 kgf·m 28.2 to 33.3 ft-lbs
	Brake case mounting screws and nuts	77.5 to 90.2 N·m 7.9 to 9.2 kgf·m 57.1 to 66.5 ft-lbs
	Brake case mounting lever shaft screw	62.8 to 72.5 N·m 6.4 to 7.4 kgf·m 46.3 to 53.5 ft-lbs

(1) Cam Plate
(2) Brake Case
(3) Brake Cam Lever

W1016886

[2] DISASSEMBLING AND ASSEMBLING

(1) Clutch Housing Case

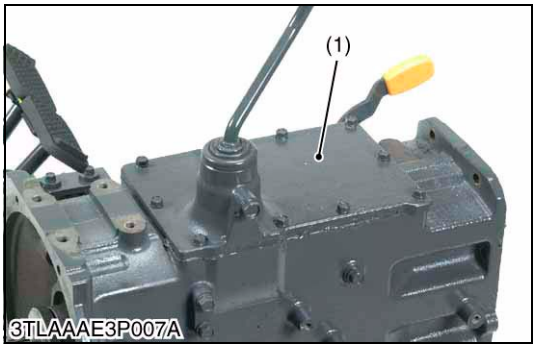

Speed Change Cover

1. Remove the speed change cover (1).

(When reassembling)

- Apply liquid gasket (Three Bond 1208D or equivalent) to joint face of speed change cover and clutch housing.

Tightening torque	Speed change cover mounting screw	23.5 to 27.5 N·m 2.4 to 2.8 kgf·m 17.4 to 20.3 ft-lbs

(1) Speed Change Cover

W1014296

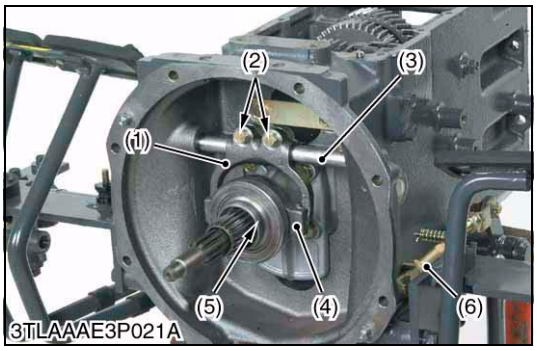

Release Hub and Clutch Lever

1. Remove the clutch rod (6).
2. Remove the release fork setting screws (2).
3. Remove the thrust ball bearing (5) and release hub (4) as a unit.
4. Draw out the clutch lever (3).
5. Remove the release fork (1).

(When reassembling)

- Make sure the direction of the release fork is correct.
- Inject grease to the release hub.
- Apply grease to the contact surfaces of the release fork and release hub.
- Apply grease on the clutch lever.

Tightening torque	Release fork setting screw	23.5 to 27.5 N·m 2.4 to 2.8 kgf·m 17.4 to 20.3 ft-lbs

(1) Release Fork
(2) Screw
(3) Clutch Lever
(4) Release Hub
(5) Thrust Ball Bearing
(6) Clutch Rod

W1017592

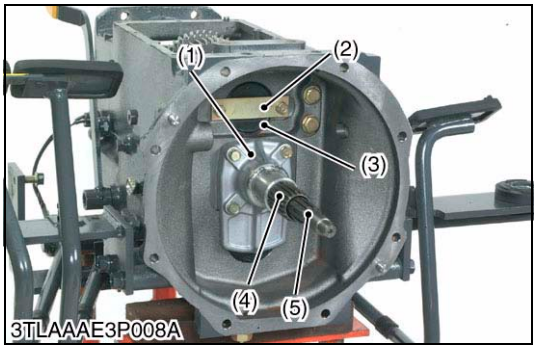

Main Shaft Case

1. Remove the main shaft case (1).
2. Remove the stopper plate (2).
3. Remove the bearing cover (3).

(When reassembling)

- Apply grease to the O-ring and install it to the clutch housing.
- After reassembling the main shaft case, check that 16T gear shaft (4) and main shaft (5) rotate respectively and that they have a little axial play.
- Bearing cover (3) should be replaced with new one.

(When replacing bearing and oil seal in main shaft case)

- Install the oil seal (6) as shown in the figure, noting its direction.
- Apply grease to the needle bearing (7) and press-fit it up to the groove of internal snap ring (8).

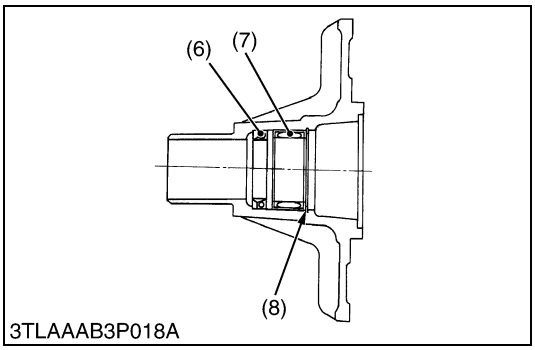

(1) Main Shaft Case
(2) Stopper Plate
(3) Bearing Cover
(4) 16T Gear Shaft
(5) Main Shaft
(6) Oil Seal
(7) Needle Bearing
(8) Snap Ring

W1014893

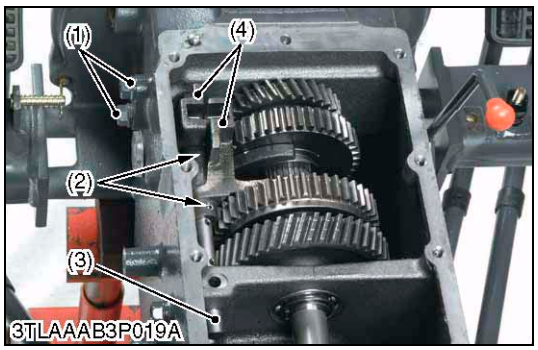

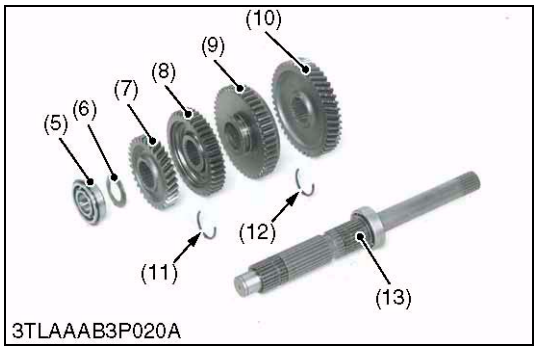

Counter Shaft

1. Remove the bolt (1) and take out the spring and ball.
2. Tap out the spring pin (2).
3. Draw out the fork rod (3) to the front and take out the shift fork (4) and balls.
4. Remove the snap ring (11), (12).
5. Tap out the counter shaft (13) to the rear.

■ **NOTE**

- **When drawing out the counter shaft, take out the following parts one by one: thrust collar (6), 32T gear (7), 41T gear (8) and 45T gears (9) and (10).**

(When reassembling)

- Apply molybdenum disulfide (Three Bond 1091 or equivalent) to the inner circumferential surface of the spline boss.
- Point the oil groove side of thrust collar (6) towards the spline boss.
- With the snap rings in position, make sure that the 32T and 45T gears turn smoothly.

(1) Bolt
(2) Spring Pin
(3) Fork Rod
(4) Shift Fork
(5) Bearing
(6) Thrust Collar
(7) 32T Gear
(8) 41T Gear
(9) 45T Gear
(10) 45T Gear
(11) Snap RIng
(12) Snap RIng
(13) Counter Shaft

W1015187

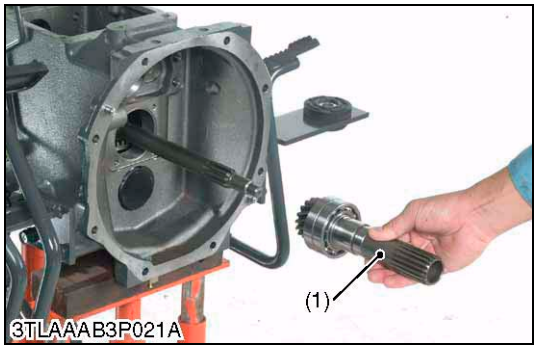

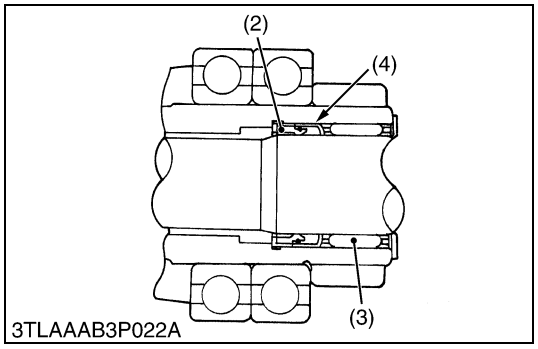

16T Gear Shaft

1. Draw out the 16T gear shaft (1) to the front.

(When reassembling)

- Apply grease to the oil seal (2) and needle bearing (3).

■ **IMPORTANT**

- **Apply grease to the outside of oil seal (2).**
- **Install the oil seal as shown in the figure noting its direction, and press-fit it to 18 mm (0.709 in.) inside of shaft end using guide (4).**

(1) 16T Gear Shaft
(2) Oil Seal
(3) Needle Bearing
(4) Guide

W1018805

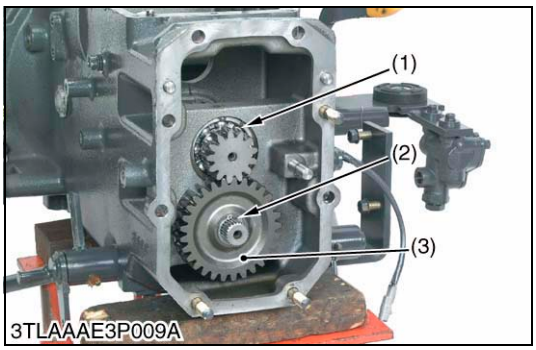

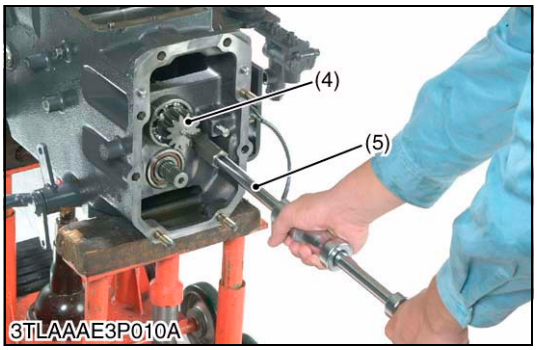

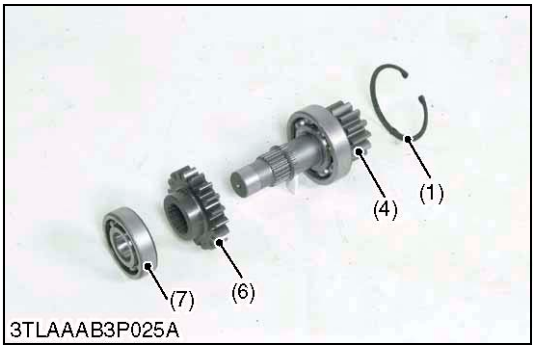

PTO Gear Shaft

1. Remove the external snap ring (2) and 29T gear (3).
2. Remove the internal snap ring (1).
3. Draw out the PTO gear shaft assembly (4) to the rear with a slide hammer (5).

(1) Internal Snap Ring
(2) External Snap Ring
(3) 29T Gear
(4) PTO Gear Shaft Assembly
(5) Sliding Hammer
(6) 19T Gear
(7) Bearing

W1035817

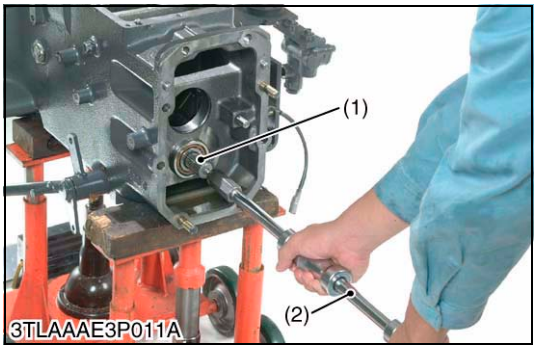

PTO Transmitted Shaft

1. Draw out the PTO transmitted shaft assembly (1) to the rear with a slide hammer (2).

(1) PTO Transmitted Shaft
(2) Sliding Hammer

W1036972

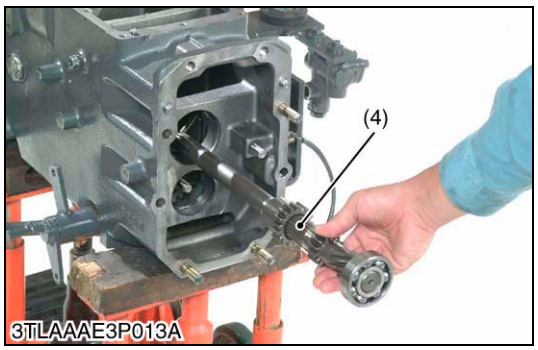

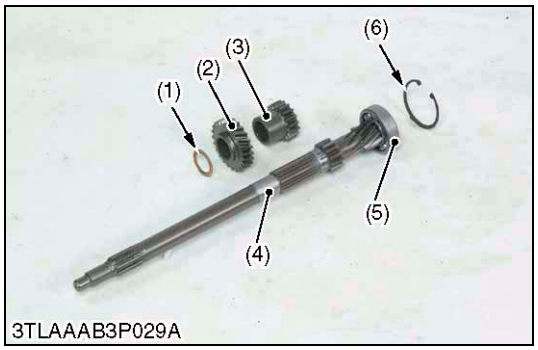

Main Shaft

1. Remove the internal snap ring (6).
2. Tap out the main shaft (4) to the rear.

■ **NOTE**

- **When drawing out the main shaft, take out the following parts one by one: copper washer (1), 23T gear (2) and 17T gear (3).**

(When reassembling)

- Install the copper washer to the front of 25T gear.

(1) Copper Washer
(2) 23T Gear
(3) 17T Gear
(4) Main Shaft
(5) Ball Bearing
(6) Internal Snap Ring

W1034272

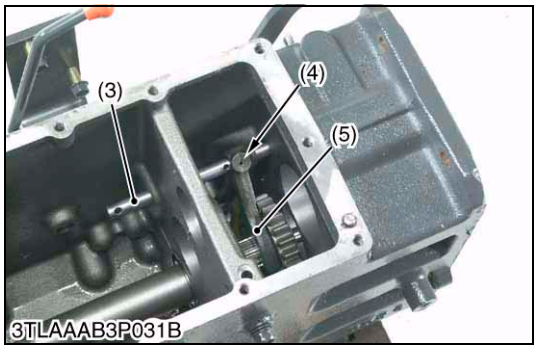

PTO Shift Fork

1. Remove the PTO safety switch (1).
2. Remove the bolt (2) and take out the spring and ball.
3. Tap out the spring pin (4).
4. Draw out the fork rod (3) to the rear.
5. Take out the shift fork (5).

(When reassembling)

- Take care not to damage or lose ball or spring.

(1) PTO Safety Switch
(2) Bolt
(3) Shift Rod
(4) Spring Pin
(5) Shift Fork

W1019275

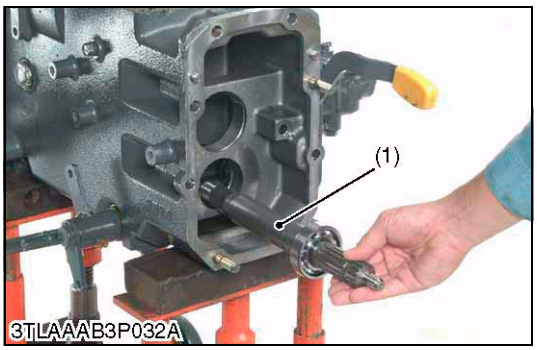

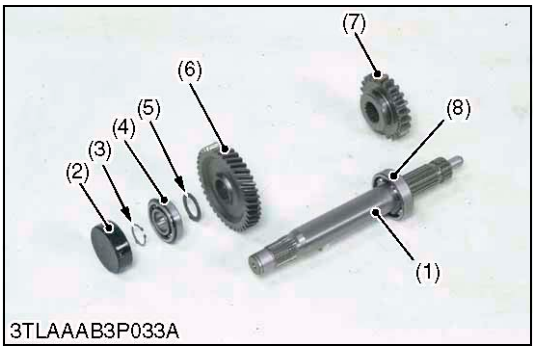

PTO Counter Shaft

1. Remove the bearing cover (2).
2. Remove the external snap ring (3).
3. Tap out the PTO counter shaft (1) to the rear and take out the 39T gear (6).
4. Tap out the PTO counter shaft (1) to the front and take out the 23T gear (7).
5. Tap out the PTO counter shaft (1) to the rear with bearing (8).

(When reassembling)

- Bearing cover (2) should be replaced with new one.

(1) PTO Counter Shaft
(2) Bearing Cover
(3) External Snap Rig
(4) Bearing
(5) Thrust Collar
(6) 39T Gear
(7) 23T Gear
(8) Bearing

W1041152

(2) Transmission Case

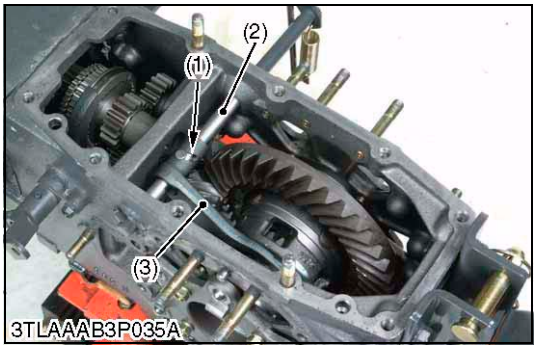

Differential Lock

1. Remove the clevis pin (1).
2. Draw out the differential lock fork shaft (2).
3. Take out the differential lock shift fork (3).

(1) Clevis Pin
(2) Differential Lock Fork Shaft
(3) Differential Lock Shift Fork

W1020311

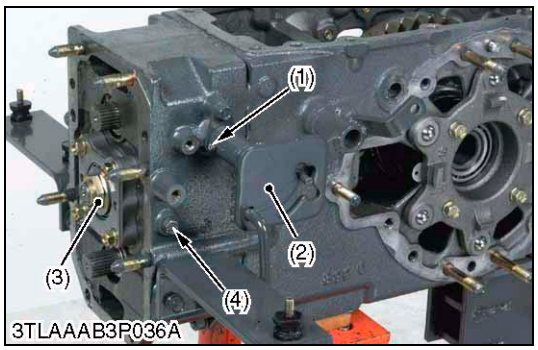

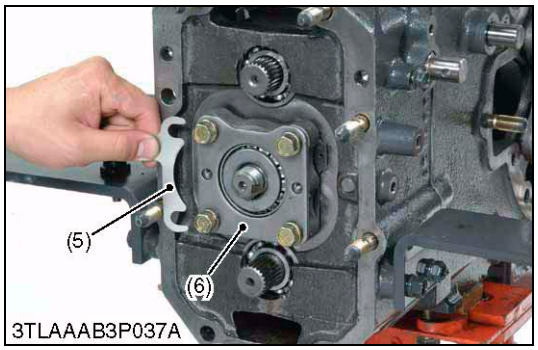

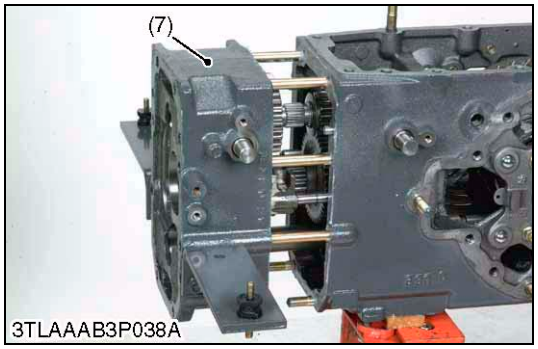

Mid Case

1. Tap out the spring pin (1).
2. Remove the guide plate (2).
3. Remove the lock nut (3) and lock bolt (4).
4. Remove the pinion bearing cover (6) and shims (5).
5. Separate the mid case (7) from the transmission case.

(When reassembling)

- Make sure of the number of shims in the pinion bearing cover.
- Replace the lock nut (3) with a new one, and stake the lock nut firmly after installing the parts on the shaft.

Tightening torque	Lock nut	147 to 196 N·m 15 to 20 kgf·m 109 to 145 ft-lbs
	Pinion bearing case mounting screw	39.2 to 44.1 N·m 4.0 to 4.5 kgf·m 28.9 to 32.5 ft-lbs

(1) Spring Pin
(2) Guide Plate
(3) Lock Nut
(4) Lock Bolt
(5) Shim
(6) Pinion Bearing Cover
(7) Mid Case

W1020909

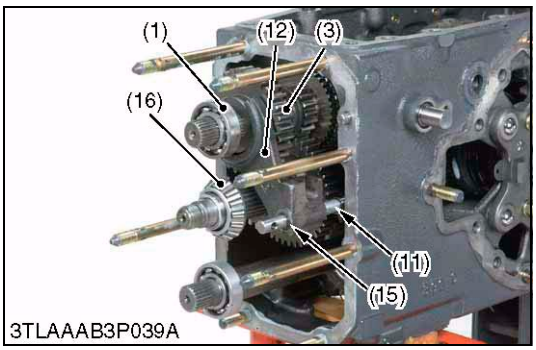

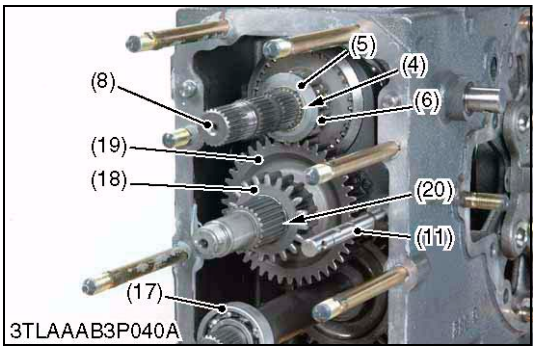

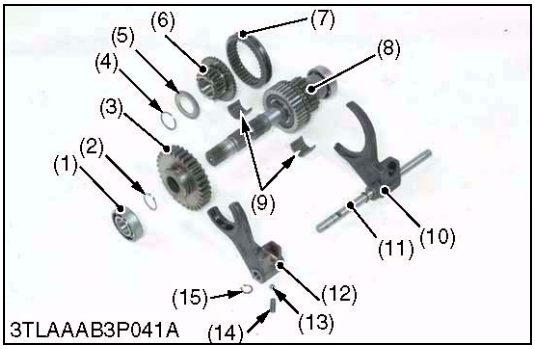

Sub Shaft

1. Remove the bearing (1) and (16) with bearing puller.
2. Remove the external snap ring (2) and (15).
3. Remove the shift fork (12) and 31T gear (3).
4. Remove the external snap ring (4) and collar (5).
5. Remove the bearing (17) and external snap ring (20).
6. Take out the 19T gear (18) and 42T gear (19).
7. Remove the 18T gear (6).
8. Remove the shift fork (10) and shift rod (11) with shifter (7).
9. Tap out the sub shaft (8) to the front.

(When reassembling)

- Take care not to damage or lose ball or spring.

(1) Bearing
(2) External Snap Ring
(3) 31T Gear
(4) External Snap Ring
(5) Collar
(6) 18T Gear
(7) Shifter
(8) Sub Shaft Assembly
(9) Needle Bearing
(10) Shift Fork
(11) Shift Rod
(12) Shift Fork
(13) Ball
(14) Spring
(15) External Snap RIng
(16) Bearing
(17) Bearing
(18) 19T Gear
(19) 42 T Gear
(20) External Snap RIng

W1020895

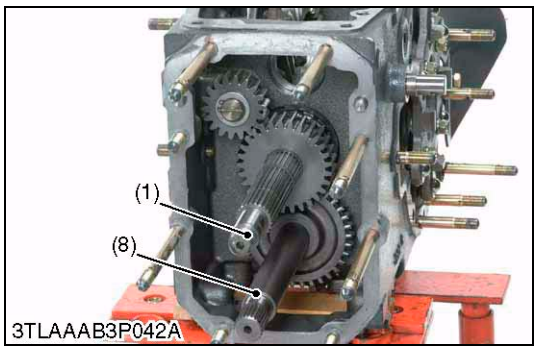

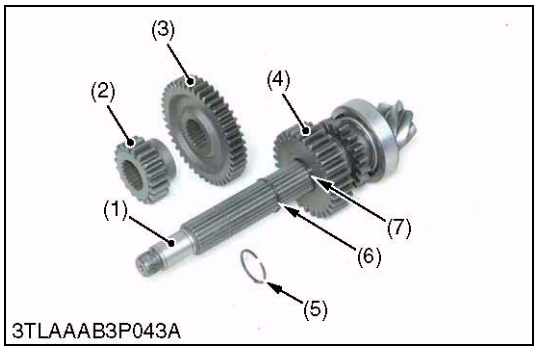

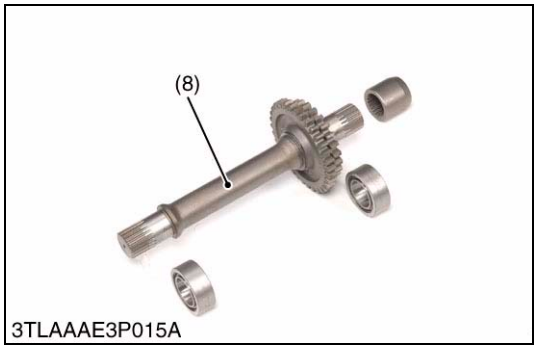

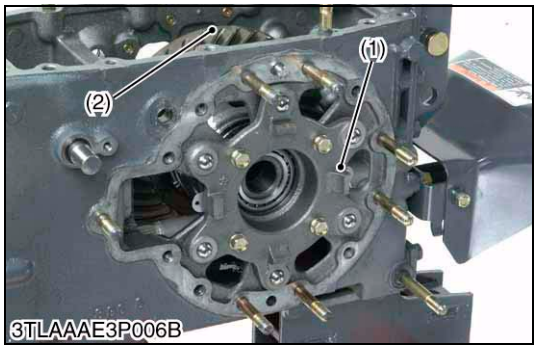

Pinion Shaft

1. Remove the pinion shaft (1) and PTO drive shaft assembly (8).

(1) Pinion Shaft
(2) 19T Gear
(3) 42T Gear
(4) 29T Gear
(5) External Snap Ring
(6) External Snap Ring
(7) External Snap Ring
(8) PTO Drive Shaft Assembly

W1021656

Differential Gear Assembly

1. Remove the differential bearing case (1) mounting screws.
2. Remove the differential bearing case (1), noting the number of left and right shims.
3. Take out the differential gear assembly (2) from transmission case.

(When reassembling)

- Use same number of shim as before disassembling.
- Replace the left and right bearing cases on the same sides as before.
- Apply grease to ball and ball seats.

Tightening torque	Differential bearing case mounting screw	48.1 to 55.9 N·m 4.9 to 5.7 kgf·m 35.5 to 41.2 ft-lbs

(1) Differential Bearing Case
(2) Differential Gear Assembly

W25836914

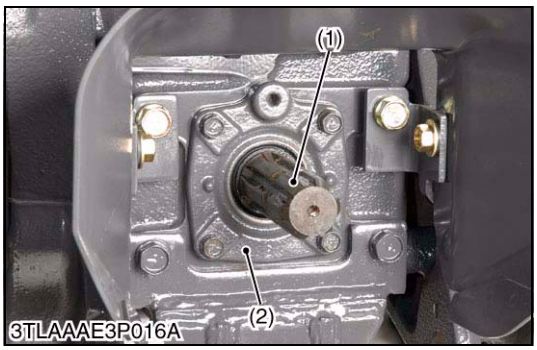

PTO Bearing Case

1. Remove the bearing case (2) mounting screws.
2. Take out the PTO shaft (1) with bearing case.

(1) PTO Shaft
(2) PTO Bearing Case

W1021660

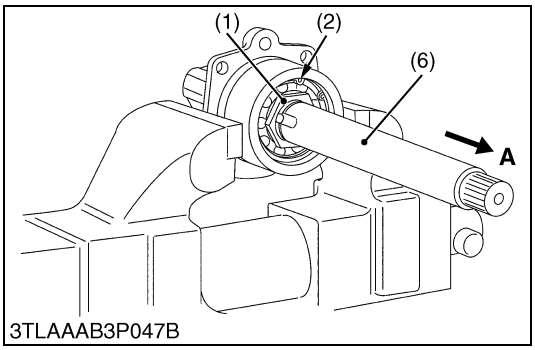

PTO Shaft

1. Remove the internal snap ring (2).
2. Tap out the PTO shaft (6) to the front (**A**).

(When reassembling)

■ **NOTE**

- **Once the staking nut (1) is removed, replace with a new one, and after tightening it to the specified torque, be sure to stake it firmly.**
- **Install the slinger (5) firmly.**
- **After applying liquid gasket (Three Bond 1141 or equivalent) to joint face of the collar (4), and insert the collar to PTO shaft.**
- **Apply grease to oil seal (3) and install it, noting its direction.**

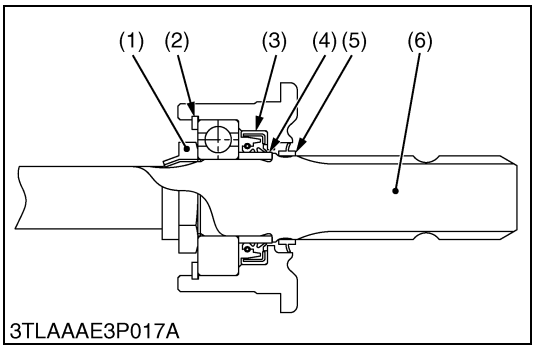

Tightening torque	Lock nut	147 to 196 N·m 15 to 20 kgf·m 109 to 145 ft-lbs

(1) Staking Nut
(2) Internal Snap Ring
(3) Oil Seal
(4) Collar
(5) Slinger
(6) PTO Shaft

W1021874

3TLAAAE3P005B

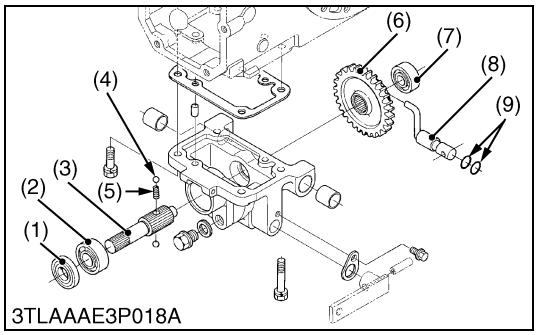

3TLAAAE3P018A

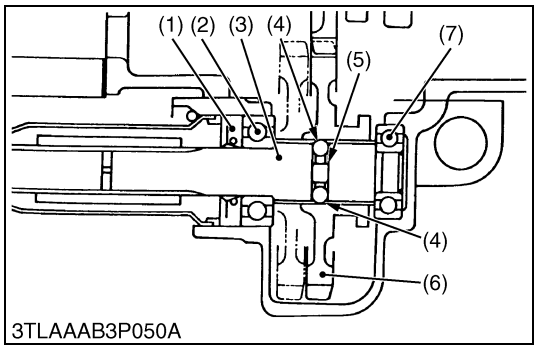

3TLAAAB3P050A

Front Drive Case

1. Removing the front drive case.
2. Remove the oil seal (1).
3. Tap out the propeller shaft 1 (3) to the front.
4. Take out the shift gear (6).

(When reassembling)

- Replace the oil seal (1) with a new one and apply grease to its inside.
- Apply liquid gasket (Three Bond 1208D, 1141 or equivalent) to both faces of the gasket that is to be installed between the front drive case and the transmission case.

(1) Oil Seal
(2) Ball Bearing
(3) Propeller Shaft 1
(4) Balls
(5) Spring
(6) Shift Gear
(7) Ball Bearing
(8) Shift Lever
(9) O-ring

W1029570

(3) Disassembling Differential Gear Assembly

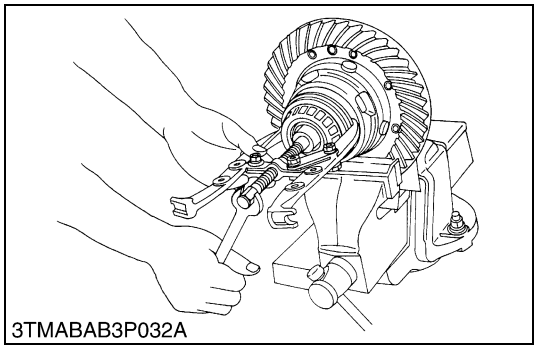
3TMABAB3P032A

Bearing and Differential Lock Shifter

1. Secure the differential gear in a vise.
2. Remove the differential lock shifter and taper roller bearing as a unit with a puller.

W14789652

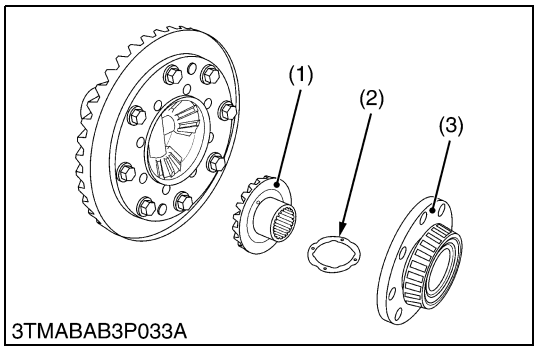

3TMABAB3P033A

Differential Case Cover and Differential Side Gear

1. Remove the differential case cover (3).
2. Remove the differential side gear (1) and differential side gear washer (2).

(When reassembling)

- Apply molybdenum disulfide (Three Bond 1901 or equivalent) to the inner circumferential surface of the differential side gear boss.

Tightening torque	Differential case cover mounting screw	48.1 to 55.8 N·m 4.9 to 5.7 kgf·m 35.4 to 41.2 ft-lbs

(1) Differential Side Gear
(2) Differential Side Gear Washer
(3) Differential Case Cover

W10247220

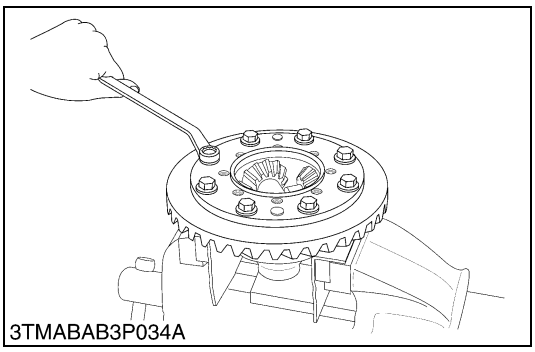
3TMABAB3P034A

Spiral Bevel Gear

1. Remove the spiral bevel gear.

(When reassembling)

- Check the spiral bevel gear for wear or damage. If it is no longer serviceable, replace it. Then, also replace the spiral bevel pinion shaft.
- Apply liquid lock (Three Bond 1372 or equivalent) to the spiral bevel gear UBS screws.

Tightening torque	Spiral bevel gear UBS screw	70.6 to 90.2 N·m 7.2 to 9.2 kgf·m 52.1 to 66.5 ft-lbs

W10249330

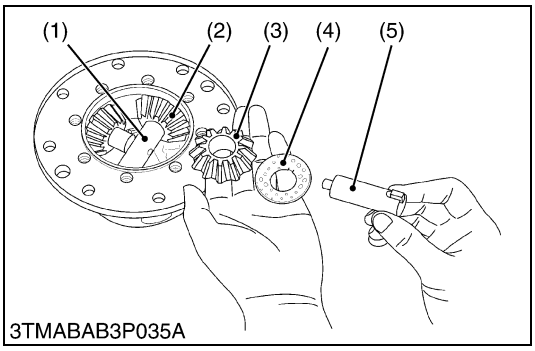

3TMABAB3P035A

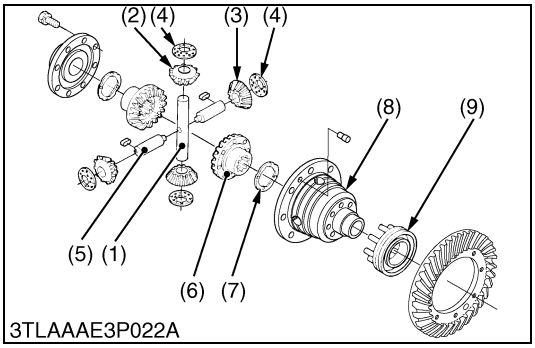

3TLAAAE3P022A

Differential Pinion Shaft and Differential Pinion

1. Draw out the differential pinion shaft 2 (5), and take out the differential pinion (3) and differential pinion washer (4).
2. Draw out the differential pinion shaft (1), and take out the differential pinion (2) and differential pinion washer.

■ **NOTE**

- **Arrange the parts to note their original position.**

(When reassembling)

- Check the differential pinions (2) and (3), and pinion shaft (1) and (5) for excessive wear. If these parts are damaged or excessively worn, replace the parts they are in mesh with, or they slide on.
- Apply molybdenum disulfide (Three Bond 1901 or equivalent) to the inner circumferential surface of the differential pinions.
- Install the parts to their original position.
- Install the differential pinion washers (4), noting its groove position.

(1) Differential Pinion Shaft
(2) Differential Pinion
(3) Differential Pinion
(4) Differential Pinion Washers
(5) Differential Pinion Shaft 2
(6) Differential Side Gear
(7) Differential Side Gear Washer
(8) Differential Case
(9) Differential Lock Shifter
A : Fit Groove

W10250420

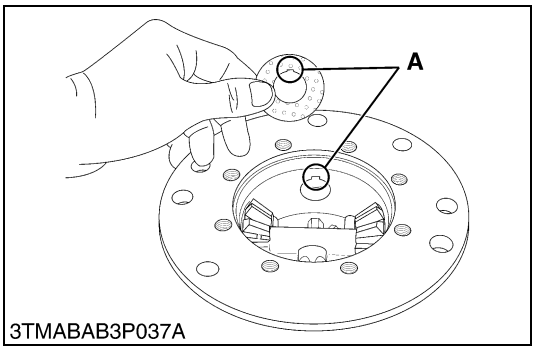

3TMABAB3P037A

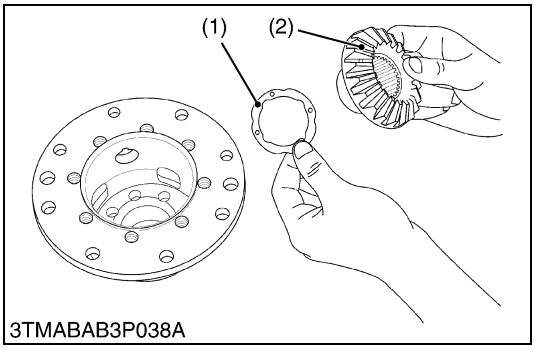

3TMABAB3P038A

Differential Side Gear

1. Take out the differential side gear (2) and differential side gear washer (1).

(When reassembling)

- Check the thrust and bearing surface of both differential side gears (2). If they are worn or damaged, bores in the differential case may also be damaged. Be sure to replace the corresponding parts.

(1) Differential Side Gear Washer
(2) Differential Side Gear

W10252580

[3] SERVICING

(1) Clutch Housing

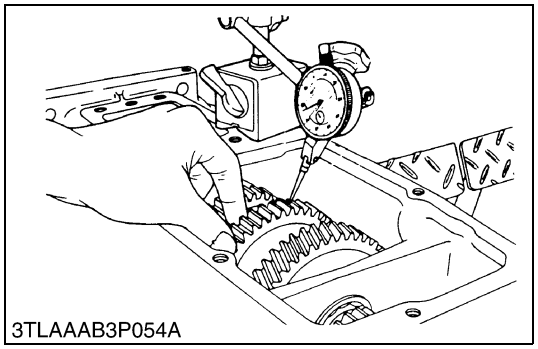
3TLAAAB3P054A

Gear Backlash

1. Set a dial indicator (lever type) on one of the tooth faces.
2. Clamp the mating gear.
3. Measure backlash by turning the gear to be measured.
4. If the reading exceeds the allowable limit, replace the gear.

Gear backlash	Factory spec.	0.1 to 0.3 mm 0.004 to 0.012 in.
	Allowable limit	0.4 mm 0.016 in.

W1023827

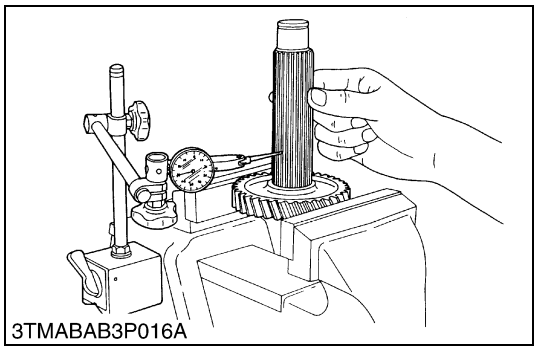
3TMABAB3P016A

Clearance between Gear and Spline

1. Secure the gear with a vise.
2. Set a dial indicator (lever type) with its finger on the spline.
3. Move the shaft to measure the clearance.
4. If the clearance exceeds the allowable limit, replace.

Clearance between gear and spline	Factory spec.	0.030 to 0.078 mm 0.0012 to 0.0031 in.
	Allowable limit	0.2 mm 0.0079 in.

W10258480

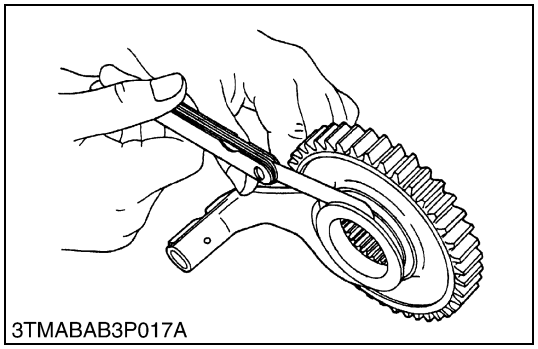
3TMABAB3P017A

Clearance between Shift Fork and Shift Gear Groove or Shifter Groove

1. Place fork in the groove to check clearance with feeler gauge.
2. If the clearance exceeds allowable limit, replace.

Clearance between shift fork and shift gear groove	Factory spec.	0.15 to 0.40 mm 0.006 to 0.016 in.
	Allowable limit	0.6 mm 0.024 in.

W10269970

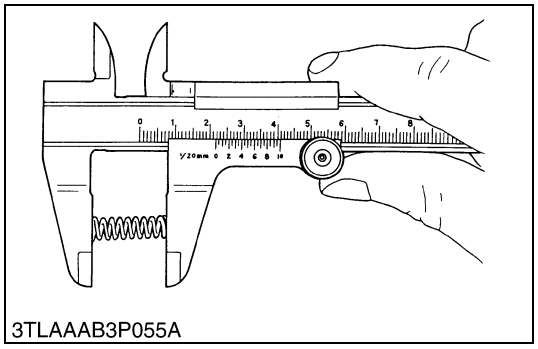
3TLAAAB3P055A

Free Length of the Shift Fork Spring

1. Measure free length of spring with vernier caliper.
2. If the free length is less than the allowable limit, replace.

Free length of the shift fork spring	Factory spec.	22 mm 0.866 in.
	Allowable limit	20 mm 0.787 in.

W1023724

(2) Transmission Case

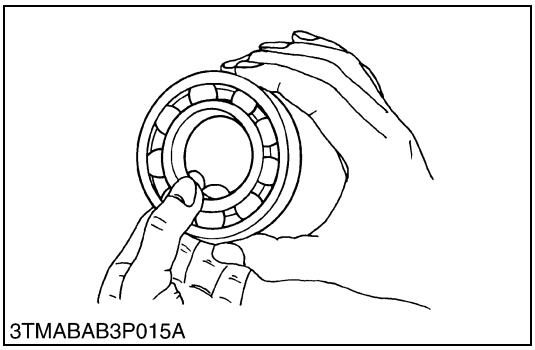
3TMABAB3P015A

Checking Bearing

1. Hold the inner race, push and pull the outer race in all directions to check for wear and roughness.
2. Apply transmission fluid to the bearing, and hold the inner race. Then turn the outer race to check rotation.
3. If there is any defect, replace it.

W123456980

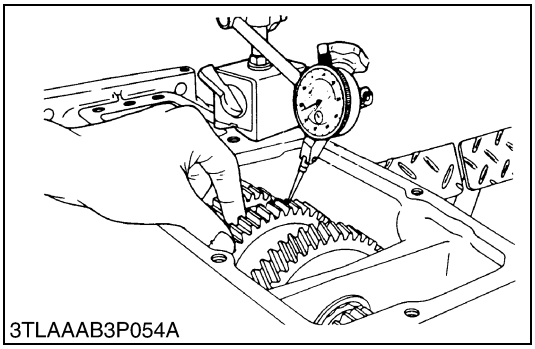
3TLAAAB3P054A

Gear Backlash

1. Set a dial indicator (lever type) on one of the tooth faces.
2. Clamp the mating gear.
3. Measure backlash by turning the gear to be measured.
4. If the reading exceeds the allowable limit, replace the gear.

Gear backlash	Factory spec.	0.1 to 0.3 mm 0.004 to 0.012 in.
	Allowable limit	0.4 mm 0.016 in.

W1025475

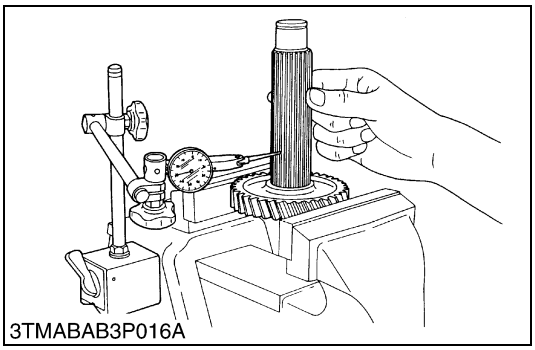
3TMABAB3P016A

Clearance between Gear and Spline

1. Secure the gear with a vise.
2. Set dial indicator (lever type) with its finger on the spline.
3. Move the shaft to measure clearance.
4. If the clearance exceeds the allowable limit, replace.

Clearance between gear and spline	Factory spec.	0.030 to 0.078 mm 0.0012 to 0.0031 in.
	Allowable limit	0.2 mm 0.0079 in.

W1234567

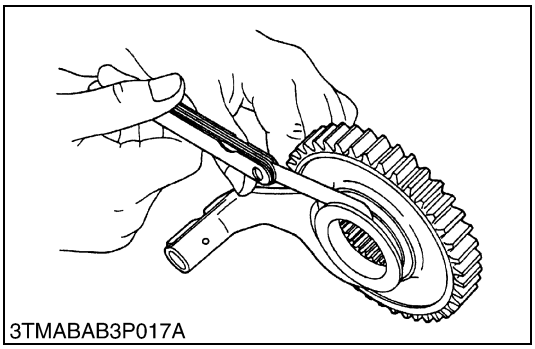
3TMABAB3P017A

Clearance between Shift Fork and Shift Gear Groove or Shifter Groove

1. Place fork in the groove to check clearance with feeler gauge.
2. If the clearance exceeds allowable limit, replace.

Clearance between shift fork and shift gear groove	Factory spec.	0.15 to 0.40 mm 0.006 to 0.016 in.
	Allowable limit	0.6 mm 0.024 in.

W963258140

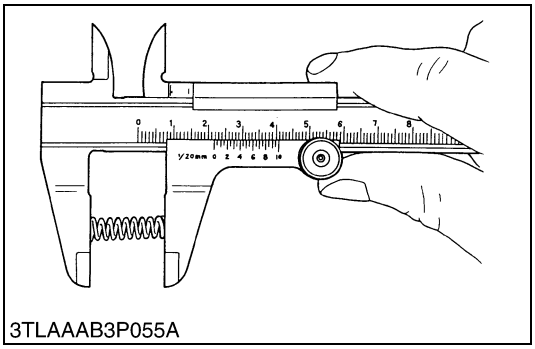
3TLAAAB3P055A

Free Length of the Shift Fork Spring

1. Measure free length of spring with vernier caliper.
2. If the free length is less than the allowable limit, replace.

Free length of the shift fork spring	Factory spec.	22 mm 0.866 in.
	Allowable limit	20 mm 0.787 in.

W1025587

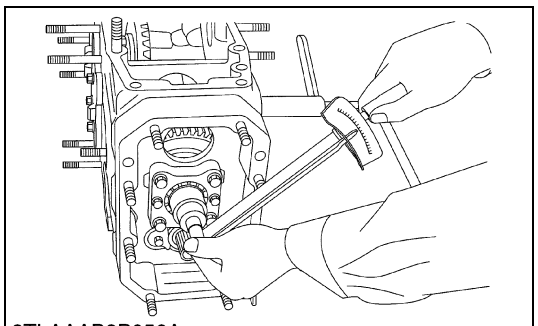
3TLAAAB3P056A

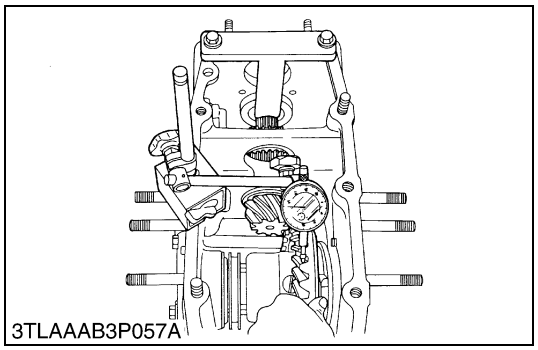
3TLAAAB3P057A

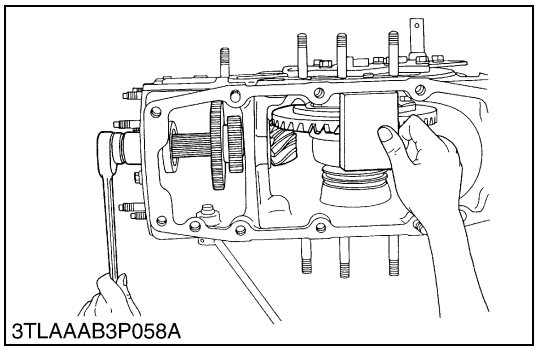
3TLAAAB3P058A

Spiral Bevel Pinion Turning Torque (with Differential Gear)

1. Grip the spiral bevel pinion nut with a torque wrench and measure the turning torque.
2. If the turning torque is not within the factory specifications, check the differential gear turning force, backlash and tooth contact again.

Differential gear rotating torque (Combined)	Factory spec.	3.92 to 6.37 N·m 0.40 to 0.65 ft-lbs 2.89 to 4.70 Kgf·m

W1025673

Backlash and Tooth Contact between Bevel Gear and 8T Spiral Bevel Pinion

1. Set the dial indicator (lever type) with its finger on the tooth surface of bevel gear.
2. Measure the backlash by fixing the 8T spiral bevel pinion and moving the bevel gear by hand.
3. If the backlash exceeds the factory specification, decrease the number of shims at right bearing case (right) and insert the removed shims to the left bearing case (left).
   If the backlash is less than the factory specification, decrease the number of shims at left bearing case (left) and insert the removed shims to the right bearing case (right).
4. Adjust the backlash properly by repeating the above procedures.

Backlash between spiral bevel gear and 8T spiral bevel pinion	Factory spec.	0.15 to 0.30 mm 0.0059 to 0.0118 in.

5. Apply red lead lightly over several teeth at three positions equally spaced on the bevel gear.
6. Turn the 8T spiral bevel pinion while pressing a piece of wood against the periphery of the bevel gear.
7. Check the tooth contact. If not correct, adjust according to the instructions below.

(Reference)

- Thickness of differential side shims :
  0.1 mm (0.004 in.) (Parts No. 37150-26170)
  0.2 mm (0.008 in.) (Parts No. 37150-26160)
  0.5 mm (0.020 in.) (Parts No. 37150-26180)
- Thickness of spiral bevel pinion shims :
  0.1 mm (0.004 in.) (Parts No. 34150-22630)
  0.2 mm (0.008 in.) (Parts No. 34150-22620)
  0.5 mm (0.020 in.) (Parts No. 37450-22610)

W10279260

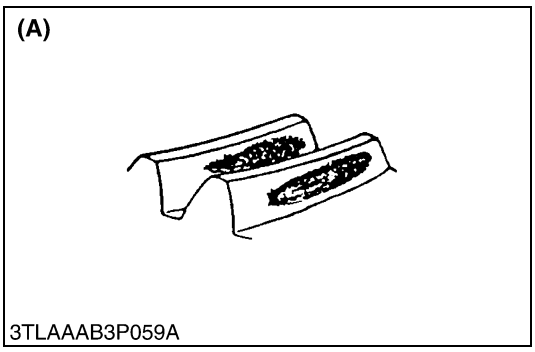

Proper Contact

More than 35 % red lead contact area on the gear tooth surface.

The center of tooth contact at 1/3 of the entire width from the small end.

(A) Correct Contact

W10187470

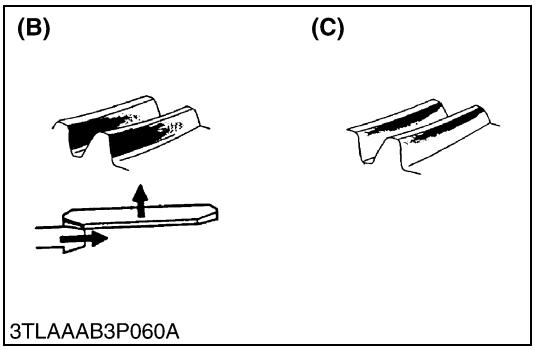

Heel Contact and Tip Contact

Replace the adjusting shim with thicker one to move the bevel pinion shaft forward.

Place the left side shim to the right to move the bevel gear rightward.

Repeat above until the correct tooth contact and backlash are achieved.

(B) Heel Contact **(C) Tip Contact**

W10189000

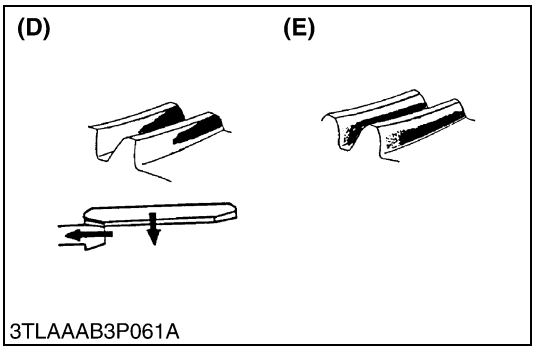

Toe Contact and Base Contact

Replace adjusting shim with thicker one to move the bevel pinion shaft forward.

Place the right side shim to the left to move the bevel gear leftward.

Repeat above until the correct tooth contact and backlash are achieved.

(D) Toe Contact **(E) Base Contact**

W10189730

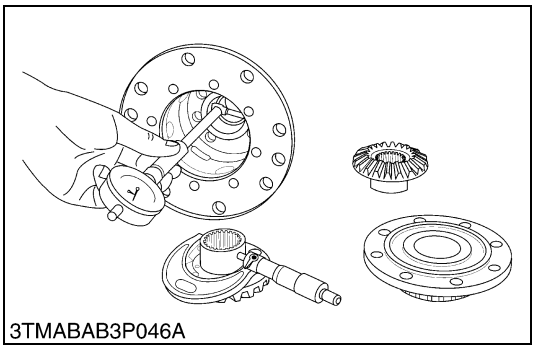

Clearance between Differential Case Bore (Differential Case Cover Bore) and Differential Side Gear Boss

1. Measure the bore I.D. of the differential case and differential case cover.
2. Measure the differential side gear boss O.D. and calculate the clearance.
3. If the clearance exceeds the allowable limit, replace them.

Clearance between differential case bore and differential side gear boss	Factory spec.	0.050 to 0.151 mm 0.00197 to 0.00594 in.
	Allowable limit	0.35 mm 0.0138 in.

Differential case bore I.D.	Factory spec.	40.500 to 40.562 mm 1.59449 to 1.59693 in.
Differential side gear boss O.D.	Factory spec.	40.411 to 40.450 mm 1.59098 to 1.59252 in.

Clearance between differential case cover bore and differential side gear boss	Factory spec.	0.090 to 0.169 mm 0.00354 to 0.00666 in.
	Allowable limit	0.35 mm 0.0138 in.

Differential case cover bore I.D.	Factory spec.	40.540 to 40.580mm 1.59606 to 1.59764 in.
Differential side gear boss O.D.	Factory spec.	40.411 to 40.450 mm 1.59098 to 1.59252 in.

W102840310

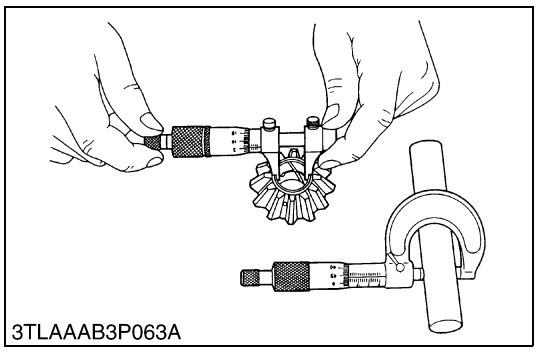
3TLAAAB3P063A

Clearance between Differential Pinion Shaft and Differential Pinion

1. Measure the differential pinion shaft O.D.
2. Measure the differential pinion I.D. and calculate the clearance.
3. If the clearance exceeds the allowable limit, replace them.

Clearance between differential pinion shaft and pinion	Factory spec.	0.080 to 0.122 mm 0.00315 to 0.00480 in.
	Allowable limit	0.30 mm 0.0118 in.

Differential pinion shaft O.D.	Factory spec.	19.959 to 19.980 mm 0.78579 to 0.78661 in.
Differential pinion boss I.D.	Factory spec.	20.060 to 20.081 mm 0.78976 to 0.79059 in.

W10287600

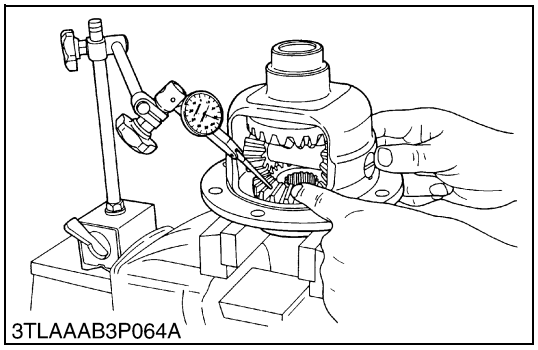
3TLAAAB3P064A

Backlash between Differential Pinion and Differential Side Gear

1. Secure the differential case in a vise.
2. Set a dial indicator (lever type) on the tooth of the differential side gear.
3. Hold the differential pinion and move the differential side gear to measure the backlash.
4. If the measurement exceeds the allowable limit, adjust with the differential side gear washer.

Backlash between differential pinion and differential side gear	Factory spec.	0.15 to 0.30 mm 0.0059 to 0.0118 in.
	Allowable limit	0.4 mm 0.016 in.

(Reference)

- Thickness of differential side gear washers :
  1.5 mm (0.059 in.) (Parts No. 31351-26470)
  1.6 mm (0.063 in.) (Parts No. 31351-26480)
  1.7 mm (0.067 in.) (Parts No. 31351-26490)
  1.8 mm (0.071 in.) (Parts No. 3A011-32760)
  2.0 mm (0.079 in.) (Parts No. 3A011-32780)

W10289200

https://truckmanualshub.com/

4 REAR AXLE

https://truckmanualshub.com/

MECHANISM

CONTENTS

1. STRUCTURE 4-M1

https://truckmanualshub.com/

1. STRUCTURE

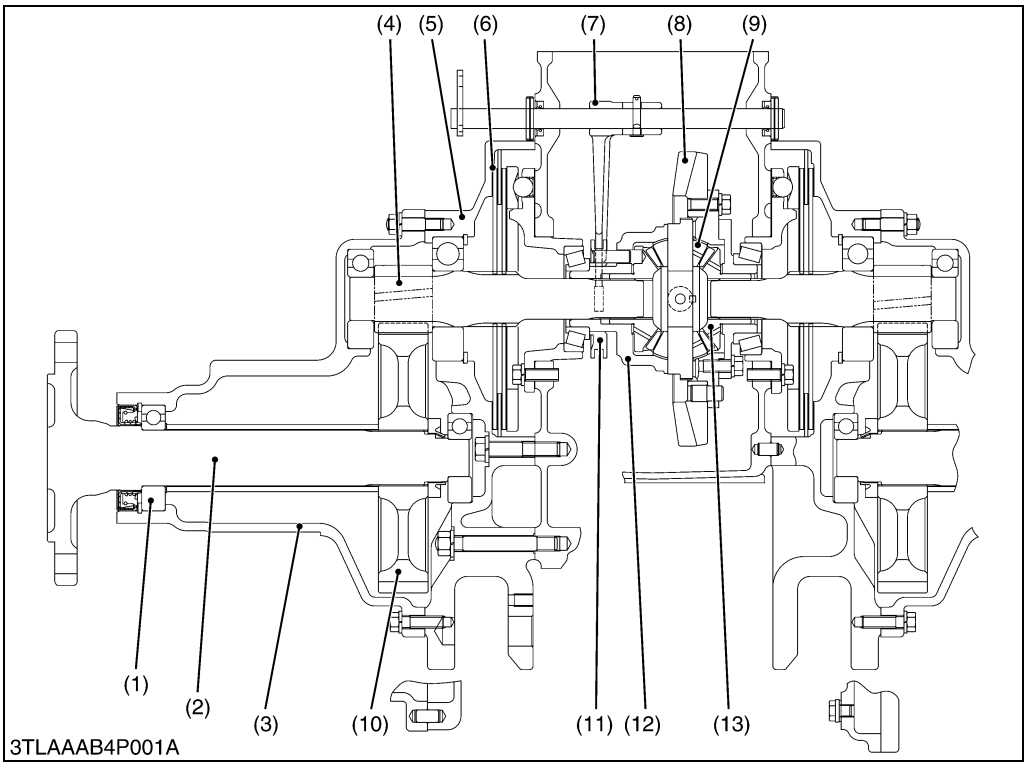

(1) Ball Bearing
(2) Rear Axle
(3) Rear Axle Case
(4) Differential Gear Shaft
(5) Brake Case
(6) Brake Disc
(7) Differential Lock Shift Fork
(8) 39T Bevel Gear
(9) Differential Pinion
(10) Final Gear
(11) Differential Lock Shifter
(12) Differential Case
(13) Differential Side Gear

W1012642

The final gears (10) are the final reduction mechanism which further reduces the speed of rotation. The direction of power transmitted is changed by the differential gear.

The rear axles (2) are the final transmission mechanisms which transmit the power from the transmission to the rear wheels. The rotation speed is reduced by the final gears (10).

The rear axles are the semi-floating type with the ball bearing (1) between the rear axle (2) and rear axle case (3), which support the rear wheel load besides transmitting power to the rear wheel. The rear axle also support the weight of the tractor.

https://truckmanualshub.com/

SERVICING

CONTENTS

1. TROUBLESHOOTING 4-S1
2. TIGHTENING TORQUES 4-S2
3. DISASSEMBLING AND SERVICING.....4-S3
   [1] PREPARATION 4-S3
   [2] DISASSEMBLING REAR AXLE.....4-S6
   [3] SERVICING 4-S7

https://truckmanualshub.com/

1. TROUBLESHOOTING

Symptom	Probable Cause	Solution	Reference Page
Excessive or Unusual Noise at All Time	Improper backlash between differential gear shaft and final gear	Replace	4-S6
	Bearing worn	Replace	4-S6
	Insufficient or improper type of transmission fluid used	Replenish or change	G-6
Noise while Turning	Differential gear shaft and final gear worn or damaged	Replace	4-S6

W10122140

2. TIGHTENING TORQUES

Tightening torques of screws, and nuts on the table below are especially specified.
(For general use screws and nuts : See page G-7.)

Item	N·m	kgf·m	ft-lbs
Rear wheel mounting screw and nut	197 to 226	20 to 23	145 to 166
ROPS mounting screw (M14, 9T)	167 to 196	17.0 to 20	123 to 144
ROPS fulcrum screw	118 to 137	12 to 14	87 to 101
Rear axle case mounting screw and nut	48.1 to 55.9	4.9 to 5.7	35.4 to 41.2
Rear axle case mounting stud bolt	24.5 to 31.4	2.5 to 3.2	18.1 to 23.1
Lock nut	196 to 245	20 to 25	145 to 181

W10127360

3. DISASSEMBLING AND SERVICING

[1] PREPARATION

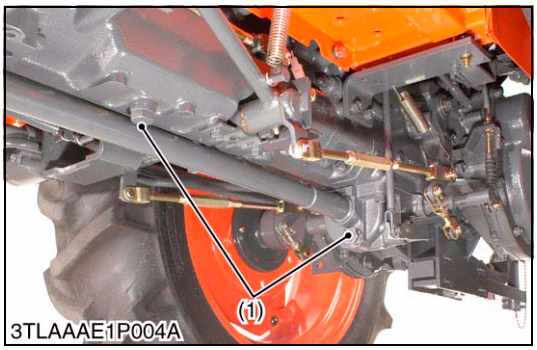

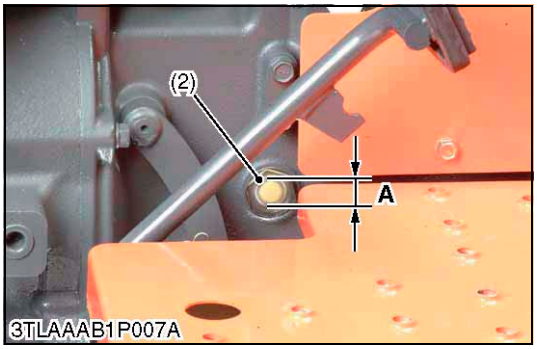

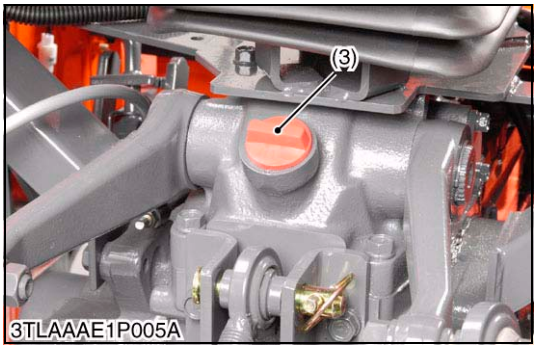

Draining the Transmission Fluid

1. Place an oil pan underneath the transmission case.
2. Remove the drain plugs (1) at the bottom of the transmission case.
3. Drain the transmission fluid.
4. Screw in the drain plugs (1).

(When reassembling)

- Full up new oil to the upper line of the gauge (2) from the filling port after removing the filling plug (3).
- After running the engine for a few minutes, stop it and check the fluid level again, if low, add oil to the prescribed level (**A**).

■ **IMPORTANT**

- **Use only multi-grade transmission fluid. Use of other fluids may damage the transmission or hydraulic system.**
- **Refer to "LUBRICANTS, FUEL AND COOLANT". (See page G-6.)**
- **Never work the tractor immediately after changing the transmission fluid. Keeping the engine at medium speed for a few minutes to prevent damage to the transmission.**
- **Do not mix different brands oil together.**

Transmission fluid	Capacity	27.5 L 7.3 U.S.qts 6.1 Imp.qts

(1) Drain Plug
(2) Gauge
(3) Filling Plug

A : Oil level is acceptable within this range.

W1014062

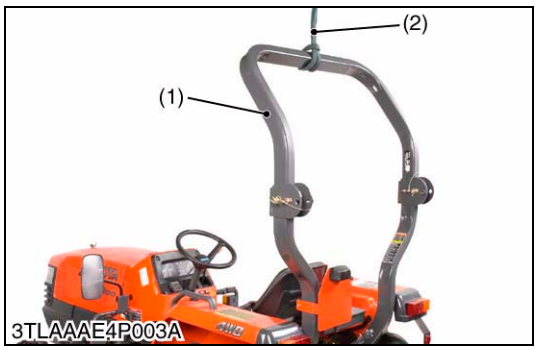

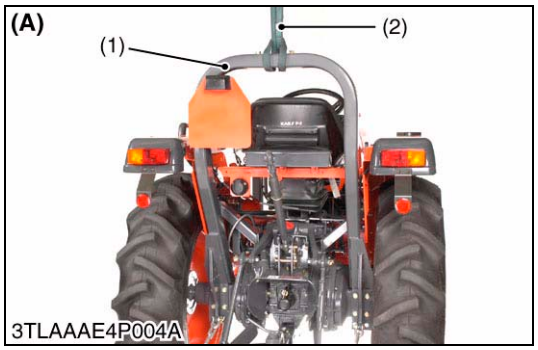

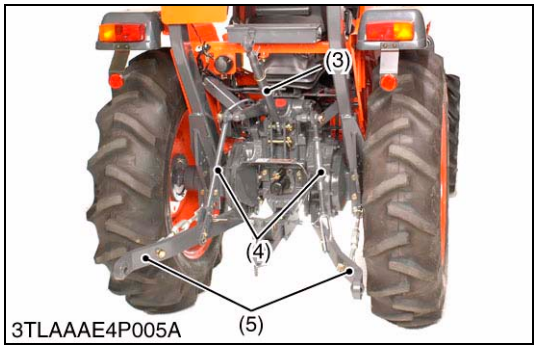

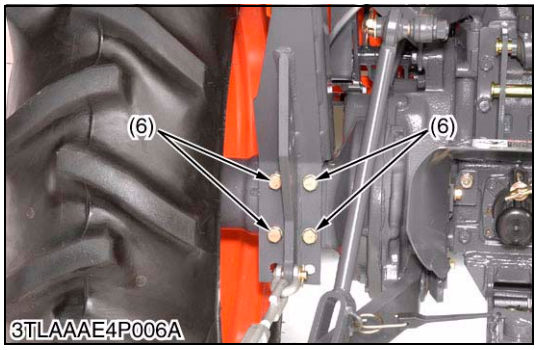

Three Point Linkage and ROPS

1. Secure ROPS (1) with safety strap (2).
2. Remove top link (3), lift rod (4) and lower link (5).
3. Unscrew ROPS mounting screws (6) (both sides), then remove ROPS.

(When reassembling)

Tightening torque	ROPS mounting screw	167 to 196 N·m 17.0 to 20.0 kgf·m 123 to 144 ft-lbs
	ROPS fulcrum screw	118 to 137 N·m 12 to 14 kgf·m 87 to 101 ft-lbs

(1) ROPS
(2) Safety Strap
(3) Top Link
(4) Lift Rod
(5) Lower Link
(6) ROPS Mounting Screws

(A) Center ROPS Type

W1014282

Rear Wheel and Fender

1. Place the disassembling stand under the transmission case.
2. Loosen and remove the rear wheel mounting screws and nuts.
3. Remove the rear wheel (2).
4. Remove the rear wheel fender (1).
5. Follow the same procedure as above for the other side.

(When reassembling)

Tightening torque	Rear wheel mounting screw and nut	197 to 226 N·m 20 to 23 kgf·m 145 to 166 ft-lbs

(1) Rear Wheel Fender
(2) Rear Wheel

W1014857

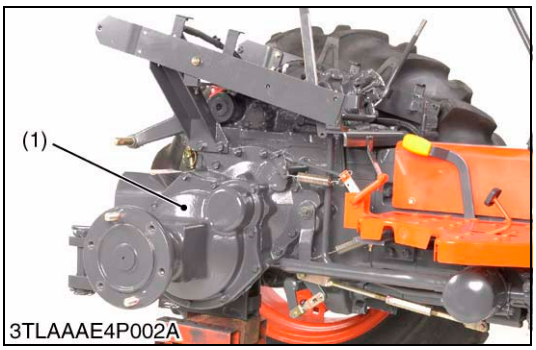

Rear Axle Case

1. Loosen and remove the rear axle case mounting screws and nuts.
2. Support the rear axle case (1) with the nylon lift strap and hoist.
3. Separate the rear axle case from brake case.
4. Follow the same procedure as above for the other side.

(When reassembling)

- Apply liquid gasket (Three Bond 1208D, 1141 or equivalent) to joint face of the rear axle case and brake case, after eliminating the water, oil and the old remaining liquid gasket.

Tightening torque	Rear axle case mounting screw and nut	48.1 to 55.9 N·m 4.9 to 5.7 kgf·m 35.4 to 41.2 ft-lbs
	Rear axle case mounting stud bolt	24.5 to 31.4 N·m 2.5 to 3.2 kgf·m 18.1 to 23.1 ft-lbs

(1) Rear Axle Case

W1015033

[2] DISASSEMBLING REAR AXLE

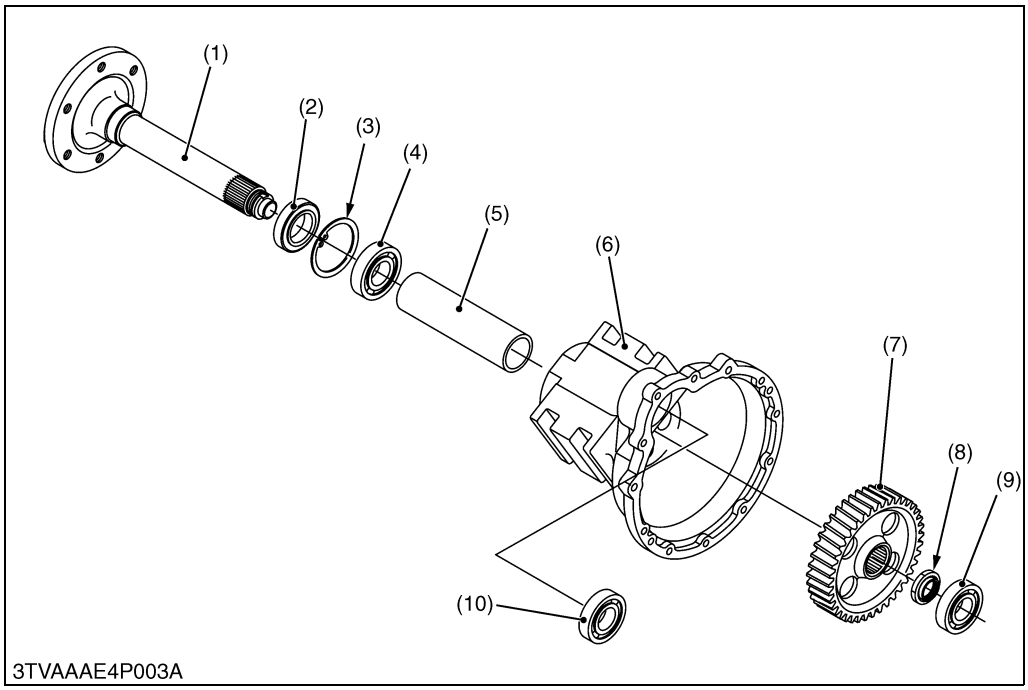

3TVAAAE4P003A

(1) Rear Axle
(2) Oil Seal
(3) Internal Snap Ring
(4) Ball Bearing
(5) Spacer
(6) Rear Axle Case
(7) Gear
(8) Lock Nut
(9) Ball Bearing
(10) Ball Bearing

W10115940

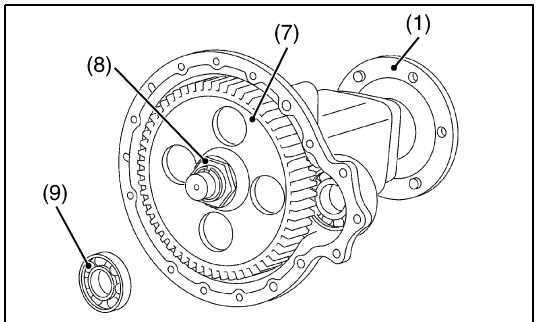

3TMABAB4P005B

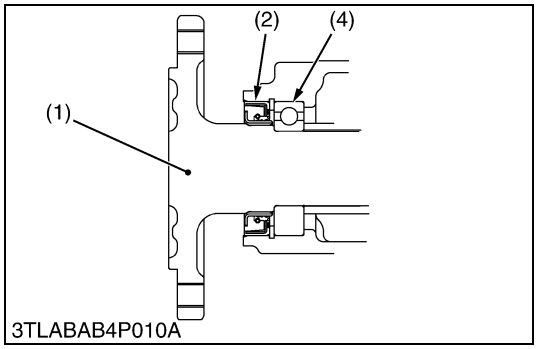

3TLABAB4P010A

1. Remove the ball bearing (9) with a puller.
2. Remove the stake of lock nut (8).
3. Secure the rear axle (1) in a vise and remove the lock nut.
4. Take out the gear (7) and spacer (5).
5. Tap out the rear axle (1).

(When reassembling)

- Apply grease to the oil seal (2) and install it.
- Replace the lock nut with new one, and after tightening it to specified torque, stake it firmly.
- Assemble the oil seal (2) in the correct direction. (See figure.)

Tightening torque	Lock nut	196 to 245 N·m 20 to 25 kgf·m 145 to 181 ft-lbs

W10116810

https://truckmanualshub.com/

[3] SERVICING

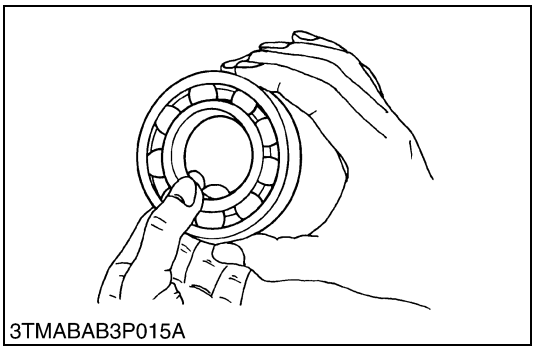
3TMABAB3P015A

Checking Bearing

1. Hold the inner, and push and pull the outer race in all directions to check for wear and roughness.
2. Apply transmission fluid to the bearing, and hold the inner race. Then, turn the outer race to check rotation.
3. If there is any defect, replace it.

W1015513

https://truckmanualshub.com/

5 BRAKES

https://truckmanualshub.com/

MECHANISM

CONTENTS

1. STRUCTURE 5-M1
2. OPERATION 5-M2

https://truckmanualshub.com/

1. STRUCTURE

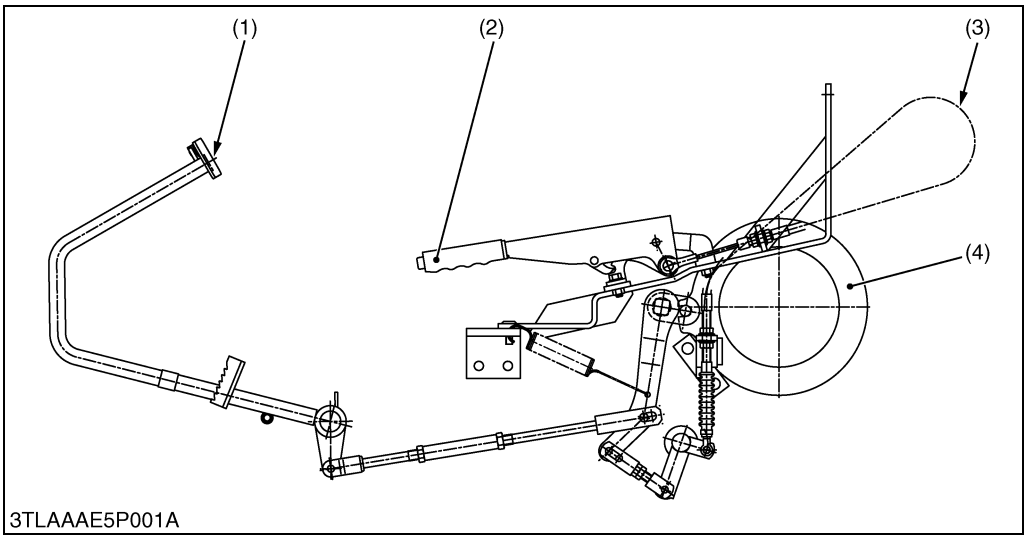

(1) Brake Pedal
(2) Parking Brake Lever
(3) Parking Brake Cable
(4) Cam Plate

W1012845

Independent mechanical wet disc brakes are used for the right and left traveling brakes. They are operated by the brake pedals through the mechanical linkages.

The parking brake is a mechanical type which is designed to actuate the traveling brakes through the linkage. Pulling the parking brake lever (2) results in the same state as that obtained when the brake pedals are pressed.

2. OPERATION

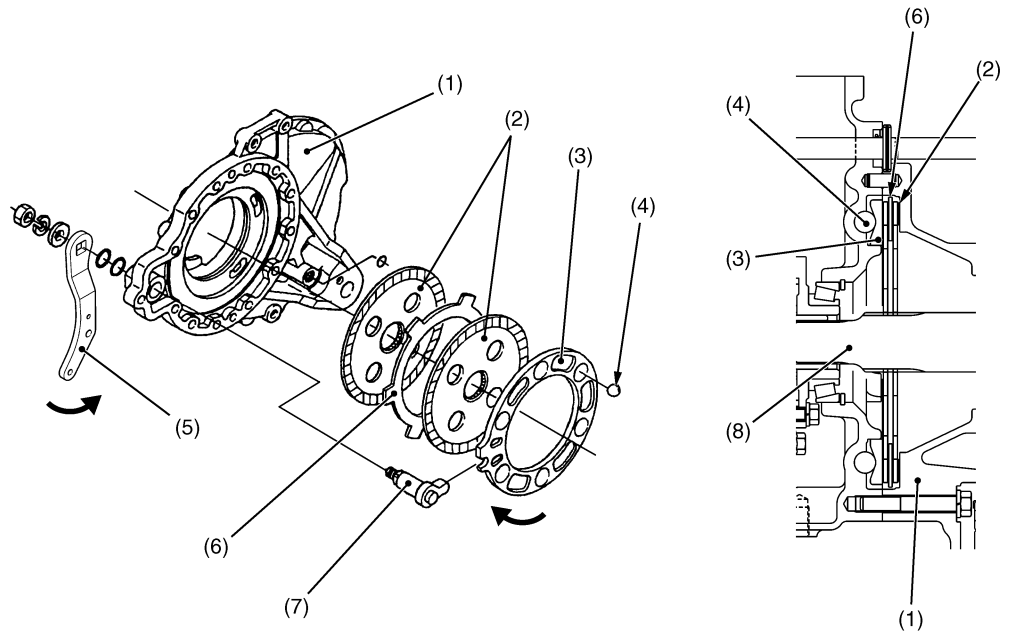

3TLAAAE5P002A

(1) Brake Case	(3) Cam Plate	(5) Brake Cam Lever	(7) Brake Cam
(2) Brake Disc	(4) Steel Ball	(6) Plate	(8) Brake Shaft

The brakes are provided on the power transmitting shafts (brake shafts (8)) through which power is transmitted to the final reduction system. The brakes are incorporated in the brake case (1) filled with transmission oil. They are designed to brake when the brake discs (2), spline-coupled and rotating with the brake shaft, are pressed against the brake case by cam plate (3) with the cam mechanism incorporating steel balls (4). For greater braking force, two brake discs are provided respectively, and the plate (6) fixed to the brake case are arranged between the brake discs.

■ **During Braking**

When the brake pedal is pressed, the force causes the brake cam lever (5) to move in the direction of the arrow through the brake rod. At the same time, the brake cam (7) spline-coupled with the brake cam lever also moves. Due to this force, cam plate (3) moves in the direction of arrow. Since the steel balls (4) are set in the grooves of differential case, cam plate (3) is pushed out against the brake discs (2), causing braking with the friction force created.

https://truckmanualshub.com/

SERVICING

CONTENTS

1. TROUBLESHOOTING 5-S1
2. SERVICING SPECIFICATIONS 5-S2
3. TIGHTENING TORQUES 5-S3
4. CHECKING, DISASSEMBLING AND SERVICING.....5-S4
   [1] CHECKING AND ADJUSTING 5-S4
   [2] PREPARATION 5-S5
      (1) Separating Rear Axle Case from Transmission Case 5-S5
   [3] DISASSEMBLING AND ASSEMBLING.....5-S8
   [4] SERVICING 5-S9

https://truckmanualshub.com/

1. TROUBLESHOOTING

Symptom	Probable Cause	Solution	Reference Page
Uneven Braking Force	Brake disc worn	Replace	5-S9
	Cam plate warped	Replace	5-S9
Brake Drags	Ball holes of cam plate for uneven wear	Replace	5-S9
	Brake pedal return spring weaken or broken	Replace	–
	Brake cam rested	Repair	–
Parking Brake Drags	Parking brake lever free travel too small	Adjust	5-S4
Poor Braking Force	Brake disc worn	Replace	5-S9
	Cam plate warped	Replace	5-S9
	Brake cam or lever damaged	Replace	5-S9
Poor Parking Braking Force	Parking brake lever free travel excessive	Adjust	5-S4

W10143220

2. SERVICING SPECIFICATIONS

Item		Factory Specification	Allowable Limit
Parking Brake Cable	Adjusting Dimension	125 to 130 mm 4.92 to 5.12 in.	–
Parking Brake Shaft to Bushing	Clearance	0.05 to 0.20 mm 0.002 to 0.008 in.	1.0 mm 0.039 in.
Parking Brake Shaft	O.D.	24.9 to 25.0 mm 0.980 to 0.984 in.	–
Parking Brake Bushing	I.D.	25.05 to 25.10 mm 0.986 to 0.9882 in.	–
Brake Pedal	Free Travel	20 to 30 mm 0.79 to 1.2 in.	–
	Right and Left (Difference)	Less than 5 mm 0.20 in.	
Brake Pedal Shaft to Bushing	Clearance	0.020 to 0.153 mm 0.00079 to 0.00602 in.	1.0 mm 0.039 in.
Brake Pedal Shaft	O.D.	24.9 to 25.0 mm 0.980 to 0.984 in.	–
Brake Pedal Bushing	I.D.	25.020 to 25.053 mm 0.98504 to 0.98634 in.	–
Brake Pedal Shaft to Support Bushing	Clearance	0.05 to 0.20 mm 0.0020 to 0.0079 in.	1.0 mm 0.039 in.
Support Bushing	I.D.	25.05 to 25.10 mm 0.9862 to 0.9882 in.	–
Cam Plate	Flatness	–	0.3 mm 0.012 in.
Cam Plate and Ball	Height	20.9 to 21.1 mm 0.823 to 0.831 in.	20.5 mm 0.8071 in.
Brake Disc	Thickness	4.6 to 4.8 mm 0.181 to 0.189 in.	4.2 mm 0.165 in.
Plate	Thickness	2.54 to 2.66 mm 0.1000 to 0.1047 in.	2.1 mm 0.0827 in.

W10138740

https://truckmanualshub.com/

3. TIGHTENING TORQUES

Tightening torques of screws, and nuts on the table below are especially specified.
(For general use screws, bolts and nuts : See page G-7.)

Item	N·m	kgf·m	ft-lbs
Rear wheel mounting screw and nut	197 to 226	20 to 23	145 to 166
ROPS mounting screw	167 to 196	17.0 to 20.0	123 to 144
Rear axle case mounting stud bolt	24.5 to 31.4	2.5 to 3.2	18.1 to 23.1
Brake case mounting stud bolt	34.3 to 49.0	3.5 to 5.0	25.3 to 36.1
Brake cam mounting nut	62.8 to 72.5	6.4 to 7.4	46.3 to 53.5

W10127360

4. CHECKING, DISASSEMBLING AND SERVICING

[1] CHECKING AND ADJUSTING

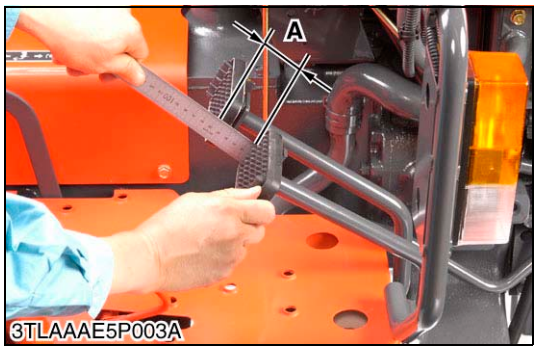

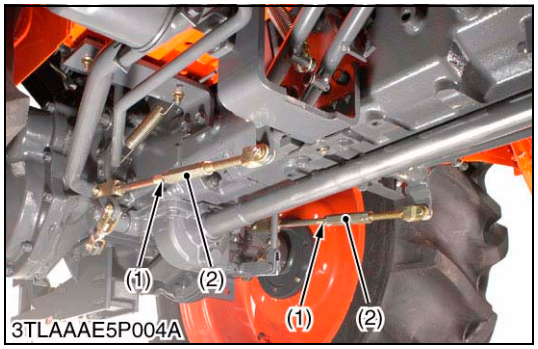

Brake Pedal Free Travel

CAUTION

- **Stop the engine and remove the key, then chock the wheel before checking brake pedals.**

1. Release the parking brake.
2. Slightly depress the brake pedals and measure free travel (**A**) at top of pedal stroke.
3. If the measurement is not within the factory specifications, loosen the lock nut (1) and turn the turnbuckle (2) to adjust it within the factory specifications.

Brake pedal free travel (**A**)	Factory spec.	20 to 30 mm 0.79 to 1.2 in.

■ **IMPORTANT**

- **Keep the free travel in the right and left brake pedals equal.**

■ **NOTE**

- **The difference between the right and left pedal free travels must be less than 5 mm (0.20 in.)**
- **After checking brake pedal free travel, be sure to engage the parking brake lock fully and check to see that the brake pedals are securely locked.**

(1) Lock Nut
(2) Turnbuckle

A : Free Travel

W1014038

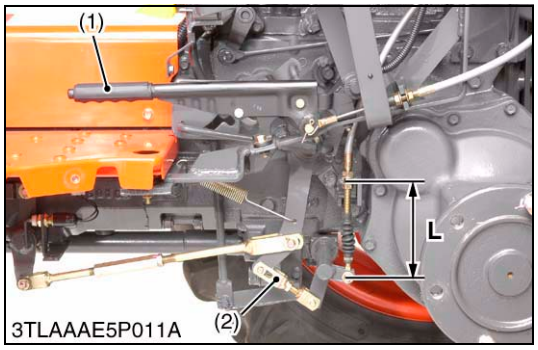

Parking Brake Cable

CAUTION

- **Stop the engine and remove the key, then chock the wheel before checking brake pedals.**

1. Check and adjust brake pedals as shown above.
2. Release parking brake lever (1). Confirm that there is the same free play in right and left parking brake links (2).
   If there is no free play, adjust parking brake links (2) so as to have the same free play.
3. Set parking brake lever at first notch. Maker sure that there is no free play in parking brake links (both sides).
4. Adjust parking brake cable if there is free play in parking brake links (2).

(Reference)

Parking brake cable adjusting dimension (**L**)	Factory spec.	125 to 130 mm 4.92 to 5.12 in.

(1) Parking Brake Lever
(2) Parking Brake Links

W1021507

[2] PREPARATION

(1) Separating Rear Axle Case from Transmission Case

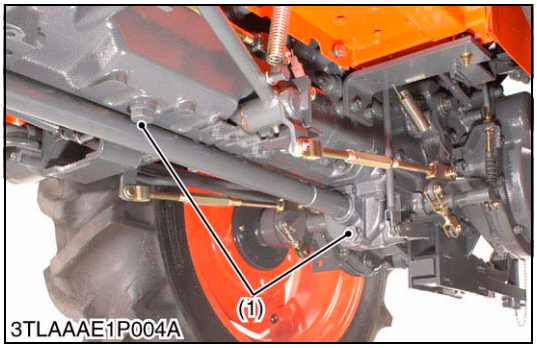

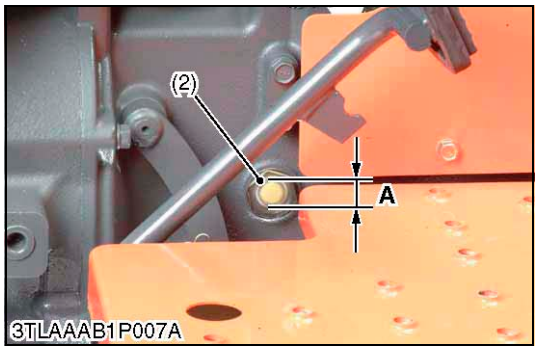

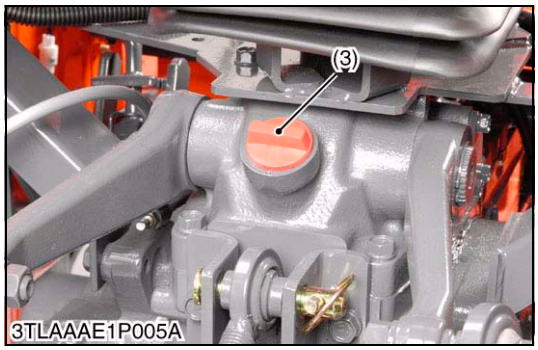

Draining the Transmission Fluid

1. Place an oil pan underneath the transmission case.
2. Remove the drain plugs (1) at the bottom of the transmission case.
3. Drain the transmission fluid.
4. Screw in the drain plugs (1).

(When reassembling)

- Full up new oil to the upper line of the gauge (2) from the filling port after removing the filling plug (3).
- After running the engine for a few minutes, stop it and check the fluid level again, if low, add oil to the prescribed level (**A**).

■ **IMPORTANT**

- **Use only multi-grade transmission fluid. Use of other fluids may damage the transmission or hydraulic system.**
- **Refer to "LUBRICANTS, FUEL AND COOLANT". (See page G-6.)**
- **Never work the tractor immediately after changing the transmission fluid. Keeping the engine at medium speed for a few minutes to prevent damage to the transmission.**
- **Do not mix different brands oil together.**

Transmission fluid	Capacity	27.5 L 7.3 U.S.qts 6.1 Imp.qts

(1) Drain Plug
(2) Gauge
(3) Filling Plug

A : Oil level is acceptable within this range.

W1062402

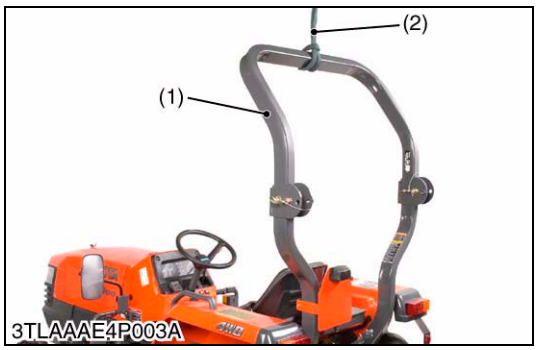

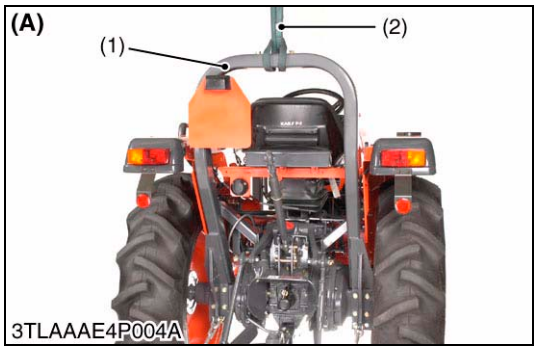

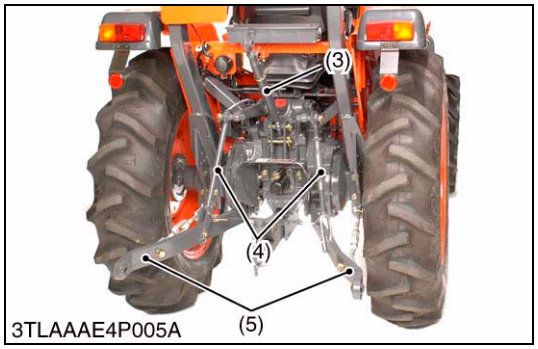

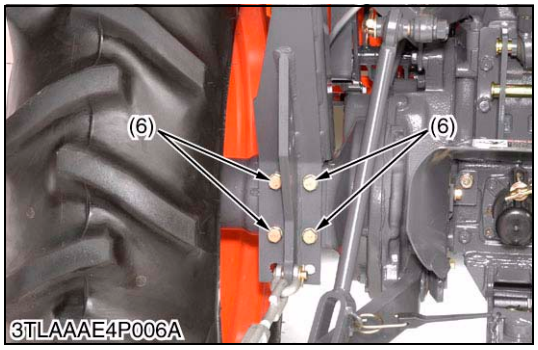

Three Point Linkage and ROPS

1. Secure ROPS (1) with safety strap (2).
2. Remove top link (3), lift rod (4) and lower link (5).
3. Unscrew ROPS mounting screws (6) (both sides), then remove ROPS.

(When reassembling)

Tightening torque	ROPS mounting screw	167 to 196 N·m 17.0 to 20.0 kgf·m 123 to 144 ft-lbs
	ROPS fulcrum screw	118 to 137 N·m 12 to 14 kgf·m 87 to 101 ft-lbs

(1) ROPS
(2) Safety Strap
(3) Top Link
(4) Lift Rod
(5) Lower Link
(6) ROPS Mounting Screws

(A) Center ROPS Type

W1022164

Rear Wheel and Rear Fender

1. Disconnect the battery negative cable.
2. Place the disassembling stand under the transmission case.
3. Loosen and remove the rear wheel mounting screws and nuts.
4. Remove the rear wheel (3) and rear fender (1).
5. Remove the grip (2).

(When reassembling)

Tightening torque	Rear wheel mounting screw and nut	197 to 226 N·m 20 to 23 kgf·m 145 to 166 ft-lbs

(1) Rear Fender
(2) Grip
(3) Rear Wheel

W1014678

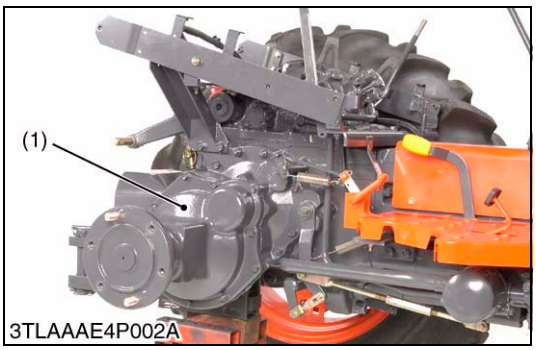

Rear Axle Case

1. Loosen and remove the rear axle case mounting screws and nuts.
2. Support the rear axle case (1) with the nylon lift strap and hoist.
3. Separate the rear axle case from brake case.
4. Follow the same procedure as above for the other side.

(When reassembling)

- Apply liquid gasket (Three Bond 1208D, 1141 or equivalent) to joint face of the rear axle case and brake case, after eliminating the water, oil and the old remaining liquid gasket.

Tightening torque	Rear axle case mounting screw and nut	48.1 to 55.9 N·m 4.9 to 5.7 kgf·m 35.4 to 41.2 ft-lbs
	Rear axle case mounting stud bolt	24.5 to 31.4 N·m 2.5 to 3.2 kgf·m 18.1 to 23.1 ft-lbs

(1) Rear Axle Case

W1014856

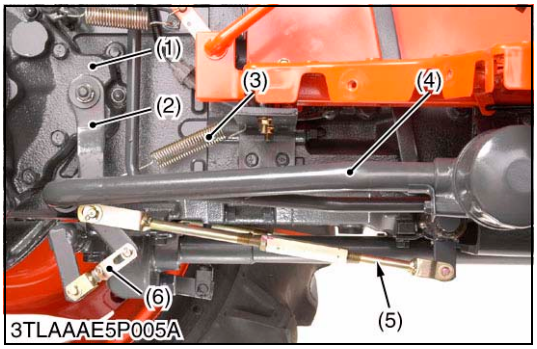

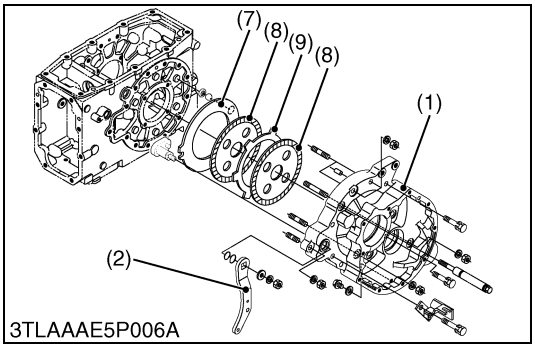

Brake Case

1. Remove brake cam lever spring (3).
2. Remove suction pipe (4).
3. Remove brake rod (5).
4. Remove parking brake link (6).
5. Loosen and remove brake case mounting screw and nuts.
6. Separate the brake case (1), tapping the brake cam lever (2).

(When reassembling)

- Apply grease to the brake ball seats. (Do not grease excessively.)
- Apply liquid gasket (Three Bond 1208D, 1141 or equivalent) to joint face of the brake case and transmission case, after eliminating the water, oil and the old remaining liquid gasket.
- Before installing the brake case to the transmission case, install the cam plate around the four protrusions on the differential bearing case.
- Apply liquid lock (Three Bond 1324 or equivalent) to the stud bolts.

Tightening torque	Brake case mounting stud bolt	34.3 to 49.0 N·m 3.5 to 5.0 kgf·m 25.3 to 36.1 ft-lbs

(1) Brake Case
(2) Brake Cam Lever
(3) Brake Cam Lever Spring
(4) Suction Pipe
(5) Brake Rod
(6) Parking Brake Link
(7) Cam Plate
(8) Brake Disc
(9) Plate

W1015066

[3] DISASSEMBLING AND ASSEMBLING

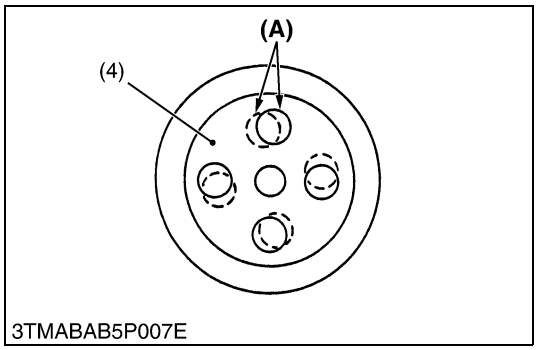

Brake Case

■ **It is possible to disassemble as shown in the figure below.**

(When reassembling)

- Place the brake discs (4) so that the hole **(A)** of the second disc should be overlapped 50 % or more.

W1017134

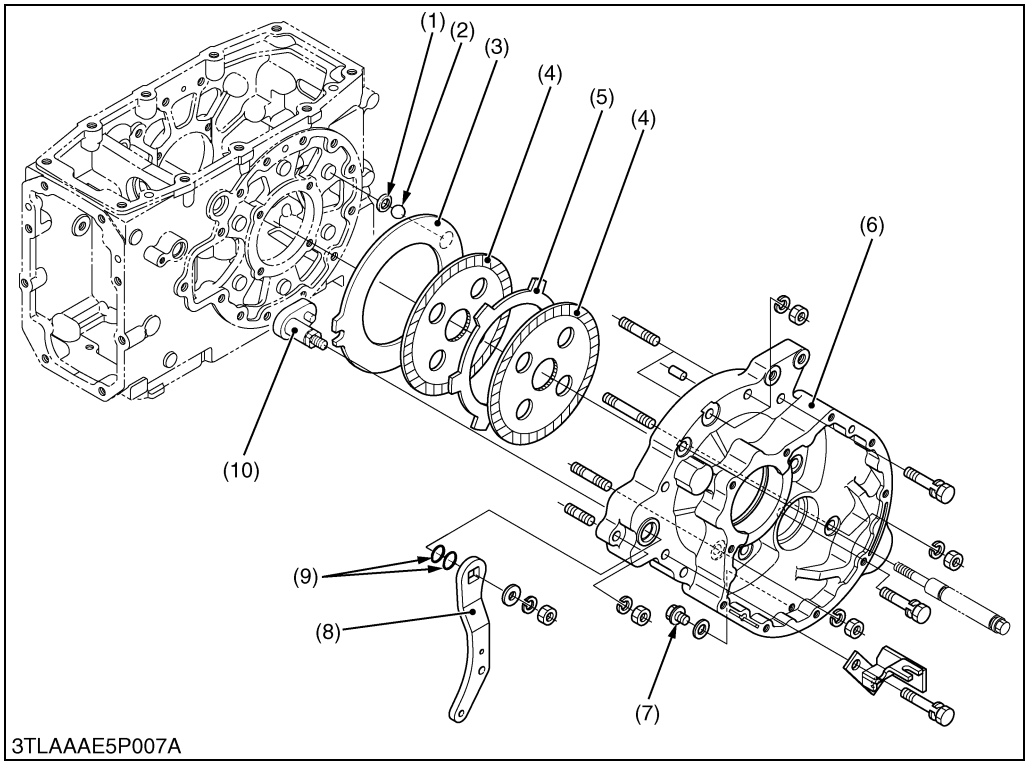

(1) Ball Seat
(2) Ball
(3) Cam Plate
(4) Brake Disc
(5) Plate
(6) Brake Case
(7) Drain Plug
(8) Brake Cam
(9) O-rings
(10) Brake Cam

W1012974

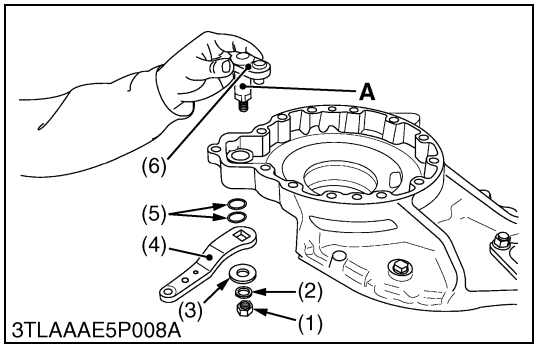

Brake Cam

1. Remove the nut (1) on the brake cam (6).
2. Remove the brake cam (6) and brake cam lever (4).

(When reassembling)

- Apply grease to the O-ring (5) and take care not to damage them.
- Apply small amount of grease to the journal **A** to prevent rust problem that may lead to seizure.

Tightening torque	Brake cam mounting nut	62.8 to 72.5 N·m 6.4 to 7.4 kgf·m 46.3 to 53.5 ft-lbs

(1) Nut
(2) Spring Washer
(3) Plain Washer
(4) Brake Cam Lever
(5) O-rings
(6) Brake Cam

W1017712

https://truckmanualshub.com/

[4] SERVICING

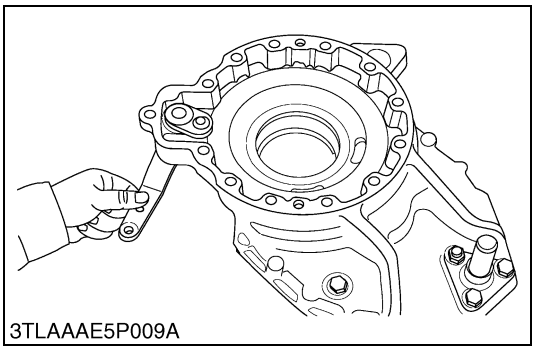
3TLAAAE5P009A

Brake Cam Lever Movement

1. Move the brake cam lever by hand to check the movement.
2. If the movement is heavy, clean up the brake cam with sandpaper.

W10144750

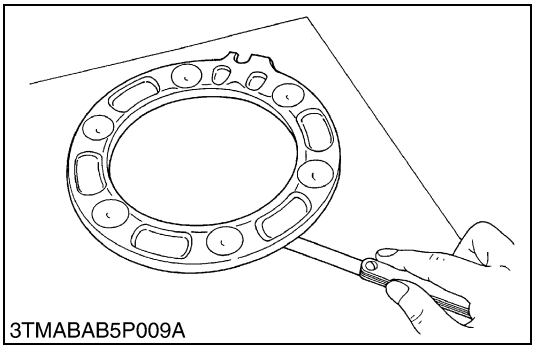
3TMABAB5P009A

Cam Plate Flatness

1. Place the cam plate on the surface plate.
2. Use a feeler gauge of 0.3 mm (0.012 in.) thick for judgement of the cam plate flatness. Measure the flatness diagonally at more than four locations.
3. If the measurement is above the allowable limit, replace it.

Cam Plate Flatness	Allowable limit	0.3 mm 0.012 in.

W10145650

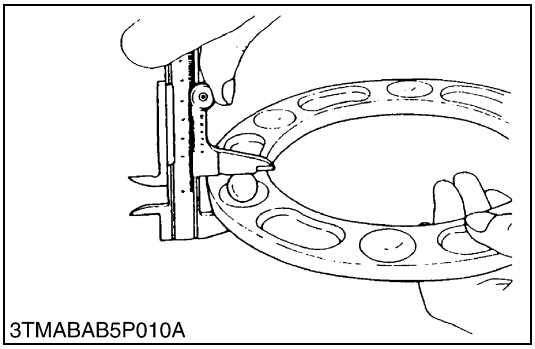
3TMABAB5P010A

Height of Brake Cam Plate and Ball

1. Measure the dimensions of the brake cam plate with the ball installed.
2. If the measurement is less than the allowable limit, replace the cam plate and balls.
3. Inspect the ball holes of cam plate for uneven wear. If uneven wear is found, replace it.

Height of brake cam plate and ball	Factory spec.	20.9 to 21.1 mm 0.823 to 0.831 in.
	Allowable limit	20.5 mm 0.807 in.

W10147220

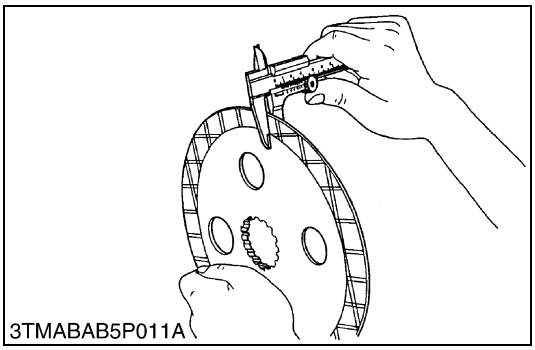
3TMABAB5P011A

Brake Disc Wear

1. Measure the brake disc thickness with vernier calipers.
2. If the measurement is less than the allowable limit, replace it.

Brake disc thickness	Factory spec.	4.6 to 4.8 mm 0.181 to 0.189 in.
	Allowable limit	4.2 mm 0.165 in.

W10148530

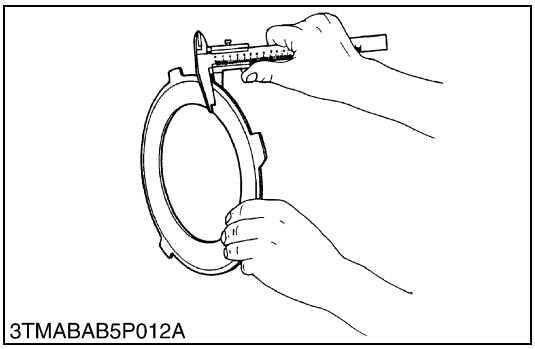
3TMABAB5P012A

Plate Wear

1. Measure the plate thickness with vernier calipers.
2. If the measurement is less than the allowable limit, replace it.

Plate thickness	Factory spec.	2.54 to 2.66 mm 0.1000 to 0.1047 in.
	Allowable limit	2.1 mm 0.0827 in.

W10149690

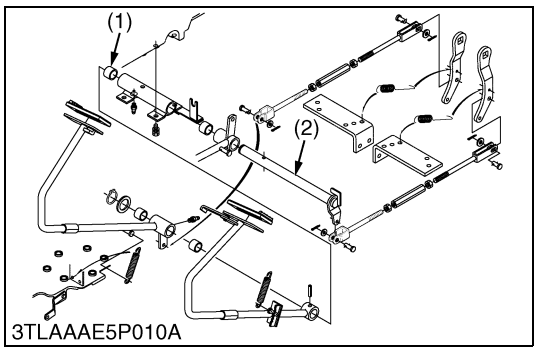

Clearance between Parking Brake Shaft and Bushing

1. Measure the parking brake shaft O.D. with an outside micrometer.
2. Measure the parking brake bushing I.D. with a cylinder gauge.
3. Calculate the clearance.
4. If the clearance exceeds the allowable limit, replace the bushing.

Clearance between parking brake shaft and parking brake bushing	Factory spec.	0.05 to 0.20 mm 0.002 to 0.008 in.
	Allowable limit	1.0 mm 0.039 in.

Parking brake shaft O.D.	Factory spec.	24.9 to 25.0 mm 0.980 to 0.984 in.
Parking brake bushing I.D.	Factory spec.	25.05 to 25.10 mm 0.986 to 0.9882 in.

(1) Parking Brake Bushing (2) Parking Brake Shaft

W1020913

https://truckmanualshub.com/

6 FRONT AXLE

https://truckmanualshub.com/

MECHANISM

CONTENTS

1. STRUCTURE 6-M1

https://truckmanualshub.com/

1. STRUCTURE

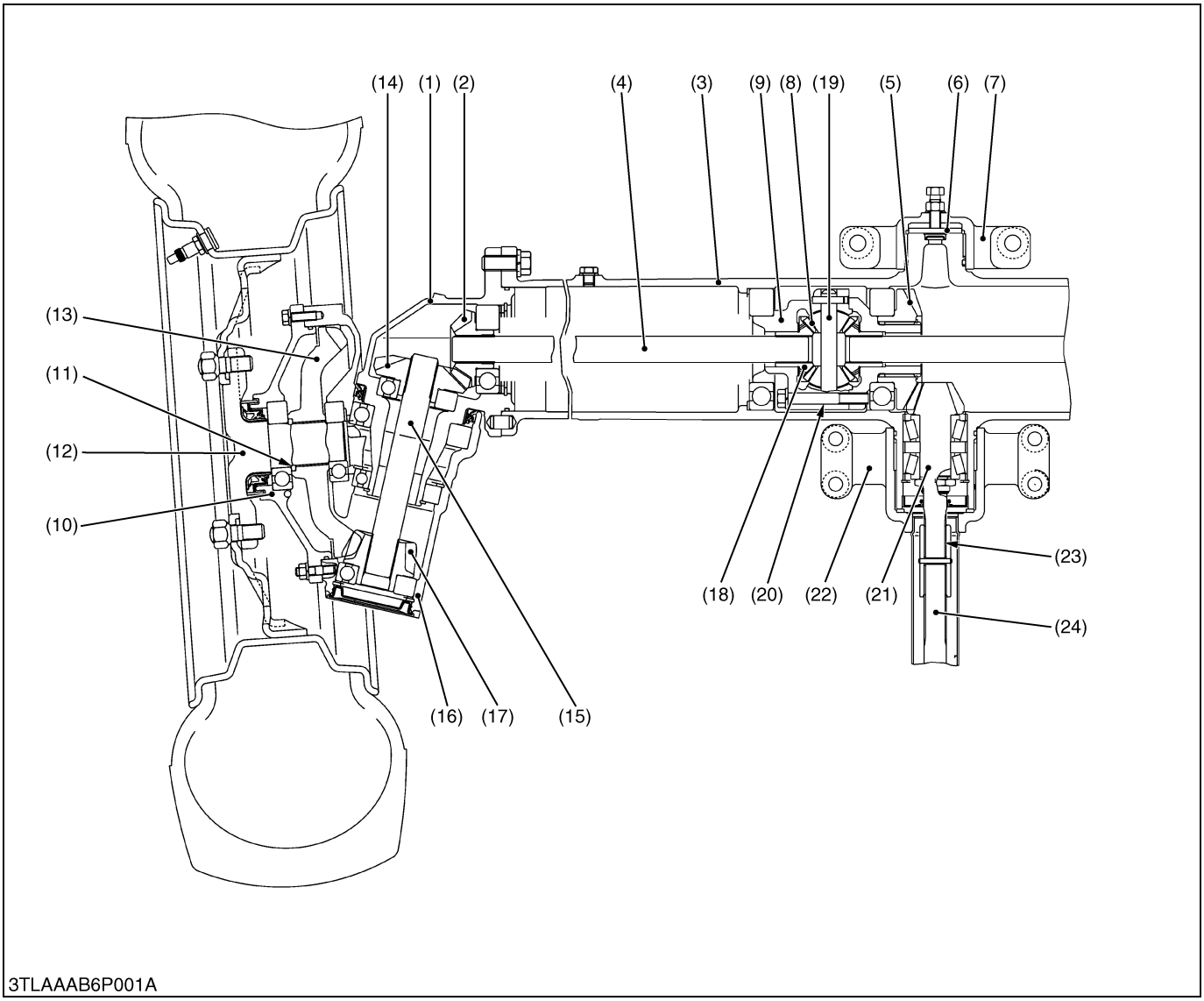

(1) Bevel Gear Case
(2) Bevel Gear
(3) Front Axle Case
(4) Differential Yoke Shaft
(5) Spiral Bevel Gear
(6) Collar
(7) Front Axle Bracket, Front
(8) Differential Pinion
(9) Differential Case
(10) Axle Flange
(11) Collar
(12) Axle
(13) Bevel Gear
(14) Bevel Gear
(15) Bevel Gear Shaft
(16) Front Gear Case
(17) Bevel Gear
(18) Differential Side Gear
(19) Pinion Shaft
(20) Differential Assembly
(21) Spiral Bevel Pinion Shaft
(22) Front Axle Bracket, Rear
(23) Coupling
(24) Propeller Shaft

The front axle is constructed as shown above. Power is transmitted from the transmission through the propeller shaft (24) and to the spiral bevel pinion shaft (21), then to the spiral bevel gear (5) after that to the differential gear.

The power through the differential is transmitted to the differential yoke shaft (4), and to the bevel gear shaft (15) in the bevel gear case (1).

The revolutions are greatly reduced by the bevel gears (17), (13), then the power is transmitted to the axle (12).

The differential system allows each wheel to rotate at a different speed to make turning easier.

https://truckmanualshub.com/

SERVICING

CONTENTS

1. TROUBLESHOOTING 6-S1
2. SERVICING SPECIFICATIONS 6-S2
3. TIGHTENING TORQUES 6-S5
4. CHECKING, DISASSEMBLING AND SERVICING.....6-S6
   [1] CHECKING AND ADJUSTING 6-S6
   [2] PREPARATION 6-S8
      (1) Separating Front Axle 6-S8
   [3] DISASSEMBLING AND ASSEMBLING.....6-S10
   [4] SERVICING 6-S14

https://truckmanualshub.com/

1. TROUBLESHOOTING

Symptom	Probable Cause	Solution	Reference Page
Front Wheels Wander to Right or Left	Tire pressure uneven	Adjust	G-43
	Improper toe-in adjustment (improper alignment)	Adjust	6-S6
	Clearance between front axle case boss and front axle bracket (front, rear) bushing excessive	Replace	6-S18
	Front axle rocking force too small	Adjust	6-S7
	Front wheel sway excessive	Replace	6-S6
	Tie-rod end loose	Tighten	6-S9
	Air sucked in power steering circuit	Bleed	–
Front Wheels Can Not Be Driven	Propeller shaft broken	Replace	6-S8
	Front wheel drive gears in transmission broken	Replace	3-S24
	Front differential gear broken	Replace	6-S13
	Shift lever broken	Replace	3-S26
	Coupling displaced	Reassemble	–
Noise	Gear backlash excessive	Adjust or replace	6-S16, S17
	Oil insufficient	Replenish	6-S8
	Bearings damaged or broken	Replace	–
	Gears damaged or broken	Replace	–
	Spiral bevel pinion shaft turning force improper	Adjust	6-S15

W10143220

2. SERVICING SPECIFICATIONS

Item		Factory Specification	Allowable Limit
Front Wheel Alignment	Toe-in	2 to 8 mm 0.08 to 0.32 in.	–
Front Wheel	Axial Sway	Less than 5 mm 0.20 in.	–
Front Axle	Rocking Force	49.0 to 117.7 N 5.0 to 12.0 kgf 11.0 to 26.5 lbs	–
Front Axle Case Boss (Front) to Bracket Bushing	Clearance	0.025 to 0.160 mm 0.00098 to 0.00630 in.	0.35 mm 0.0138 in.
Front Axle Case Boss (Front)	O.D.	49.950 to 49.975 mm 1.96653 to 1.96752 in.	–
Bushing	I.D.	50.000 to 50.110 mm 1.96850 to 1.97283 in.	–
Front Axle Case Boss (Rear) to Bracket Bushing	Clearance	0.025 to 0.190 mm 0.00098 to 0.00748 in.	0.35 mm 0.0138 in.
Front Axle Case Boss (Rear)	O.D.	70.000 to 70.035 mm 2.75590 to 2.75728 in.	–
Bushing	I.D.	70.060 to 70.190 mm 2.75826 to 2.76338 in.	–
Differential Case, Differential Case Cover to Differential Side Gear	Clearance	0.050 to 0.151 mm 0.00197 to 0.00594 in.	0.35 mm 0.0138 in.
Differential Case	I.D.	32.000 to 32.064 mm 1.25984 to 1.26228 in.	–
Differential Case Cover	I.D.	32.000 to 32.025 mm 1.25984 to 1.26083 in.	–
Differential Side Gear	O.D.	31.911 to 31.950 mm 1.25634 to 1.25787 in.	–
Pinion Shaft to Differential Pinion	Clearance	0.064 to 0.100 mm 0.00252 to 0.00394 in.	0.25 mm 0.0096 in.
Pinion Shaft	O.D.	13.950 to 13.968 mm 0.54921 to 0.54992 in.	–
Differential Pinion	I.D.	14.032 to 14.050 mm 0.55244 to 0.55315 in.	–

W1013973

(Continued)

Item		Factory Specification	Allowable Limit
Differential Pinion to Differential Side Gear	Backlash	0.1 to 0.3 mm 0.004 to 0.012 in.	–
Shim	Thickness	0.4 mm 0.016 in.	–
		0.6 mm 0.024 in.	–
		0.8 mm 0.031 in.	–
		1.0 mm 0.039 in.	–
		1.2 mm 0.047 in.	–
Spiral Bevel Pinion Shaft (Pinion Shaft Only)	Turning Force	98.1 to 117.7 N 10 to 12 kgf 22.0 to 26.5 lbs	–
	Turning Torque	0.98 to 1.18 N·m 0.1 to 0.12 kgf·m 0.72 to 0.89 ft-lbs	–
Spiral Bevel Pinion Shaft to Spiral Bevel Gear	Backlash	0.1 to 0.3 mm 0.004 to 0.012 in.	–
11T Bevel Gear to 16T Bevel Gear	Backlash	0.15 to 0.35 mm 0.0059 to 0.0138 in.	–
Shim	Thickness	0.8 mm 0.031 in.	–
		1.0 mm 0.039 in.	–
		1.2 mm 0.047 in.	–

W1013874

(Continued)

Item		Factory Specification	Allowable Limit
11T Bevel Gear to 42T Bevel Gear	Backlash	0.15 to 0.35 mm 0.0059 to 0.0138 in.	–
Shim	Thickness	1.0 mm 0.039 in.	–
		1.2 mm 0.047 in.	–
		1.4 mm 0.055 in.	–
		1.6 mm 0.063 in.	–
		1.8 mm 0.071 in.	–
		2.0 mm 0.079 in.	–
		2.2 mm 0.087 in.	–

W1013874

https://truckmanualshub.com/

3. TIGHTENING TORQUES

Tightening torques of screws, bolts and nuts on the table below are especially specified.
(For general use screws, bolts and nuts : See page G-7.)

Item	N·m	kgf·m	ft-lbs
Tie-rod end nut	39.2 to 44.1	4.0 to 4.5	28.9 to 32.5
Front axle shaft bracket (front) mounting screw	240 to 260	24 to 26	173 to 188
Front axle shaft bracket (rear) mounting screw	77.4 to 90.2	7.9 to 9.2	57.2 to 66.5
Front wheel mounting lug nut	137.3	14.0	101.3
Bevel gear case mounting screw	123.5 to 147.0	12.6 to 15.0	91.2 to 108.4
Axle flange mounting screw and nut	23.6 to 27.4	2.4 to 2.8	17.4 to 20.2
Axle flange mounting stud bolt	11.8 to 15.7	1.2 to 1.6	8.7 to 11.5
Differential case cover mounting screw	48.1 to 55.9	4.9 to 5.7	35.4 to 41.2

W1012736

4. CHECKING, DISASSEMBLING AND SERVICING

[1] CHECKING AND ADJUSTING

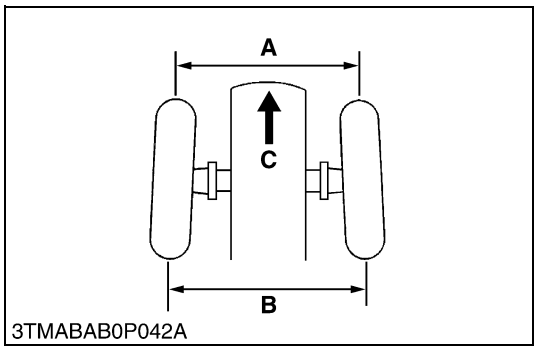

3TMABAB0P042A

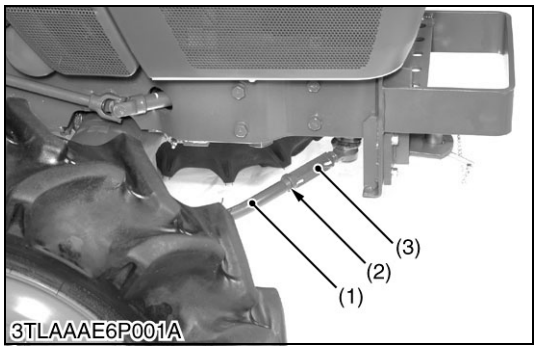

3TLAAAE6P001A

Toe-in

1. Park the tractor on flat ground.
2. Inflate the tires to the specified pressure.
3. Turn steering wheel so front wheels are in the straight ahead position.
4. Lower the implement, lock the parking brake and stop the engine.
5. Measure distance between tire beads at front of tire, hub height.
6. Measure distance between tire beads at rear of tire, hub height.
7. Front distance should be 2 to 8 mm (0.08 to 0.32 in.) less than rear distance.
8. If the measurement is not within the factory specifications, adjust by changing the tie-rod length.

Toe-in (**(B)** - **(A)**)	Factory spec.	2 to 8 mm 0.08 to 0.32 in.

■ **Adjusting**

1. Loosen the tie-rod lock nut (2) and turn the turnbuckle (3) to adjust the tie-lock rod length until the proper toe-in measurement is obtained.
2. Retighten the tie-rod lock nut (2).

■ **IMPORTANT**

- **A right and left tie-rod joint is adjusted to the same length.**

(1) Tie-rod
(2) Tie-rod Lock Nut
(3) Turnbuckle
(4) Outer Tube
(5) Tie-rod Mounting Screw

(A) Wheel to Wheel Distance at front
(B) Wheel to Wheel Distance at rear
(C) Front

W1236547

3TLAAAE6P002A

Axial Sway of Front Wheel

1. Jack up the front side of tractor.
2. Set a dial gauge on the outside of rim.
3. Turn the wheel slowly and read the runout of rim.
4. If the runout exceeds the factory specifications, check the bearing, rim, and front wheel hub.

Axial sway of front wheel	Factory spec.	Less than 5.0 mm 0.20 in.

W1012176

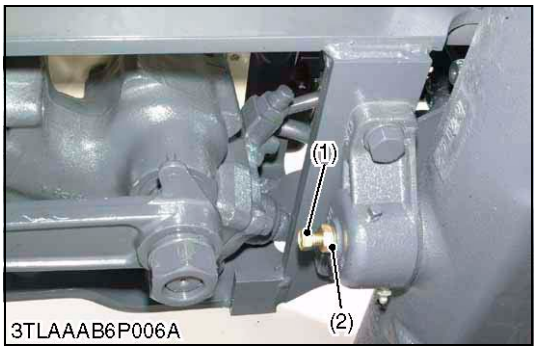

Front Axle Rocking Force

1. Jack up the front side of tractor.
2. Set a spring balance to the front axle flange.
3. Measure the front axle rocking force.
4. If the measurement is not within the factory specifications, adjust the adjusting screw (1).
5. Tighten the lock nut (2) firmly.

Front axle rocking force	Factory spec.	49.0 to 117.7 N 5.0 to 12.0 kgf 11.0 to 26.5 lbs

(When reassembling)

Tightening torque	Lock nut	23.5 to27.4 N·m 2.4 to 2.8 kgf 17.4 to 20.2 ft-lbs

(1) Adjusting Screw (2) Lock Nut

W1012289

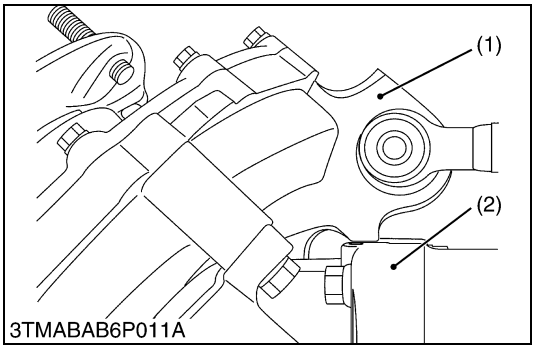

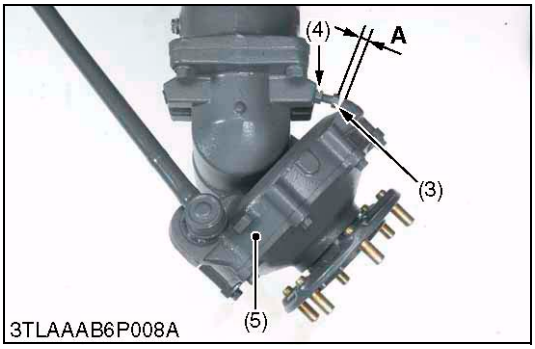

Front Wheel Steering Angle

1. Inflate the tires to the specified pressure.
2. Steer the wheels to the extreme right until the front gear case (1) contacts with the bevel gear case (2) at right hand side of the front axle.
3. If the front gear case (1) can not be contacted with the bevel gear case (2), shorten the length of stopper (3).
4. Keeping the front gear case (1) contacted with the bevel gear case (2), make a specified clearance **"A"** as shown in the lower table.
5. After adjustment, secure the stopper with the lock nut (4).
6. For adjusting the left steering angle, perform the same procedure as mentioned in right steering angle

Clearance (**A**) between bevel gear case and stopper	Factory spec.	1.0 to 3.0 mm 0.04 to 0.12 in.

(1) Front Gear Case
(2) Bevel Gear Case
(3) Stopper
(4) Lock Nut
(5) Front Gear Case

A : Clearance

W1022987

[2] PREPARATION

(1) Separating Front Axle

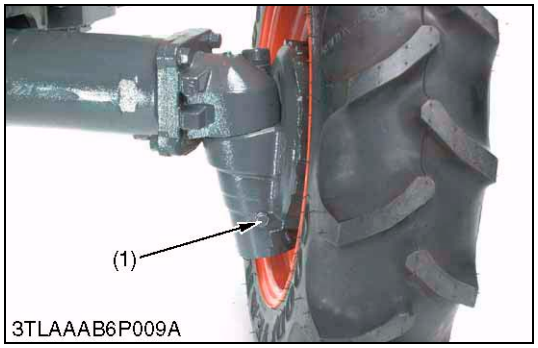

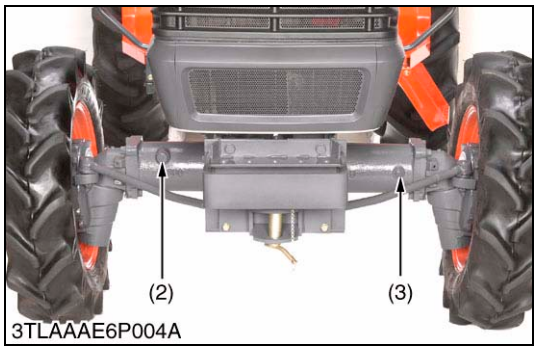

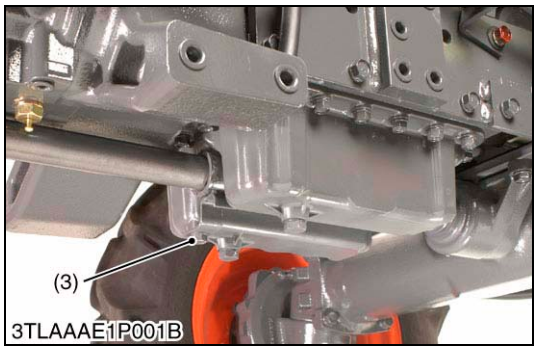

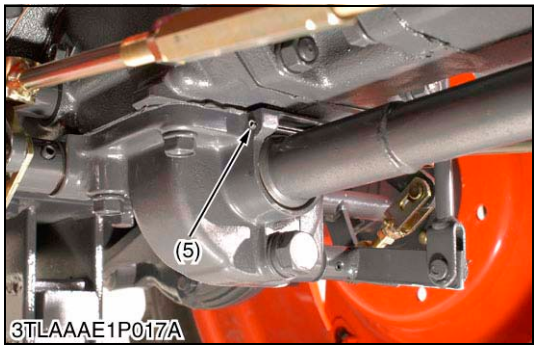

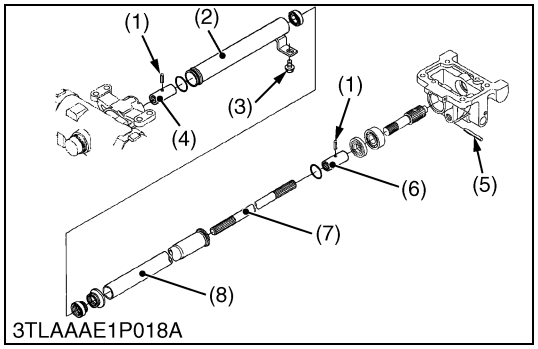

Draining Front Axle Case Oil

1. Place the oil pans underneath the front axle case.
2. Remove the drain plug (1) both sides and filling port plug (2) to drain the oil.
3. After draining, reinstall the drain plugs (1) and filling port plug (2).

(When refilling)

- Remove the filling port plug (2) and check plug (3).
- Fill with the new oil up to the check plug port.
- After filling, reinstall the check plug (3) and filling port plug (2).

Front axle case oil	Capacity	4.5 L 4.8 U.S.qts 3.9 Imp.qts

■ **IMPORTANT**

- **Use KUBOTA SUPER UDT fluid or SAE 80, 90 gear oil. Refer to "LUBRICANTS, FUEL AND COOLANT". (See page G-6.)**

(1) Drain Plug
(2) Filling Port Plug
(3) Check Plug

W1012640

Propeller Shaft

1. Remove the screw (3) then tap out the spring pin (5).
2. Slide the propeller shaft cover 1 (8) to the front and the cover 2 (2) to the rear.
3. Tap out the spring pins (1) and then slide the coupling (6) to the front and coupling (4) to the rear.

(When reassembling)

- Apply grease to the splines of the propeller shaft (7) and pinion shaft.

(1) Spring Pin
(2) Propeller Shaft Cover 2
(3) Screw
(4) Coupling
(5) Spring Pin
(6) Coupling
(7) Propeller Shaft
(8) Propeller Shaft Cover 1

W1031273

3TLAAAE6P005A

Bumper and Tie-rods

1. Place the disassembling stand under the transmission case.
2. Remove the bumper.
3. Remove the tie-rods with the tie-rod end lifter.
   In this case, take special care not to damage the tie-rod end nut (slotted nut). (It is preferable to replace it with an unrequired nut.)
4. Reinstall the bumper.

(When reassembling)

Tightening torque	Tie-rod end nut	39.2 to 44.1 N·m 4.0 to 4.5 kgf·m 28.9 to 32.5 ft-lbs

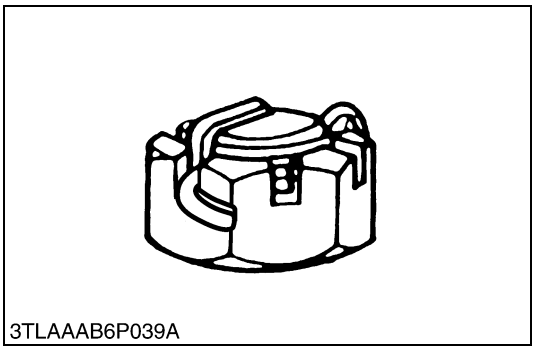
3TLAAAB6P039A

■ **IMPORTANT**

- **After tightening the tie-rod end nut to the specified torque, install a cotter pin as shown in the figure left.**

W1013537

3TLAAAE6P006A

Breather Pipe

1. Remove the breather pipe (1).

(1) Breather Pipe

W1031703

3TLAAAE6P007A

Front Axle

1. Place the disassembling stand under the front axle, and hang up the front bumper by the hoist to support it.
2. Remove the shaft bracket 1 mounting screws and shaft bracket 2 mounting screws.
3. Separate the front axle from the front axle support.
4. Remove the front wheels.

(When reassembling)

Tightening torque	Shaft bracket 1 (front) mounting screws	240 to 260 N·m 24 to 26 kgf·m 173 to 188 ft-lbs
	Shaft bracket 2 (rear) mounting screws	77.4 to 90.2 N·m 7.9 to 9.2 kgf·m 57.2 to 66.5 ft-lbs
	Front wheel mounting lug nuts	137.3 N·m 14.0 kgf·m 101.3 ft-lbs
	Front wheel mounting stud bolts	63.7 to 73.5 N·m 6.5 to 7.5 kgf·m 47.0 to 54.2 ft-lbs

W1013808

[3] DISASSEMBLING AND ASSEMBLING

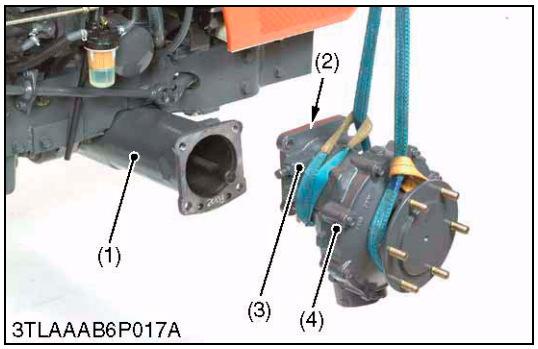

Bevel Gear Case and Front Gear Case

1. Remove the bevel gear case mounting screws.
2. Remove the bevel gear case (3) and front gear case (4) as a unit from the front axle case (1).

(When reassembling)

- Apply grease to the O-ring (2) and take care not to damage it.
- Do not interchange right and left bevel gear case assemblies and front gear case assemblies.

Tightening torque	Bevel gear case mounting screw	123.5 to 147.0 N·m 12.6 to 15.0 kgf·m 91.2 to 108.4 ft-lbs

(1) Front Axle Case
(2) O-ring
(3) Bevel Gear Case
(4) Front Gear Case

W1015066

https://truckmanualshub.com/

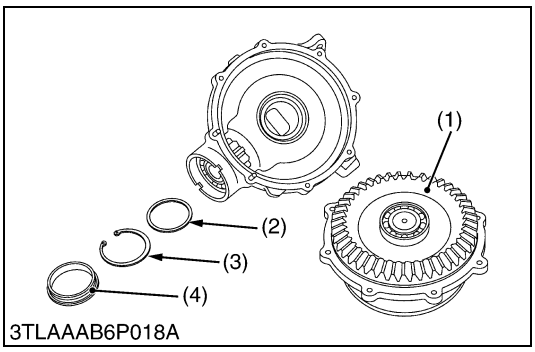

3TLAAAB6P018A

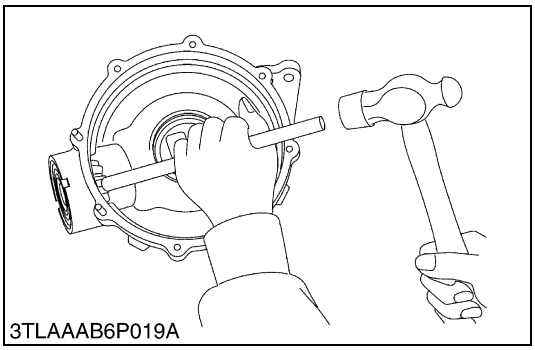
3TLAAAB6P019A

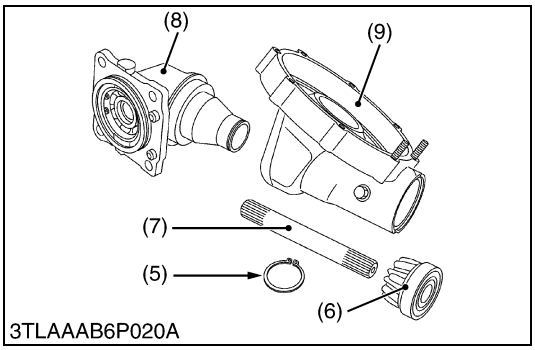

3TLAAAB6P020A

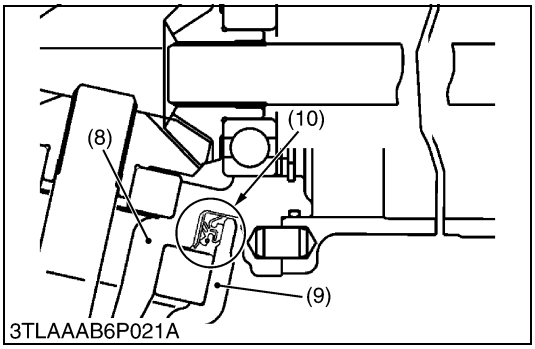

3TLAAAB6P021A

Bevel Gear Case, Axle Flange and Front Gear Case

1. Remove the plug (4).
2. Remove the internal snap ring (3) and shim (2).
3. Remove the axle flange (1).
4. Tap out the bevel gear (6) and ball bearing.
5. Draw out the bevel gear shaft (7).
6. Remove the external snap ring (5).
7. Tap the bevel gear case (8), and separate it from the front gear case (9).

(When reassembling)

- Apply grease to the O-rings of axle flange (1).
- Tighten the axle flange mounting screws and nuts diagonally in several steps.
- Install the oil seal (10) of bevel gear case, noting its direction as shown in the figure below.

Tightening torque	Axle flange mounting stud bolt	11.8 to 15.7 N·m 1.2 to 1.6 kgf·m 8.7 to 11.5 ft-lbs
	Axle flange mounting screws and nuts	23.6 to 27.4 N·m 2.4 to 2.8 kgf·m 17.4 to 20.2 ft-lbs

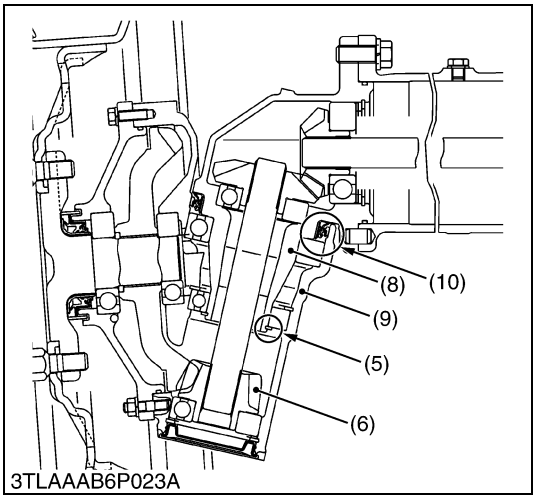

3TLAAAB6P023A

(1) Axle Flange
(2) Shim
(3) Internal Snap Ring
(4) Plug
(5) External Snap Ring
(6) Bevel Gear
(7) Bevel Gear Shaft
(8) Bevel Gear Case
(9) Front Gear Case
(10) Oil Seal

W1015238

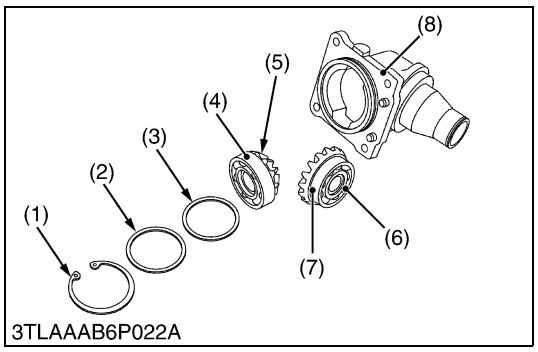

3TLAAAB6P022A

Bevel Gear Case Gears

1. Remove the internal snap ring (1).
2. Take out the bevel gears (5), (7) with ball bearings (4), (6), collar (2) and shims (3).

(When reassembling)

- Install the same shims (3) before they are removed.

(1) Internal Snap Ring
(2) Collar
(3) Shim
(4) Ball Bearing
(5) Bevel Gear
(6) Ball Bearing
(7) Bevel Gear
(8) Bevel Gear Case

W1015856

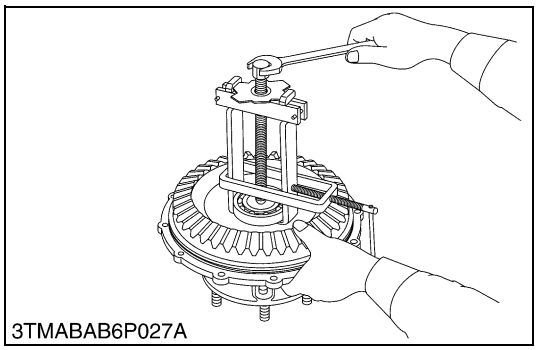
3TMABAB6P027A

Axle

1. Remove the bearing with a special use puller set.
2. Take out the bevel gear (2).
3. Take out the collar (1).
4. Tap out the axle (3).

(When reassembling)

- Install the oil seal (5) of axle flange (4), noting its direction as shown in the figure below.

(1) Collar
(2) Bevel Gear
(3) Axle
(4) Axle Flange
(5) Oil Seal

W1016011

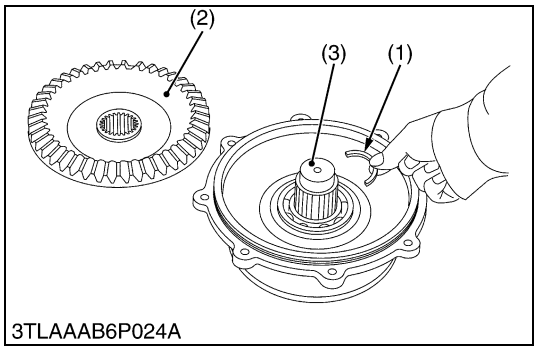

3TLAAAB6P024A

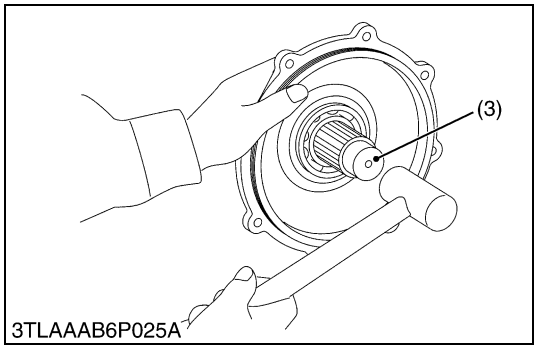

3TLAAAB6P025A

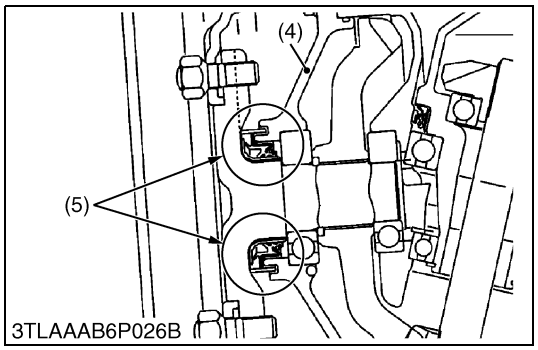

3TLAAAB6P026B

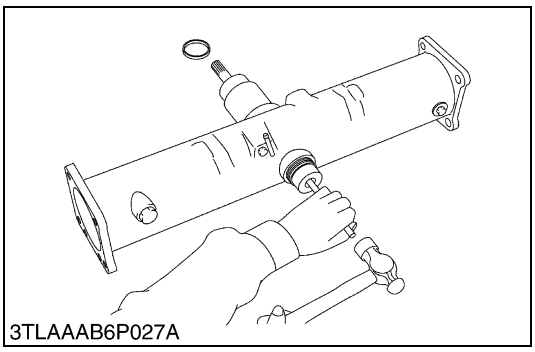
3TLAAAB6P027A

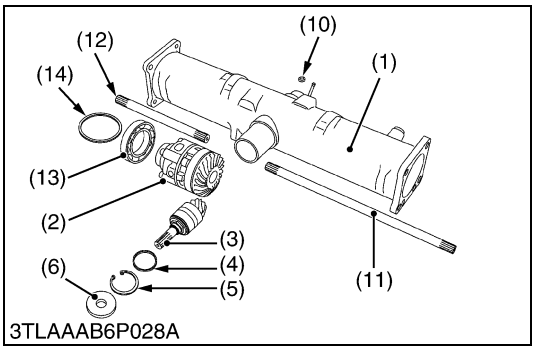

3TLAAAB6P028A

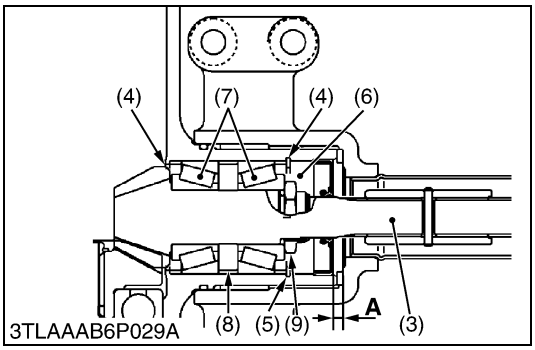

3TLAAAB6P029A

Spiral Bevel Pinion Shaft and Differential Gear Assembly

1. Take out the differential yoke shaft (11), (12) both sides.
2. Remove the oil seal (6) and internal snap ring (5).
3. Remove the plug (10), and then tap out the spiral bevel pinion shaft (3) with a brass rod and hammer.
4. Take out the differential gear assembly (2), ball bearing (13) and shim (14) from right side of front axle case (1).
5. Remove the stake of lock nut (9), and then remove the lock nut (9).
6. Remove the taper roller bearings (7).

(When reassembling)

- Replace the lock nut (9), oil seal (6) and plug (10) with new ones.
- Apply grease to the oil seal (6).
- Install the same shims and collars before they are removed.
- Install the taper roller bearings correctly, noting their direction, and apply gear oil to them.
- When press-fitting the oil seal (6), observe the dimension **"A"** described in the figure.
- Stake the lock nut (9) firmly.
- Tighten up the lock nut (9) until the turning force of the spiral bevel pinion shaft reaches the factory specifications.

Spiral bevel pinion shaft turning torque	Factory spec.	0.98 to 1.18 N·m 0.1 to 0.12 kgf·m 0.72 to 0.89 ft-lbs

(1) Front Axle Case
(2) Differential Gear Assembly
(3) Spiral Bevel Pinion Shaft
(4) Adjusting Collar
(5) Internal Snap Ring
(6) Oil Seal
(7) Taper Roller Bearing
(8) Collar
(9) Lock Nut
(10) Plug
(11) Differential Yoke Shaft RH
(12) Differential Yoke Shaft LH
(13) Ball Bearing
(14) Shim

A : 1 mm (0.039 in.)

W1016385

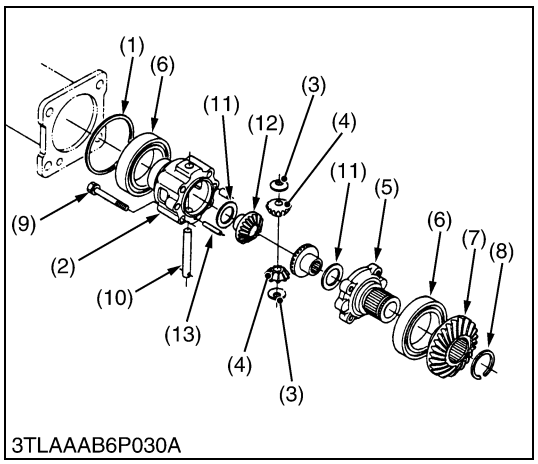

3TLAAAB6P030A

Differential Gear

1. Remove the differential case cover mounting screws (9) and then take out the differential case cover (5), ball bearing (6) and spiral bevel gear (7) as a unit.
2. Remove the external snap ring (8), and then remove the ball bearing (6) and spiral bevel gear (7) as a unit with a puller.
3. Remove the straight pin (13).
4. Pull out the pinion shaft (10) and take out the differential pinions (4) and differential side gears (12).

■ **NOTE**

- **Arrange the parts to note their original position.**

(When reassembling)

- Apply molybdenum disulfide (Three Bond 1901 or equivalent) to the inner circumferential surface of the differential side gears (12) and differential pinions (4).
- Install the pinion shaft (10) so that the hole on it will align with the hole on differential case (2), and install the straight pin (13).

Tightening torque	Differential case cover mounting screw	48.1 to 55.9 N·m 4.9 to 5.7 kgf·m 35.4 to 41.2 ft-lbs

(1) Shim
(2) Differential Case
(3) Thrust Collar
(4) Differential Pinion
(5) Differential Case Cover
(6) Ball Bearing
(7) Spiral Bevel Gear
(8) External Snap Ring
(9) Screws
(10) Pinion Shaft
(11) Shim
(12) Differential Side Gear
(13) Straight Pin

W1017053

[4] SERVICING

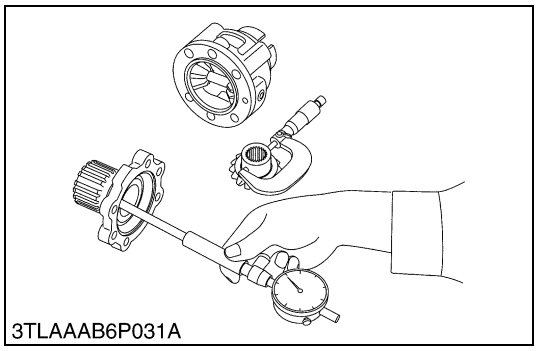
3TLAAAB6P031A

Clearance between Differential Case (Differential Case Cover) and Differential Side Gear

1. Measure the differential side gear boss O.D..
2. Measure the differential case bore I.D. and calculate the clearance.
3. Measure the differential case cover bore I.D. and calculate the clearance.
4. If the clearance exceeds the allowable limit, replace faulty parts.

Clearance between differential case (Differential case cover) and differential side gear	Factory spec.	0.050 to 0.151 mm 0.00197 to 0.00594 in.
	Allowable limit	0.35 mm 0.0138 in.

Differential case bore I.D.	Factory spec.	32.000 to 32.064 mm 1.25984 to 1.26228 in.
Differential case cover bore I.D.	Factory spec.	32.000 to 32.025 mm 1.25984 to 1.26083 in.
Differential side gear O.D.	Factory spec.	31.911 to 31.950 mm 1.25634 to 1.25787 in.

W1018154

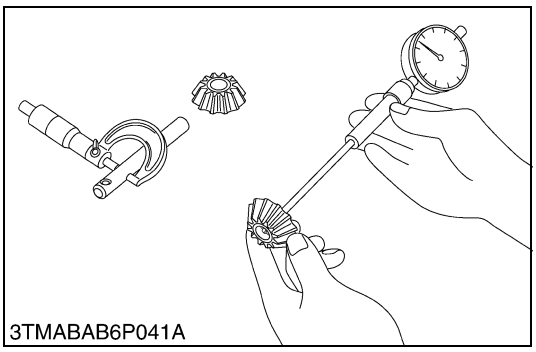
3TMABAB6P041A

Clearance between Pinion Shaft and Differential Pinion

1. Measure the pinion shaft O.D..
2. Measure the differential pinion I.D. and calculate the clearance.
3. If the clearance exceeds the allowable limit, replace faulty parts.

Clearance between pinion shaft and differential pinion	Factory spec.	0.064 to 0.100 mm 0.00252 to 0.00394 in.
	Allowable limit	0.25 mm 0.0096 in.

Pinion shaft O.D.	Factory spec.	13.950 to 13.968 mm 0.54921 to 0.54992 in.
Differential pinion I.D.	Factory spec.	14.032 to 14.050 mm 0.55244 to 0.55315 in.

W1018504

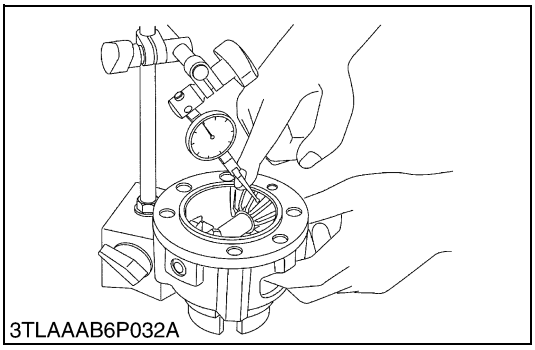
3TLAAAB6P032A

Backlash between Differential Pinon and Differential Side Gear

1. Set a dial gauge (lever type) on a tooth of the differential pinion.
2. Fix the differential side gear and move the differential pinion to measure the backlash.
3. If the measurement exceeds the factory specifications, adjust with the differential side gears shims.

Backlash between differential pinion and differential side gear	Factory spec.	0.1 to 0.3 mm 0.004 to 0.012 in.

(Reference)

- Thickness of adjusting shims :
  0.4 mm (0.016 in.) 1.0 mm (0.039 in.)
  0.6 mm (0.024 in.) 1.2 mm (0.047 in.)
  0.8 mm (0.031 in.)
- Tooth contact : More than 35 %
- Center of tooth contact :
  1/3 to 1/2 of the entire width from the small end.

W1018659

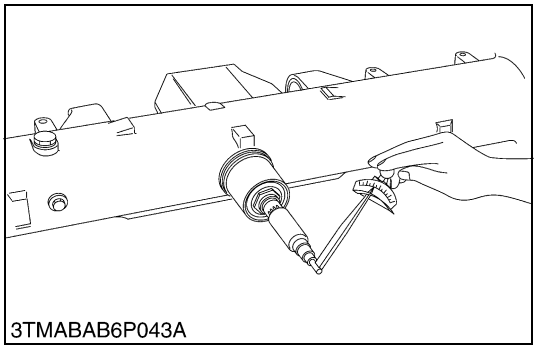
3TMABAB6P043A

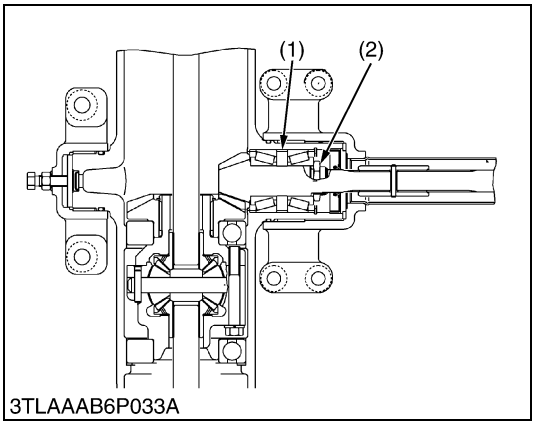

3TLAAAB6P033A

Turning Force of Spiral Bevel Pinion Shaft (Pinion Shaft Only)

1. Install the spiral bevel pinion shaft assembly only to the front axle case.
2. Measure the turning torque of spiral bevel pinion shaft.
3. If the turning torque is not within the factory specifications, adjust with the lock nut.
   If the turning torque is not able to adjust by lock nut (2), change the thickness of collar (1) and adjust with lock nut (2) again.

(Reference)

- Standard size of collar (1) : 10.0 mm (0.349 in.) of thickness

Turning torque of spiral bevel pinion shaft	Factory spec.	0.98 to 1.18 N·m 0.10 to 0.12 Kgf·m 0.72 to 0.87 ft-lbs

■ **NOTE**

- **After turning torque adjustment, be sure to stake the lock nut.**

(1) Collar (2) Lock Nut

W1018802

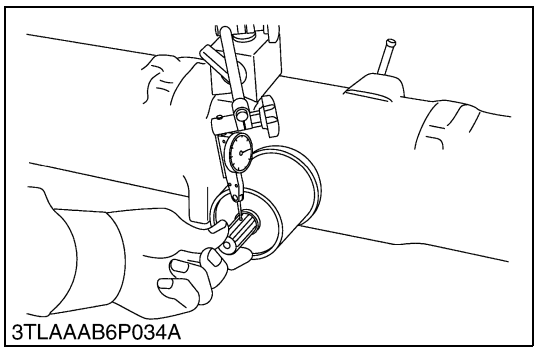
3TLAAAB6P034A

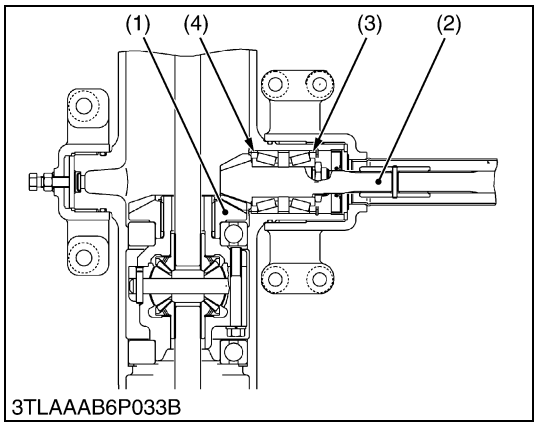

3TLAAAB6P033B

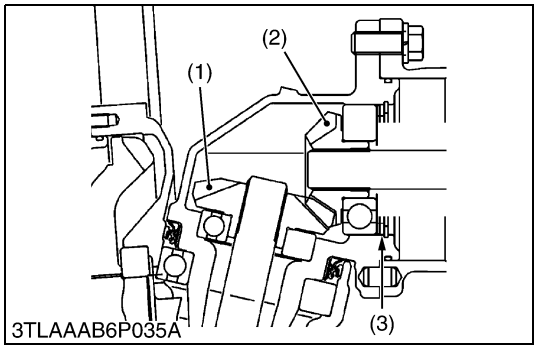

3TLAAAB6P035A

Backlash between Spiral Bevel Pinion Shaft and Spiral Bevel Gear

1. Set a dial gauge (lever type) with its finger on the spline of spiral bevel pinion shaft.
2. Measure the backlash by moving the spiral bevel pinion shaft by hand lightly.
3. If the backlash is not within the factory specifications, change the adjusting collars (3), (4). Change the adjusting collar (4) to 0.1 mm (0.004 in.) smaller size, and change the adjusting collar (3) to 0.1 mm (0.004 in.) larger size.
4. Adjust the backlash to the correct specification by repeating the above procedures.

Backlash between spiral bevel pinion shaft and spiral bevel gear	Factory spec.	0.1 to 0.3 mm 0.004 to 0.012 in.

(1) Spiral Bevel Gear
(2) Spiral Bevel Pinion Shaft
(3) Adjusting Collar
(4) Adjusting Collar

W1019155

Backlash between 11T Bevel Gear and 16T Bevel Gear

1. Place a strip of fuse to three spots on the 16T bevel gear (1) with grease.
2. Fix the front axle case, bevel gear case and front gear case.
3. Turn the axle.
4. Remove the bevel gear case from front axle case and measure the thickness of the fuses with an outside micrometer.
5. If the backlash is not within the factory specifications, adjust with shim (3).

Backlash between 11T bevel gear and 16T bevel gear	Factory spec.	0.15 to 0.35 mm 0.0059 to 0.0138 in.

(Reference)

- Thickness of adjusting shims (3) :
  0.8 mm (0.031 in.) 1.2 mm (0.047 in.)
  1.0 mm (0.039 in.)
- Tooth contact : More than 35 %

(1) 16T Bevel Gear
(2) 11T Bevel Gear
(3) Shim

W1019327

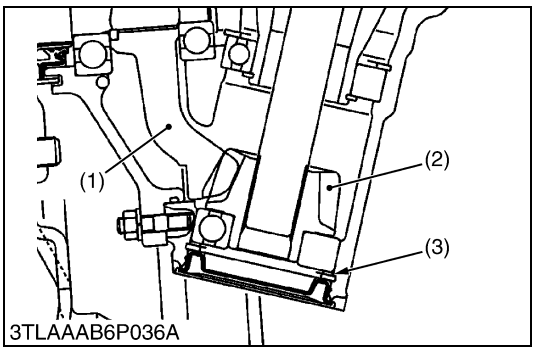

Backlash between 11T Bevel Gear and 42T Bevel Gear

1. Place a strip of fuse to three spots on the 42T bevel gear (1) with grease.
2. Fix the axle flange and front gear case.
3. Turn the axle.
4. Remove the axle flange from front gear case and measure the thickness of the fuse with an outside micrometer.
5. If the backlash is not within the factory specifications, adjust with shim (3).

Backlash between 11T bevel gear and 42T bevel gear	Factory spec.	0.15 to 0.35 mm 0.0059 to 0.0138 in.

(Reference)

- Thickness of adjusting shims (3) :
  1.0 mm (0.039 in.) 1.8 mm (0.071 in.)
  1.2 mm (0.047 in.) 2.0 mm (0.079 in.)
  1.4 mm (0.055 in.) 2.2 mm (0.087 in.)
  1.6 mm (0.063 in.)
- Tooth contact : More than 35 %

(1) 42T Bevel Gear
(2) 11T Bevel Gear
(3) Shim

W1019582

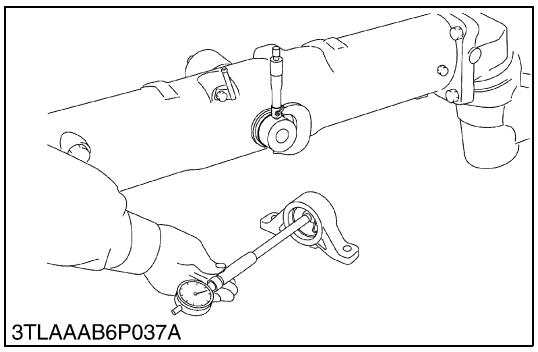
3TLAAAB6P037A

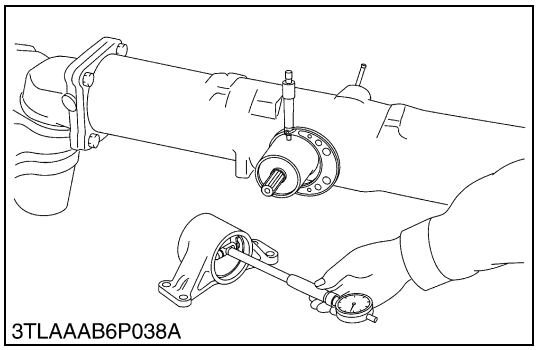
3TLAAAB6P038A

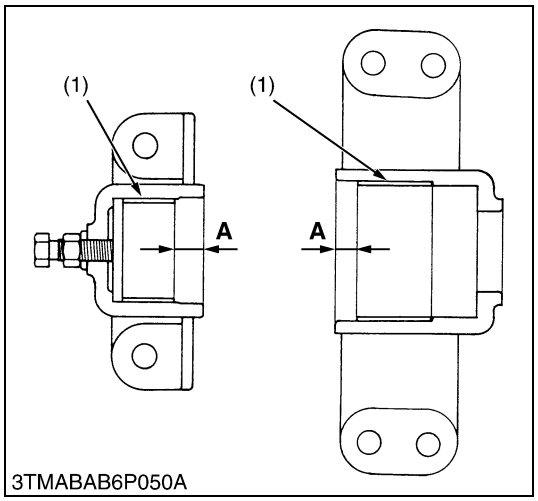

3TMABAB6P050A

Clearance between Front Axle Case Bosses and Bracket Bushings

1. Measure the front axle case bosses O.D. with an outside micrometer.
2. Measure the bracket bushing I.D. with an inside micrometer and calculate the clearance.
3. If the clearance exceeds the allowable limit, replace the bracket bushing.
4. If the clearance still exceeds the allowable limit, replace the front axle case.

Clearance between front axle case boss (front) and bracket bushing (front)	Factory spec.	0.025 to 0.160 mm 0.00098 to 0.00630 in.
	Allowable limit	0.35 mm 0.0138 in.

Front axle case boss (front) O.D.	Factory spec.	49.950 to 49.975 mm 1.96653 to 1.96752 in.
Bracket bushing (front) I.D.	Factory spec.	50.000 to 50.110 mm 1.96850 to 1.97283 in.

Clearance between front axle case boss (rear) and bracket bushing (rear)	Factory spec.	0.025 to 0.190 mm 0.00098 to 0.00748 in.
	Allowable limit	0.35 mm 0.0138 in.

Front axle case boss (rear) O.D.	Factory spec.	70.000 to 70.035 mm 2.75590 to 2.75728 in.
Bracket bushing (rear) I.D.	Factory spec.	70.060 to 70.190 mm 2.75826 to 2.76338 in.

■ **Press-fitting Bushing**

- When press-fitting a new bushing, observe the dimension described in the figure.

Press-fit depth of bushing (**A**)	Factory spec.	12 mm 0.47 in.

■ **NOTE**

- **After replacing the bushing, be sure to adjust the front axle rocking force. (See page 6-S7.)**

(1) Bushing **A : Depth of Bushing**

W1019812

https://truckmanualshub.com/

7 STEERING

https://truckmanualshub.com/

MECHANISM

CONTENTS

1. STRUCTURE 7-M1
[1] LINKAGE 7-M1
[2] STEERING GEAR BOX 7-M2
(1) Structure 7-M2
(2) Operation 7-M3

https://truckmanualshub.com/

1. STRUCTURE

[1] LINKAGE

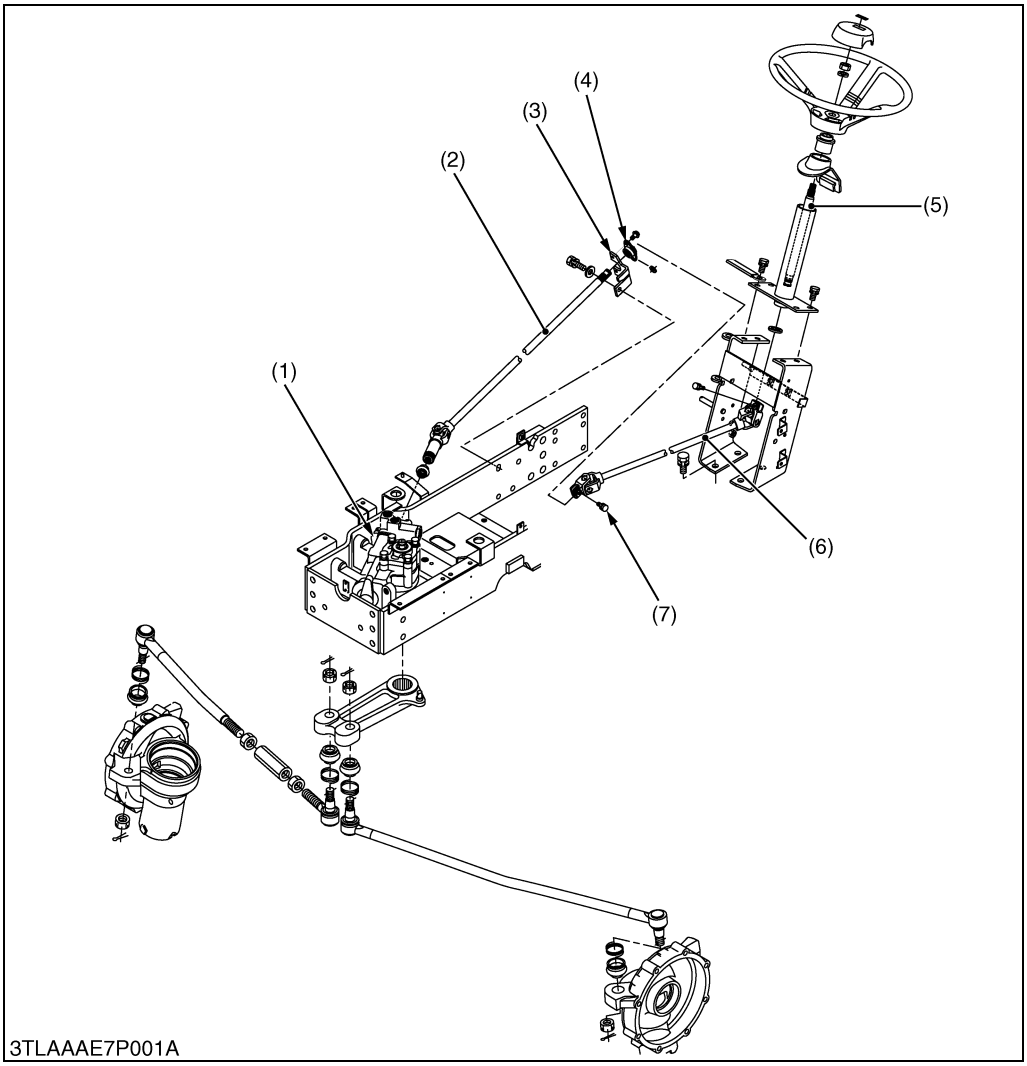

(1) Steering Gear Box
(2) Joint Shaft 2
(3) Support
(4) Mini-Flange
(5) Joint Shaft
(6) Steering Shaft
(7) Bolt

W1012968

The integral type power steering is used on this tractor. This steering system is composed of steering wheel, steering joint shafts, steering gear box and other components shown in the figure.

[2] STEERING GEAR BOX

(1) Structure

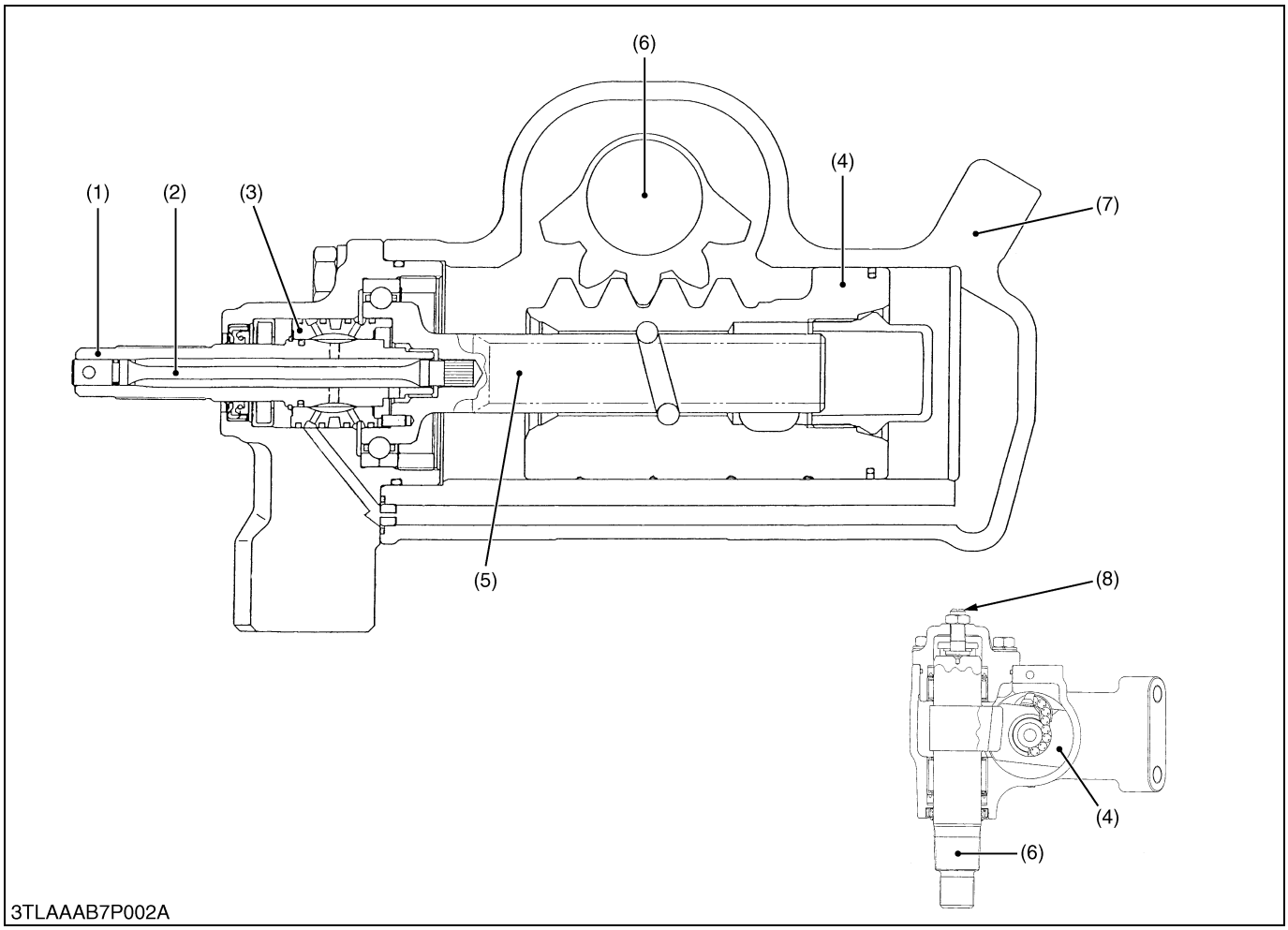

(1) Input Shaft	(3) Sleeve	(5) Main Shaft	(7) Gear Box
(2) Torsion Bar	(4) Ball Nut	(6) Sector Shaft	(8) Adjusting Screw

This integral power steering mechanism consists of the following two major components as shown above: hydraulic control valve and steering force assist hydraulic cylinder. The control valve is housed in the casing and composed of sleeve (3), input shaft (1) and other parts. The hydraulic cylinder, on the other hand, is composed of gear box (7) (cylinder tube), ball nut (4) (piston) and other parts. When the steering wheel is turned, the reaction force from the tires is exerted through the sector shaft (6) onto the main shaft (5). The torsion bar (2) is then twisted to make a gap between the input shaft (1) and sleeve (3). Such gap activates the valve to switch the oil flow direction. The sector shaft's pinion, which comes in mesh with the ball nut's rack, is tapered along the teeth. In this way, the sector shaft (6) that turns by the adjust screw (8) changes the clearance between the rack and pinion, adjusting the play of the steering wheel. (Tighten the adjust screw and the play becomes smaller, and vice versa.).

(2) Operation

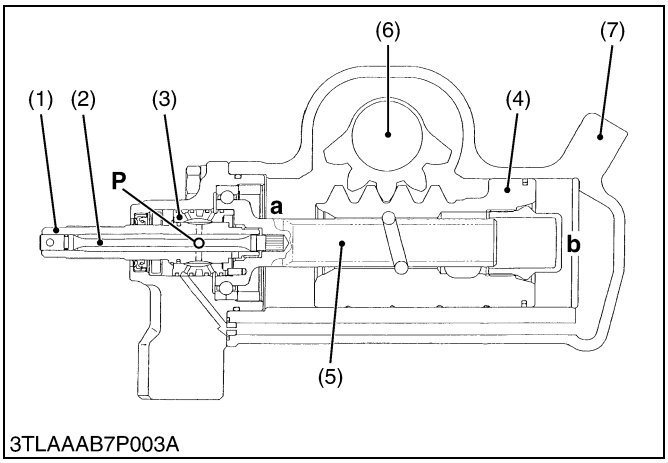

■ Neutral Position

While the steering wheel is not moved, the torsion bar (2) is not twisted. There is no gap between the input shaft (1) and sleeve (3). This makes no pressure difference between the chambers **"a"** and **"b"** of the cylinder, which keeps the ball nut (4) and sector shaft (6) in their positions.

(1) Input Shaft
(2) Torsion Bar
(3) Sleeve
(4) Ball Nut
(5) Main Shaft
(6) Sector Shaft
(7) Gear Box

a : Chamber
b : Chamber
T : Pump Port

W1013776

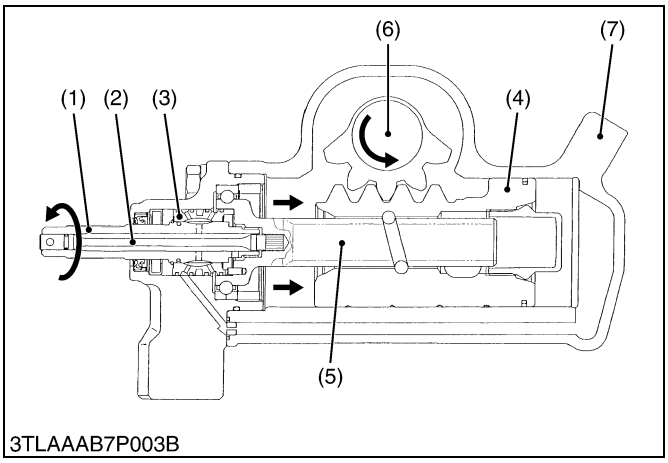

■ Left Turn

When the steering wheel is turned left, the initial friction between the tires and the road surface keeps the ball nut (4) and sector shaft (6) in their positions. The torsion bar (2) alone is twisted to produce a gap between the input shaft (1) and sleeve (3) and to activate the valve. By so doing, the cylinder's chamber **"a"** comes under high pressure and the ball nut (4) is moved to the right. Finally the sector shaft (6) is turned to turn the machine to the left.

(1) Input Shaft
(2) Torsion Bar
(3) Sleeve
(4) Ball Nut
(5) Main Shaft
(6) Sector Shaft
(7) Gear Box

W1013318

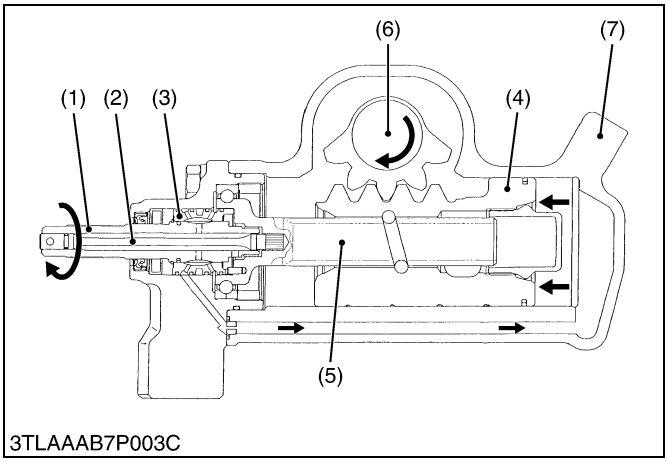

■ Right Turn

The operating principle is the same as with the left turn. For the right turn, however, the gap between the input shaft (1) and sleeve (3) is in the direction opposite to that of left turn. By so doing, the cylinder's chamber **"b"** comes under high pressure and the ball nut (4) is moved to the left. Finally the sector shaft (6) is turned to turn the machine to the right.

(1) Input Shaft
(2) Torsion Bar
(3) Sleeve
(4) Ball Nut
(5) Main Shaft
(6) Sector Shaft
(7) Gear Box

W1013440

■ Manual Operation in Case of Hydraulic System Failure

Let's suppose that the hydraulic system fails due to a defective pump, damaged pipe or the like and that the steering resistance is too high to use the power steering system. In such a case the steering wheel can be operated in manual mode. When the steering wheel is turned, the torsion bar is twisted for the valve's stroke and from now on the steering wheel functions in the manual mode. It should be noted that the steering wheel's free play becomes larger than that in the power steering mode.

W1013562

https://truckmanualshub.com/

SERVICING

CONTENTS

1. TROUBLESHOOTING 7-S1
2. SERVICING SPECIFICATIONS 7-S2
3. TIGHTENING TORQUES 7-S3
4. CHECKING, DISASSEMBLING AND SERVICING 7-S4
   [1] CHECKING AND ADJUSTING 7-S4
   [2] PREPARATION 7-S5
      (1) Separating Steering Gear Box 7-S5
   [3] DISASSEMBLING AND ASSEMBLING 7-S7
   [4] SERVICING 7-S9

https://truckmanualshub.com/

1. TROUBLESHOOTING

Symptom	Probable Cause	Solution	Reference Page
Excessive Steering Wheel Play	Backlash between sector gear shaft and rack (piston) too large	Adjust	7-S9
	Steering linkage worn	Replace	–
	Sector gear shaft worn	Replace	7-S7
Tractor Pulls to Right or Left	Tire pressure uneven	Adjust	G-43
	Steering wheel play too small	Adjust	7-S4
	Improper toe-in adjustment	Adjust	6-S6
Front Wheels Vibration	Steering linkage worn	Replace	–
	Improper toe-in adjustment	Adjust	6-S6
Hard Steering	Transmission fluid improper or insufficient	Change	G-6, 12
	Oil leak from pipe joint	Retighten	–
	Hydraulic pump malfunctioning	Replace	8-S7, S13
	Improper relief valve adjustment	Adjust	8-S8
	Relief valve malfunctioning	Replace	7-S8
	Valve housing and sleeve malfunctioning	Replace	7-S7, S8
	Seals in the steering gear box damaged	Replace	7-S7, S8
	Backlash between sector gear shaft and rack (piston) too small	Adjust	7-S9
	Air in the hydraulic pipes	Air vent	–
Low Operating Pressure	Hydraulic pump malfunctioning	Replace	8-S7, S13
	Improper relief valve adjustment	Adjust	8-S8
	Relief valve malfunctioning	Replace	7-S8
	Seals in the steering gear box damaged	Replace	7-S7, S8
	Rack (piston) malfunctioning	Replace rack (piston) assembly	7-S7, S8
	Oil leak from pipe or pipe broken	Replace	–
Steering Wheel Does Not Return to Neutral Position	Valve housing and sleeve jammed	Repair or replace	8-S6 to S8
	Valve housing oil seal damaged	Replace	7-S7, S8
Steering Force Fluctuates	Insufficient oil	Replenish	–
	Insufficient bleeding	Bleed	–
	Control valve malfunctioning	Replace	7-S7, S8
Noise	Insufficient oil	Replenish	–
	Air sucked in pump from suction circuit	Repair	–
	Pipe deformed	Replace	–

W1014322

2. SERVICING SPECIFICATIONS

Item		Factory Specification	Allowable Limit
Steering Wheel	Play	20 to 50 mm 0.79 to 1.97 in.	–
Relief Valve **Condition** • Engine Speed : Approx. 2500 min^{-1} (rpm) • Oil Temperature : 40 to 60 °C 104 to 140 °F	Steering Pressure	11.1 to 12.1 MPa 113 to 123 kgf/cm^2 1607 to 1749 psi	– –
Sector Gear and Ball Nut	Backlash	0.3 mm 0.012 in.	–
Valve Housing and Spool	Clearance	0.17 to 0.28 mm 0.0067 to 0.0110 in.	0.4 mm 0.0157 in.
Steering Gear Box and Ball Nut	Clearance	0.035 to 0.08 mm 0.0013 to 0.0031 in.	0.15 mm 0.0059 in.
Ball Nut Assembly	Axial Play	0.02 mm 0.0008 in.	0.04 mm 0.0015 in.

W1013874

https://truckmanualshub.com/

3. TIGHTENING TORQUES

Tightening torques of screws, bolts and nuts on the table below are especially specified.
(For general use screws, bolts and nuts : See page G-7.)

Item	N·m	kgf·m	ft-lbs
Tie-rod end nut	39.2 to 44.1	4.0 to 4.5	28.9 to 32.5
Steering gear box mounting screw	77.5 to 90.2	7.9 to 9.2	57.2 to 66.5
Power steering delivery joint bolt	34 to 39	3.5 to 4.0	25.3 to 28.9
Pitman arm mounting nut	147 to 196	15.0 to 20.0	108.5 to 144.7
Side cover mounting screw	19.6 to 29.4	2.0 to 3.0	14.5 to 21.7
Valve housing mounting screw	48.0 to 55.0	4.9 to 5.7	35.4 to 41.2
Ball nut assembly lock nut	88.3 to 107.9	9.0 to 11.1	65.1 to 80.3
Relief pressure adjusting screw lock nut	55.8 to 78.4	6.0 to 8.0	43.4 to 57.9

W1012736

4. CHECKING, DISASSEMBLING AND SERVICING

[1] CHECKING AND ADJUSTING

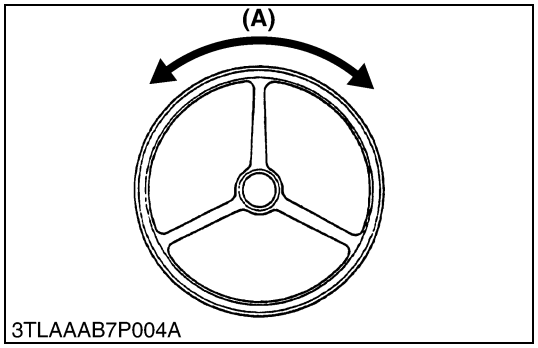

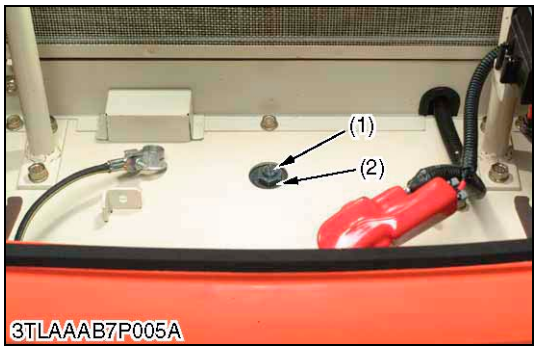

Steering Wheel Play

1. Turn the front wheels straight ahead.
2. Rotate the steering wheel lightly by hand, and measure the play **(A)**.
3. If the play **(A)** is not within the factory specifications, turn the adjusting screw (1) to adjust.

Steering wheel play **(A)**	Factory spec.	20 to 50 mm 0.79 to 1.97 in.

(Adjusting)

- Remove the battery.
- Loosen the lock nut (2) and turn the adjusting screw (1) with a screwdriver to adjust the play **(A)**.
  When the adjusting screw (1) is turned clockwise, the play **(A)** decreases.
- After adjustment, fix it with lock nut (2) while holding the adjusting screw (1).

(1) Adjusting Screw
(2) Lock Nut
(A) Play

W1012529

[2] PREPARATION

(1) Separating Steering Gear Box

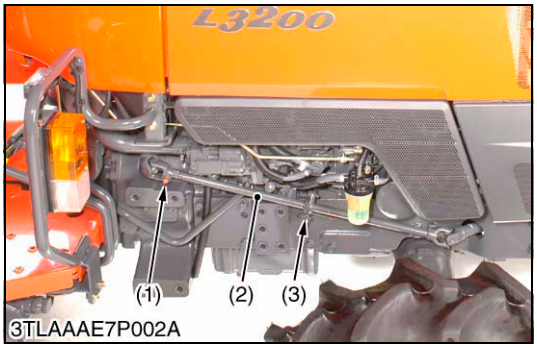

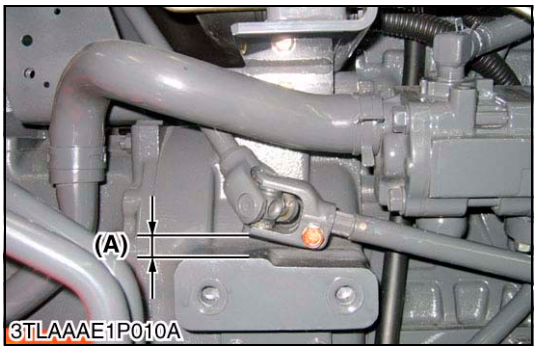

Joint Shaft

1. Remove the support (3) mounting screw.
2. Remove the screw (1).
3. Remove the joint shaft (2).

(When reassembling)

- Lift the universal joint so that there is a clearance **(A)** of more than 5 mm (0.19 in.) between the universal joint and flywheel housing. Then fit the support (3) is position.

(1) Screw
(2) Joint Shaft
(3) Support

(A) Clearance

W1025827

Bumper and Tie-rods

1. Place the disassembling stand under the transmission case.
2. Remove the bumper.
3. Remove the tie-rods with the tie-rod end lifter.
   In this case, take special care not to damage the tie-rod end nut (slotted nut). (It is preferable to replace it with an unrequired nut.)
4. Reinstall the bumper.

(When reassembling)

Tightening torque	Tie-rod end nut	39.2 to 44.1 N·m 4.0 to 4.5 kgf·m 28.9 to 32.5 ft-lbs

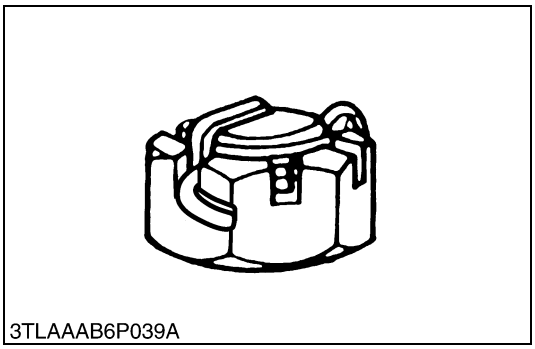

■ **IMPORTANT**

- **After tightening the tie-rod end nut to the specified torque, install a cotter pin as shown in the figure left.**

W1015206

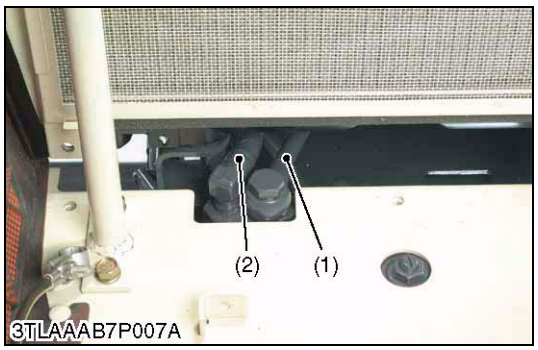

Delivery Pipe and Return Hose

1. Remove the battery and shutter plate.
2. Disconnect the power steering delivery pipe (1) and return hose (2).

(When reassembling)

Tightening torque	Delivery pipe joint bolt	34 to 39 N·m 3.5 to 4.0 kgf·m 25.3 to 28.9 ft-lbs

(1) Delivery Pipe (2) Return Hose

W1026476

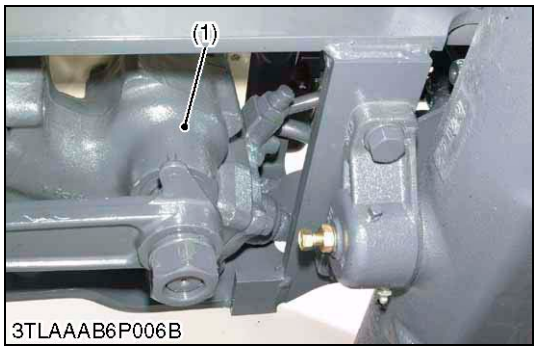

Steering Gear Box Assembly

1. Remove the steering gear box mounting screws.
2. Remove the steering gear box (1).

(When reassembling)

Tightening torque	Steering gear box mounting screw	77.5 to 90.2 N·m 7.9 to 9.2 kgf·m 57.2 to 66.5 ft-lbs

(1) Steering Gear Box

W1026776

[3] DISASSEMBLING AND ASSEMBLING

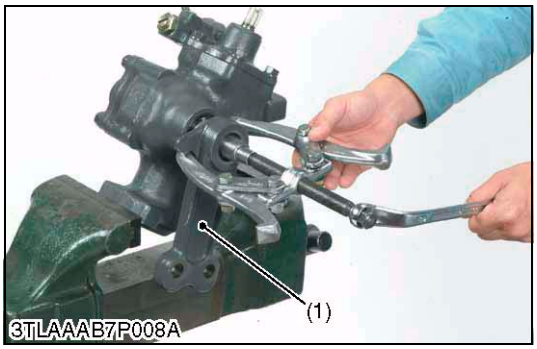

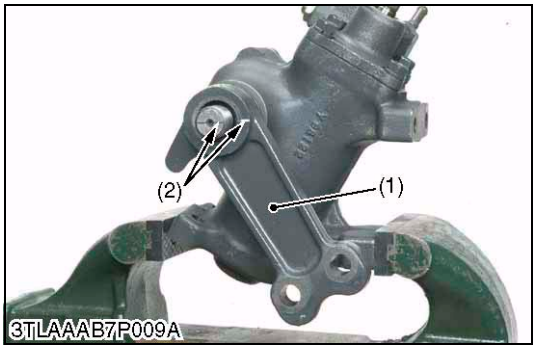

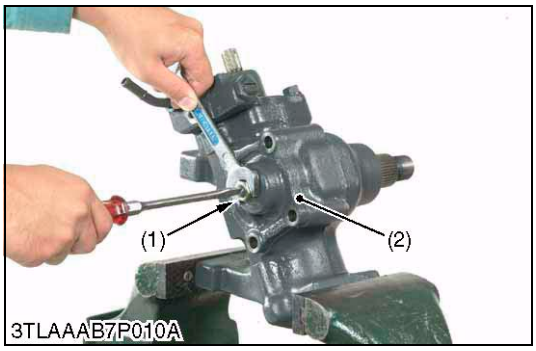

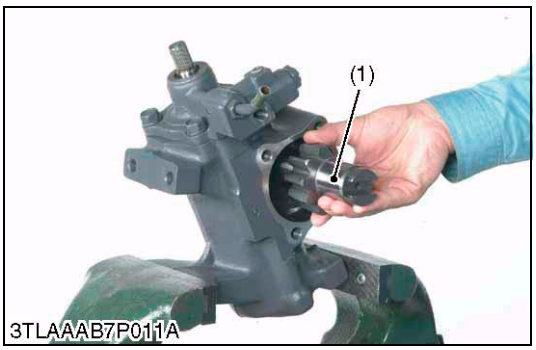

Pitman Arm

1. Turn the input shaft clockwise and counterclockwise several time to drain oil from gear box.
2. Secure the power steering gear box with a vise.
3. Remove the nut and spring washer.
4. Remove the pitman arm (1) with puller.

(When reassembling)

- Install the pitman arm to the sector shaft, aligning their aligning marks (2).

Tightening torque	Pitman arm mounting nut	147 to 196 N·m 15 to 20 kgf·m 108.5 to 144.7 ft-lbs

(1) Pitman Arm (2) Aligning Mark

W1014451

Side Cover

1. Loosen the lock nut (1).
2. Remove the side cover mounting screws, turn the adjusting screw clockwise, and remove the side cover (2).

(When reassembling)

Tightening torque	Lock nut	58.8 to 78.4 N·m 6.0 to 8.0 kgf·m 43.4 to 57.9 ft-lbs

(1) Lock Nut (2) Side Cover

W1258963

Sector Gear Shaft

1. Remove the sector gear shaft (1) from the side cover.

(When reassembling)

(1) Sector Gear Shaft

W1027390

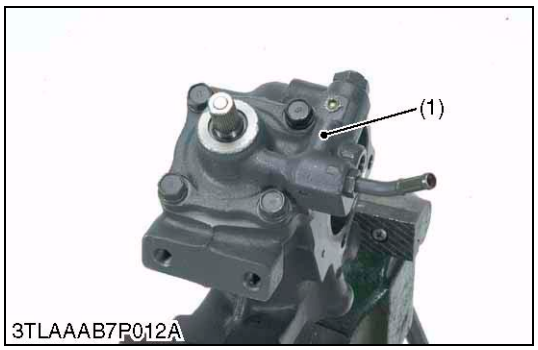

Valve Assembly

1. Remove the valve mounting screws.
2. Remove the valve assembly (1) and ball nut (2).

(When reassembling)

- Apply oil to O-ring and oil seal.

Tightening torque	Valve mounting screw	48.0 to 55.0 N·m 4.9 to 5.7 kgf·m 35.4 to 41.2 ft-lbs

(1) Valve Assembly
(2) Ball Nut

W10157020

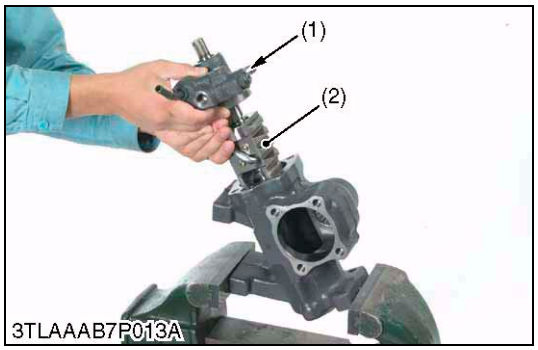

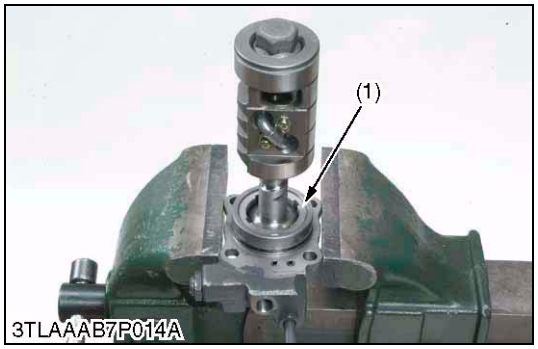

Ball Nut Assembly

1. Remove the lock nut (1).
2. Take out the ball nut assembly (2).

(When reassembling)

- Apply oil to sleeve.

Tightening torque	Lock nut	88.3 to 107.9 N·m 9.0 to 11.1 kgf·m 65.1 to 80.3 ft-lbs

(1) Lock Nut
(2) Ball Nut Assembly

W10277980

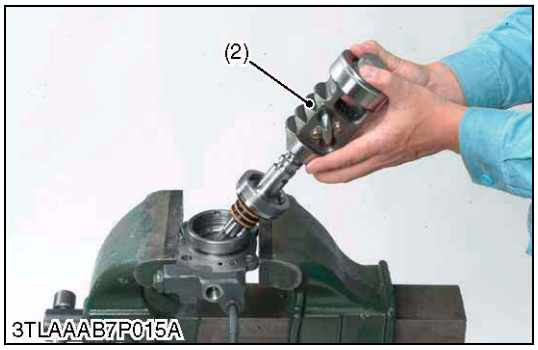

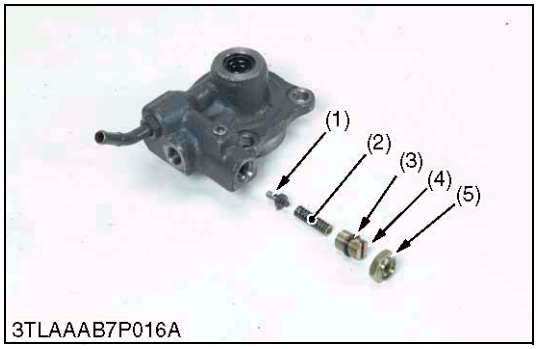

Relief Valve

1. Loosen the lock nut (5) and remove the adjusting screw (4).
2. Take out the spring (2) and poppet (1).

(When reassembling)

- Apply grease to O-ring (3).
- Be sure to adjust the relief valve pressure. (See page 8-S8.)

Tightening torque	Lock nut	49.1 to78.5 N·m 5.0 to 8.0 kgf·m 36.2 to 57.9 ft-lbs

(1) Poppet
(2) Spring
(3) O-ring
(4) Adjusting Screw
(5) Lock Nut

W1016158

[4] SERVICING

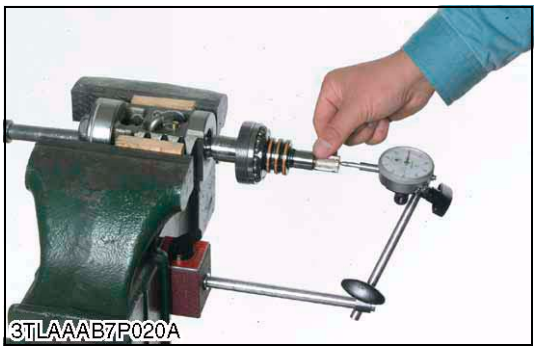

Backlash between Sector Gear and Ball Nut

1. Set a dial indicator with its finger on the pitman arm.
2. Move the pitman arm lightly, and measure the pitman arm deflection.
3. If the measurement is not within the factory specifications, adjust the backlash with the adjusting screw.

Backlash between sector gear and ball nut	Factory spec.	0.3 mm 0.012 in.

W10166630

Clearance between Valve Housing and Sleeve

1. Measure the sleeve O.D. with an outside micrometer.
2. Measure the valve housing I.D. with a caliper gauge.
3. If the clearance exceeds the allowable limit, replace the steering gear box assembly.

Clearance between valve housing and spool	Factory spec.	0.17 to 0.28 mm 0.0067 to 0.0110 in.
	Allowable limit	0.4 mm 0.0157 in.

W10285540

Clearance between Gear Box and Ball Nut

1. Measure the gear box cylinder I.D. with a cylinder gauge.
2. Measure the ball nut O.D. with an outside micrometer.
3. If the clearance exceeds the factory specifications, replace the steering gear box assembly.

Clearance between gear box and ball nut	Factory spec.	0.035 to 0.08 mm 0.0013 to 0.0031 in.
	Allowable limit	0.15 mm 0.0059 in.

W10286900

Axial Play of Ball Nut Assembly

1. Set a dial indicator with its finger on the worm shaft of the ball nut assembly.
2. Move the worm shaft axially and measure the play.
3. If the play exceeds the allowable limit, replace the steering gear box assembly.

■ **NOTE**

- **Check ball nut assembly for smooth rotation by holding the ball nut horizontally, and slowly rotating the worm shaft. If rotation is not smooth, replace the steering gear box assembly.**

Axial play of ball nut assembly	Factory spec.	0.02 mm 0.0008 in.
	Allowable limit	0.04 mm 0.0015 in.

W10288320

https://truckmanualshub.com/

8 HYDRAULIC SYSTEM

https://truckmanualshub.com/

MECHANISM

CONTENTS

1. HYDRAULIC CIRCUIT 8-M1
2. POSITION CONTROL VALVE 8-M2
3. HYDRAULIC CYLINDER 8-M4
4. LINKAGE MECHANISM 8-M5
   [1] POSITION CONTROL LINKAGE 8-M5
   [2] DRAFT CONTROL LINKAGE 8-M7
5. FRONT HYDRAULIC BLOCK 8-M11

https://truckmanualshub.com/

1. HYDRAULIC CIRCUIT

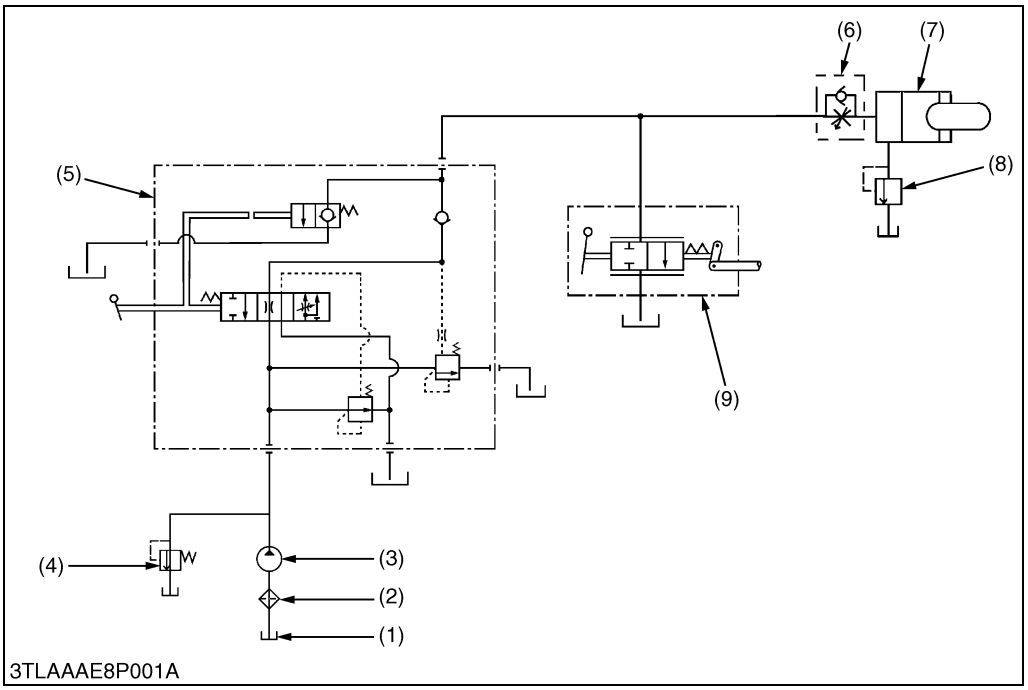

(1) Oil Tank (Transmission Case)
(2) Oil Strainer
(3) Hydraulic Pump
(4) Relief Valve
(5) Position Control Valve
(6) Lowering Speed Adjusting Valve
(7) Hydraulic Cylinder
(8) Cylinder Safety Valve
(9) Draft Control Valve (For Spain, Portugal, Italy, Greece)

W1013324

■ **Hydraulic Oil Flow**

1. When the engine is started, the hydraulic pump (3) is rotated to draw oil from the transmission case (1) through the suction pipe. Supplied oil is filtered by the oil strainer (2).
2. Filtered oil is forced out by the hydraulic pump to the position control valve (5) through the delivery pipe.
3. The position control valve (5) switches the oil flow, and oil is channelled to the hydraulic cylinder (7) for the three-point hydraulic system or returned to the oil tank (transmission case).

- The hydraulic system has a relief valve (4) which restricts the maximum pressure in the circuit.
- The draft control valve (9) enables the use of draft control to maintain a constant traction load.

https://truckmanualshub.com/

2. POSITION CONTROL VALVE

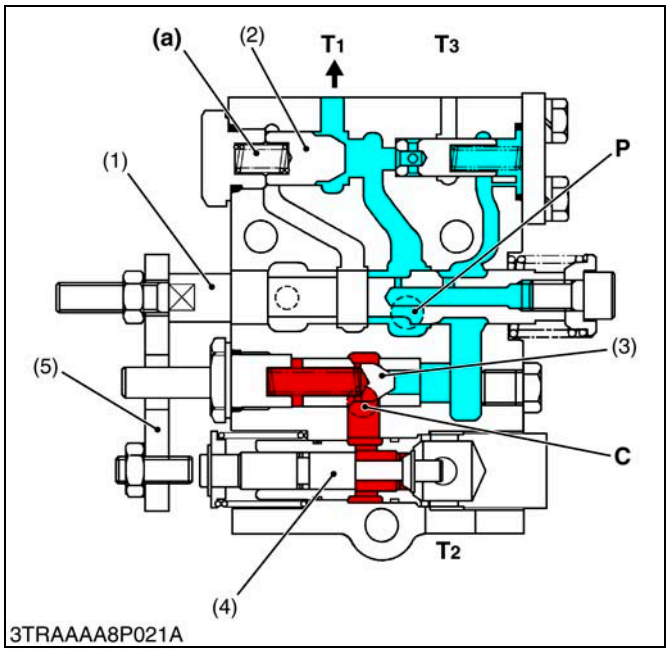

■ Neutral

Pressurized oil flows at the **P** port, pushes open unload poppet (2) and returns to the transmission case from **T1** port.

The oil in the **A** chamber **(a)** behind the unload poppet (2) returns to the transmission case through the clearance between spool (1) and valve body. The oil in the hydraulic cylinder does not flow out because the circuit is cut off by the actions of poppet 1 (3) and poppet 2 (4).

(1) Spool
(2) Unload Poppet
(3) Poppet 1
(4) Poppet 2
(5) Plate

(a) A Chamber
C : C (Cylinder) Port
P : P (Pump) Port
T_1 : T_1 Port (To Transmission Case)
T_2 : T_2 Port (To Transmission Case)
T_3 : T_3 Port (To Transmission Case)

W10161940

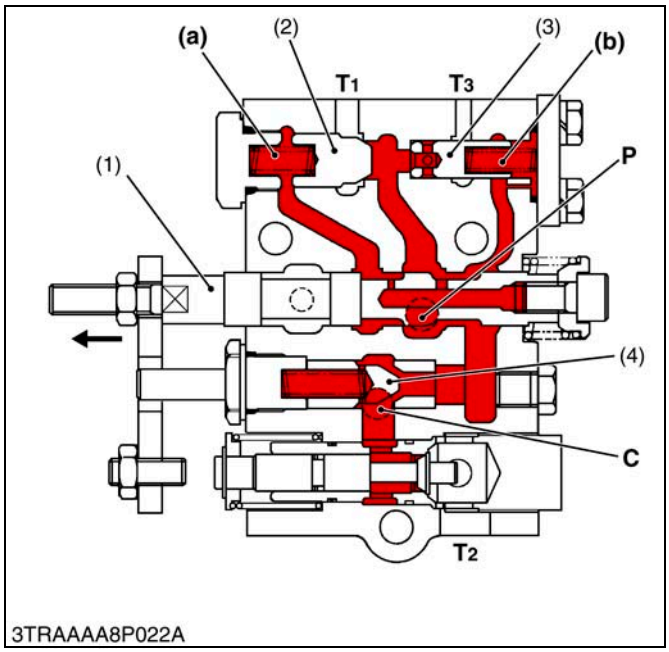

■ Lifting

When the control lever is moved to **UP** position, spool (1) moves to arrow-mark direction. The oil entered **P** port flows into the **A** chamber **(a)**, **B** chamber **(b)** and closes unload poppet (2), poppet 3 (3).

The pressure in the circuit slowly rises, pushing open poppet 1 (4), and the hydraulic oil flows into the hydraulic cylinder from the **C** port, lifting the implement.

(1) Spool
(2) Unload Poppet
(3) Poppet 3
(4) Poppet 1

(a) A Chamber
(b) B Chamber
C : C (Cylinder) Port
P : P (Pump) Port
T_1 : T_1 Port (To Transmission Case)
T_2 : T_2 Port (To Transmission Case)
T_3 : T_3 Port (To Transmission Case)

W10163440

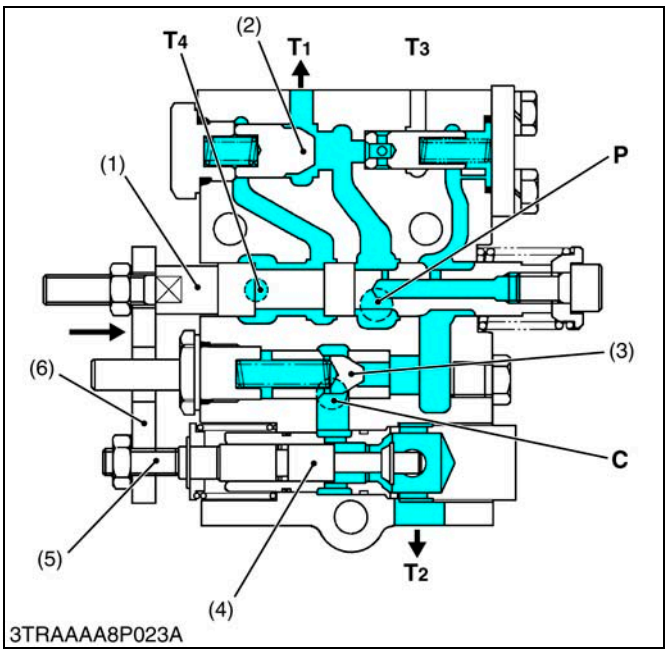

■ Lowering

When the control lever is moved to **DOWN** position, spool (1) moves to arrow-mark direction, and poppet 2 (4) is pushed by set screw (5). As the poppet 2 (4) is pushed, an oil circuit of **C** port to **T2** port is formed.

The oil in the hydraulic cylinder is forced out by the weight of the implement, and returns to the transmission case through the **C** port and **T2** port, lowering the implement. The pressurized oil at the **P** port pushes open unload poppet (2) and returns to the transmission case from **T1** port.

■ Floating

When the control lever is moved all the way to the bottom, spool (1) and poppet 2 (4) remain in the positions described for **"Lowering"**. The oil flows freely between the hydraulic pump, hydraulic cylinder and transmission case.

(1) Spool	**T1 : T1 Port (To Transmission Case)**
(2) Unload Poppet	**T2 : T2 Port (To Transmission Case)**
(3) Poppet 1	**T3 : T3 Port (To Transmission Case)**
(4) Poppet 2	**T4 : T4 Port (To Transmission Case)**
(5) Set Screw	
(6) Plate	
C : C (Cylinder) Port	
P : P (Pump) Port	

W10165370

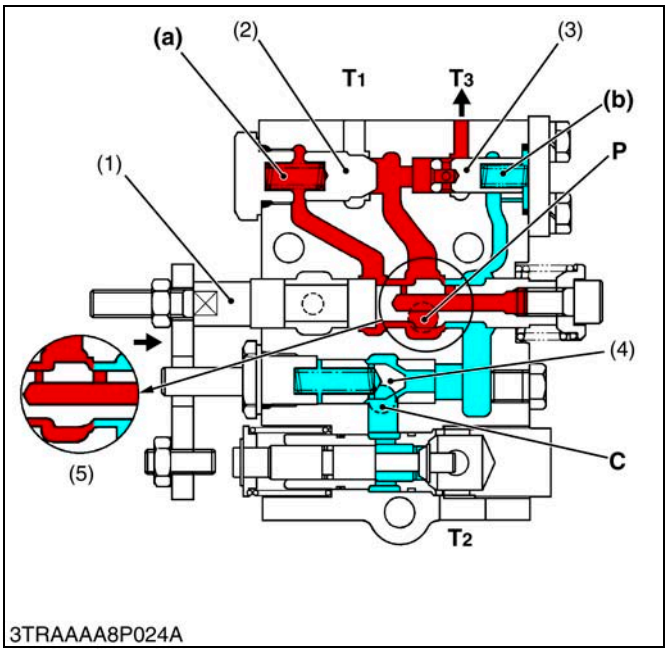

■ Lifting to Neutral

In returning from **Lifting** to **Neutral**, to spool (1) is pushed back to the arrow-mark direction. When the neutral position comes near, the tapered part (5) of the spool (1) makes the pressure difference at the **P** port and **C** port. Therefore, the poppet 1 (4) gradually closes, and absorbs any shock at lifting stop. In that case, since oil remains in the **A** chamber **(a)** behind the unload poppet (2), the unload poppet (2) does not open. However, the poppet 3 (3) opens because of low pressure in **B** chamber **(b)**, and then the oil from the pump returns to the transmission case through **T3** port.

(1) Spool	**C : C (Cylinder) Port**
(2) Unload Poppet	**P : P (Pump) Port**
(3) Poppet 3	**T1 : T1 Port (To Transmission Case)**
(4) Poppet 1	**T2 : T2 Port (To Transmission Case)**
(5) Tapered Part	**T3 : T3 Port (To Transmission Case)**
(a) A Chamber	
(b) B Chamber	

W10166580

https://truckmanualshub.com/

3. HYDRAULIC CYLINDER

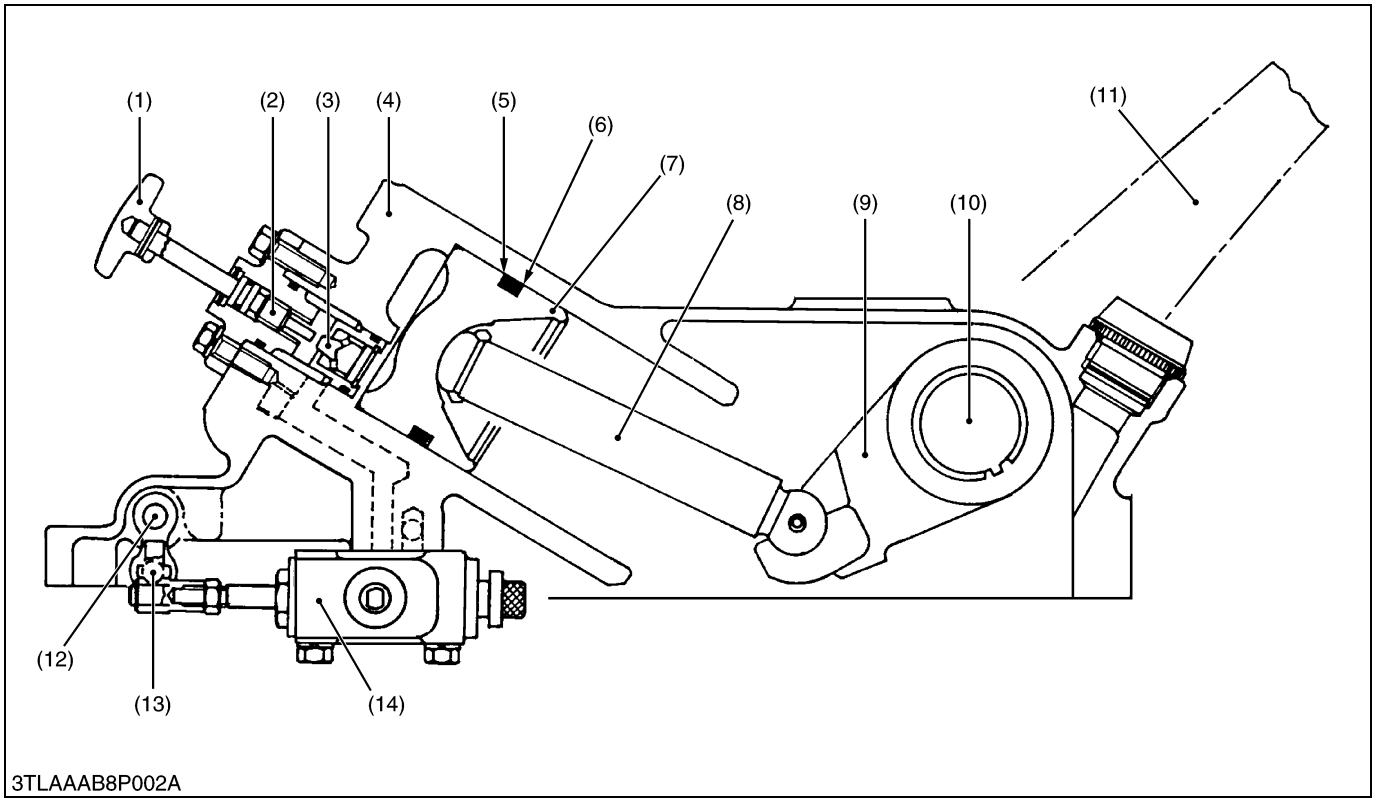

(1) Lowering Speed Adjusting Knob
(2) Lowering Speed Adjusting Shaft
(3) Lowering Speed Adjusting Valve
(4) Hydraulic Cylinder
(5) O-ring
(6) Back-up Ring
(7) Hydraulic Piston
(8) Hydraulic Rod
(9) Hydraulic Arm
(10) Hydraulic Arm Shaft
(11) Lift Arm
(12) Position Control Arm
(13) Spool Drive Lever
(14) Position Control Valve

The main components of the hydraulic cylinder are shown in the figure above.

While the lift arm (11) is rising, oil from the hydraulic pump flows into the hydraulic cylinder (4) through the position control valve (14). Then oil pushes the hydraulic piston (7) out.

While the lift arm (11) is lowering, oil in the hydraulic cylinder (4) is discharged to the transmission case through the position control valve (14) by the weight of the implement. At this time, the lowering speed of the implement can be controlled by the lowering speed adjusting valve (3) attached to the hydraulic cylinder (4). Turning the lowering speed adjusting knob (1) clockwise decreases the lowering speed, and counterclockwise increases lowering speed. When the lowering speed adjusting valve (3) is completely closed, the lift arm (11) is held at its position since oil in the hydraulic cylinder (4) is sealed between the hydraulic piston (7) and the position control valve (14).

https://truckmanualshub.com/

4. LINKAGE MECHANISM

[1] POSITION CONTROL LINKAGE

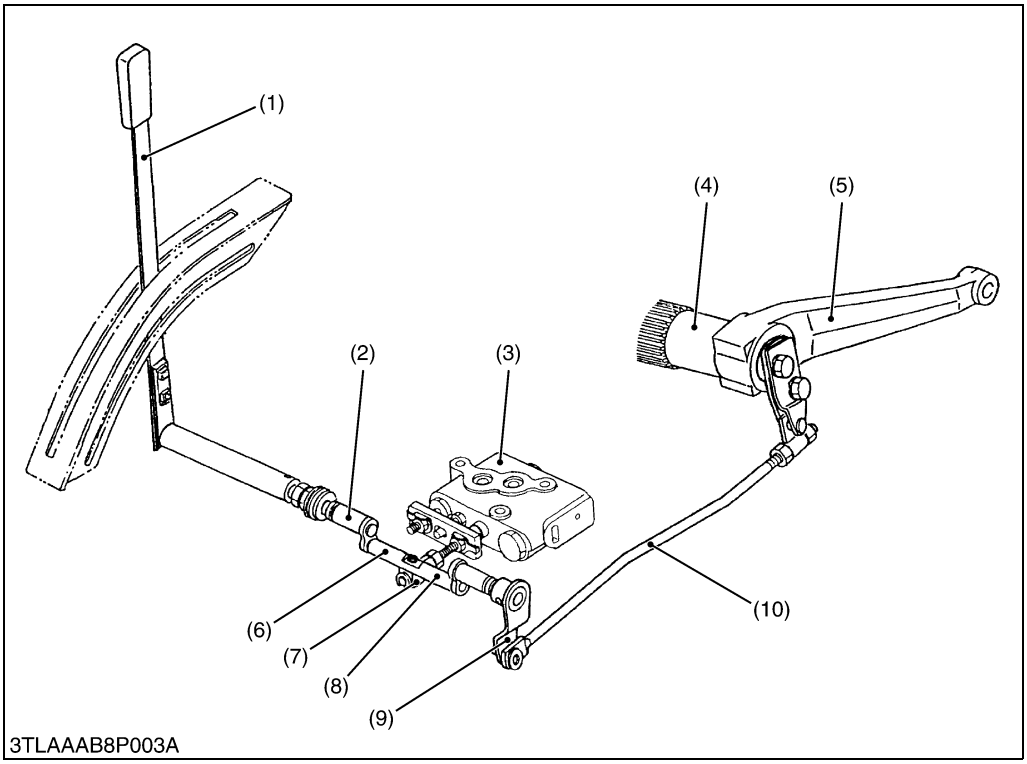

(1) Position Control Lever
(2) Control Arm
(3) Control Valve
(4) Hydraulic Arm Shaft
(5) Lift Arm
(6) Spool Drive Lever
(7) Spool Joint
(8) Feedback Lever Shaft
(9) Feedback Lever
(10) Position Control Rod

W1012963

Position control is a mechanism to raise or lower the implement attached to the tractor in proportion to the movement of the position control lever (1).

The implement can be positioned at any height by moving the position control lever (1). Fine position adjustment is also easy.

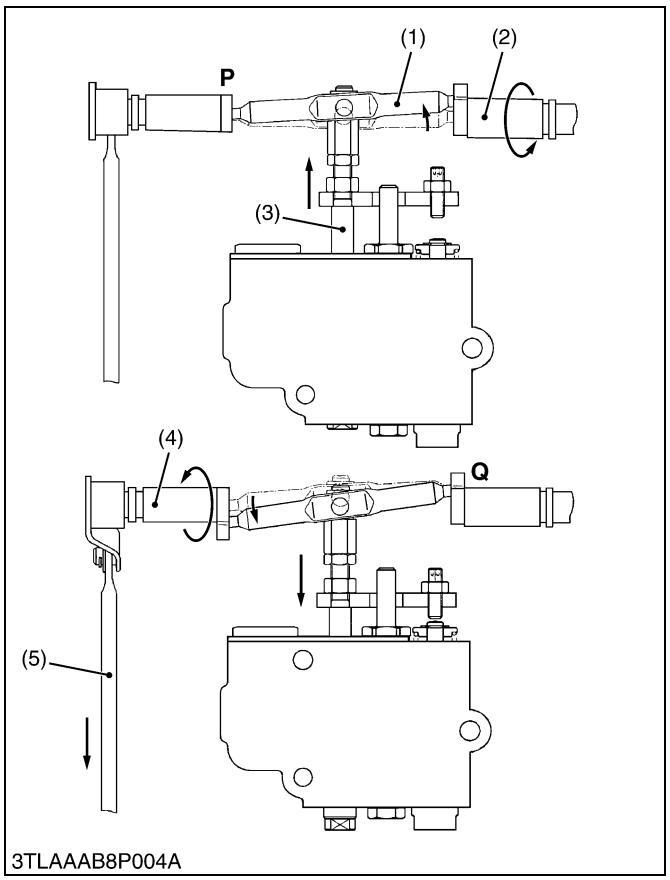

■ **Lifting**

1. When the position control lever is moved to the **LIFT** position, the control arm (2) rotates to the arrow. Therefore, the spool drive lever (1) moves around the fulcrum **P** and pull the spool (3) opening the **LIFT** circuit.
2. When the lift arm moves upward, the feedback lever shaft (4) is rotated to the arrow, since the position control rod (5) is actuated. Therefore, the spool drive lever (1) moves around the fulcrum **Q** and pushes the spool (3).
3. The lift arm stops when the spool (3) returns to the neutral position.

(1) Spool Drive Lever
(2) Control Arm
(3) Spool
(4) Feedback Lever Shaft
(5) Position Control Rod

W1013422

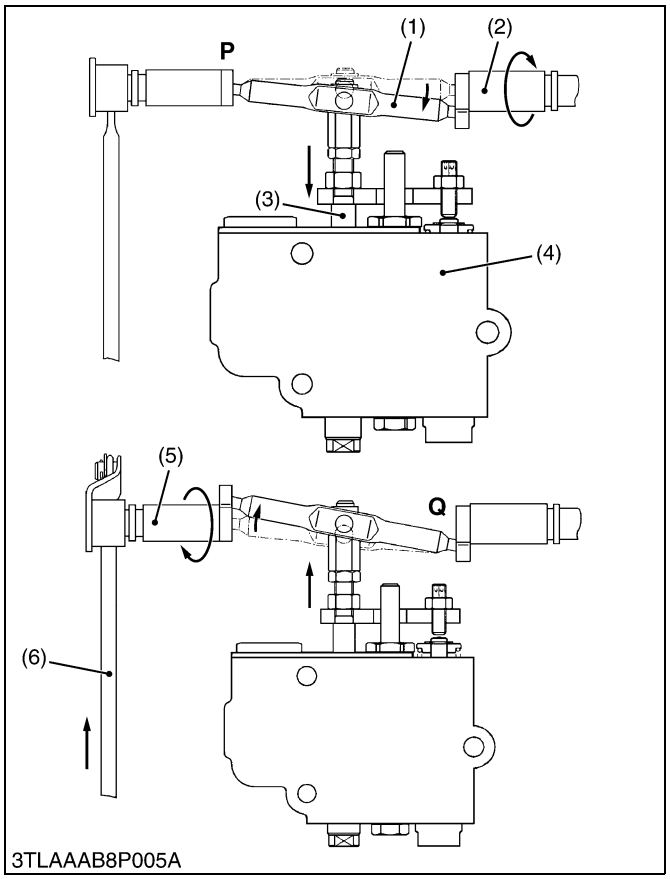

■ **Lowering**

1. When the position control lever is moved to the **DOWN** position, the control arm (2) rotates to the arrow. Therefore, the spool drive lever (1) moves around the fulcrum **P** and pushes the spool (3) opening the **DOWN** circuit.
2. When the lift arm moves downward, the feedback lever shaft (5) is rotated to the arrow, since the position control rod (6) is actuated. Therefore, the spool drive lever (1) moves around the fulcrum **Q** and pulls the spool (3).
3. The lift arm stops when the spool (3) returns to the neutral position.

(1) Spool Drive Lever
(2) Control Arm
(3) Spool
(4) Valve Body
(5) Feedback Lever Shaft
(6) Position Control Rod

W2589746

[2] DRAFT CONTROL LINKAGE

Draft control is a system which maintains a constant traction load, and is suited for the work which needs heavy traction load such as plowing.

The implement is automatically raised when the traction load is increased, and lowers when the traction load is decreased. By maintaining a constant load level, it prevents the tractor from slipping and being loaded excessively. The setting for the traction load can be adjusted by changing the position of the draft control lever.

The draft control system consists of a draft control valve and draft linkage mechanism. The traction load applied to the tractor is sensed and is fed back to the draft control valve by means of the linkage mechanism.

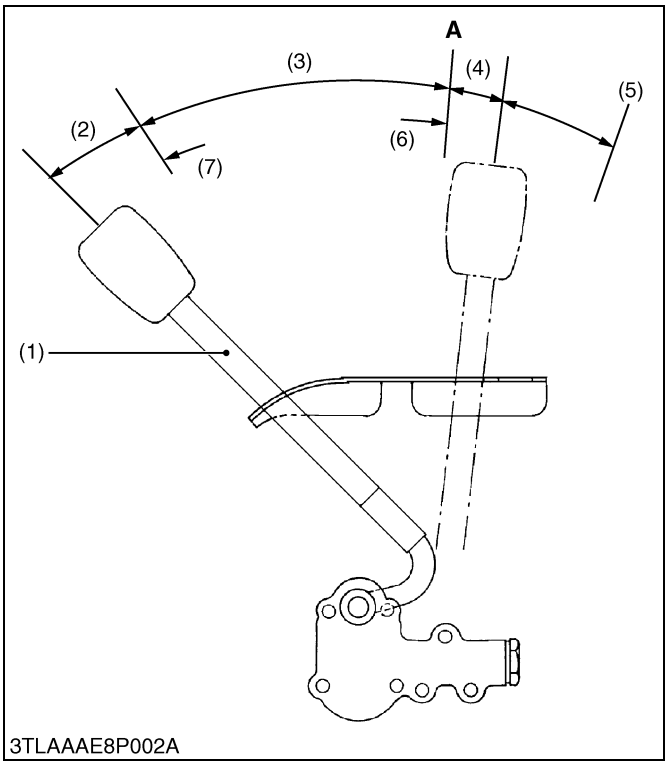

3TLAAAE8P002A

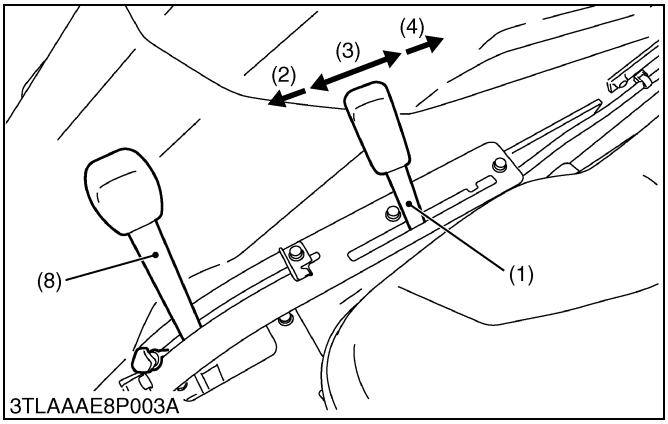

3TLAAAE8P003A

With this type of draft control, operation is as described below according to the position of the draft control lever (1).

1. When the draft control lever is positioned in the floating range (2), the implement lowers to the ground.
2. When the draft control lever is positioned in the draft control range (3), work is performed as follows.
   - As the traction load applied to the tractor from the implement increases, the implement is raised.
   - As the traction load decreases, the implement lowers to the position at which it matches the setting traction load.
3. When the implement is raised as described in 2 above, the force to raise the implement is applied to the rear wheels so that the ground pressure of the wheels is momentarily increased to prevent slippage.
4. When the draft control lever is positioned near **"A"** in the draft control range (3), the implement is raised or lowered according to a slight change in traction load. (This means that the draft control sensitivity is intensified.)

(Reference)

- When the draft control is used, the position control lever (8) must be set at the **LIFT** position to form the lift circuit in the position control valve. Therefore, in this type of draft control, the implement lowest position cannot be controlled by the position control lever (8).

(1) Draft Control Lever	(5) Lock Position
(2) Floating Range	(6) Shallow
(3) Draft Control Range	(7) Deep
(4) Up-Range	(8) Position Control Lever

W1014677

https://truckmanualshub.com/

■ Draft Control Operation

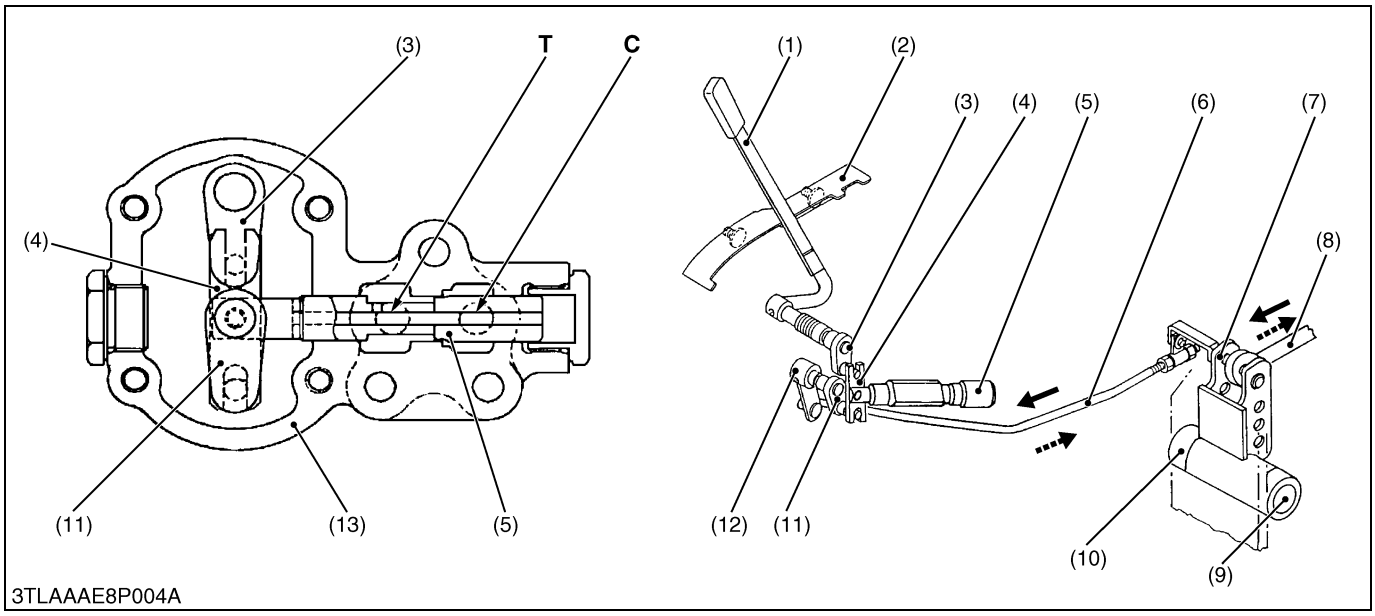

(1) Draft Control Lever
(2) Lever Guide
(3) Control Lever Shaft
(4) Spool Drive Lever
(5) Spool
(6) Draft Control Rod
(7) Top Link Holder
(8) Top Link
(9) Torsion Bar
(10) Top Link Bracket
(11) Feedback Lever Shaft
(12) Feedback Lever
(13) Valve Body

C : C (Cylinder) Port
T : T (Tank) Port

1. The traction load applied to the tractor from the implement acts as a torsional force to the torsion bar (9) via the top link (8) and the top link holder (7). When the torsion bar (9) is twisted, its displacement is transmitted to the draft control valve via the draft control rod (6).
2. When the traction load nearly equals the setting traction load determined by the position of draft control lever (1), the oil passage to the transmission case is restricted to generate the constant oil pressure in the hydraulic cylinder. (Neutral)
   Therefore the position of the implement is maintains.

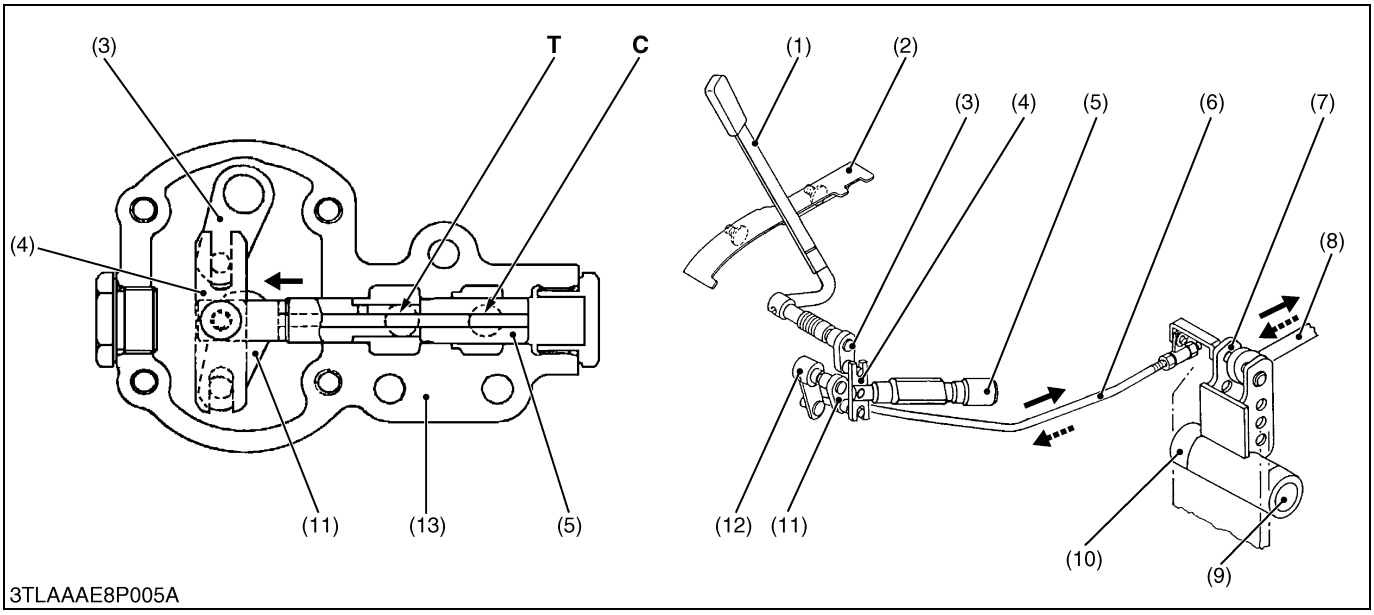

(1) Draft Control Lever
(2) Lever Guide
(3) Control Lever Shaft
(4) Spool Drive Lever
(5) Spool
(6) Draft Control Rod
(7) Top Link Holder
(8) Top Link
(9) Torsion Bar
(10) Top Link Bracket
(11) Feedback Lever Shaft
(12) Feedback Lever
(13) Valve Body

C : C (Cylinder) Port
T : T (Tank) Port

3. When the traction load increases, the torsion bar (9) is twisted, and its displacement is transmitted to the draft control valve via the draft control rod (6). As a result, the spool (5) in the draft control valve is pushed in closing the oil passage to the transmission case, so oil flows into the hydraulic cylinder to raise the implement.
4. As the implement is raised and the traction load decreases, the torsion bar (9) is restored to form a neutral circuit in the draft control valve.

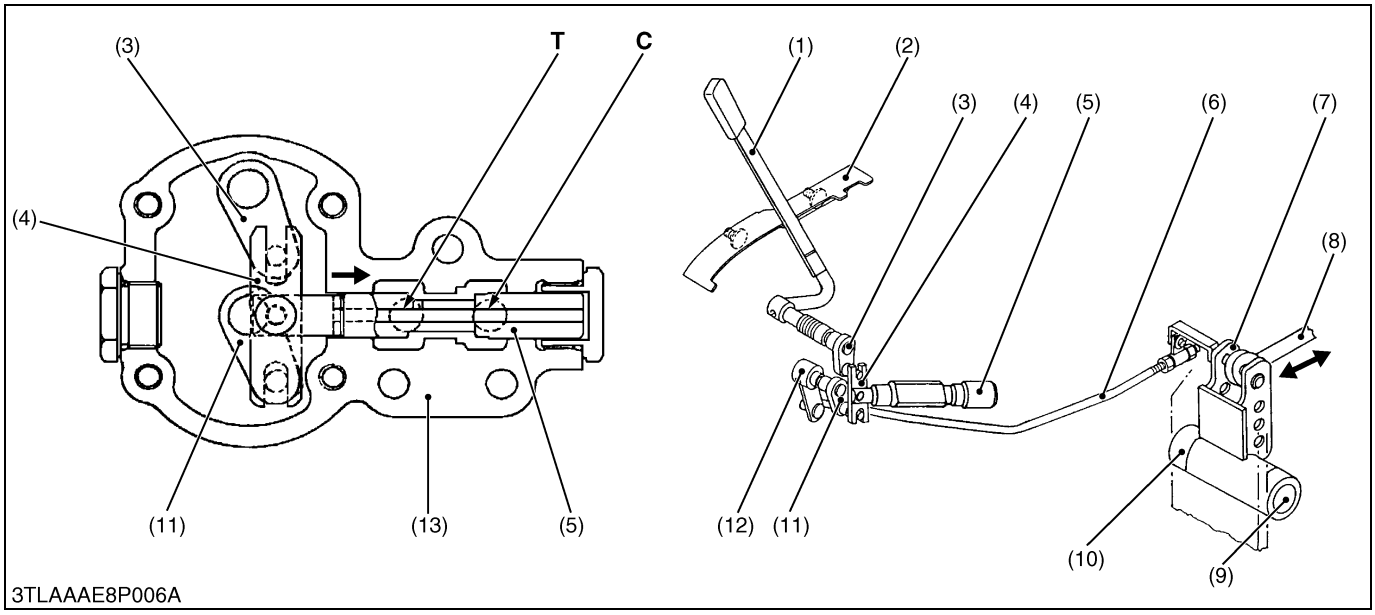

(1) Draft Control Lever
(2) Lever Guide
(3) Control Lever Shaft
(4) Spool Drive Lever
(5) Spool
(6) Draft Control Rod
(7) Top Link Holder
(8) Top Link
(9) Torsion Bar
(10) Top Link Bracket
(11) Feedback Lever Shaft
(12) Feedback Lever
(13) Valve Body

C : C (Cylinder) Port
T : T (Tank) Port

5. When the traction load decreases, the torsion bar (9) is restored and its displacement is transmitted to the draft control valve via the draft control rod (6). As a result, the spool (5) in the draft control valve is pulled out, opening the oil passage to the transmission case. Therefore, the oil in the hydraulic cylinder returns to the transmission case together with the oil from the hydraulic pump, and the implement lowers.
6. As the implement lowers and the traction load increases, the torsion bar (9) is twisted to form a neutral circuit in the draft control valve.

https://truckmanualshub.com/

5. FRONT HYDRAULIC BLOCK

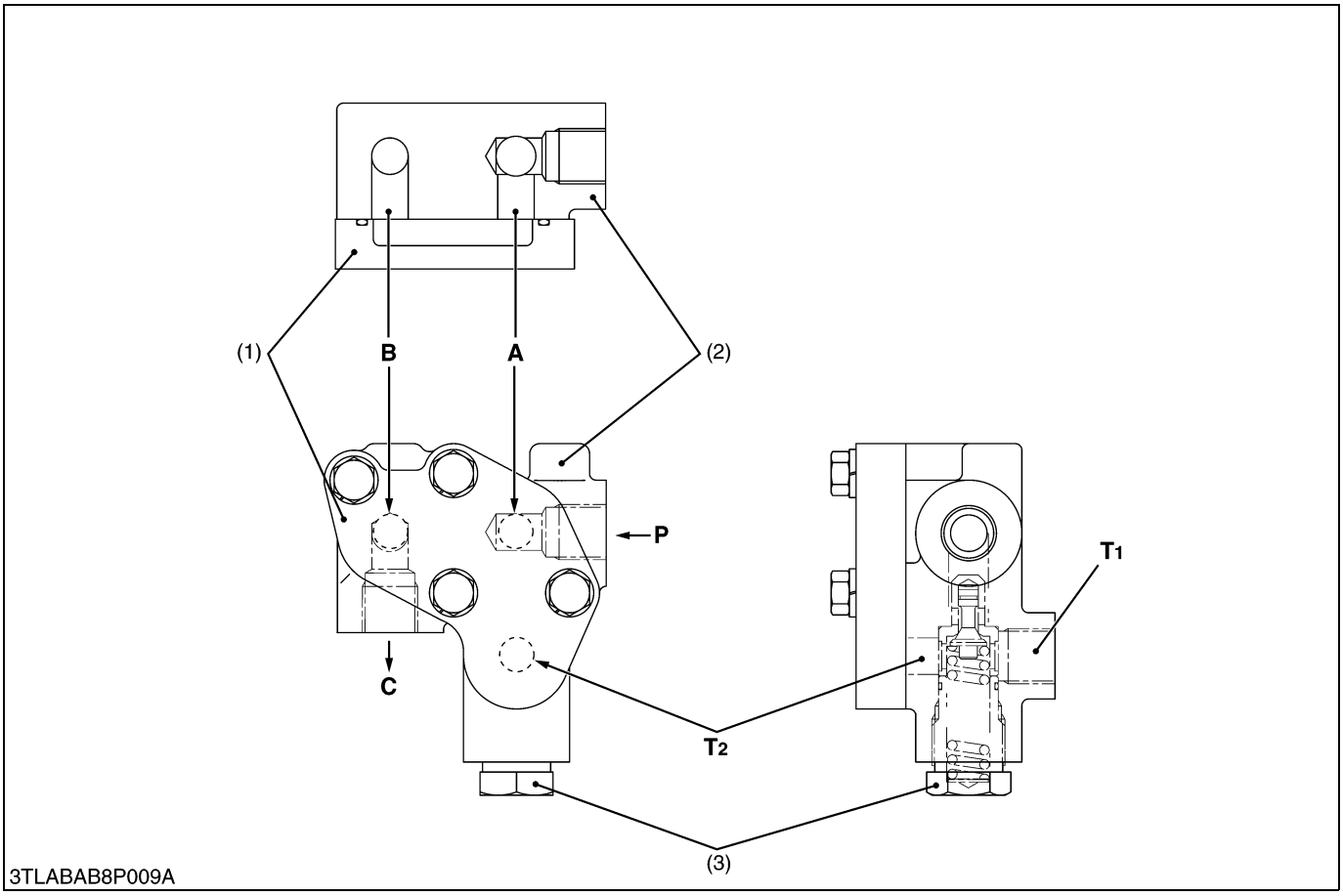

(1) Cap
(2) Front Hydraulic Block
(3) Relief Valve

A : To Implement Control Valve
B : From Implement Control Valve
C : To Position Control Valve
P : From Hydraulic Valve
T_1 : To Transmission Case
T_2 : From Implement Control Valve

The front hydraulic block is provided to take power out from the tractor to operate the hydraulic cylinders on the implement, such as front loader, front blade and so on.

https://truckmanualshub.com/

SERVICING

CONTENTS

1. TROUBLESHOOTING 8-S1
2. SERVICING SPECIFICATIONS 8-S2
3. TIGHTENING TORQUES 8-S5
4. CHECKING, DISASSEMBLING AND ASSEMBLING 8-S6
   [1] CHECKING AND ADJUSTING 8-S6
      (1) Hydraulic Pump Test Using Flow-meter (Power Steering) 8-S6
      (2) Relief Valve (Power Steering) 8-S8
      (3) Hydraulic Pump Test Using Flow-meter (Three Point Hydraulic System) 8-S8
      (4) Relief Valve (for Three Point Hydraulic System) 8-S10
   [2] DISASSEMBLING AND ASSEMBLING 8-S13
      (1) Hydraulic Pump (Power Steering) 8-S13
      (2) Hydraulic Pump (Three point Hydraulic System) 8-S14
      (3) Hydraulic Cylinder 8-S15
      (4) Position Control Valve 8-S19
      (5) Draft Control Valve 8-S21
      (6) Relief Valve 8-S22
   [3] SERVICING 8-S23
      (1) Hydraulic Pump (Power Steering) 8-S23
      (2) Hydraulic Pump (Three Point System) 8-S24
      (3) Hydraulic Cylinder 8-S25

https://truckmanualshub.com/

1. TROUBLESHOOTING

Symptom	Probable Cause	Solution	Reference Page
Implement Does Not Rise (Without Noise)	Control linkage improperly adjusted	Adjust	8-S11, S12
	Control linkage improperly assembled or damaged	Repair or replace	8-S11, S12, S19, S20
	Position control valve malfunctioning (unload poppet, spool, poppet 1, 2)	Repair or replace	8-S19, S20
	Relief valve spring weaken or broken	Replace	8-S22
Implement Does Not Rise (With Noise)	Hydraulic piston O-ring, cylinder damaged	Replace	8-S17
	Relief valve setting pressure too low	Adjust	8-S10
	Hydraulic pump malfunctioning	Repair or replace	8-S9
Implement Does Not Reach Maximum Height	Position control rod improperly adjusted	Adjust	8-S11
	Position control valve spool joint 1 improperly adjusted	Adjust	8-S19, S20
	Hydraulic arm shaft, hydraulic arm, lift arm improperly assembled	Adjust	8-S18
Implement Does Not Lower	Control valve malfunctioning (Spool damaged)	Replace	8-S19, S20
	Poppet valve adjusting nut improperly adjusted	Adjust	8-S19, S20
Implement Drops by Weight	Hydraulic cylinder worn or damaged	Replace	8-S25
	Hydraulic piston and O-ring worn or damaged	Replace	8-S17
	Poppet 1 seat surface damaged (control valve)	Replace	8-S19, S20
	Poppet 1 O-ring damaged (control valve)	Replace	8-S19, S20
	Poppet 2 seat surface damaged (control valve)	Replace	8-S19, S20
	Poppet 2 O-ring damaged (control valve)	Replace	8-S19, S20
	Pompet 3 seat surface damaged (control valve)	Replace	8-S19, S20
	Pompet 3 O-ring damaged (control valve)	Replace	8-S19, S20
Implement Hunts (Moves Up and Down)	Poppet 1, poppet 2, poppet 3 seat surface damaged	Replace	8-S19, S20
	Control valve O-rings worn or damaged	Replace	8-S19
	Pompet 2 adjusting nut improperly adjusted	Adjust	8-S19, S20
Draft Control Malfunctioning	Draft control valve malfunctioning	Replace	8-S21
	Draft control linkage improperly adjusted	Adjust	8-S21
	Torsion bar weaken or broken	Replace	–
Oil Temperature Increases Rapidly	Relief valve operating	Adjust	8-S10
	Hydraulic pump leak or damaged	Repair or replace	8-S9
	Oil leaks from valves	Repair or replace	8-S19, S20
	Gear or bearing damaged in the transmission case	Replace	–

W1014322

2. SERVICING SPECIFICATIONS

POWER STEERING HYDRAULIC PUMP

Item		Factory Specification	Allowable Limit
Hydraulic Pump **Condition** • Engine speed : Approx. 2500 min^{-1} (rpm) • Rated Pressure : 11.1 to 12.1 MPa 113 to 123 kgf/cm^2 1607 to 1749 psi • Oil Temperature : 40 to 60 °C 104 to 140 °F	Delivery at No Pressure Delivery at Rated Pressure	Above 14.5 L/min. 3.83 U.S.gals/min. 3.19 Imp.gals/min. Above 13.5 L/min. 3.57 U.S.gals/min. 2.97 Imp.gals/min.	– 13.1 L/min. 3.46 U.S.gals./min. 2.88 Imp.gals./min.
Housing Bore	Depth of Scratch	–	0.09 mm 0.0035 in.
Bushing to Gear Shaft	Clearance	0.020 to 0.081 mm 0.0008 to 0.0032 in.	0.15 mm 0.0059 in.
Gear Shaft	O.D.	14.970 to 14.980 mm 0.5894 to 0.5898 in.	–
Bushing	I.D.	15.000 to 15.051 mm 0.5906 to 0.5926 in.	–
Side Plate	Thickness	2.48 to 2.50 mm 0.0976 to 0.0984 in.	2.40 mm 0.0945 in.

W1013874

RELIEF VALVE (POWER STEERING)

Relief Valve **Condition** • Engine Speed : Maximum • Oil Temperature : 40 to 60 °C 104 to 140 °F	Setting Pressure	11.1 to 12.1 MPa 113 to 123 kgf/cm^2 1607 to 1749 psi	–

W1013874

THREE POINT SYSTEM HYDRAULIC PUMP

Item		Factory Specification	Allowable Limit
Hydraulic Pump **Condition** • Engine speed : Approx. 2500 min^{-1} (rpm) • Rated Pressure : 15.7 to 16.7 MPa 160 to 170 kgf/cm^2 2275 to 2417 psi • Oil Temperature : 40 to 60 °C 104 to 140 °F	Delivery at No Pressure Delivery at Rated Pressure	Above 23.9 L/min. 6.31 U.S.gals./min. 5.26 Imp.gals./min. Above 22.2 L/min. 5.87 U.S.gals./min. 4.88 Imp.gals./min.	– 21.5 L/min. 5.68 U.S.gals./min. 4.73 Imp.gals./min.
Housing Bore	Depth of Scratch	–	0.09 mm 0.0035 in.
Bushing to Gear Shaft	Clearance	0.020 to 0.081 mm 0.0008 to 0.0032 in.	0.15 mm 0.0059 in.
Gear Shaft	O.D.	14.970 to 14.980 mm 0.5894 to 0.5898 in.	–
Bushing	I.D.	15.000 to 15.051 mm 0.5906 to 0.5926 in.	–
Side Plate	Thickness	2.48 to 2.50 mm 0.0976 to 0.0984 in.	2.40 mm 0.0945 in.

W1012055

RELIEF VALVE (THREE POINT SYSTEM)

Relief Valve **Condition** • Engine Speed : Maximum • Oil Temperature : 40 to 60 °C 104 to 140 °F	Setting Pressure	15.7 to 16.7 MPa 160 to 170 kgf/cm^2 2275 to 2417 psi	–

W1012295

CYLINDER SAFETY VALVE

Cylinder Safety Valve	Operating Pressure	19.6 to 22.6 MPa 200 to 230 kgf/cm^2 2845 to 3277 psi	–

W1029624

CONTROL LINKAGE

Lift Arm	Free Play (at Maximum Raising Position)	10 to 15 mm 0.39 to 0.58 in.	–

W1013874

HYDRAULIC CYLINDER

Item		Factory Specification	Allowable Limit
Cylinder Bore	I.D.	75.000 to 75.050 mm 2.9528 to 2.9547 in.	71.150 mm 2.9587 in.
Hydraulic Arm Shaft to Bushing	Clearance (Right)	0.125 to 0.230 mm 0.00492 to 0.00906 in.	0.50 mm 0.0197 in.
	Clearance (Left)	0.125 to 0.220 mm 0.00492 to 0.00866 in.	0.50 mm 0.0197 in.
Hydraulic Arm Shaft	O.D. (Right)	44.920 to 44.950 mm 1.76850 to 1.76968 in.	–
	O.D. (Left)	39.920 to 39.950 mm 1.57165 to 1.57283 in.	–
Bushing	I.D. (Right)	45.0756 to 45.150 mm 1.77460 to 1.77756 in.	–
	I.D. (Right)	40.075 to 40.140 mm 1.57775 to 1.58031 in.	–

W1011871

https://truckmanualshub.com/

3. TIGHTENING TORQUES

Tightening torques of screws, bolts and nuts on the table below are especially specified.
(For general use screws, bolts and nuts : See page G-7.)

Item	N·m	kgf·m	ft-lbs
Relief valve plug	49.0 to 68.6	5.0 to 7.0	36.2 to 50.6
Hydraulic pump mounting bolt	23.5 to 27.5	2.4 to 2.8	17.4 to 20.3
Delivery pipe joint bolt	49.0 to 69.0	5.0 to 7.0	36.1 to 50.6
Pump cove mounting screw	39.2 to 44.1	4.0 to 4.5	28.9 to 32.5
Hydraulic cylinder mounting screw and nut	77.4 to 90.2	7.9 to 9.2	57.1 to 66.5
Hydraulic cylinder assembly mounting stud bolt	38.2 to 45.1	3.9 to 4.6	28.2 to 33.3
Position control valve mounting screw	23.6 to 27.4	2.4 to 2.8	17.4 to 20.2
Position control valve seat plug 1 and 2	29.4 to 49.0	3.0 to 5.0	21.7 to 36.2
Poppet lock nut	3.9 to 6.9	0.4 to 0.7	2.9 to 5.1
Position control valve unload plug	39.2 to 58.5	4.0 to 6.0	28.9 to 43.4

W1012736

4. CHECKING, DISASSEMBLING AND ASSEMBLING

[1] CHECKING AND ADJUSTING

(1) Hydraulic Pump Test Using Flow-meter (Power Steering)

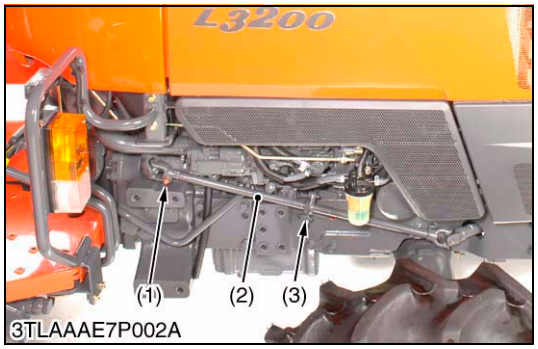

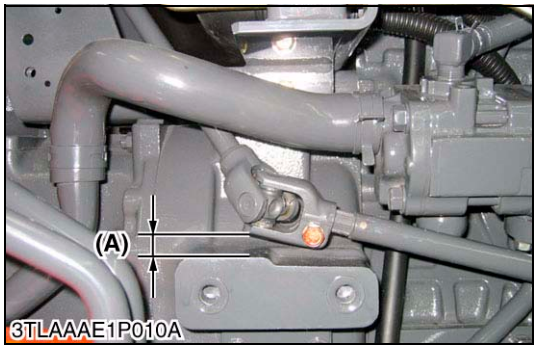

Preparation

1. Remove the support (3) mounting screw.
2. Remove the screw (1).
3. Remove the joint shaft (2).

(When reassembling)

- Lift the universal joint so that there is a clearance **(A)** of more than 5 mm (0.19 in.) between the universal joint and flywheel housing. Then fit the support (3) in position.

(1) Screw
(2) Joint Shaft
(3) Support

(A) Clearance

W1012497

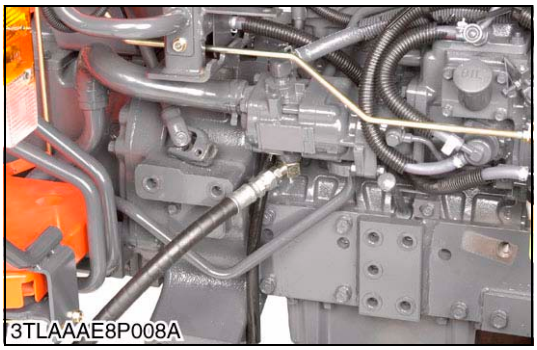

Hydraulic Flow Test

■ **IMPORTANT**

- **When using a flowmeter other than KUBOTA specified flowmeter, be sure to use the instructions with that flowmeter.**
- **Do not close the flowmeter loading valve completely, before testing, because it has no relief valve.**

1. Remove the power steering delivery pipe joint bolt and install the adaptor **52** to the pump discharge port.
2. Connect the hydraulic test hose to the adaptor **52** and flowmeter inlet port.
3. Connect the other hydraulic test hose to the flowmeter outlet port and to transmission fluid filling plug hole.
4. Open the flowmeter loading valve completely. (Turn counterclockwise.)
5. Start the engine and set the engine speed at **2000 to 2200 min^{-1} (rpm)**.
6. Slowly close the loading valve to generate pressure approx. **9.8 MPa (100 kgf/cm^2, 1422 psi)**. Hold in this condition until oil temperature reached approx. **40 °C (104 °F)**
7. Open the loading valve completely.
8. Set the engine speed. (Refer to **Condition**.)
9. Read and note the pump delivery at no pressure.
10. Slowly close the loading valve to increase pressure (Rated pressure). As the load is increased, engine speed drops, therefore, reset the engine speed.
11. Read and note the pump delivery at rated pressure.
12. Open the loading valve completely and stop the engine.
13. If the pump delivery does not reach the allowable limit, check the pump suction line, oil filter or hydraulic pump.

Condition

- Engine speed : Approx. 2500 min^{-1} (rpm)
- Rated pressure : 11.1 to 12.1 MPa
  113 to 123 kgf/cm^2
  1607 to 1749 psi
- Oil temperature : 40 to 60 °C (104 to 140 °F)

Hydraulic pump delivery at no pressure	Factory spec.	Above 14.5 L/min. 3.83 U.S.gals/min. 3.19 Imp.gals/min.
Hydraulic pump delivery at rated pressure	Factory spec.	Above 13.5 L/min. 3.57 U.S.gals/min. 2.97 Imp.gals/min.
	Allowable limit	13.1 L/min. 3.46 U.S.gals/min. 2.88 Imp.gals/min.

W1018791

(2) Relief Valve (Power Steering)

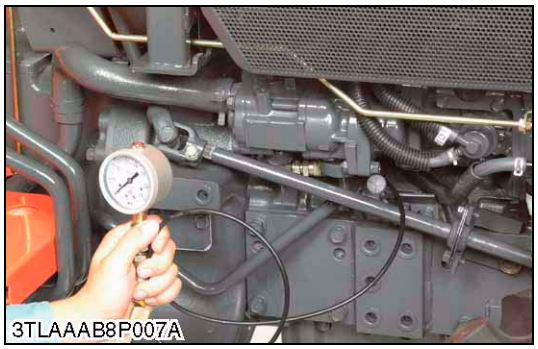

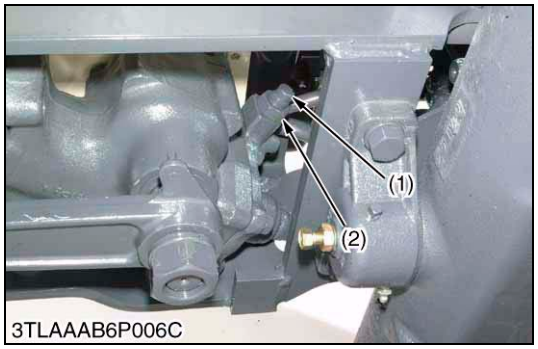

Relief Valve Setting Pressure

1. Disconnect the power steering delivery pipe joint bolt.
2. Install the adaptor **E** and adaptor **58** of relief valve setting pressure tester to the regulator valve, and then connect the threaded coupler of the test hose and pressure gauge.
3. Start the engine and set the engine speed at max. speed.
4. Fully turn the steering wheel to the left or right and read the pressure when the relief valve functions.
5. Stop the engine.
6. If the pressure is not within the factory specifications, check the pump delivery line, adjust the relief valve by the adjusting screw (1), or repair the power steering.

Power steering relief valve setting pressure	Factory spec.	11.1 to 12.1 MPa 113 to 123 kgf/cm^2 1607 to 1749 psi

(Reference)

- One quarter turn of the adjusting screw (1) changes the relief setting pressure by approx. 1.27 MPa (13 kgf/cm^2, 185 psi).

Tightening torque	Power steering delivery hose joint bolt	34.0 to 39.0 N·m 3.5 to 4.0 kgf·m 25.3 to 28.9 ft-lbs

Condition

- Engine speed : Maximum
- Oil temperature : 40 to 60 °C (104 to 140 °F)

(1) Adjusting Screw
(2) Lock Nut

W1022630

(3) Hydraulic Pump Test Using Flow-meter (Three Point Hydraulic System)

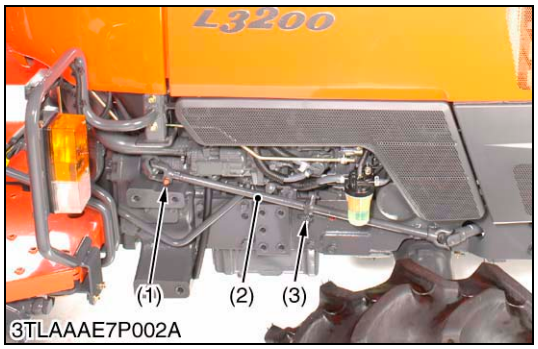

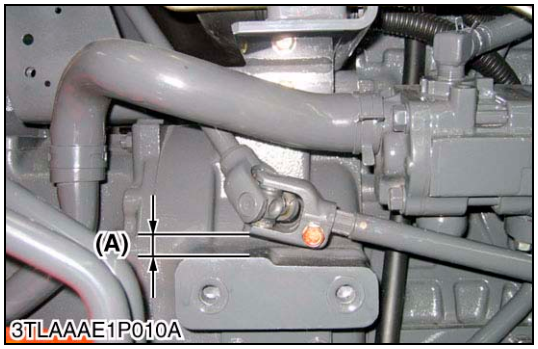

Preparation

1. Remove the support (3) mounting screw.
2. Remove the screw (1).
3. Remove the joint shaft (2).

(When reassembling)

- Lift the universal joint so that there is a clearance **(A)** of more than 5 mm (0.19 in.) between the universal joint and flywheel housing. Then fit the support (3) in position.

(1) Screw
(2) Joint Shaft
(3) Support
(A) Clearance

W1019191

Hydraulic Flow Test

■ **IMPORTANT**

- **When using a flowmeter other than KUBOTA specified flowmeter, be sure to use the instructions with that flowmeter.**
- **Do not close the flowmeter loading valve completely, before testing, because it has no relief valve.**

1. Install the pump adaptor (see page G-39) with O-ring to the pump discharge port.
2. Connect the hydraulic test hose to the adaptor and flowmeter inlet port.
3. Connect the other hydraulic test hose to the flowmeter outlet port and to transmission fluid filling plug hole.
4. Open the flowmeter loading valve completely. (Turn counterclockwise.)
5. Start the engine and set the engine speed at **2000 to 2200 min^{-1} (rpm)**.
6. Slowly close the loading valve to generate pressure approx. **14.7 MPa (150 kgf/cm^2, 2133 psi)**. Hold in this condition until oil temperature reached approx. **40 °C (104 °F)**
7. Open the loading valve completely.
8. Set the engine speed. (Refer to **Condition**.)
9. Read and note the pump delivery at no pressure.
10. Slowly close the loading valve to increase pressure (Rated pressure). As the load is increased, engine speed drops, therefore, reset the engine speed.
11. Read and note the pump delivery at rated pressure.
12. Open the loading valve completely and stop the engine.
13. If the pump delivery does not reach the allowable limit, check the pump suction line, oil filter or hydraulic pump.

Condition

- Engine speed : Approx. 2500 min^{-1} (rpm)
- Rated pressure : 15.7 to 16.7 MPa
  160 to 170 kgf/cm^2
  2275 to 2417 psi
- Oil temperature : 40 to 60 °C (104 to 140 °F)

Hydraulic pump delivery at no pressure	Factory spec.	Above 23.9 L/min. 6.31 U.S.gals/min. 5.26 Imp.gals/min.
Hydraulic pump delivery at rated pressure	Factory spec.	Above 22.2 L/min. 5.87 U.S.gals/min. 4.88 Imp.gals/min.
	Allowable limit	21.5 L/min. 5.68 U.S.gals/min. 4.73 Imp.gals/min.

W1014546

(4) Relief Valve (for Three Point Hydraulic System)

3TLAAAE8P011A

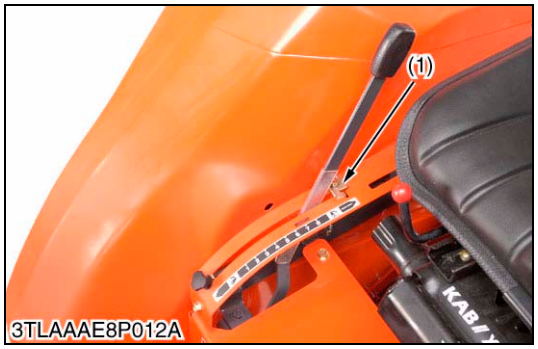

3TLAAAE8P012A

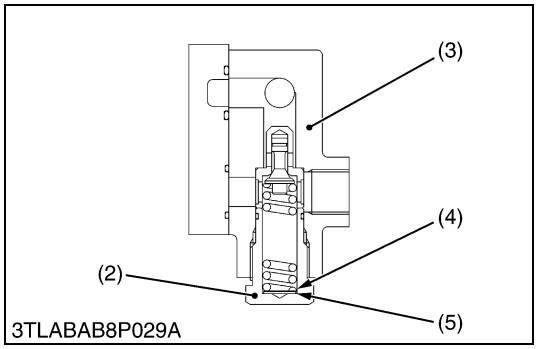

3TLABAB8P029A

Relief Valve Setting Pressure

1. Remove the delivery pipe joint bolt from front hydraulic block.
2. Install the adaptor **E**. Then connect the hose and pressure gauge to adaptor **E**.
3. Remove the position control lever stopper (1).
4. Start the engine and set at maximum speed.
5. Move the position control lever all way up to operate the relief valve and read the gauge.
6. If the pressure is not within the factory specifications, remove the relief plug (2) of front hydraulic block (3) and adjust with the adjusting shims (4).
7. After the relief valve setting pressure test, reset the position control lever stopper firmly.

Relief valve setting pressure	Factory spec.	15.7 to 16.7 MPa 160 to 170 kgf/cm^2 2275 to 2417 psi

Condition

- Engine speed : Maximum
- Oil temperature : 40 to 60 °C (104 to 140 °F)

(Reference)

- Thickness of shims (4) :
  0.1 mm (0.0039 in.)
  0.2 mm (0.0079 in.)
  0.4 mm (0.0157 in.)
- Pressure change per
  0.1 mm (0.0039 in.) shim :
  Approx. 264.8 kPa
  2.7 kgf/cm^2
  38.4 psi

(1) Stopper
(2) Relief Plug
(3) Front Hydraulic Block
(4) Adjusting Shim
(5) Washer

W65478932

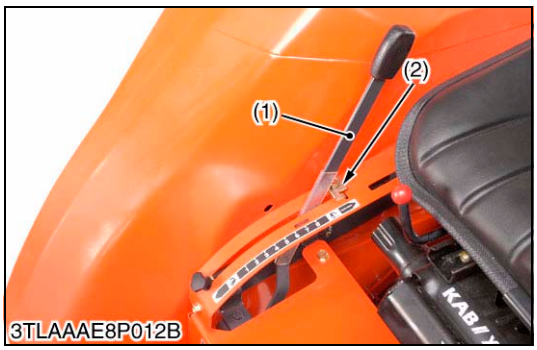

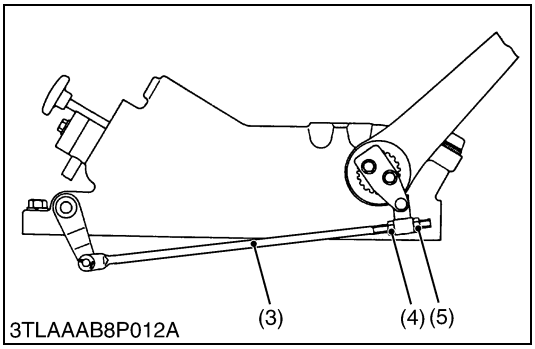

Position Control Feedback Rod Adjustment

1. Set the position control lever (1) to the lowest position.
2. Start the engine, and after warming-up, set the engine speed to idle.
3. Move the position control lever (1) to the uppermost position.
4. While pushing the feedback rod forward, turn the adjusting nut (4) counterclockwise until the relief valve begins to be operated.
5. From the relief valve operating position, turn the adjusting nut (4) clockwise 2 turns.
6. Tighten the lock nut (5).
7. Set the engine speed at the maximum.
8. Move the position control lever (1) to the lowest position and uppermost position to check the relief valve does not operate.
9. Set the position control lever (1) to the uppermost position, then move the lift arm to the upper end by hand and measure the free play.
10. If the measurement is not within the factory specifications, adjust the position control feedback rod setting length.
    To reduce lift arm free play → Lengthen the position control feedback rod (3).
    To increase lift arm free play → Shorten the position control feedback rod (3).

Lift arm free play at maximum raising position	Factory spec.	10 to 15 mm 0.39 to 0.58 in.

(1) Position Control Lever
(2) Stopper
(3) Position Control Feedback Rod
(4) Adjusting Nut
(5) Lock Nut

W1020369

https://truckmanualshub.com/

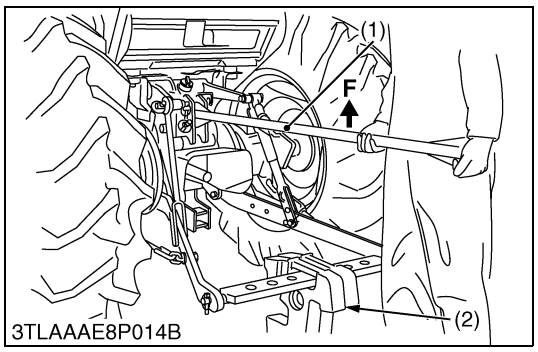

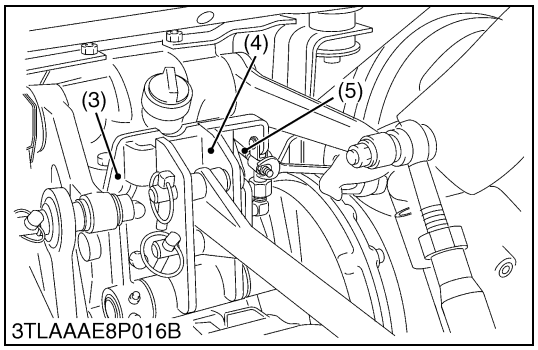

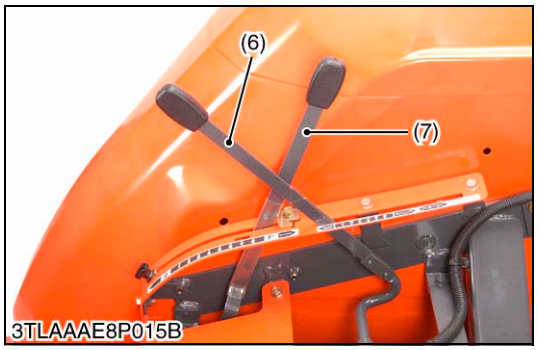

Draft Control Rod Adjustment

1. Attach the weights (2) of 490 N (50 kgf, 110 lbs) to the end of lower link or linkage drawbar.
2. Start the engine, and after warming-up, set the engine speed at maximum.
3. Set the position control lever to the **LIFT** position. And set the draft control lever to the lowest position.
4. Attach the test bar (1) (See page G-42) to the top link holder (4).
5. Pull up the test bar (1) upward until the top link holder (4) comes in contact with the top link bracket (3).
6. In this condition, check the following.
   - When the draft control lever is set to the **DEEP** position on the lever guide label, lower links should not rise.
   - When the draft control lever is moved to the **1** position, lower links should begin to rise.
7. If the operations described above 6 can not be obtained, adjust the draft control rod length by turning the adjusting nut.
8. After adjustment, tighten the lock nut firmly.

(1) Test Bar
(2) Weights
(3) Top Link Bracket
(4) Top Link Holder
(5) Draft Control Rod
(6) Draft Control Lever
(7) Position Control Lever

F : Force

W1020380

[2] DISASSEMBLING AND ASSEMBLING

(1) Hydraulic Pump (Power Steering)

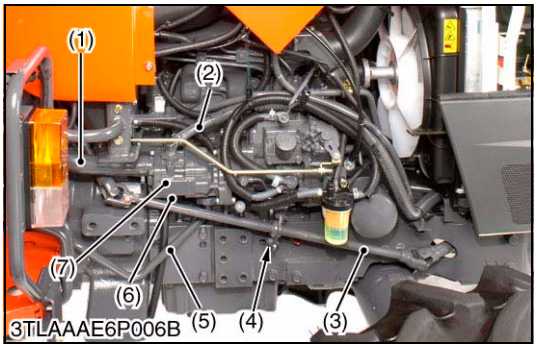

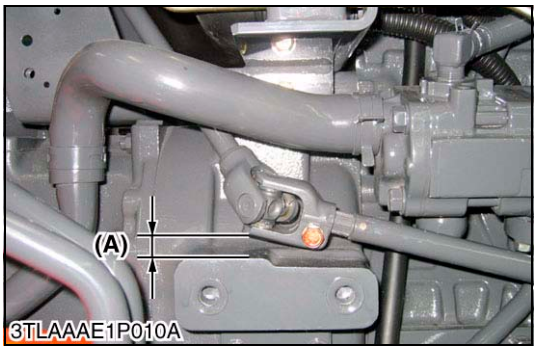

Hydraulic Pump Assembly

1. Remove the side cover.
2. Remove the steering joint shaft (3).
3. Disconnect the suction hose (1).
4. Disconnect the return hose (2).
5. Remove the delivery pipe (5), (6).
6. Remove the hydraulic pump (7).

(When reassembling)

- Lift the universal joint so that there is a clearance **(A)** of more than 5 mm (0.19 in.) between the universal joint and flywheel housing. Then fit the support (4) in position.
- Apply grease to the O-ring and take care not to damage it.

Tightening torque	Delivery pipe joint bolt	49 to 69 N·m 5.0 to 7.0 kgf·m 36.1 to 50.6 ft-lbs
	Hydraulic pump assembly mounting screw and nut	23.5 to 27.5 N·m 2.4 to 2.8 kgf·m 17.4 to 20.3 ft-lbs

(1) Suction Hose
(2) Return Hose
(3) Joint Shaft
(4) Support
(5) Delivery Pipe
(6) Delivery Pipe
(7) Hydraulic Pump

(A) Clearance

W1018543

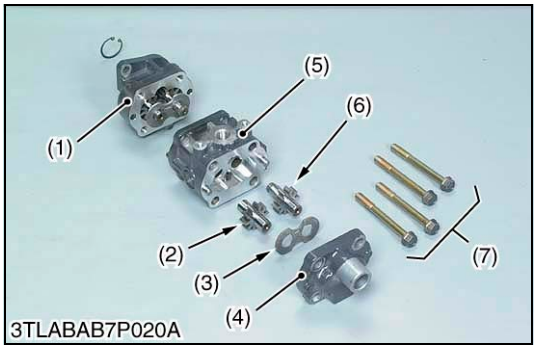

Hydraulic Pump Assembly

1. Remove the pump cover mounting screw (7).
2. Remove the drive gear (6), driven gear (2) and side plate (3) from the casing.

(When reassembling)

- Take care not to damage the gasket.
- Align the hole of the pump cover (4) and casing 2 (5).
- Install the side plate, noting its location and direction.
- Install the gears, noting its direction.

Tightening torque	Pump cover mounting screw	39.2 to 44.1 N·m 4.0 to 4.5 kgf·m 28.9 to 32.5 ft-lbs

(1) Casing 1
(2) Driven Gear
(3) Side Plate
(4) Pump Cover
(5) Casing 2
(6) Drive Gear
(7) Screw

W1016911

Hydraulic Pump Running-in

After reassembly, perform break-in operation in the following manner, and check the pump for abnormality before use. If the pump temperature should rise noticeably during running-in, recheck should be performed.

1. Install the hydraulic pump to the tractor, and mount the suction pipe and delivery pipe securely.
2. Set the engine speed at 1300 to 1500 mm^{-1} (rpm), and operate the hydraulic pump at no load for about 10 minutes.
3. Set the engine speed at 2000 to 2200 mm^{-1} (rpm), and with the hydraulic pump applied with 2.94 MPa (30 kgf/cm^2, 427 psi) to 4.90 MPa (50 kgf/cm^2, 711 psi) pressure, operate it for approx. 15 minutes.
4. With the engine set to maximum speed, fully turn the steering wheel to the left or right, then actuate the relief valve five times for 25 seconds (one time 5 seconds).

W1017259

(2) Hydraulic Pump (Three point Hydraulic System)

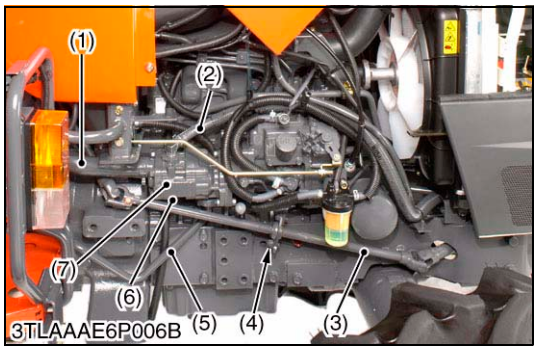

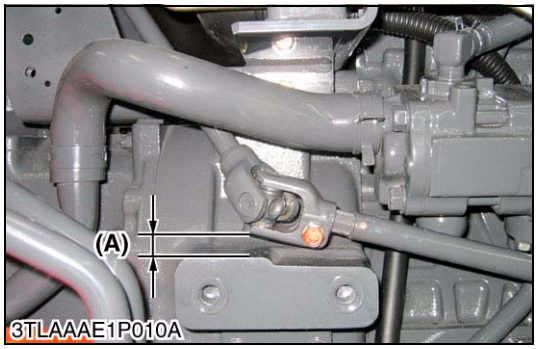

Hydraulic Pump Assembly

1. Remove the side cover.
2. Remove the steering joint shaft (3).
3. Disconnect the suction hose (1).
4. Disconnect the return hose (2).
5. Remove the delivery pipe (5), (6).
6. Remove the hydraulic pump (7).

(When reassembling)

- Lift the universal joint so that there is a clearance **(A)** of more than 5 mm (0.19 in.) between the universal joint and flywheel housing. Then fit the support (4) in position.
- Apply grease to the O-ring and take care not to damage it.

Tightening torque	Delivery pipe joint bolt	49 to 69 N·m 5.0 to 7.0 kgf·m 36.1 to 50.6 ft-lbs
	Hydraulic pump assembly mounting screw and nut	23.5 to 27.5 N·m 2.4 to 2.8 kgf·m 17.4 to 20.3 ft-lbs

(1) Suction Hose
(2) Return Hose
(3) Joint Shaft
(4) Support
(5) Delivery Pipe
(6) Delivery Pipe
(7) Hydraulic Pump

(A) Clearance

W1021098

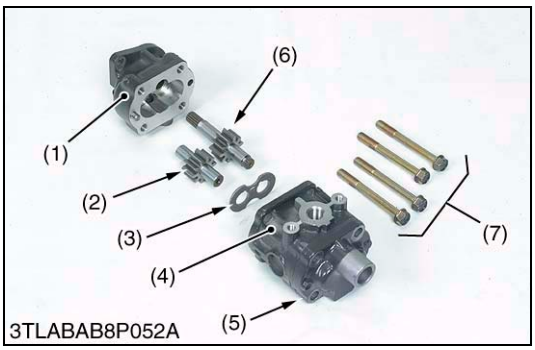

Hydraulic Pump Assembly

1. Remove the pump cover mounting screw (7).
2. Remove the drive gear (6), driven gear (2) and side plate (3) from the casing.

(When reassembling)

- Take care not to damage the gasket.
- Align the hole of the pump cover (4) and casing 2 (5).
- Install the side plate, noting its location and direction.
- Install the gears, noting its direction.

Tightening torque	Pump cover mounting screw	39.2 to 44.1 N·m 4.0 to 4.5 kgf·m 28.9 to 32.5 ft-lbs

(1) Casing 1
(2) Driven Gear
(3) Side Plate
(4) Pump Cover
(5) Casing 2
(6) Drive Gear
(7) Screw

W9632587

Hydraulic Pump Running-in

After reassembly, perform break-in operation in the following manner, and check the pump for abnormality before use. If the pump temperature should rise noticeably during running-in, recheck should be performed.

1. Install the hydraulic pump to the tractor, and mount the suction pipe and delivery pipe securely.
2. Set the engine speed at 1300 to 1500 mm^{-1} (rpm), and operate the hydraulic pump at no load for about 10 minutes.
3. Set the engine speed at 2000 to 2200 mm^{-1} (rpm), and with the hydraulic pump applied with 2.94 MPa (30 kgf/cm^2, 427 psi) to 4.90 MPa (50 kgf/cm^2, 711 psi) pressure, operate it for approx. 15 minutes.
4. With the engine set to maximum speed, fully turn the steering wheel to the left or right, then actuate the relief valve five times for 25 seconds (one time 5 seconds).

W1021758

(3) Hydraulic Cylinder

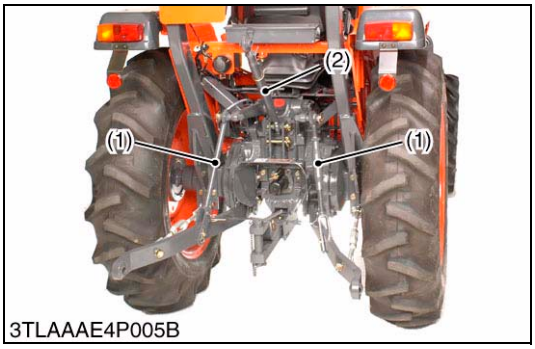

Lift-rod and Battery Negative Cable

1. Remove the lift-rods (1) and top link (2).
2. Disconnect the negative cable.

(1) Lift-rod
(2) Top Link

W1018798

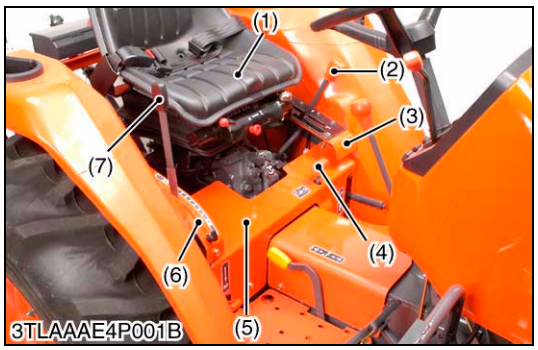

Outer Components

1. Remove the seat (1).
2. Remove the grips (2), (4), (7) and (8).
3. Remove the range gear shift lever guide (3) and hydraulic lever guide (6).
4. Remove the center cover (5).

(1) Seat
(2) Grip
(3) Range Gear Shift Lever Guide
(4) Grip
(5) Center Cover
(6) Hydraulic Lever Guide
(7) Grip (Position Control Lever)
(8) Grip (Draft Control Lever)

W1019004

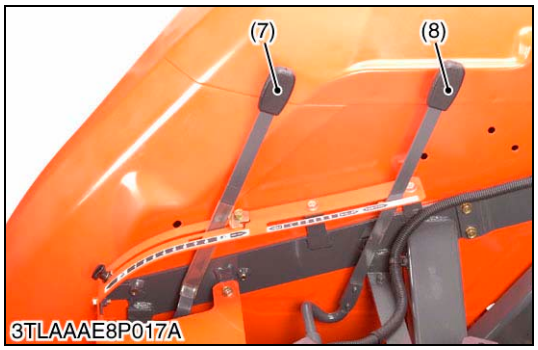

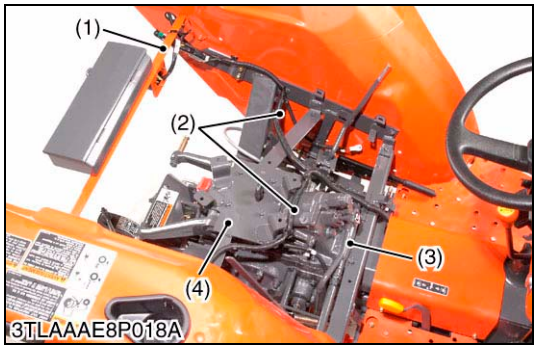

Wiring

1. Disconnect the wiring (2).
2. Remove the fender rear stay (1).
3. Remove the seat support (4).
4. Remove the delivery pipe joint bolt (3).

(When reassembling)

- Install the copper washers firmly.

Tightening torque	Delivery pipe joint bolt	39.0 to 49.0 N·m 4.5 to 5.0 kgf·m 32.5 to 36.2 ft-lbs

(1) Fender Rear Stay
(2) Wirings
(3) Delivery Pipe Joint Bolt
(4) Seat Support

W1019231

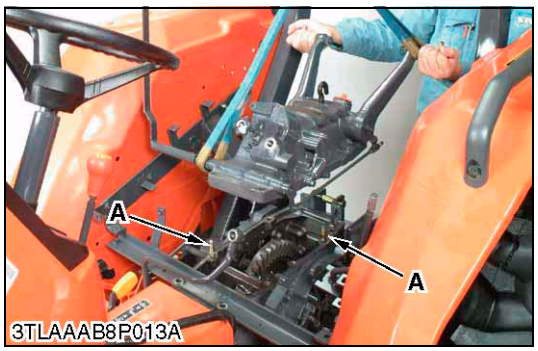

Hydraulic Cylinder

1. Loosen and remove the hydraulic cylinder assembly mounting screws and nuts.
2. Support the hydraulic cylinder assembly with a nylon lift strap and hoist, and then lift it clear.

(When reassembling)

- Apply liquid gasket (Three Bond 1208D or equivalent) to joint face of the hydraulic cylinder assembly and transmission case after eliminating the water, oil and the old remaining liquid gasket.
- When replacing the hydraulic cylinder assembly mounting stud bolts, apply liquid lock (Three Bond 1372 or equivalent) to **"A"** portion of the stud bolt.

Tightening torque	Hydraulic cylinder assembly mounting stud bolts	34.3 to 49.0 N·m 3.5 to 5.0 kgf·m 25.3 to 36.2 ft-lbs
	Hydraulic cylinder assembly mounting screws and nuts	77.4 to 90.2 N·m 7.9 to 9.2 kgf·m 57.1 to 66.5 ft-lbs

■ **NOTE**

- **Reassemble the hydraulic cylinder assembly to the tractor, be sure to adjust the position (draft) control feedback rod. (See page 8-S11, S12.)**

W1019558

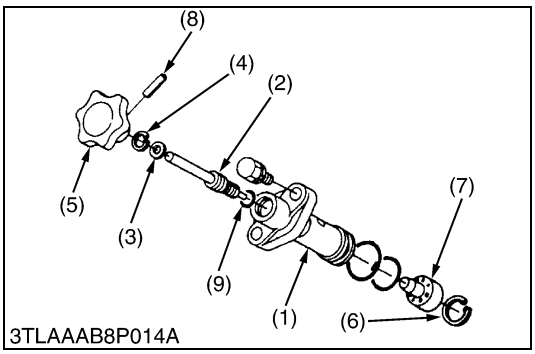

Lowering Speed Adjusting Valve

1. Remove the lowering speed adjusting valve from hydraulic cylinder block.
2. Tap out the spring pin (8), and remove the grip (5).
3. Remove the internal snap ring (4), and remove the hydraulic adjusting shaft (2).
4. Remove the internal snap ring (6) and draw out the adjusting collar (7).

(When reassembling)

- Install the hydraulic adjusting shaft (2) and valve body (1), noting O-ring (9).

(1) Valve Body
(2) Hydraulic Adjusting Shaft
(3) Washer
(4) Internal Snap Ring
(5) Grip
(6) Internal Snap Ring
(7) Adjusting Collar
(8) Spring Pin
(9) O-ring

W1019917

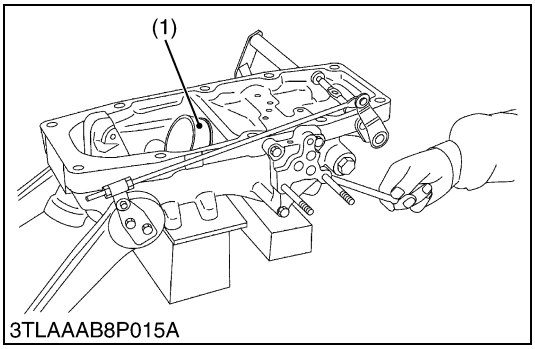

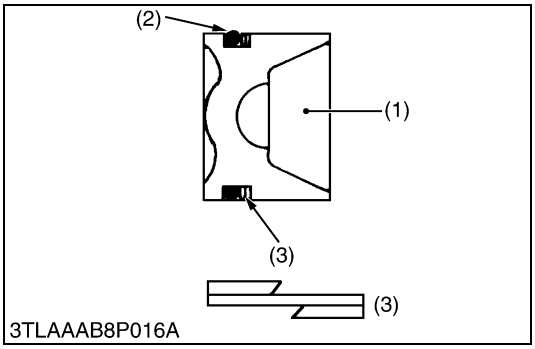

Hydraulic Rod and Hydraulic Piston

1. Tap out the spring pin.
2. Remove the hydraulic rod.
3. Push out the hydraulic piston (1).

(When reassembling)

- Install the piston, noting O-ring and back-up ring (3). (See figure.)
- Apply grease to the piston bottom that contacts with the hydraulic rod.
- Apply transmission fluid to the cylinder, and then install the hydraulic piston (1).

(1) Hydraulic Piston
(2) O-ring
(3) Back-up Ring

W1020199

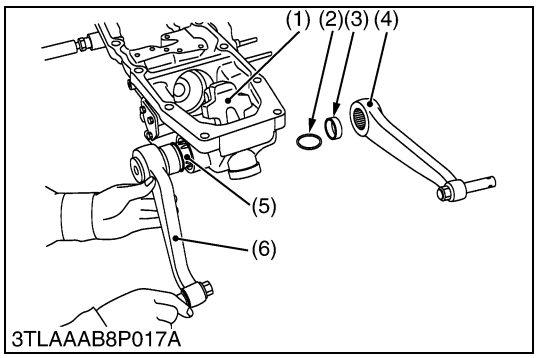

3TLAAAB8P017A

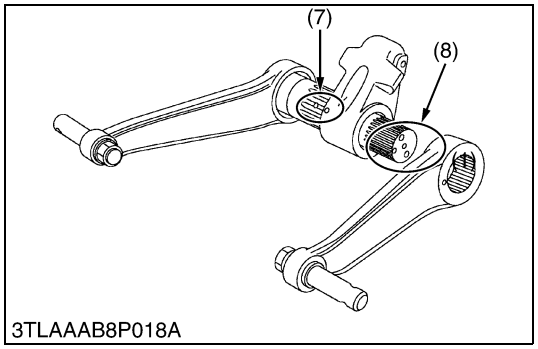

3TLAAAB8P018A

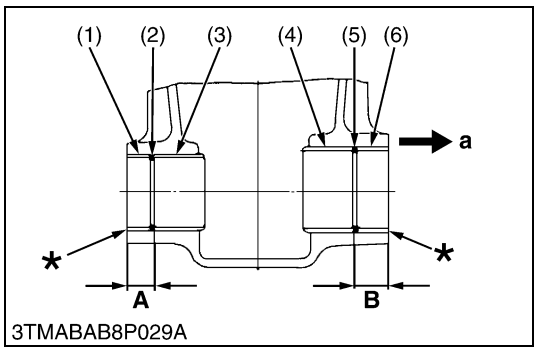

3TMABAB8P029A

Lift Arm, Hydraulic Arm and Hydraulic Arm Shaft

1. Disconnect the position control rod from feedback lever.
2. Remove the lift arm setting screws.
3. Draw out the hydraulic arm shaft (5) and right lift arm (6) as a unit.
4. Take out the hydraulic arm (1).
5. Remove the collar (3) and O-ring (2).

(When reassembling)

- Align the alignment marks of the hydraulic arm and hydraulic arm shaft (7).
- Align the alignment marks of the lift arm and hydraulic arm shaft (8).
- Apply grease to the right and left bushings of hydraulic cylinder block and O-rings (2)
- Take care not to damage the O-ring (2).

(1) Hydraulic Arm
(2) O-ring
(3) Collar
(4) Lift Arm (Left)
(5) Hydraulic Arm Shaft
(6) Lift Arm (Right)
(7) Alignment Mark (Hydraulic Arm Shaft and Hydraulic Arm)
(8) Alignment Mark (Hydraulic Arm Shaft and Lift Arm)

W1020729

Bushings

1. Remove the bushings right (4) and left side (3).

(When reassembling)

- When press-fitting new bushings (3), (4) with a press-fitting tool (see page G-41) observe the dimensions described in the figure.
- Apply transmission fluid to the hydraulic cylinder liner boss and bushing.
- Press- fit the bushing so that each seam facing upward.

Press-fitting location of bushings	Factory spec.	Dimension **A**	21.75 to 22.75 mm 0.856 to 0.895 in.
		Dimension **B**	26.50 to 27.50 mm 1.043 to 1.082 in.

(1) Collar (Left)
(2) O-ring
(3) Bushing (Left)
(4) Bushing (Right)
(5) O-ring
(6) Collar (Right)

a : Right Side
***Flush the end of collar with the end of hydraulic cylinder body.**

W1024284

(4) Position Control Valve

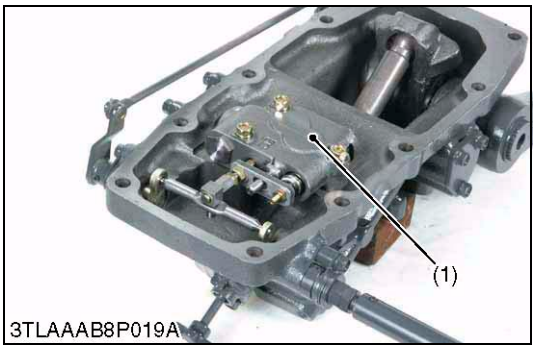

Position Control Valve

1. Loosen and remove the position control valve mounting screws.
2. Remove the position control valve (1).

(When reassembling)

- Take care not to damage the O-rings.

Tightening torque	Position control valve mounting screws	23.6 to 27.4 N·m 2.4 to 2.8 kgf·m 17.4 to 20.2 ft-lbs

■ **IMPORTANT**

- **Measure the distance between the spool edge and spool joint 2 edge before disassembling.**

(1) Position Control Valve

W1024698

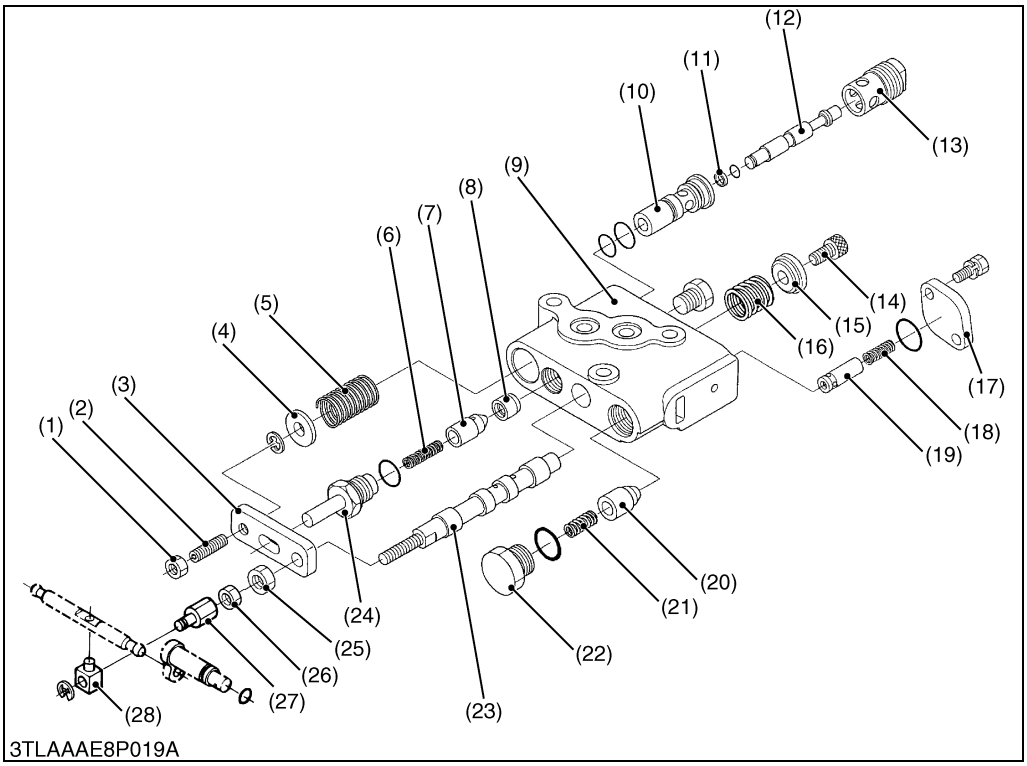

(1) Nut 1
(2) Set Screw
(3) Plate 1
(4) Washer
(5) Spring
(6) Spring
(7) Poppet 1
(8) Valve Seat
(9) Valve Body
(10) Sleeve
(11) Backup Ring
(12) Poppet 2
(13) Plug 1
(14) Screw
(15) Spring Holder
(16) Spring
(17) Plate 2
(18) Spring
(19) Poppet 3
(20) Unload Poppet
(21) Spring
(22) Unload Plug
(23) Spool
(24) Plug 2
(25) Nut
(26) Lock Nut
(27) Spool Joint 1
(28) Spool Joint 2

W1016748

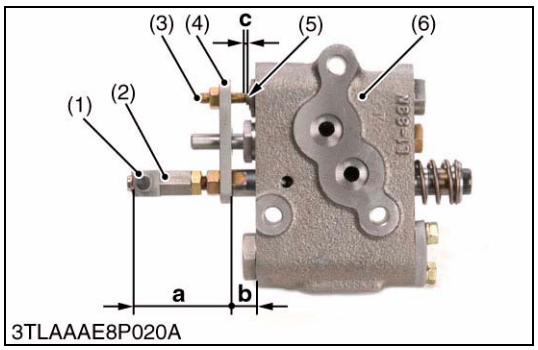

■ **IMPORTANT**

- **Set screw (3) and spool joint 1 (2) are adjusted to very close accuracy. Do not disassemble them unless necessary.**
  If disassembled due to unavoidable reasons, be sure to make the following adjustments before assembling.

■ **Spool joint 1 (2)**

1. Turn and adjust the spool joint 1 (2) so that the dimension (**a**) between the spool joint 2 (1) and the plate 1 (4) is 47.0 to 48.0 mm (1.85 to 1.89 in.).
2. After the adjustment, be sure to adjust the position control feedback rod.

■ **Set screw (3)**

1. Set the dimension (**b**) between the plate 1 (4) and the valve body to 16.0 mm (0.63 in.)
2. Turn and adjust the set screw (3) so that the clearance (**c**) between the set screw (3) and the poppet 2 (5) becomes 0.1 to 0.2 mm (0.0039 to 0.0079 in.).

(When reassembling)

Tightening torque	Plug 1	39.2 to 58.8 N·m 4.0 to 6.0 kgf·m 28.9 to 43.4 ft-lbs
	Plug 2	29.4 to 49.0 N·m 3.0 to 5.0 kgf·m 21.7 to 36.2 ft-lbs
	Unload plug	39.2 to 58.8 N·m 4.0 to 6.0 kgf·m 28.9 to 43.4 ft-lbs

(1) Spool Joint 2
(2) Spool Joint 1
(3) Set Screw
(4) Plate 1
(5) Poppet 2
(6) Valve Body

a : Dimension
b : Dimension
c : Clearance

W1017128

(5) Draft Control Valve

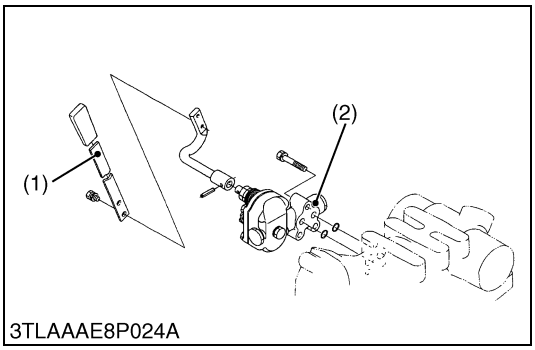

Removing Draft Control Valve

1. Removing the draft control lever (1).
2. Disconnect the draft control rod from the draft control valve (2).
3. Remove the draft control valve (2).

(When reassembling)

- Take care not to damage the O-ring.

(1) Draft Control Lever
(2) Draft Control Valve

W1023313

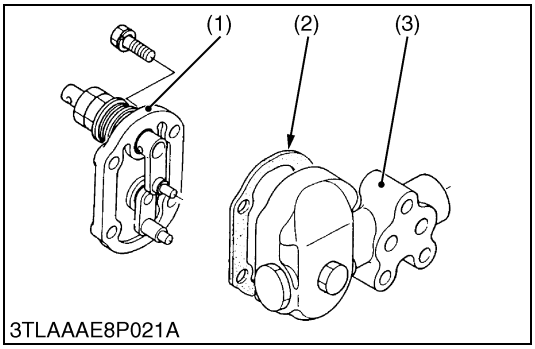

Valve Cover

1. Removing four screws, and separate the valve cover (1) from the valve body (3).

(1) Valve Cover
(2) Gasket
(3) Valve Body

W1023686

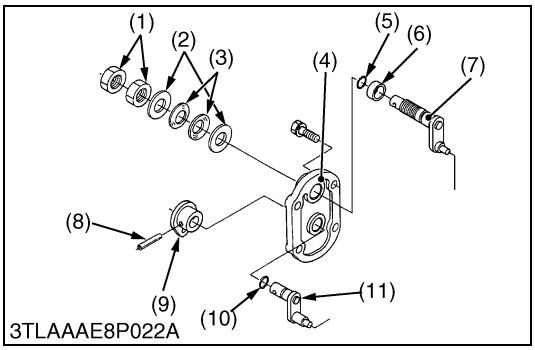

Control Lever Shaft and Feedback Lever Shaft

1. Remove the nut (1) and draw out the draft control lever shaft (7).
2. Tap out the spring pin (8).
3. Remove the feedback lever (9), and draw out the feedback lever shaft (11).

(When reassembling)

- Take care not to damage the O-rings (5), (11).

(1) Nut
(2) Plain Washer
(3) Belleville Spring
(4) Valve Cover
(5) O-ring
(6) Collar
(7) Draft Control Lever Shaft
(8) Spring Pin
(9) Feedback Lever
(10) O-ring
(11) Feedback Lever Shaft

W1024199

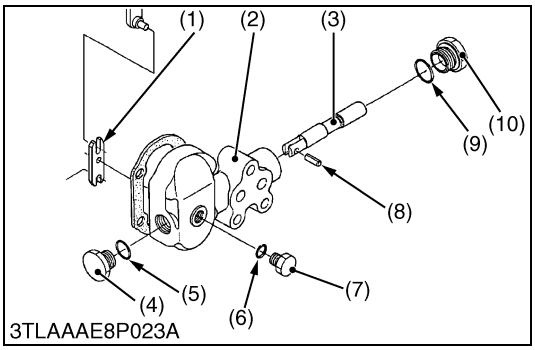

Spool and Spool Drive Lever

1. Removing the plug (4), (7) and (10).
2. Remove the spring pin (8), and remove the spool drive lever (1).
3. Draw out the spool (3).

(When reassembling)

- Take care not to damage the O-rings.

(1) Spool Drive Lever
(2) Valve Body
(3) Spool
(4) Plug
(5) O-ring
(6) O-ring
(7) Plug
(8) Spring Pin
(9) O-ring
(10) Plug

W1024419

(6) Relief Valve

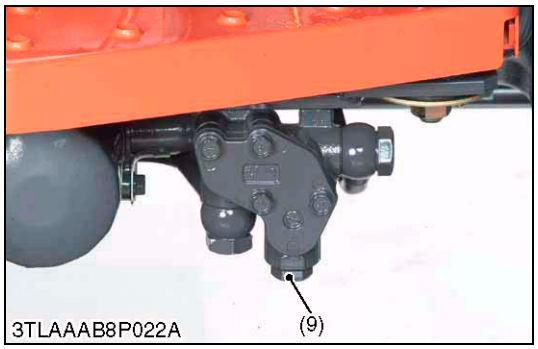

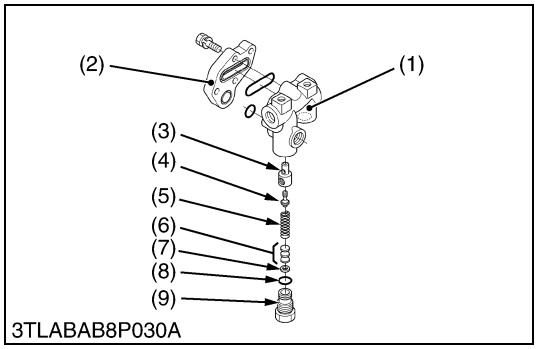

Relief Valve

1. Remove the plug (9), and draw out the spring (5) and the poppet (4).
2. Remove the valve seat (3).

(When reassembling)

- Take care not to damage the O-ring.

Tightening torque	Relief valve plug	49.0 to 69.0 N·m 5.0 to 7.0kgf·m 36.1 to 50.6 ft-lbs

■ **IMPORTANT**

- **After disassembling and assembling the relief valve, be sure to adjust the relief valve setting pressure.**

(1) Front Hydraulic Block
(2) Cap
(3) Valve Seat
(4) Poppet
(5) Spring
(6) Adjusting Shim
(7) Washer
(8) O-ring
(9) Plug

W1022485

https://truckmanualshub.com/

[3] SERVICING

(1) Hydraulic Pump (Power Steering)

Housing Bore (Depth of Scratch)

1. Check for the scratches on the interior surface of the housing caused by the gear.
2. If the scratches reach more than half the area of the interior surface of the housing, replace the pump assembly.
3. Measure the housing I.D. where the interior surface is not scratched, and measure the housing I.D. where the interior surface is scratched.
4. If the values obtained in the two determinations differ by more than the allowable limit, replace the hydraulic pump as a unit.

Depth of scratch	Allowable limit	0.09 mm 0.0035 in.

(Reference)

- Use a cylinder gauge to measure the housing I.D..

W1014649

Clearance between Bushing and Gear Shaft

1. Measure the gear shaft O.D. with and outside micrometer.
2. Measure the bushing I.D. with an inside micrometer or cylinder gauge, and calculate the clearance.
3. If the clearance exceeds the allowable limit, replace the gear shaft and the bushings as a unit.

Clearance between bushing and gear shaft	Factory spec.	0.020 to 0.081 mm 0.0008 to 0.0032 in.
	Allowable limit	0.15 mm 0.0059 in.

Gear shaft O.D.	Factory spec.	14.970 to 14.980 mm 0.5894 to 0.5898 in.
Bushing I.D.	Factory spec.	15.000 to 15.051 mm 0.5906 to 0.5926 in.

W1029112

Side Plate Thickness

1. Measure the side plate thickness with an outside micrometer.
2. If the thickness is less than the allowable limit, replace it.

Side plate thickness	Factory spec.	2.48 to 2.50 mm 0.0976 to 0.0984 in.
	Allowable limit	2.40 mm 0.0945 in.

W1023443

(2) Hydraulic Pump (Three Point System)

Housing Bore (Depth of Scratch)

1. Check for the scratches on the interior surface of the housing caused by the gear.
2. If the scratches reach more than half the area of the interior surface of the housing, replace the pump assembly.
3. Measure the housing I.D. where the interior surface is not scratched, and measure the housing I.D. where the interior surface is scratched.
4. If the values obtained in the two determinations differ by more than the allowable limit, replace the hydraulic pump as a unit.

Depth of scratch	Allowable limit	0.09 mm 0.0035 in.

(Reference)

- Use a cylinder gauge to measure the housing I.D..

W1234567

Clearance between Bushing and Gear Shaft

1. Measure the gear shaft O.D. with and outside micrometer.
2. Measure the bushing I.D. with an inside micrometer or cylinder gauge, and calculate the clearance.
3. If the clearance exceeds the allowable limit, replace the gear shaft and the bushings as a unit.

Clearance between bushing and gear shaft	Factory spec.	0.020 to 0.081 mm 0.0008 to 0.0032 in.
	Allowable limit	0.15 mm 0.0059 in.

Gear shaft O.D.	Factory spec.	14.970 to 14.980 mm 0.5894 to 0.5898 in.
Bushing I.D.	Factory spec.	15.000 to 15.051 mm 0.5906 to 0.5926 in.

W7412589

Side Plate Thickness

1. Measure the side plate thickness with an outside micrometer.
2. If the thickness is less than the allowable limit, replace it.

Side plate thickness	Factory spec.	2.48 to 2.50 mm 0.0976 to 0.0984 in.
	Allowable limit	2.40 mm 0.0945 in.

W1023824

(3) Hydraulic Cylinder

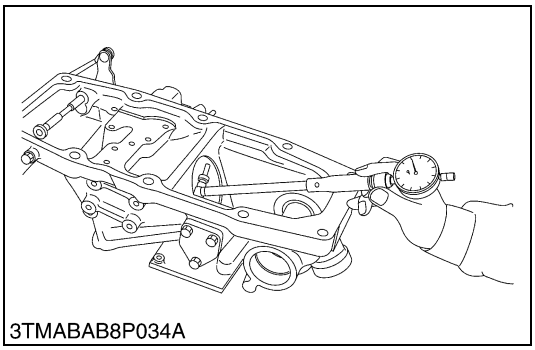
3TMABAB8P034A

Hydraulic Cylinder Bore

1. Check the cylinder internal surface for scoring or damage.
2. Measure the cylinder I.D. with a cylinder gauge.
3. If the measurement exceeds the allowable limit, replace.

Cylinder I.D.	Factory spec.	75.000 to 75.050 mm 2.9528 to 2.9547 in.
	Allowable limit	75.150 mm 2.9587 in.

W1026023

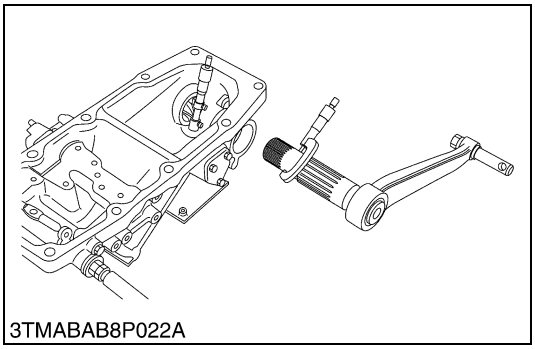
3TMABAB8P022A

Clearance between Hydraulic Arm Shaft and Bushing

1. Measure the hydraulic arm shaft O.D. with an outside micrometer.
2. Measure the bushing I.D. with a cylinder gauge or inside micrometer.
3. If the clearance exceeds the allowable limit. replace.

Clearance between hydraulic arm shaft and bushing	Factory spec.	Right	0.125 to 0.230 mm 0.0049 to 0.0091 in.
		Left	0.125 to 0.220 mm 0.0049 to 0.0087 in.
	Allowable limit	Right	0.50 mm 0.02 in.
		Left	0.50 mm 0.02 in.

Hydraulic arm shaft O.D.	Factory spec.	Right	44.920 to 44.950 mm 1.7685 to 1.7697 in.
		Left	39.920 to 39.950 mm 1.5717 to 1.5728 in.

Bushing I.D. (after press fitted)	Factory spec.	Right	45.075 to 45.150 mm 1.7746 to 1.7776 in.
		Left	40.075 to 40.140 mm 1.5778 to 1.5803 in.

W1026122

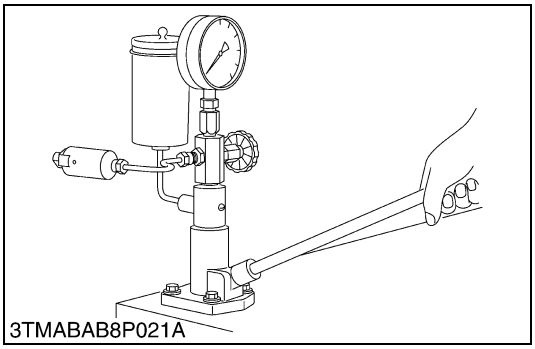
3TMABAB8P021A

Operating Pressure of Cylinder Safety Valve

1. Attach the cylinder safety valve to injection nozzle tester with a safety valve setting adaptor.
2. Measurement the operating pressure of the cylinder safety valve.
3. If the operating pressure is not within the factory specifications, adjust by turning the adjusting screw (1).
4. After adjustment, tighten the lock nut (2) firmly.

■ **NOTE**

- **Use specified transmission fluid (See page G-6) to test the operating pressure of the cylinder safety valve.**

Cylinder safety valve operating pressure	Factory spec.	19.6 to 22.6 MPa 200 to 230 kgf/cm^2 2845 to 3277 psi

Tightening torque	Lock nut	58.8 to 78.5 N·m 6.0 to 8.0 kgf·m 43.4 to 57.9 ft-lbs

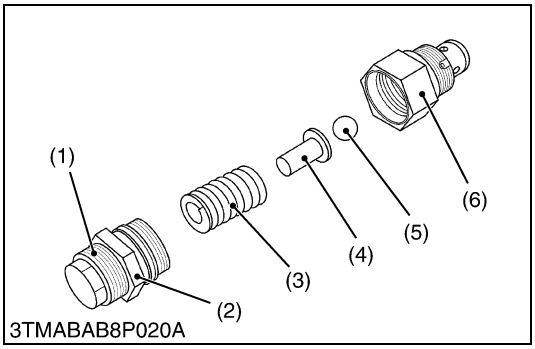

3TMABAB8P020A

(1) Adjusting Screw
(2) Lock Nut
(3) Spring
(4) Seat
(5) Ball
(6) Housing

W1029814

https://truckmanualshub.com/

9 ELECTRICAL SYSTEM

https://truckmanualshub.com/

MECHANISM

CONTENTS

1. WIRING DIAGRAM 9-M1

1. WIRING DIAGRAM

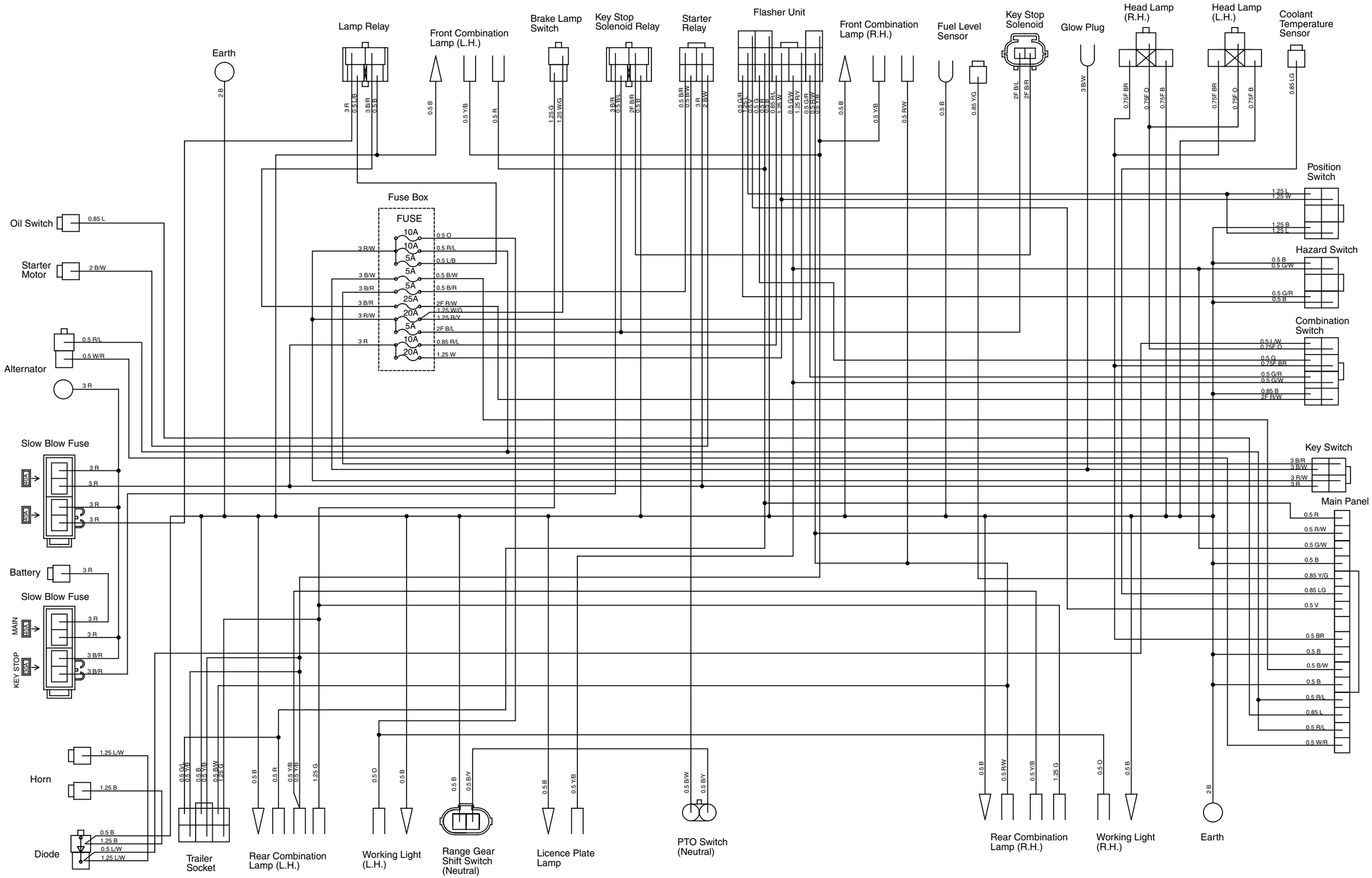

https://truckmanualshub.com/

SERVICING

CONTENTS

1. TROUBLESHOOTING 9-S1
2. SERVICING SPECIFICATIONS 9-S5
3. TIGHTENING TORQUES 9-S6
4. CHECKING, DISASSEMBLING AND SERVICING 9-S7
   [1] CHECKING AND ADJUSTING 9-S7
      (1) Battery 9-S7
      (2) Main Switch 9-S8
      (3) Safety Switch 9-S10
      (4) Starter and Starter Relay 9-S10
      (5) Glow Control System 9-S11
      (6) Engine Stop Solenoid 9-S12
      (7) Charging System 9-S13
      (8) Combination Switch 9-S14
      (9) Hazard Switch 9-S18
      (10) Parking (Position) Switch 9-S19
      (11) Flasher (Hazard) Unit 9-S20
      (12) Fuel Level Sensor 9-S20
      (13) Coolant Temperature Sensor 9-S20
      (14) Brake Light Switch 9-S21
      (15) Trailer Socket 9-S21
   [2] DISASSEMBLING AND ASSEMBLING 9-S23
      (1) Starter 9-S23
      (2) Alternator 9-S23
   [3] SERVICING 9-S26
      (1) Starter 9-S26
      (2) Alternator 9-S28

https://truckmanualshub.com/

1. TROUBLESHOOTING

FUSE AND WIRING

Symptom	Probable Cause	Solution	Reference Page
All Electrical Equipment Do Not Operate	Battery discharged or defective	Recharge or replace	9-S7
	Battery positive cable disconnected or improperly connected	Repair or replace	9-S7
	Battery negative cable disconnected or improperly connected	Repair or replace	9-S7
	Slow blow fuse blown	Replace	G-30
Fuse Blown Frequently	Short-circuited	Repair or replace	–

W10143220

BATTERY

Battery Discharges Too Quickly	Battery defective	Replace	9-S7
	Alternator defective	Repair or replace	9-S23 to S25, S28, S29
	Wiring harness disconnected or improperly connected (between battery positive terminal and regulator **B** terminal)	Repair or replace	–
	Cooling fan belt slipping	Adjust tension	–

W10137180

STARTING SYSTEM

Starter Motor Does Not Operate	Battery discharged or defective	Recharge or replace	9-S7
	Slow blow fuse blown	Replace	G-30
	Safety switch defective	Replace	9-S10
	Safety switch improperly adjusted	Repair	9-S10
	Wiring harness disconnected or improperly connected (between main switch **ST** terminal and safety switch, between battery positive terminal and starter motor **B** terminal)	Repair or replace	–
	Starter motor defective	Repair or replace	9-S23, S26, S27
	Main switch defective	Replace	9-S8, S9

W10137180

CHARGING SYSTEM

Charging Lamp Does Not Light when Main Switch is Turned ON	Fuse blown (10 A)	Replace	G-30
	Wiring harness disconnected or improperly connected (between main switch **AC** terminal and panel board, between panel board and alternator **L** terminal)	Repair or replace	–
Charging Lamp Does Not Go Off When Engine is Running	Short circuit between alternator **L** terminal lead and chassis	Repair or replace	–
	Alternator defective	Repair or replace	9-S23 to S25, S28, S29

W10135800

LIGHTING SYSTEM

Symptom	Probable Cause	Solution	Reference Page
Head Light Does Not Light	Fuse blown (25 A)	Replace	G-30
	Bulb blown	Replace	G-30
	Wiring harness disconnected or improperly connected (between main switch **AC** terminal and combination switch **B1** terminal, between combination switch **1** terminal and head light, between combination switch **2** terminal and head light)	Repair or replace	–
Illumination Light Does Not Light	Fuse blown (10 A)	Replace	G-30
	Bulb blown	Replace	G-30
	Wiring harness disconnected or improperly connected (between combination switch **T** terminal and panel board)	Repair or replace	–
Tail Light Does Not Light	Fuse blown (15 A)	Replace	G-30
	Wiring harness disconnected or improperly connected (between combination switch **T** terminal and tail lights)	Repair or replace	–
Hazard and Turn Signal Light Does Not Light	Fuse blown (10 A)	Replace	G-30
	Bulb blown	Replace	G-30
	Wiring harness disconnected or improperly connected	Repair or replace	–
	Hazard unit defective	Replace	9-S20
	Hazard switch defective	Replace	9-S18, S19
	Combination switch (turn signal switch defective)	Replace	–
Hazard and Turn Signal Indicator Lamp Does Not Light	Bulb blown	Replace	G-30
	Wiring harness disconnected or improperly connected	Repair or replace	–
Hazard and Turn Signal Light Does Not Go ON and OFF	Hazard unit defective	Replace	9-S20
Work Light Does Not Light	Fuse blow (10A)	Replace	G-30
	Bulb blown	Replace	G-30
	Wiring harness disconnect or improperly connected (between starter motor **B** terminal and work light)	Repair or replace	–

W10137180

LIGHTING SYSTEM (Continued)

Symptom	Probable Cause	Solution	Reference Page
Licence Plate Light Does Not Light	Fuse blown (15A)	Replace	G-30
	Bulb blown	Replace	G-30
	Wiring harness disconnected or improperly connected (between main switch **AC** terminal and combination switch **B1** terminal, between combination switch **T** terminal and light)	Repair or Replace	–
Parking (Position) Light Does Not Light	Fuse blown (10A)	Replace	G-30
	Bulb blown	Replace	G-30
	Parking (position) light switch defective	Repair or Replace	9-S19
	Wiring harness disconnected (between parking (position) light switch and parking (position) light)	Repair or Replace	–

W10135800

HORN

Horn Does Not Sound When Horn Button is Pushes	Combination switch defective	Replace	9-S18
	Horn defective	Replace	–
	Wiring harness disconnected or improperly connected (between combination switch terminal and horn)	Repair or Replace	–

W10137180

EASY CHECKER

Engine Oil Pressure Lamp Lights Up When Engine is Running	Engine oil pressure too low	Repair engine	1-S13
	Engine oil insufficient	Replenish	G-11
	Engine oil pressure switch defective	Replace	–
	Short circuit between engine oil pressure switch lead and chassis	Repair	–
	Circuit in hour meter defective	Replace	–
Engine Oil Pressure Lamp Does Not Light When Main Switch is Turned ON and Engine is Not Running	Bulb blown	Replace	–
	Engine oil pressure switch defective	Replace	–
	Wiring harness disconnected or improperly connected (between hour meter and engine oil pressure switch)	Repair or replace	–
	Circuit in hour meter defective	Replace	–

W10215320

https://truckmanualshub.com/

GAUGES

Fuel Gauge Does Not Function	Fuel level sensor (tank unit) defective	Replace	9-S20
	Wiring harness disconnected or improperly connected (between panel board and fuel level sensor)	Repair or Replace	–
	Circuit in panel board defective	Replace	–
Coolant Temperature Gauge Does Not Function	Coolant temperature gauge defective	Replace	–
	Coolant temperature sensor defective	Replace	9-S20
	Wiring harness disconnected or improperly connected (between panel board and coolant temperature sensor)	Repair or Replace	–
	Circuit in panel board defective	Replace	–

W10214010

2. SERVICING SPECIFICATIONS

STARTER MOTOR

Item		Factory Specification	Allowable Limit
Commutator	O.D.	29.0 mm 1.14 in.	28.0 mm 1.10 in.
Mica	Undercut	0.50 to 0.80 mm 0.020 to 0.031 in.	0.20 mm 0.008 in.
Brush	Length	16 mm 0.63 in.	12.0 mm 0.47 in.

W10138740

ALTERNATOR

Brush	Length	10.5 mm 0.413 in.	8.4 mm 0.331 in.
Slip Ring	O.D.	14.4 mm 0.567 in.	14.0 mm 0.551 in.

W10241380

GLOW PLUG

Glow Plug	Resistance	Approx. 0.9 Ω	–

W10242410

3. TIGHTENING TORQUES

Tightening torques of screws, bolts and nuts on the table below are especially specified.
(For general use screws, bolts and nuts : See page G-7.)

Item	N·m	kgf·m	ft-lbs
Alternator pulley nut	58.3 to 78.9	5.95 to 8.05	43.0 to 58.2
Starter terminal nut	5.9 to 11.8	0.6 to 1.2	4.3 to 8.7

W10127360

4. CHECKING, DISASSEMBLING AND SERVICING

CAUTION

- **To avoid accidental short circuit, be sure to attach the positive cable to the positive terminal before the negative cable is attached to the negative terminal.**
- **Never remove the battery cap while the engine is running.**
- **Keep electrolyte away from eyes, hands and clothes. If you are splashed with it, wash it away completely with water immediately.**
- **Keep open sparks and flames away from the battery at all times. Hydrogen gas mixed with oxygen becomes very explosive.**

■ **IMPORTANT**

- **If the machine is to be operated for a short time without battery (using a slave battery for starting), use additional current (lights) while engine is running and insulate terminal of battery. If this advice is disregarded, damage to alternator and regulator may result.**

[1] CHECKING AND ADJUSTING

(1) Battery

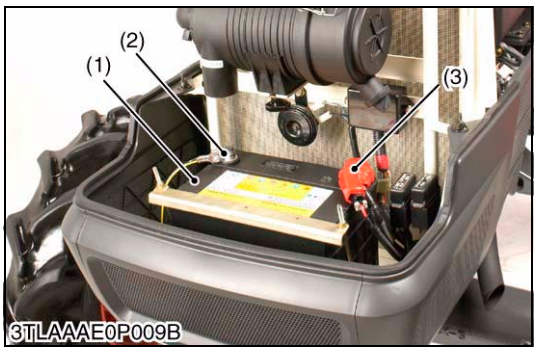

Battery Voltage

1. Stop the engine and turn the main switch off.
2. Connect the COM (–) lead of the voltmeter to the battery's negative terminal post and the (+) lead to the positive terminal post, and measure the battery voltage.
3. If the battery voltage is less than the factory specification, check the battery specific gravity and recharge the battery.

Battery voltage	Reference value	More than 12 V

(1) Battery
(2) Battery Negative Terminal
(3) Battery Positive Terminal

W10125620

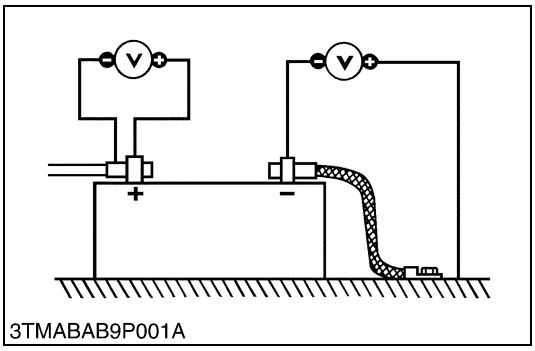

Battery Terminal Connection

1. Turn the main switch on, and turn on the head light.
2. Measure the voltage with a voltmeter across the battery's positive terminal post and the cable terminal, and the voltage across the battery's negative terminal post and the chassis.
3. If the measurement exceeds the factory specification, clean the battery terminal posts and cable clamps, and tighten them firmly.

Potential difference	Reference value	Less than 0.1 V

W10126630

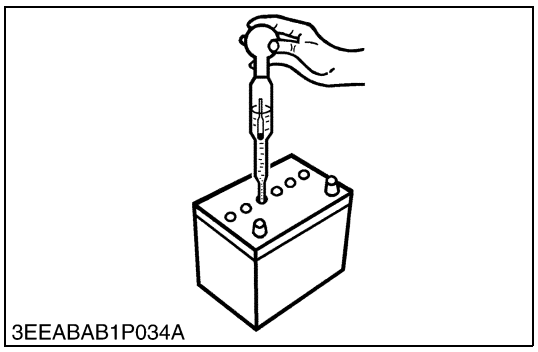
3EEABAB1P034A

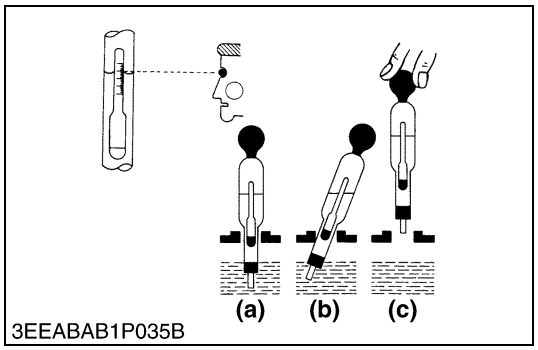

3EEABAB1P035B

Battery Specific Gravity

1. Check the specific gravity of the electrolyte in each cell with a hydrometer.
2. When the electrolyte temperature differs from that at which the hydrometer was calibrated, correct the specific gravity reading following the formula mentioned in **(Reference)**.
3. If the specific gravity is less than 1.215 (after it is corrected for temperature), charge or replace the battery.
4. If the specific gravity differs between any two cells by more than 0.05, replace the battery.

■ **NOTE**

- **Hold the hydrometer tube vertical without removing it from the electrolyte.**
- **Do not suck too much electrolyte into the tube.**
- **Allow the float to move freely and hold the hydrometer at eye level.**
- **The hydrometer reading must be taken at the highest electrolyte level.**

(Reference)

- Specific gravity slightly varies with temperature. To be exact, the specific gravity decreases by 0.0007 with an increase of 1 °C (0.0004 with an increase of 1 °F) in temperature, and increases by 0.0007 with a decreases of 1 °C (0.0004 with a decrease of 1 °F).
  Therefore, using 20 °C (68 °F) as a reference, the specific gravity reading must be corrected by the following formula :
  - Specific gravity at 20 °C = Measured value + 0.0007 × (electrolyte temperature – 20 °C)
  - Specific gravity at 68 °F = Measured value + 0.0004 × (electrolyte temperature – 68 °F)

Specific Gravity	State of Charge
1.260 Sp. Gr.	100 % Charged
1.230 Sp. Gr.	75 % Charged
1.200 Sp. Gr.	50 % Charged
1.170 Sp. Gr.	25 % Charged
1.140 Sp. Gr.	Very Little Useful Capacity
1.110 Sp. Gr.	Discharged

At an electrolyte temperature of 20 °C (68 °F)

(a) Good
(b) Bad
(c) Bad

W10127630

(2) Main Switch

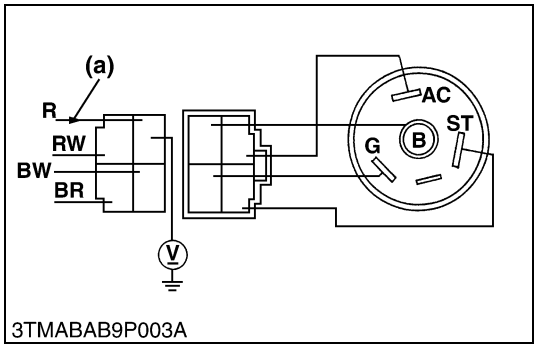

3TMABAB9P003A

Connector Voltage

1. Measure the voltage with a voltmeter across the connector B terminal and chassis.
2. If the voltage differs from the battery voltage (11 to 14 V), the wiring harness is faulty.

Voltage	Connector **B** terminal – Chassis	Approx. battery voltage

(a) From Battery Positive Terminal

W10258020

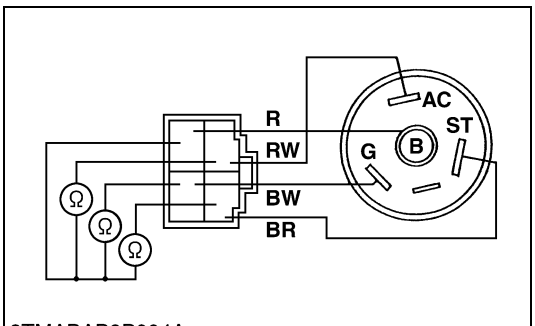

3TMABAB9P004A

Main Switch Key at OFF Position

1. Turn the main switch off.
2. Measure the resistance with an ohmmeter across the **B** terminal and the **AC** terminal, **B** terminal and **ST** terminal, and **B** terminal and **G** terminal.
3. If infinity is not indicated, the contacts of the main switch are faulty.

Resistance	**B** terminal – **AC** terminal	Infinity
	B terminal – **ST** terminal	Infinity
	B terminal – **G** terminal	Infinity

W10269090

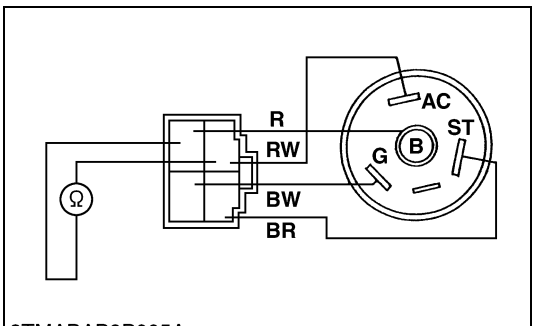

3TMABAB9P005A

Main Switch Key at ON Position

1. Turn the main switch on.
2. Measure the resistance with an ohmmeter across the **B** terminal and the **AC** terminal.
3. If 0 ohm is not indicated, the **B** - **AC** contacts of the main switch are faulty.

Resistance	**B** terminal – **AC** terminal	0 Ω

W10311390

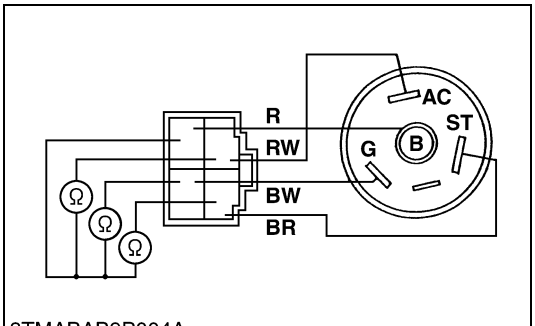

3TMABAB9P004A

Main Switch at START Position

1. Turn and hold the main switch key at the **"START"** position.
2. Measure the resistances with an ohmmeter across the **B** terminal and the **G** terminal, and across the **B** terminal and the **AC** terminal, and across the **B** terminal and the **ST** terminal.
3. If 0 ohm is not indicated, these contacts of the main switch are faulty.

Resistance	**B** terminal – **G** terminal	0 Ω
	B terminal – **ST** terminal	0 Ω
	B terminal – **AC** terminal	0 Ω

W10313610

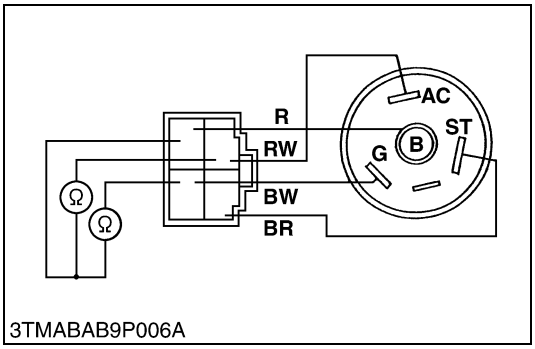

3TMABAB9P006A

Main Switch at key PREHEAT Position

1. Turn and hold the main switch key at the **"PREHEAT"** position.
2. Measure the resistances with an ohmmeter across the **B** terminal and the **G** terminal, and across **B** terminal and **AC** terminal.
3. If 0 ohm is not indicated, these contacts of the main switch are faulty.

Resistance	**B** terminal – **G** terminal	0 Ω
	B terminal – **AC** terminal	0 Ω

W10315710

(3) Safety Switch

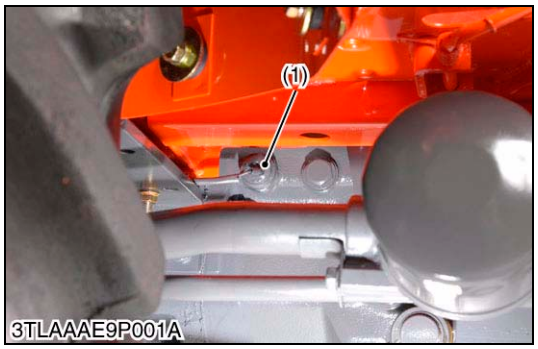

Safety Switch Continuity

1. Remove the safety switch leads.
2. Connect the circuit tester to the safety switch leads.
3. Measure the resistance between leads.
4. If the safety switch is defective, replace it.

Resistance (Across switch terminal)	When switch push is pushed	0 Ω
	When switch push is released	Infinity

(1) Safety Switch for PTO Gear Shift Lever
(2) Safety Switch for Range Gear Shift Lever

W10385250

(4) Starter and Starter Relay

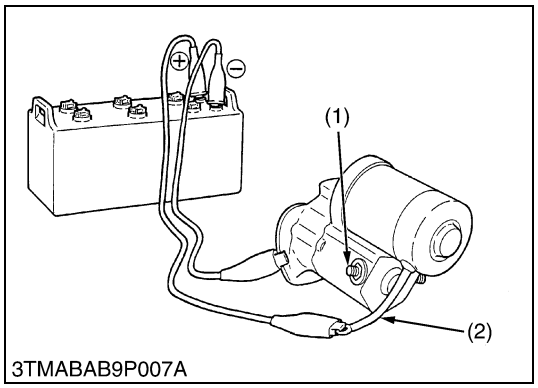

Starter Motor B Terminal Voltage

1. Measure the voltage across the **B** terminal and chassis.
2. If the voltage differs from the battery voltage, check the battery's cable.

Voltage	Factory spec.	Approx. battery voltage

W10396300

Motor Test

CAUTION

- **Secure the starter to prevent it from jumping up and down while testing the motor.**

1. Disconnect the battery negative cable from the battery.
2. Disconnect the battery positive cable and the leads from the starter.
3. Remove the starter from the engine.
4. Remove the connecting lead (2) from the starter **C** terminal (1).
5. Connect a jumper lead from the connecting lead (2) to the battery positive terminal post.
6. Connect a jumper lead momentarily between the starter motor housing and the battery negative terminal post.
7. If the motor does not run, check the motor.

(1) **C** Terminal
(1) Connecting Lead

W10398570

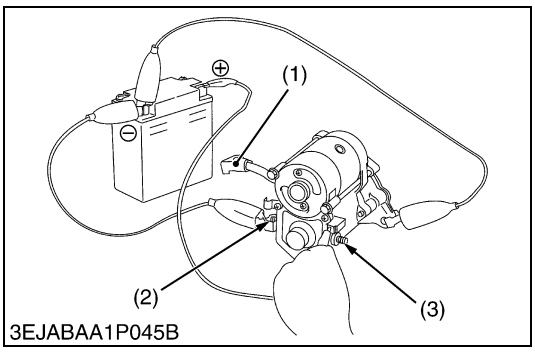

Magnet Switch Test

1. Disconnect the battery negative cable from the battery.
2. Disconnect the battery positive cable and the leads from the starter **M** terminal.
3. Remove the starter from the engine.
4. Disconnect the connecting lead (1) from the starter **C** terminal (2).
5. Connect a jumper lead from the starter **S** terminal (3) to the battery positive terminal post.
6. Connect a jumper lead momentarily between the starter **C** terminal (2) and the battery negative terminal post.
7. If the pinion gear does not pop out, check the magnetic switch.

■ **NOTE**

- **This test should be carried out for a short time, about 3 to 5 seconds.**

(1) Connecting Lead
(2) **C** Terminal
(3) **S** Terminal

W10400860

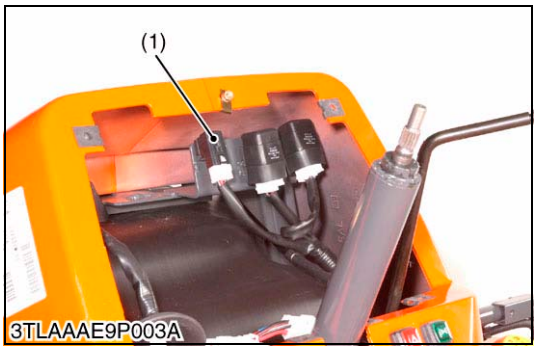

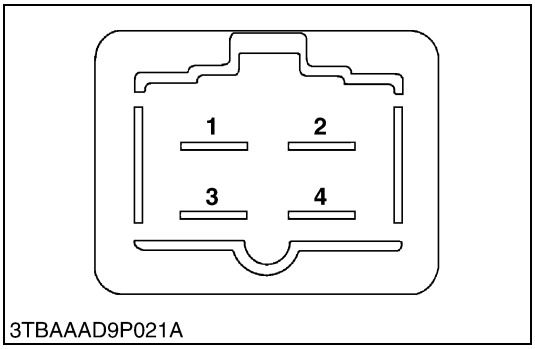

Starter Relay

1. Open the panel board and remove the starter relay (1).
2. Apply battery voltage across terminal **2** and **4**, and check for continuity across terminal **1** and **3**.
3. If 0 ohm is not indicated, renew the starter relay (1).

Resistance	Terminal **1** -Terminal **3**	0 Ω

(1) Starter Relay

W10488920

(5) Glow Control System

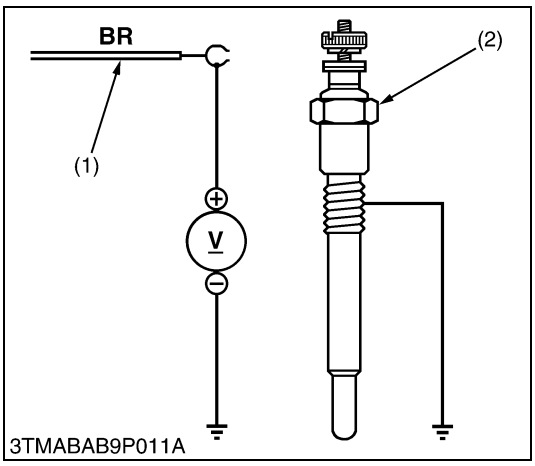

Glow Plug Lead Terminal Voltage

1. Disconnect the wiring lead (1) from the glow plug (2) after turning the main switch off.
2. Turn the main switch key to the **"PREHEAT"** position, and measure the voltage between the lead terminal and the chassis.
3. Turn the main switch key to the **"START"** position, and measure the voltage between the lead terminal and the chassis.
4. If the voltage at either position differs from the battery voltage, the wiring harness or main switch is faulty.

Voltage (Lead terminal - Chassis)	Main switch key at **"PREHEAT"**	Approx. battery voltage
	Main switch key at **"START"**	Approx. battery voltage

(1) Wiring Lead (Positive)
(2) Glow Plug

W10491110

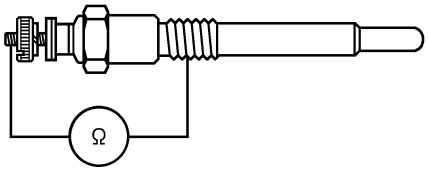

3TMABAB9P012A

Glow Plug Continuity

1. Disconnect the lead from the glow plugs.
2. Measure the resistance between the glow plug terminal and the chassis.
3. If 0 ohm is indicated, the screw at the tip of the glow plug and the housing are short-circuited.
4. If the factory specification is not indicated, the glow plug is faulty.

Glow plug resistance	Factory spec.	Approx. 0.9 Ω

W10559180

(6) Engine Stop Solenoid

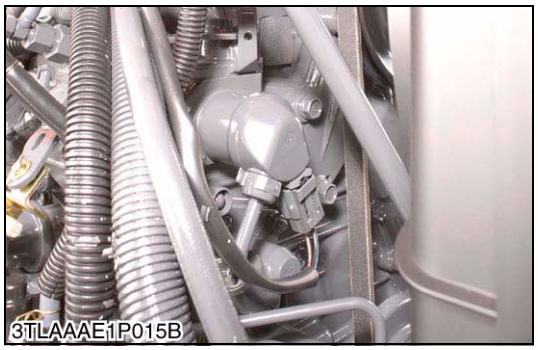
3TLAAAE1P015B

Connector Voltage

1. Disconnect the **2P** connector from engine stop solenoid.
2. Turn the main switch key to the **"ON"** position.
3. Measure the voltage between the terminal **1**, terminal **2** and body.
4. If the voltage differs from the battery voltage, the wiring harness of main switch is faulty.

Voltage	Terminal **1** -Body	Approx. battery voltage
	Terminal **2** -Body	

(1) Terminal **1** (2) Terminal **2**

W10561170

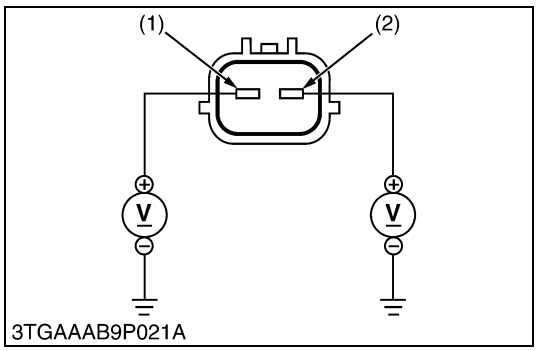

3TGAAAB9P021A

Stop Solenoid Coil

1. Disconnect the **2P** connector from engine stop solenoid.
2. Measure the resistance between the terminal **1**, terminal **2** and body.
3. If resistance differs from factory specification, the coil is faulty.

Resistance	Terminal **1** -Body	Approx. 0.375 Ω
	Terminal **2** -Body	Approx. 15.6 Ω

(1) Terminal **1** (Pulling Coil) (2) Terminal **2** (Holding Coil)

W1071223

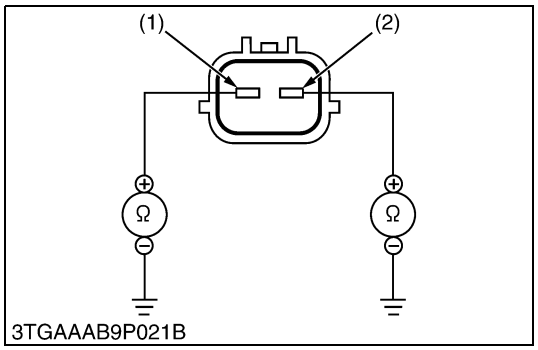

3TGAAAB9P021B

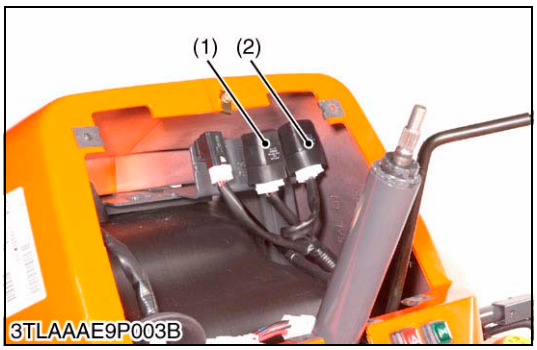

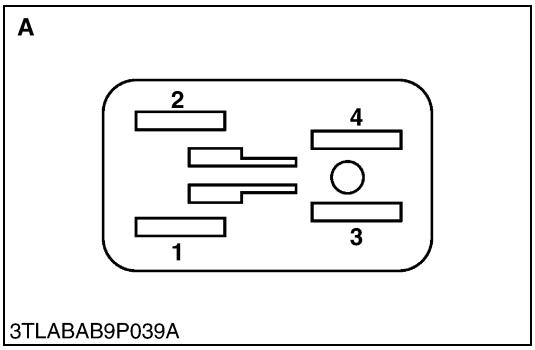

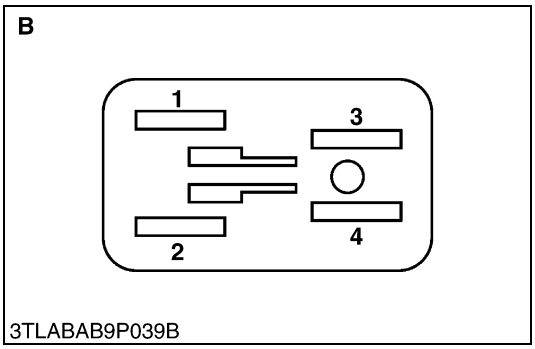

Glow Relay (Lamp Relay / Key Stop Solenoid Relay)

1. Turn the main switch off.
2. Disconnect the **4P** connector from glow relay.
3. Measure the voltage across the terminal **3** (Positive) and chassis (Negative).
4. If the voltage differs from the battery voltage, the wiring harness is faulty.
5. Turn the main switch on.
6. Measure the voltage across the terminal **1** (Positive) and chassis (Negative).
7. If the voltage differs from the battery voltage, the wiring harness is faulty.

(1) Glow Relay (Lamp Relay)
(2) Glow Relay (Key Stop Solenoid Relay)

A : Connector of Wire Harness Side
B : Connector of Glow Relay

W1071750

(7) Charging System

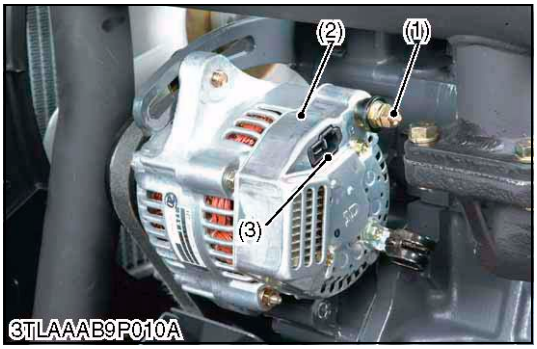

Alternator

1. Disconnect the **2P** connector (3) from alternator after turning the main switch **"OFF"**.
2. Perform the following checkings.

(1) **B** Terminal
(2) Alternator
(3) **2P** Connector

W1072672

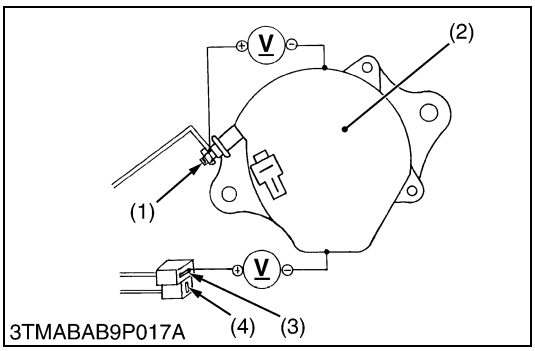

Connector Voltage

1. Turn the main switch **"OFF"**. Measure the voltage between the **B** terminal (1) and the chassis.
2. Turn the main switch **"ON"**. Measure the voltage between the **IG** terminal (3) and the chassis.

Voltage (Main switch at **OFF**)	**B** terminal - Chassis	Approx. battery voltage
Voltage (Main switch at **ON**)	**IG** terminal - Chassis	Approx. battery voltage

(1) **B** Terminal
(2) Alternator
(3) **IG** Terminal
(4) **L** Terminal

W1073892

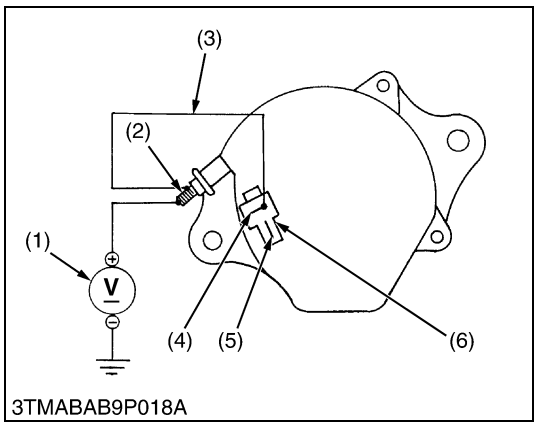

No-Load Test

1. Connect the **2P** connector (6) to previous positions of the alternator after turning the main switch **"OFF"**.
2. Connect the jumper lead (3) between **IG** terminal (4) and **B** terminal (2).
3. Start the engine and then set at idling speed.
4. Disconnect the negative cable from the battery.
5. Measure the voltage between the **B** terminal (2) and the chassis.
6. If the measurement is less than the factory specifications, disassemble the alternator and check the IC regulator.

Voltage	Factory spec.	More than 14 V

(Reference)

- Once the engine has started, the alternator temperature rises quickly up to an ambient temperature of 70 to 90 °C (158 to 194 °F). As the temperature goes higher than 50 °C (122 °F), the alternator voltage slowly drops; at higher than 100 °C (212 °F), it drops by about 1 V.

(1) Voltmeter
(2) **B** Terminal
(3) Jumper Lead
(4) **IG** Terminal
(5) **L** Terminal
(6) **2P** Connector

W1074423

(8) Combination Switch

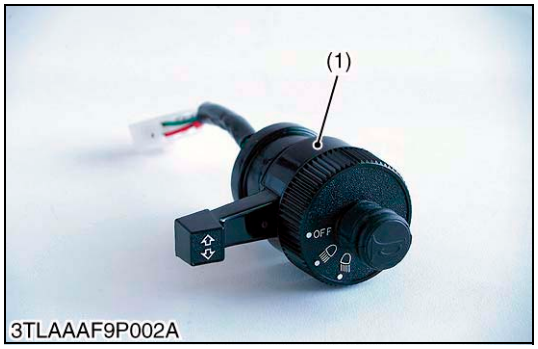

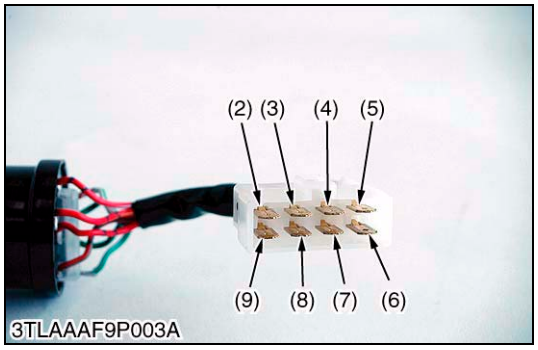

Combination Switch

1. Remove the meter panel, and disconnect the combination switch connector.
2. Remove the combination switch (1) and perform the following checks **1)** to **8)**.

(1) Combination Switch
(2) **B1** Terminal
(3) **T** Terminal
(4) **2** Terminal
(5) **1** Terminal
(6) **H** Terminal
(7) **L** Terminal
(8) **R** Terminal
(9) **B2** Terminal

W1049462

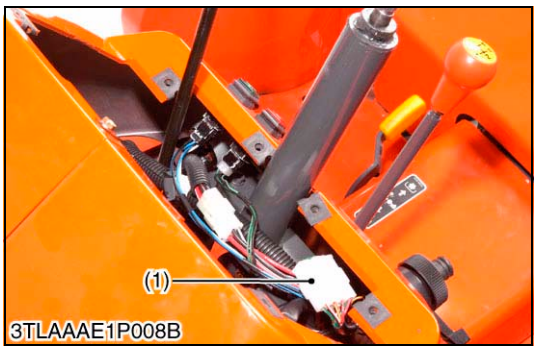

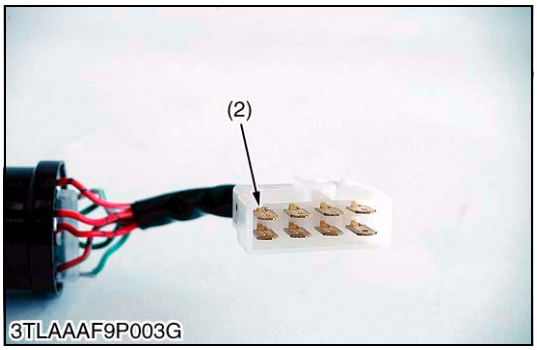

1) Connector Voltage

1. Connect the combination switch connector to the main wire harness.
2. Measure the voltage with a voltmeter between the connector **B1** terminal (2) and chassis when the main switch is **"ON"** position.
3. If the voltage differs from the battery voltage, the wiring harness and main switch is faulty.

(1) Combination Switch Connector (2) **B1** Terminal

W1050272

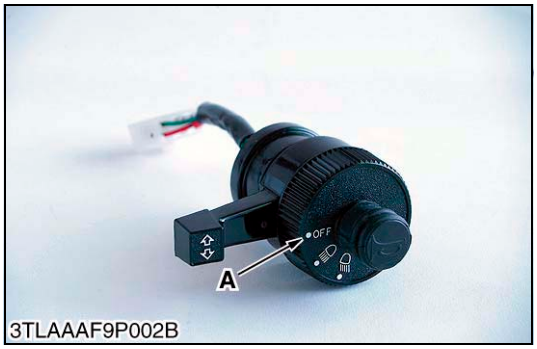

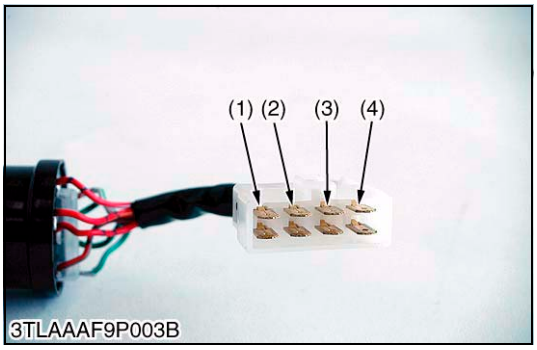

2) Head Light Switch Continuity when Setting Switch in OFF Position

1. Set the light switch in **"OFF"** position.
2. Measure the resistance with an ohmmeter between the **B1** terminal (1) and the **T** terminal (2), the **B1** terminal (1) and the **2** terminal (3), the **B1** terminal (1) and the **1** terminal (4).
3. If infinity is not indicated, the head light switch is faulty.

Resistance (Switch in **OFF** position)	**B1** terminal - **T** terminal	Infinity
	B1 terminal - 2 terminal	
	B1 terminal - **1** terminal	

(1) **B1** Terminal
(2) **T** Terminal
(3) **2** Terminal
(4) **1** Terminal

A : Head Light "OFF"

W1050981

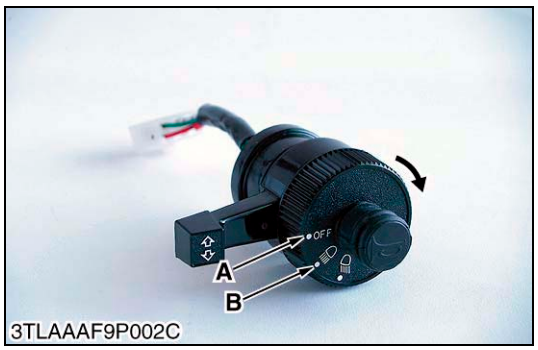

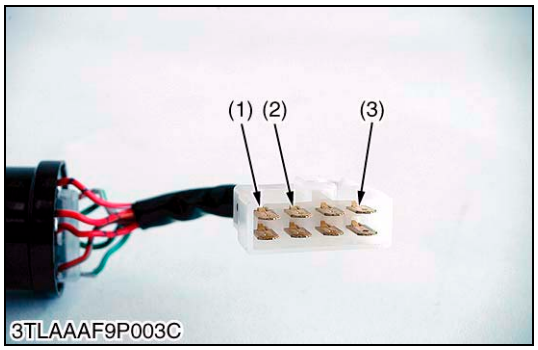

3) Head Light Switch Continuity when Setting Switch in HI-BEAM Position

1. Set the light switch in **"HI-BEAM"** position.
2. Measure the resistance with an ohmmeter between the **B1** terminal (1) and the **T** terminal (2), the **B1** terminal (1) and the **1** terminal (3).
3. If 0 Ω is not indicated, the head light switch is faulty.

Resistance (Switch in **HI-BEAM** position)	**B1** terminal - **T** terminal	0 Ω
	B1 terminal - **2** terminal	

(1) **B1** Terminal
(2) **T** Terminal
(3) **1** Terminal

A : Head Light "OFF"
B : Head Light "ON (HI-BEAM)"

W1092685

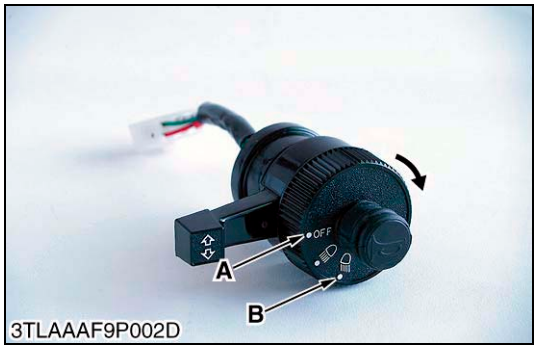

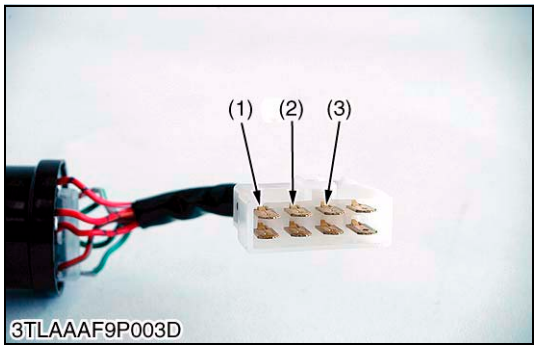

4) Head Light Switch Continuity when Setting Switch in LO-BEAM Position

1. Set the light switch in **"LO-BEAM"** position.
2. Measure the resistance with an ohmmeter between the **B1** terminal (1) and the **T** terminal (2), the **B1** terminal (1) and the **2** terminal (3).
3. If 0 Ω is not indicated, the head light switch is faulty.

Resistance (Switch in **LO-BEAM** position)	**B1** terminal - **T** terminal	0 Ω
	B1 terminal - **2** terminal	

(1) **B1** Terminal
(2) **T** Terminal
(3) **1** Terminal

A : Head Light "OFF"
B : Head Light "ON (LO-BEAM)"

W1051881

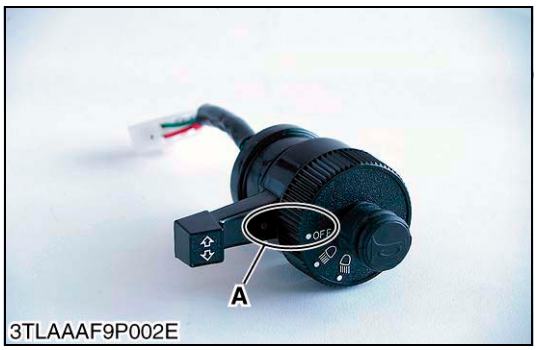

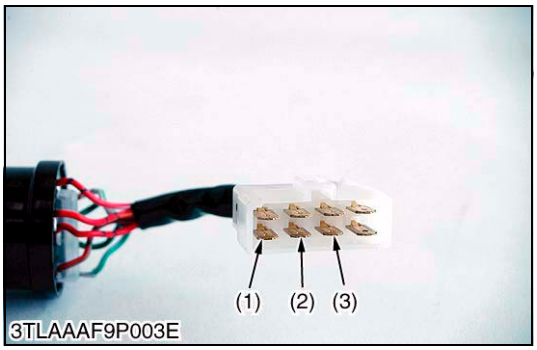

5) Turn Signal Light Switch Continuity When Setting Switch Knob in OFF Position

1. Set the flasher switch knob in **"OFF:** position.
2. Measure the resistance with an ohmmeter between the **B2** terminal (1) and the **R** terminal (2), the **B2** terminal (1) and the **L** terminal (3).
3. If infinity is not indicated, the combination switch is faulty.

Resistance (Switch knob in **OFF** position)	**B2** terminal - **R** terminal	Infinity
	B2 terminal - **L** terminal	

(1) **B2** Terminal
(2) **R** Terminal
(3) **L** Terminal

A : Turn Signal Light "OFF"

W1101684

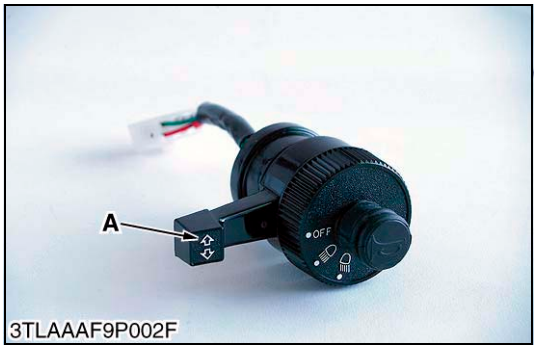

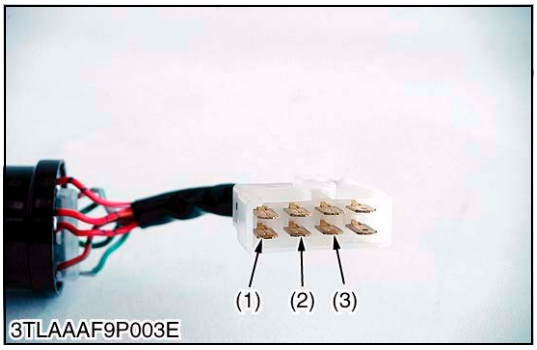

6) Turn Signal Light Switch Continuity When Setting Switch Knob in "RIGHT TURN" Position

1. Set the flasher switch knob in **"RIGHT TURN"** position.
2. Measure the resistance with an ohmmeter between the **B2** terminal (1) and the **R** terminal (2), the **B2** terminal (1) and the **L** terminal (3).
3. If 0 Ω is not indicated, the combination switch is faulty.

Resistance (Switch knob in **RIGHT TURN** position)	**B2** terminal - **R** terminal	0 Ω
	B2 terminal - **L** terminal	Infinity

(1) **B2** Terminal
(2) **R** Terminal
(3) **L** Terminal

A : Turn Signal Light "ON (RIGHT TURN)"

W1105114

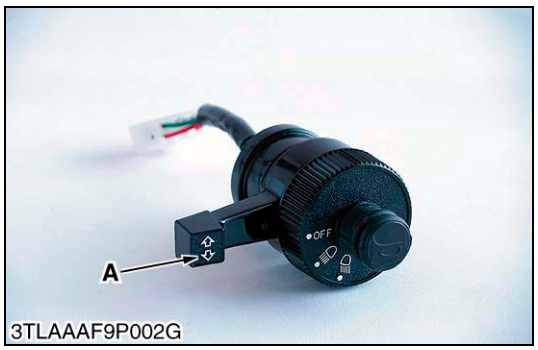

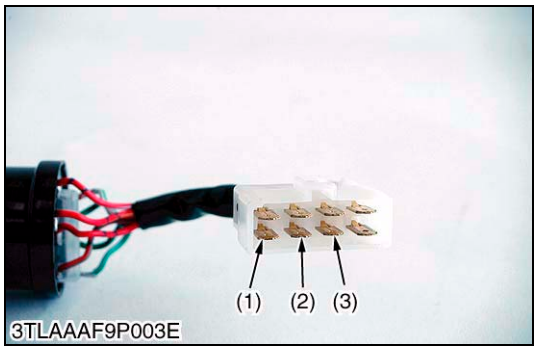

7) Turn Signal Light Switch Continuity When Setting Switch Knob in "LEFT TURN" Position

1. Set the flasher switch knob in **"LEFT TURN"** position.
2. Measure the resistance with an ohmmeter between the **B2** terminal (1) and the **L** terminal (2), the **B2** terminal (1) and the **R** terminal (3).
3. If 0 Ω is not indicated, the combination switch is faulty.

Resistance (Switch knob in **LEFT TURN** position)	**B2** terminal - **L** terminal	0 Ω
	B2 terminal - **R** terminal	Infinity

(1) **B2** Terminal
(2) **R** Terminal
(3) **L** Terminal

A : Turn Signal Light "ON (LEFT TURN)"

W1106661

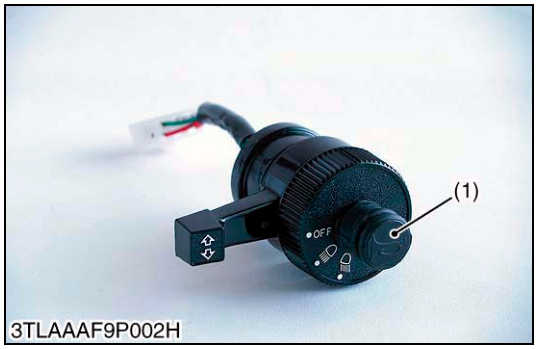

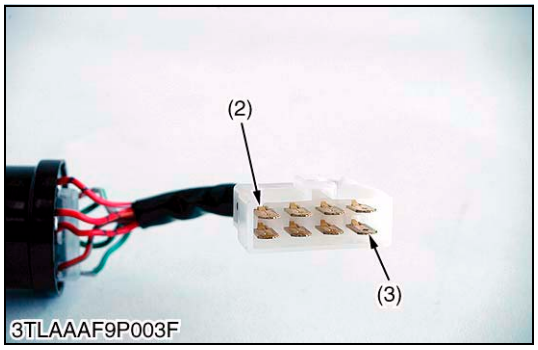

8) Horn Switch Continuity When Setting Switch Button in "ON" Position

1. Push the horn button (1).
2. Measure the resistance with an ohmmeter across the **B1** terminal (2) and **H** terminal (3).
3. If 0 Ω is not indicated, the horn button is faulty.

Resistance (Horn button is pushed position)	**B1** terminal - **H** terminal	0 Ω

(1) Horn Button
(2) **B1** Terminal
(3) **H** Terminal

W1107877

(9) Hazard Switch

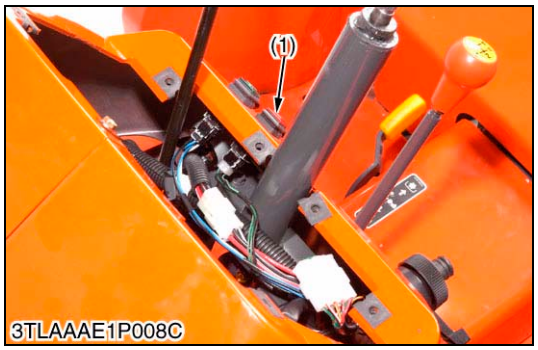

Hazard Switch

1. Disconnect the battery negative cable.
2. Remove the meter panel and disconnect the **4P** connector from hazard switch (1).
3. Remove the hazard switch (1).
4. Check the hazard switch continuity.

(1) Hazard Switch

W1046485

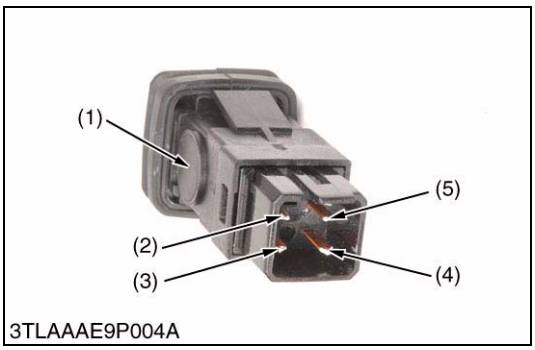

Hazard Switch Continuity

1. Measure the resistance with ohmmeter between the terminal **a** and terminal **c**, between the terminal **d** and terminal **e**.
2. If measurement is not the same as the following, the hazard switch or the bulb is faulty.

Resistance (Switch at **OFF**)	Terminal **a** – Terminal **c**	Infinity
Resistance (Switch at **ON**)	Terminal **a** – Terminal **c**	0 Ω
Resistance (Bulb)	Terminal **d** – Terminal **e**	Approx. 40 Ω

(1) Bulb
(2) Terminal **a**
(3) Terminal **c**
(4) Terminal **e**
(5) Terminal **d**

W1047271

(10) Parking (Position) Switch

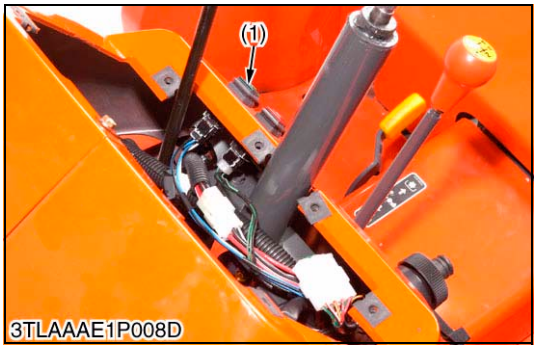

Parking (Position) Switch

1. Disconnect the battery negative cable.
2. Remove the meter panel and disconnect the connector from parking (position) switch (1).
3. Remove the parking (position) switch (1).
4. Check the parking (position) switch continuity.

(1) Parking (Position) Switch

W87645912

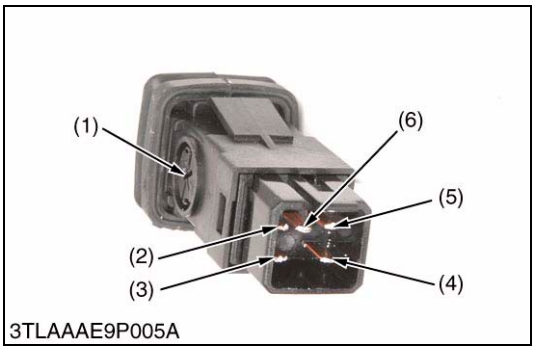

Parking (Position) Switch Continuity

1. Measure the resistance with ohmmeter between the terminal **a** and terminal **c**, between the terminal **d** and terminal **e**.
2. If measurement is not the same as the following, the parking (position) switch or the bulb is faulty.

Resistance (Switch at **OFF**)	Terminal **a** – Terminal **c**	Infinity
Resistance (Switch at **ON**)	Terminal **a** – Terminal **c**	0 Ω
Resistance (Bulb)	Terminal **d** – Terminal **e**	Approx. 13 Ω

(1) Bulb
(2) Terminal **a**
(3) Terminal **c**
(4) Terminal **e**
(5) Terminal **d**
(6) Terminal **b** (not used)

W1111657

(11) Flasher (Hazard) Unit

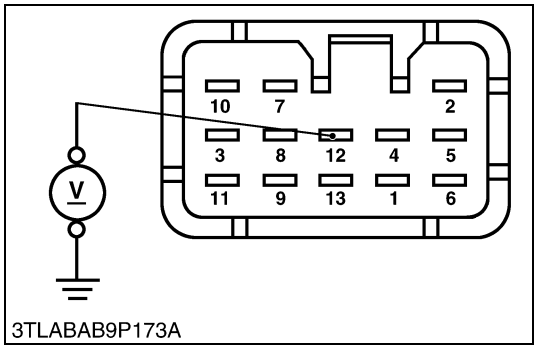

Flasher (Hazard) Unit

1. Disconnect the connector from the flasher unit.
2. Turn the main switch at **"ON"** position
3. Measure the voltage between the terminal **12** and chassis.
4. If the voltage differs from the battery voltage, the wiring harness is faulty.

Voltage	Terminal **12** - Chassis	Approx. battery voltage

(1) Flasher (Hazard) Unit

W1113383

(12) Fuel Level Sensor

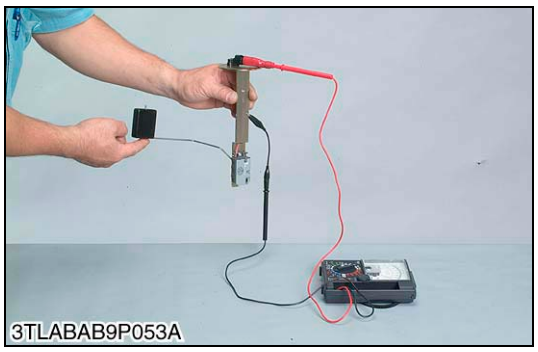

Fuel Level Sensor

1) Sensor Continuity

1. Remove the fuel level sensor from the fuel tank.
2. Measure the resistance across the sensor terminal and its body.
3. If the reference values are not indicated, the sensor is faulty.

Resistance (Sensor terminal – its body)	Reference value	Float at upper-most position	1 to 5 Ω
		Float at lower-most position	103 to 117 Ω

W1115428

(13) Coolant Temperature Sensor

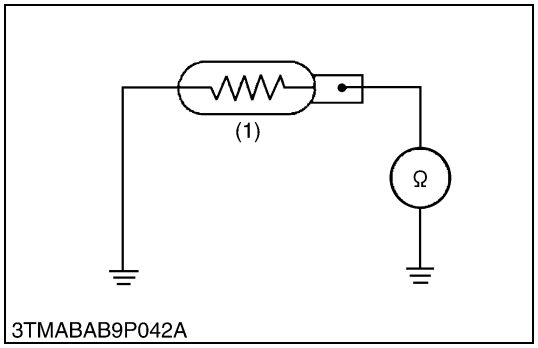

Coolant Temperature Sensor Continuity

1. Measure the resistance across the sensor terminal and the chassis.
2. If the measurement is not indicated, the sensor is faulty.

Resistance (Sensor terminal – Chassis)	Reference value	Approx. 16 Ω at 120 °C (248 °F) Approx. 50 Ω at 80 °C (176 °F) Approx. 149 Ω at 50 °C (122 °F)

(1) Coolant Temperature Sensor

W2356419

(14) Brake Light Switch

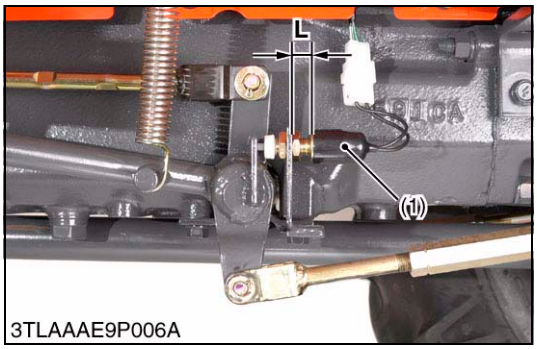

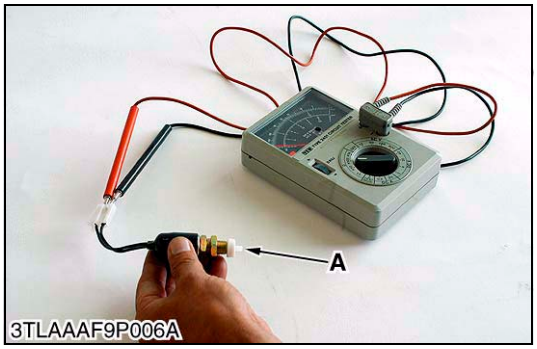

Brake Light Switch Continuity

1. Remove the brake light switch (1).
2. Connect the ohmmeter leads to the brake light switch terminals.
3. Measure the resistance between terminals.
4. If the measurement value is not the same as follows, the brake light switch is faulty.

Resistance between terminals	When brake light switch is not pushed (Switch in **"ON"** position)	0 Ω
	When brake light switch is pushed (Switch in **"OFF"** position)	Infinity

(When reassembling)

- First, adjust the brake pedal free travel, then make sure that the brake lights are **"ON"** when the brake pedals are depressed almost at the end of the brake pedal free travel.

(1) Brake Light Switch

A : Push
L : Reference Value
10 to 11 mm (0.39 to 0.43 in.)

W1119997

(15) Trailer Socket

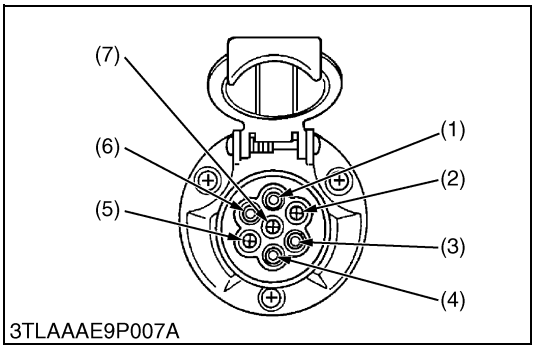

Trailer Socket

The trailer socket is provided to take out the electrical power from tractor to trailer or implement.

The function of each terminal is shown below.

Terminal	Function	Color of wire harness
(1)	Turn signal (**LH**)	Green / White
(2)	–	–
(3)	Ground	Black
(4)	Turn signal (**RH**)	Red / White
(5)	Tail (**RH**)	Yellow / Red
(6)	Brake	Yellow
(7)	Tail (**LH**)	Yellow / White

(1) Terminal **1**
(2) Terminal **2**
(3) Terminal **3**
(4) Terminal **4**
(5) Terminal **5**
(6) Terminal **6**
(7) Terminal **7**

W1118849

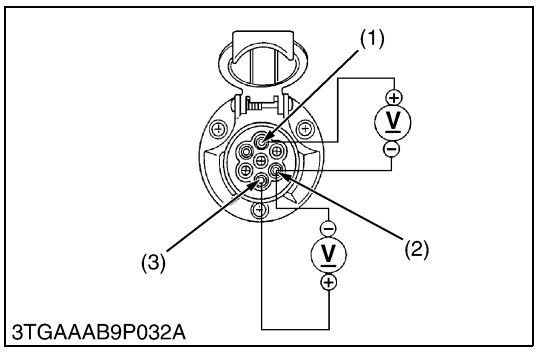

1) Turning Signal Terminals

1. Turn the main switch **"ON"**, and measure the voltage with voltmeter across the **1** terminal (1) and **3** terminal (2), and across the **4** terminal (3) and **3** terminal (2).
2. If the voltage differs from the battery voltage, the wiring harness or switches for turning signal are faulty.

Voltage (Turning signal switch at **L** or hazard switch at **ON**)	**1** terminal (Green / White) – **3** terminal (Black)	Approx. battery voltage (Intermittently)
Voltage (Turning signal switch at **R** or hazard switch at **ON**)	**4** terminal (Red / White) – **3** terminal (Black)	Approx. battery voltage (Intermittently)

(1) **1** Terminal
(2) **3** Terminal
(3) **4** Terminal

W1025340

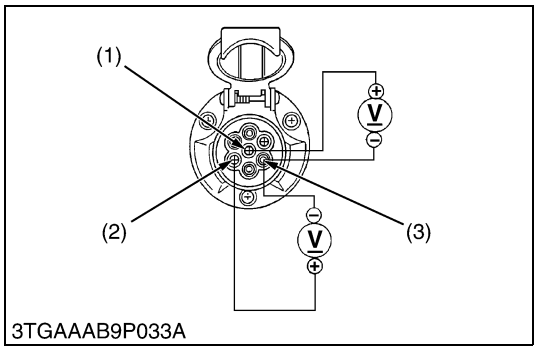

2) Tail Terminals

1. Turn the main switch **"ON"**, and measure the voltage with voltmeter across the **7** terminal (1) and **5** terminal (2), and across the **5** terminal (2) and **3** terminal (3).
2. If the voltage differs from battery voltage, the wiring harness or switches for tail lights are faulty.

Voltage (Head switch at ON or position switch at **ON**)	**7** terminal (Yellow / White) – **5** terminal (Yellow / Red)	Approx. battery voltage
Voltage (Head light switch at **ON** or position switch at **ON**)	**5** terminal (Yellow / Red) – **3** terminal (Black)	Approx. battery voltage

(1) **7** Terminal
(2) **5** Terminal
(3) **3** Terminal

W1025660

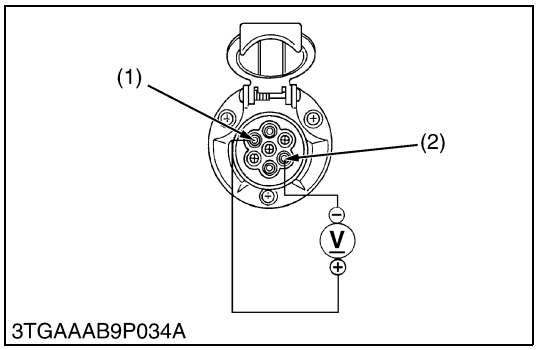

3) Brake Light Terminal

1. Turn the main switch **"ON"**, and measure the voltage with voltmeter across the **6** terminal (1) and **3** terminal (2).
2. If the voltage differs from battery voltage, the wiring harness or switch for brake lights are faulty.

Voltage (When stepping the brake pedal)	**6** terminal (Yellow) – **3** terminal (Black)	Approx. battery voltage

(1) **6** Terminal
(2) **3** Terminal

W1026040

[2] DISASSEMBLING AND ASSEMBLING

(1) Starter

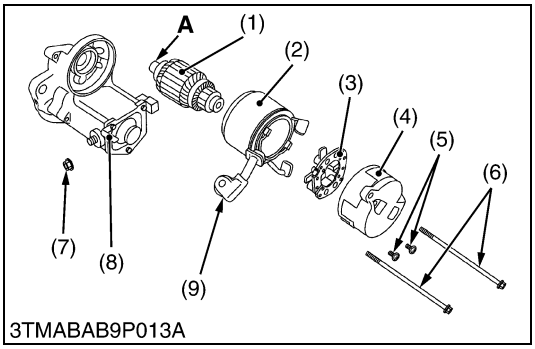

3TMABAB9P013A

Disassembling Motor

1. Disconnect the connecting lead (9) from the magnet switch (8).
2. Remove the screws (6), and then separate the end frame (4), yoke (2) and armature (1).
3. Remove the two screws (5), and then remove the brush holder (3) from the end frame (4).

(When reassembling)

- Apply grease to the spline teeth (**A**) of the armature (1).

(1) Armature
(2) Yoke
(3) Brush Holder
(4) End Frame
(5) Screw
(6) Screw
(7) Nut
(8) Magnet Switch
(9) Connecting Lead

A : Spline Teeth

W1016288

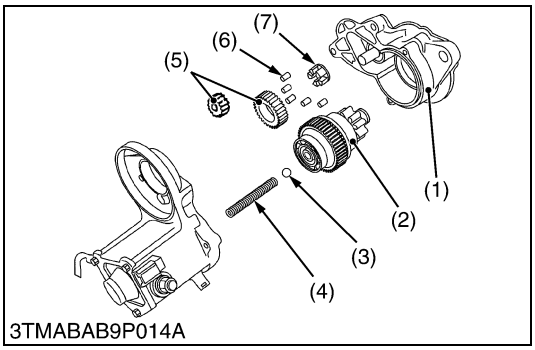

3TMABAB9P014A

Disassembling Magnet Switch

1. Remove the drive end frame (1) mounting screws.
2. Remove the overrunning clutch (2), ball (3), spring (4), gears (5), rollers (6) and retainer (7).

(When reassembling)

- Apply grease to the gear teeth of the gears (5) and overrunning clutch (2), and ball (3).

(1) Drive End Frame
(2) Overrunning Clutch
(3) Ball
(4) Spring
(5) Gear
(6) Roller
(7) Retainer

W1016728

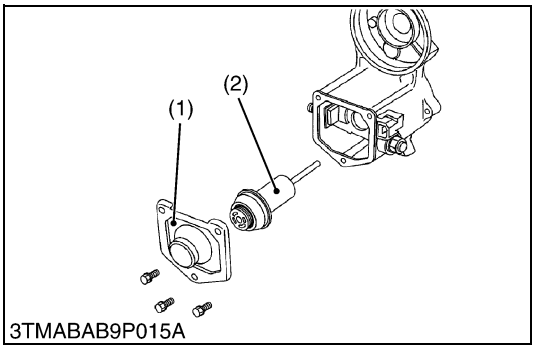

3TMABAB9P015A

Plunger

1. Remove the end cover (1).
2. Remove the plunger (2).

(1) End Cover
(2) Plunger

W1016883

(2) Alternator

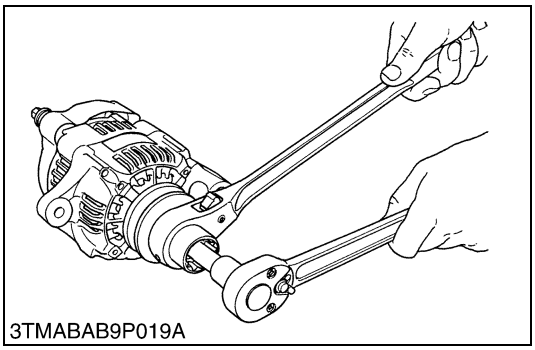
3TMABAB9P019A

Pulley

1. Secure the hexagonal end of the pulley shaft with a double-ended ratchet wrench as shown in the figure, loosen the pulley nut with a socket wrench and remove it.

(When reassembling)

Tightening torque	Pulley nut	58.3 to 78.9 N·m 5.95 to 8.05 kgf·m 43.0 to 58.2 ft-lbs

W10187280

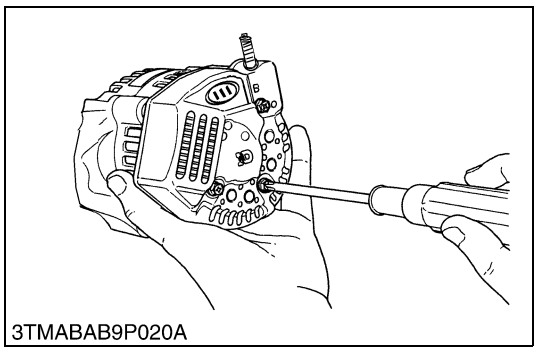
3TMABAB9P020A

Rear End Cover

1. Unscrew the three rear end cover screws and the **B** terminal nut, and remove the rear end cover.

W10189820

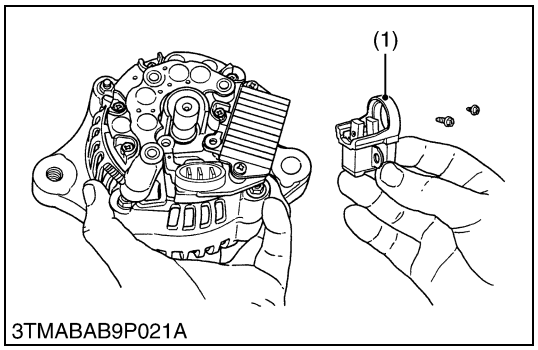

3TMABAB9P021A

Brush Holder

1. Unscrew the two screws holding the brush holder, and remove the brush holder (1).

(1) Brush Holder

W10190540

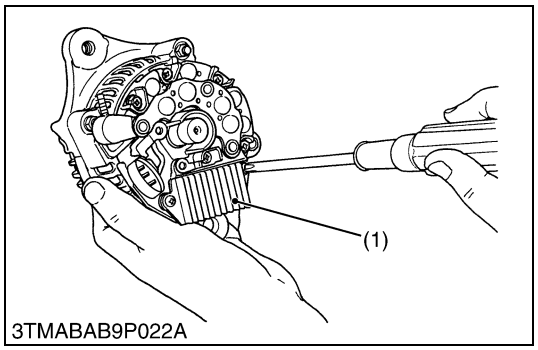

3TMABAB9P022A

IC Regulator

1. Unscrew the three screws holding the IC regulator, and remove the IC regulator (1).

(1) IC Regulator

W10191230

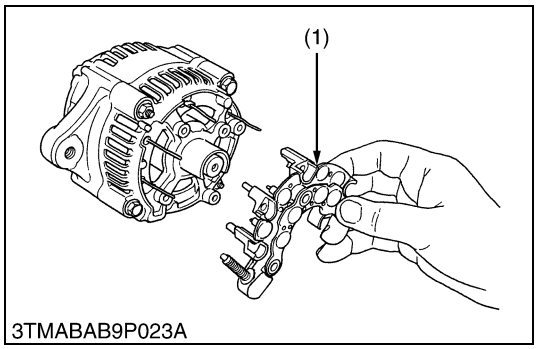

3TMABAB9P023A

Rectifier

1. Remove the four screws holding the rectifier and the stator lead wires.
2. Remove the rectifier (1).

(1) Rectifier

W10191920

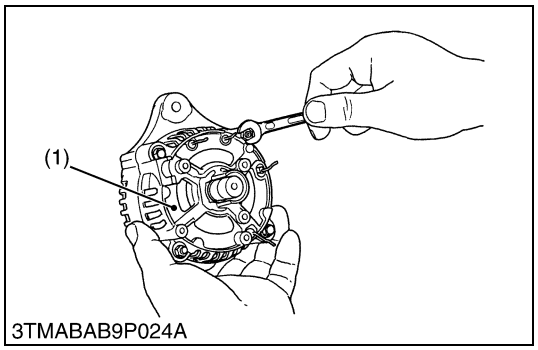

3TMABAB9P024A

Rear End Frame

1. Unscrew the two nuts and two screws holding the drive end frame and the rear end frame.
2. Remove the rear end frame (1).

(1) Rear End Frame

W10192740

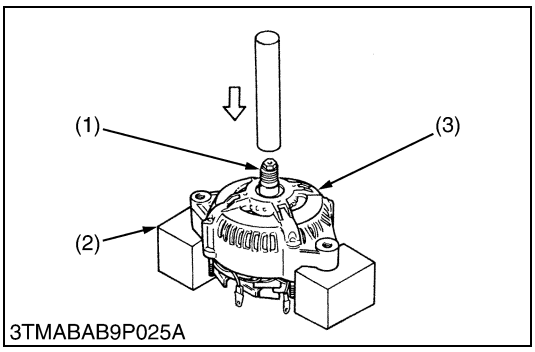

3TMABAB9P025A

Rotor

1. Press out the rotor (1) from drive end frame (3).

■ **IMPORTANT**

- **Take special care not to drop the rotor and damage the slip ring or fan, etc..**

(1) Rotor
(2) Block
(3) Drive End Frame

W10194380

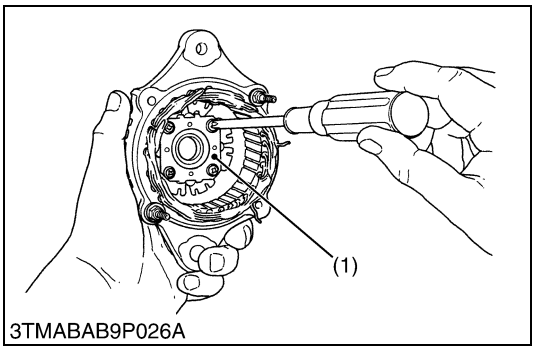

3TMABAB9P026A

Retainer Plate

1. Unscrew the four screws holding the retainer plate, and remove the retainer plate (1).

(1) Retainer Plate

W10195420

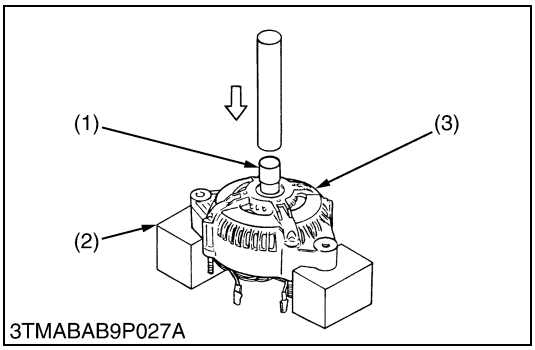

3TMABAB9P027A

Bearing on Drive End Side

1. Press out the bearing from drive end frame (3) with a press and jig (1).

(1) Jig
(2) Block
(3) Drive End Frame

W10196110

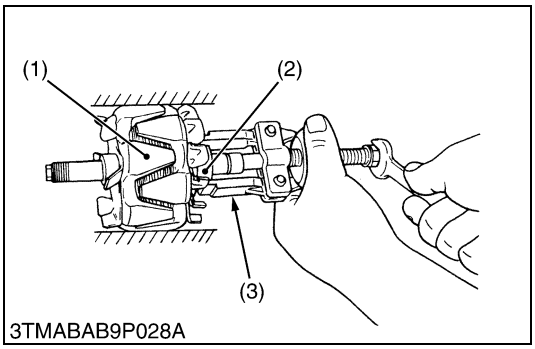

3TMABAB9P028A

Bearing at Slip Ring Side

1. Lightly secure the rotor (1) with a vise to prevent damage, and remove the bearing (2) with a puller (3).

(1) Rotor
(2) Bearing
(3) Puller

W10197010

[3] SERVICING

(1) Starter

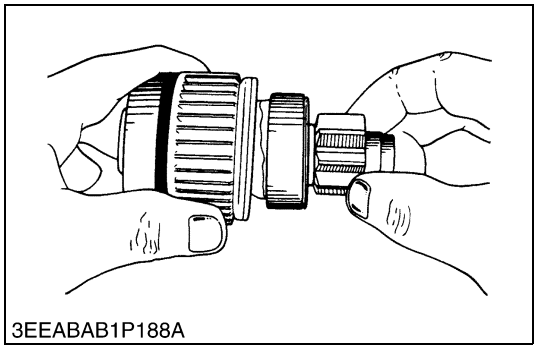
3EEABAB1P188A

Overrunning Clutch

1. Inspect the pinion for wear or damage.
2. If there is any defect, replace the overrunning clutch assembly.
3. Check that the pinion turns freely and smoothly in the overrunning direction and does not slip in the cranking direction.
4. If the pinion slips or does not rotate in the both directions, replace the overrunning clutch assembly.

W1016990

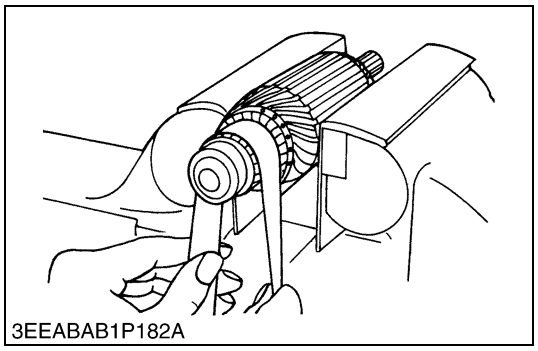
3EEABAB1P182A

Commutator and Mica

1. Check the contact face of the commutator for wear, and reface the commutator with emery paper if it is slightly worn.
2. Measure the commutator O.D. with an outside micrometer at several points.
3. If the minimum O.D. is less than the allowable limit, replace the armature.
4. If the difference of the O.D.'s exceeds the allowable limit, correct the commutator on a lathe to the factory specification.
5. Measure the mica undercut.
6. If the undercut is less than the allowable limit, correct it with a saw blade and chamfer the segment edges.

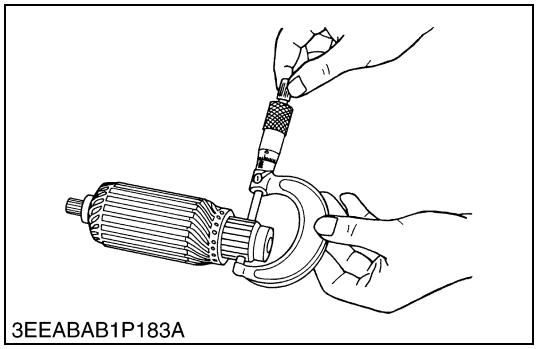
3EEABAB1P183A

Commutator O.D.	Factory spec.	30.0 mm 1.181 in.
	Allowable limit	29.0 mm 1.142 in.

Difference of O.D.'s	Factory spec.	Less than 0.02 mm 0.0008 in.
	Allowable limit	0.05 mm 0.0020 in.

Mica undercut	Factory spec.	0.50 to 0.80 mm 0.0197 to 0.0315 in.
	Allowable limit	0.20 mm 0.0079 in.

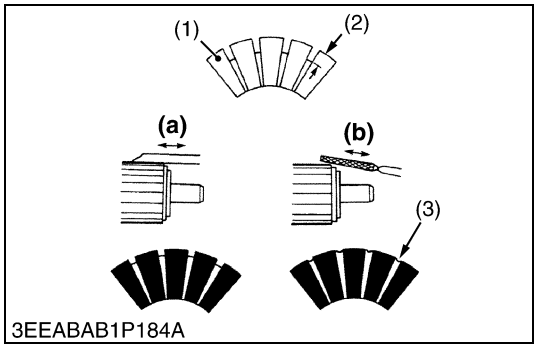

3EEABAB1P184A

(1) Segment
(2) Undercut
(3) Mica

(a) Correct
(b) Incorrect

W1017092

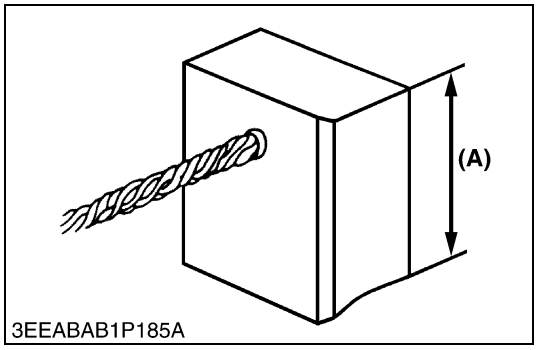

3EEABAB1P185A

Brush Wear

1. If the contact face of the brush is dirty or dusty, clean it with emery paper.
2. Measure the brush length **(A)** with vernier calipers.
3. If the length is less than the allowable limit, replace the yoke assembly and brush holder.

Brush length **(A)**	Factory spec.	15.0 mm 0.591 in.
	Allowable limit	11.0 mm 0.433 in.

W1017544

https://truckmanualshub.com/

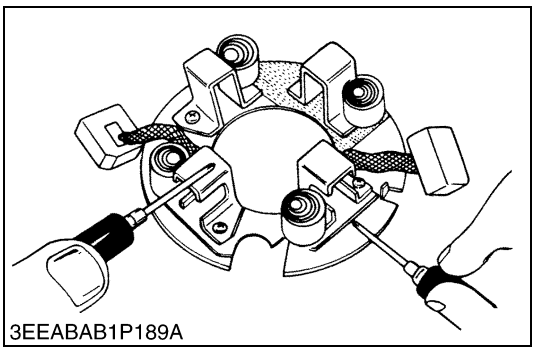
3EEABAB1P189A

Brush Holder

1. Check the continuity across the brush holder and the holder support with an ohmmeter.
2. If it conducts, replace the brush holder.

Resistance	Brush holder - Holder support	Infinity

W1017672

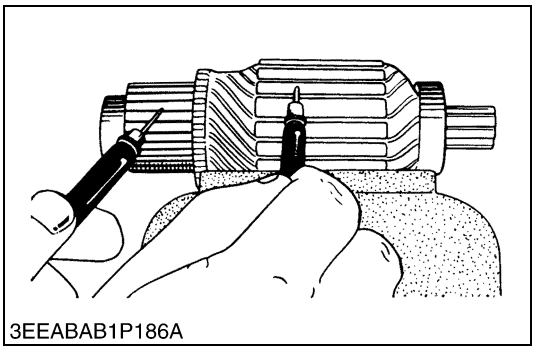
3EEABAB1P186A

Armature Coil

1. Check the continuity across the commutator and armature coil core with an ohmmeter.
2. If it conducts, replace the armature.
3. Check the continuity across the segments of the commutator with an ohmmeter.
4. If it does not conduct, replace the armature.

W1017767

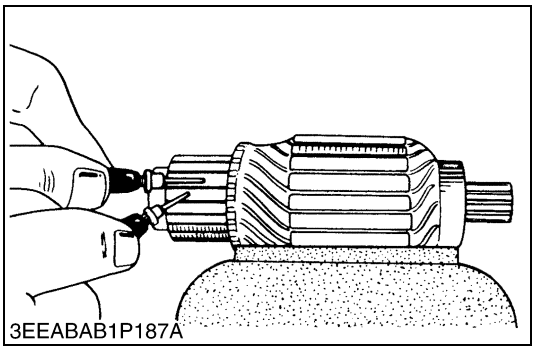
3EEABAB1P187A

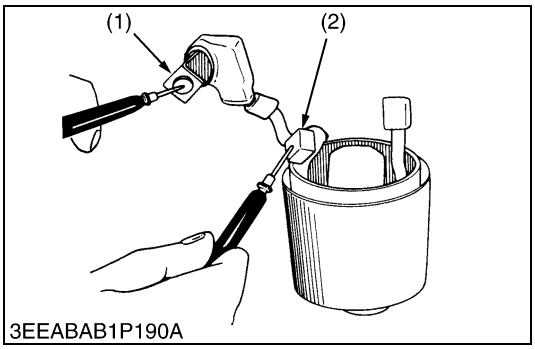

3EEABAB1P190A

Field Coil

1. Check the continuity across the lead (1) and brush (2) with an ohmmeter.
2. If it does not conduct, replace the yoke assembly.
3. Check the continuity across the brush (2) and yoke (3) with an ohmmeter.
4. If it conducts, replace the yoke assembly.

(1) Lead
(2) Brush
(3) Yoke

W1018015

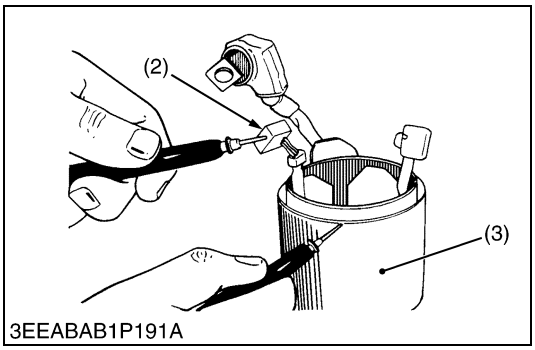

3EEABAB1P191A

(2) Alternator

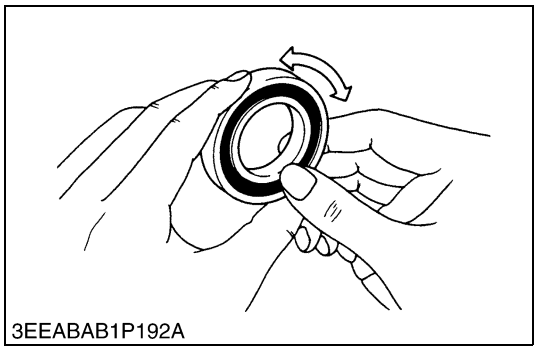
3EEABAB1P192A

Bearing

1. Check the bearing for smooth rotation.
2. If it does not rotate smoothly, replace it.

W10197900

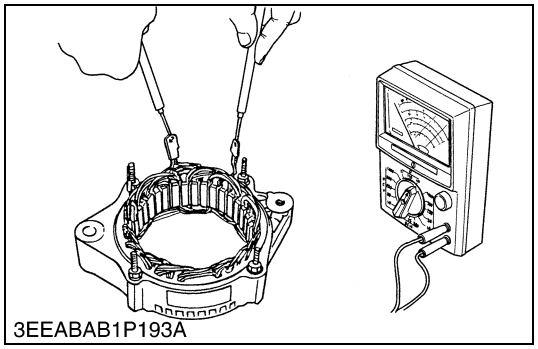
3EEABAB1P193A

Stator

1. Measure the resistance across each lead of the stator coil with an ohmmeter.
2. If the measurement is not within factory specification, replace it.
3. Check the continuity across each stator coil lead and core with an ohmmeter.
4. If infinity is not indicated, replace it.

Resistance	Factory spec.	Less than 1.0 Ω

W10199640

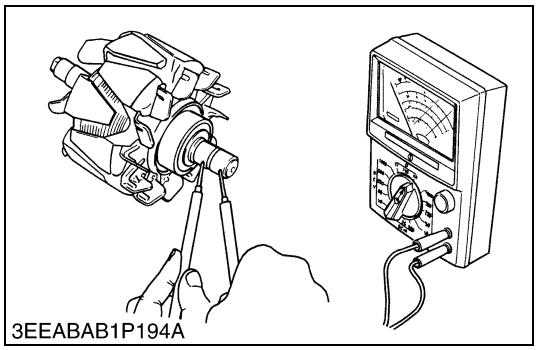
3EEABAB1P194A

Rotor

1. Measure the resistance across the slip rings with an ohmmeter.
2. If the resistance is not the factory specification, replace it.
3. Check the continuity across the slip ring and core with an ohmmeter.
4. If infinity is not indicated, replace it.

Resistance	Factory spec.	2.9 Ω

W10200940

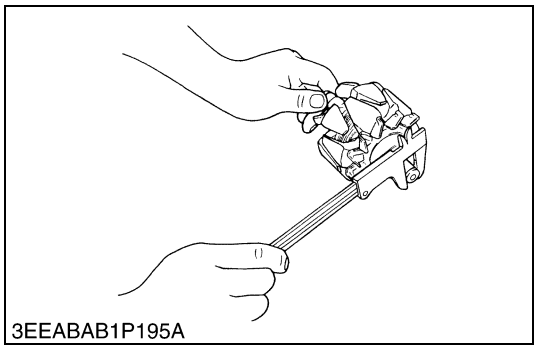
3EEABAB1P195A

Slip Ring

1. Check the slip ring for score marks.
2. If scored, correct with an emery paper or on a lathe.
3. Measure the O.D. of slip ring with vernier calipers.
4. If the measurement is less than the allowable limit, replace it.

Slip ring O.D.	Factory spec.	14.4 mm 0.567 in.
	Allowable limit	14.0 mm 0.551 in.

W10202080

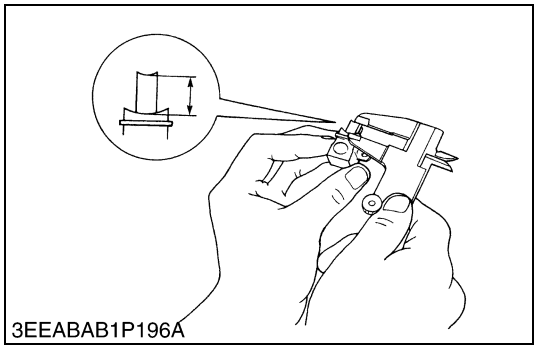
3EEABAB1P196A

Brush Wear

1. Measure the brush length with vernier calipers.
2. If the measurement is less than allowable limit, replace it.
3. Make sure that the brush moves smoothly.
4. If the brush is defective, replace it.

Brush length	Factory spec.	10.5 mm 0.413 in.
	Allowable limit	8.4 mm 0.331 in.

W10203290

https://truckmanualshub.com/

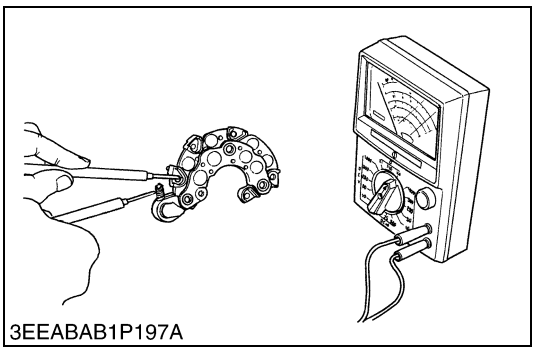
3EEABAB1P197A

Rectifier

1. Check the continuity across each diode of rectifier with an analog ohmmeter. Conduct the test in the (R × 1) setting.
2. The rectifier is normal if the diode in the rectifier conducts in one direction and does not conduct in the reverse direction.

■ **IMPORTANT**

- **Do not use a 500 V megger for measuring because it will destroy the rectifier.**

■ **NOTE**

- **Do not use an auto digital multimeter. Because it's very hard to check the continuity of rectifier by using it.**

W10204520

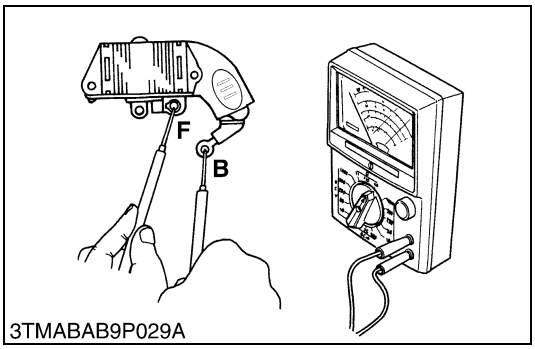

3TMABAB9P029A

IC Regulator

1. Check the continuity across the **B** terminal and the **F** terminal of IC regulator with an analog ohmmeter. Conduct the test in the (R × 1) setting.
2. The IC regulator is normal if the IC regulator conducts in one direction and does not conduct in the reverse direction.

■ **IMPORTANT**

- **Do not use a 500 V megger for measuring because it will destroy the IC regulator.**

■ **NOTE**

- **Do not use an auto digital multimeter. Because it's very hard to check the continuity of IC regulator by using it.**

W10206450

https://truckmanualshub.com/

EDITOR:
KUBOTA FARM & INDUSTRIAL MACHINERY SERVICE, LTD.
64, ISHIZU-KITAMACHI, SAKAI-KU, SAKAI-CITY, OSAKA, 590-0823, JAPAN
PHONE : (81)72-241-1129
FAX : (81)72-245-2484
E-mail : ksos-pub@kubota.co.jp

KUBOTA Corporation

Printed in Japan 2006. 09, S, EI, EI, e Code No.9Y011-13601
2006. 05, S, EI, EI, e