https://truckmanualshub.com/

Nibbler

Model			KR1100TPR-2	KR1350TPR-40	KR1500TPR-50
Weight		lbs {kg}	5,690 {2,580}	8,270 {3,750}	11,460 {5,200}
Dimensions	A Overall length B Width C Diameter D Mouth width	ft-in {mm}	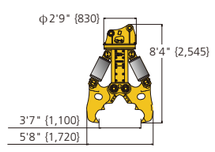	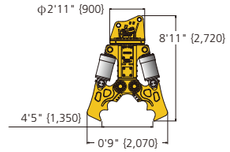	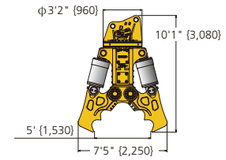
	Blade length	ft-in {mm}	0'8" {200}	0'8" {200}	0'8" {200}
Crushing force	Tip force	lbf {kN}	211,320 {940}	272,020 {1,210}	319,230 {1,420}
	Center	lbf {kN}	341,710 {1,520}	397,910 {1,770}	467,600 {2,080}
Assemble dimensions	Arm top width	ft-in {mm}	1'1" {325}	1'3" {380}	1'6" {450}
	Pin diameter	ft-in {mm}	ϕ0'3" {80}	ϕ0'4" {90}	ϕ0'4" {100}
Working hydraulic pressure		psi {MPa}	4,970 {34.3}	4,550 {31.4}	4,260 {29.4}

Note: Units follow the International System of Units (SI).

STANDARD EQUIPMENT

Note: Standard and optional equipment may vary. Consult your KOBELCO dealer for specifics.

ENGINE

SK350DLC / SK400DLC

- HINO J08EVV Tier IV final diesel engine with turbocharger and intercooler
- Batteries (2 x 12V - 96Ah)

SK550DLC

- HINO P11C-VN Tier IV final diesel engine with turbocharger and intercooler
- Batteries (2 x 12V - 176Ah)

COMMON FEATURERS

- Automatic engine deceleration
- Auto Idle Stop (AIS)
- Double element air cleaner
- Removable clean - out screen
- Starting motor (24V - 5 kW), 60 amp alternator
- Engine oil pan drain valve
- Side by side oil, hydraulic and engine radiators

CONTROL

- Working mode selector (H-mode, S-mode and ECO-mode)
- Power Boost (for use with separate boom specification)

HYDRAULIC

- Auto warm-up system
- Hydraulic oil cooler
- Hydraulic oil filter maintenance indicator
- Rotation and N&B auxiliary circuits and piping

SWING SYSTEM & TRAVEL SYSTEM

- Swing rebound prevention system
- Two-speed travel with automatic down shift
- Sealed & lubricated track links
- 800mm shoes (SK350DLC) / 600mm shoes (SK400DLC and SK550DLC)
- Grease-type track adjusters
- Automatic swing brake
- Hydraulic adjustable track frame (SK400DLC and SK550DLC)

MIRRORS, LIGHTS & CAMERAS

- Two rearview mirrors
- Rear-view camera
- Right side camera, additional monitor
- Three front working lights (1 on upper carriage, 2 on cab)
- Attachment front work light (separate boom: 2, ultra long attachment: 2)
- Swing flashers with 2 rear working lights
- Cab lower light
- Cab lower mirror

CAB & CONTROL

- Tilt cab with operation alarm and maintenance lock
- Cab emergency lowering device
- Demolition cab with one piece impact resistant front glass
- Cab interference prevention system
- All-weather, sound-insulated cab
- Automatic climate control with defrost
- Bar style front and top window guarding-opens for easy cleaning (Top guard FOPS level 2)
- Right side window guard
- Top and front window wiper
- Heated air suspension seat with headrest
- Easy to read multi-display monitor
- Tip-over warning device
- Console tilt
- Electric horn
- Travel alarm
- Public address system
- Bluetooth AM/FM Stereo
- Attachment pressure release switch
- Manual DPF regeneration switch
- 12 V converter
- Storage tray
- Large cup holder
- Detachable two-piece floor mat

SAFETY, GUARDING & ADDITIONAL FEATURES

- Remote machine monitoring system "KOMEXS"
- Boom & arm & jib cylinder holding valves
- Slow return check valves
- Bucket cylinder guards
- 9mm thick swivel guard
- 6mm thick upper belly guards
- Reinforced drive covers
- Full length track guards
- Side bumpers on upper
- Auto lubrication system
- Water spray for separate boom and ultra long attachment
- Ultra long or Separate Attachment stand
- NEXT pin removal / installation jig
- Falling object deflector
- Frame mounted tool box
- Handrails
- Emergency escape hammer
- Master battery disconnect

OPTIONAL EQUIPMENT

- Stand for 3.5m (2.4m) insert and 3.5m adapter
- Full track guides
- Extended guard rail (SK350DLC / SK400DLC)
- 700mm, 600mm shoes for SK350DLC
- Hydraulic oil for cold climates

Note: This document may contain attachments and optional equipment that are not available in your area. It may also contain photographs of machines with specifications that differ from those sold in your area.
Please contact your nearest KOBELCO dealer for items you require.
Due to our policy of continuous product improvement, all designs and specifications are subject to change without advance notice.

Copyright **KOBELCO CONSTRUCTION MACHINERY CO., LTD.** No part of this document may be reproduced in any manner without prior written permission from KOBELCO.

KOBELCO CONSTRUCTION MACHINERY U.S.A. INC.
22350 Merchants Way, Katy, Texas 77449
http://www.kobelco-usa.com/

Inquiries To:

Bulletin No. SK350DLC / SK400DLC / SK550DLC-10-NA-101

KOBELCO

DRIVEN BY PASSION

Building Demolition Machine

SK350DLC SK400DLC SK550DLC

SK350DLC-10 SK400DLC-10 SK550DLC-10

NEXT

Complies with the latest exhaust emission regulations

US EPA Tier IV Final | EU (NRMM) Stage IV | Japanese Regulations

https://truckmanualshub.com/

SK350DLC SK400DLC SK550DLC

GENERATION 10

Designed and built to save time and get you up and working!!

The KOBELCO demolition machine utilizes a common use type base boom and exclusive NEXT attachment joint for the Ultra long front, boom insert and the Separate boom.

KOBELCO's demolition machines with the exclusive NEXT joint systems are made so you can set up or change work fronts quick and easy to get the job done. With the ability to change tools on site and work at multiple heights with a single machine, the productivity is maximized with the needs of the job.

Due to the unique structure of this attachment, transport can be completed safely and with just a few steps. Add that to the excellent fuel savings and machine durability, KOBELCO helps provide the owner reduced operational costs, less downtime and greater return on investment.

KOBELCO's SK350DLC, SK400DLC, SK550DLC demolition machines are the next generation of high performance and cutting edge technology. They are ready to go to work for you.

Focus on operation rate resulting in a machine with common use type base boom

Previous demolition machines had a structure that basically did not allow machine front to be exchanged, meaning one complete machine was required for each specification. Having machines each dedicated to its specialty was useful onsite, but this meant that the operation rate was low and users were required to own multiple machines. KOBELCO's solution was to develop a machine structure that enabled one machine to be adapted to multiple specifications. Our solution took form in the shape of a machine with common use type base boom.

The NEXT system, created with focus on the site

A machine with common use type base boom can be easily transported by separating the main body and its attachments, requiring less time for set-up after arriving onsite. KOBELCO studied in detail how the assembly work could be completed safely in a short time. We threw out the previous fixed concepts about attachments and developed an innovative attachment that incorporated our various ideas, resulting in the NEXT system. This also allows for faster changes between the high reach and separate boom fronts.

3 base machine sizes
total of 8 different configurations

https://truckmanualshub.com/

Work setups done quickly and safely!
The new-generation NEXT demolition attachment

NEXT attachment

The new-generation NEXT demolition attachment for the demolition machine with common use type base boom was designed by KOBELCO without being limited by existing concepts. Each boom attachment has a block structure that simplifies assembly/disassembly and transport, and the attachments employ our original NEXT joint system. The steps for attachment assembly/disassembly from pressure release to pin fixing can be completed safely in a short time.

NEXT joint system

KOBELCO's original joint system was developed by testing the assembly/disassembly process extensively.
The boom attachment can be connected just by hooking the upper (backside) pin and fixing with the separate opposing pins on the lower side (bottom side).

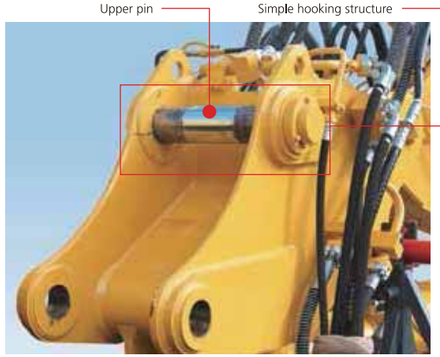

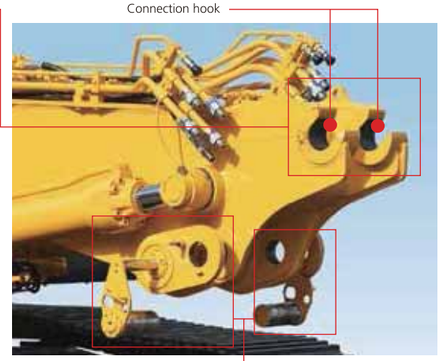

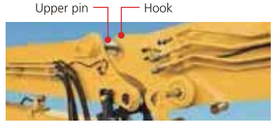

Upper side (back side): Pins just need to be hooked. There is no need to insert/remove the pins.

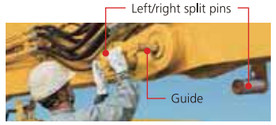

Lower side (bottom side): Guided left/right separate opposing pins make it easy to position the pins.

Side-mounted hydraulic piping

All attachment joints have the hydraulic piping mounted on the side, adopting hydraulic quick coupler system for connecting sections.

Piping connection: Hydraulic quick coupler system on the side of the boom.

Attachments and base machine designed for easy truck transport.

Attachment height during transport [NEXT ultra long attachment specification]

The 3-piece NEXT ultra long attachment is designed with the jib cylinder and arm cylinder crossed over the short inter arm, and the back of the arm is flat. The height while in the stored state has been lessened to approx. 7'3"(2,200mm) to lower the entire height during transport.

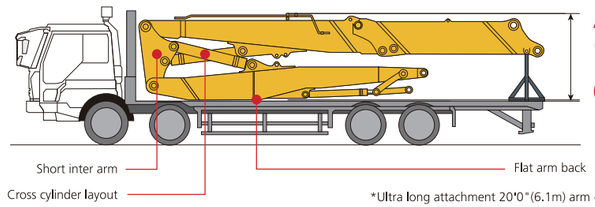

*Ultra long attachment 20'0"(6.1m) arm + 11'6"(3.5m) boom insert

Hydraulic crawler extension/retraction mechanism
[on SK400DLC and SK550DLC]

Crawlers can be retracted to reduce crawler width to below 9'9"(2,980mm) for ease of transport. The hydraulic system makes light work of extending or retracting with crawler shoes remaining on ground.

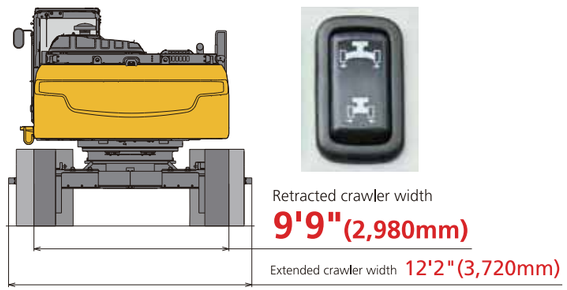

Two-part counterweight
[on SK400DLC and SK550DLC]

The counterweight can be separated into two for transport. One part forms a case into which the other part is housed. It looks neat and uncluttered, and assembly/disassembly is faster than with an integrated counterweight, also gives more versatility for transportation.

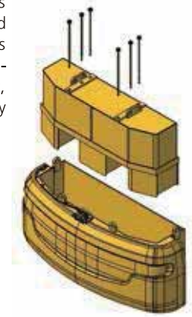

https://truckmanualshub.com/

Boom attachments can be changed easily, enabling a high machine operation rate

Ultra long attachment specification

The ultra long attachment enables demolition work at high places to be performed from the ground. The maximum work height is at the top level for this class, and this machine can be used for the demolition of common buildings up to nine stories high. The length can be shortened by removing the boom insert if maximum height is not required.

Maximum work height

	20'0"(6.1m) arm	28'6"(8.7m) arm
SK550DLC	Approx. 82'0"(25.0m)	Approx. 90'3"(27.5m)
SK400DLC	Approx. 69'3"(21.1m)	Approx. 81'0"(24.7m)
SK350DLC	Approx. 68'11"(21.0m)	—

Note: The measurement is for the arm bucket pin position.

Separate boom specification

The separate boom specification has a wide working range, making work at lower elevations and below ground level easy. The impressive maximum work depth exceeds 20', and a large diameter jib cylinder is attached to the boom bottom side to ensure substantial lifting power. This specification is suitable for demolition of the lower floors, underground floors, and foundations of buildings.

Working range

	Maximum work depth	Maximum work height
SK550DLC	20'6"(6.26m)	47'12"(14.62m)
SK400DLC	20'4"(6.21m)	44'11"(13.68m)
SK350DLC	20'9"(6.32m)	44'6"(13.57m)

Note: The measurement is for the arm bucket pin position.

Large front attachment

A 2.6 or 3 ton class large tool can be attached to the ultra long attachment specification. Powerful crushing can be performed at high floor levels for more efficient work progress. The separate boom specification can handle 4 to 5.3 ton class tools.

Tool limit weight

	Ultra long attachment specification		Separate boom specification
	20'0"(6.1m) arm	28'6"(8.7m) arm	
SK550DLC	6,610lbs(3,000kg)	5,700lbs(2,600kg)	11,680lbs(5,300kg)
SK400DLC	6,610lbs(3,000kg)	5,700lbs(2,600kg)	8,820lbs(4,000kg)
SK350DLC	5,700lbs(2,600kg)	—	8,820lbs(4,000kg)

Kobelco nibblers Option

With ultra long attachment specification, large crusher with mouth width exceeding 3'3"(1m) can be accommodated. Separate boom specification have a large nibbler already installed, for powerful crushing and efficient performance.

KR1100TPR-2
Mouth width **3'7"(1,100mm)**
Weight 5,690lbs(2,580kg) Crushing force (center) 341,710lbf(1,520kN)

KR1350TPR-40
Mouth width **4'5"(1,350mm)**
Weight 8,270lbs(3,750kg) Crushing force (center) 397,910lbf(1,770kN)

KR1500TPR-50
Mouth width **5'0"(1,530mm)**
Weight 11,460lbs(5,200kg) Crushing force (center) 467,600lbf(2,080kN)

KR1100TPR-2

KR1350TPR-40

SK400DLC
Ultra long attachment specification
20'(6.1m) arm + 11'6"(3.5m) boom insert

Fuel costs can be reduced with outstanding low fuel consumption and mode selection

New environmental engine

A new electronically controlled engine with high power and low fuel consumption is installed. Particulate matter and NOx emissions are suppressed through the engine's high combustion efficiency, exhaust gas after-treatment equipment, and urea SCR system. The engine also conforms to EPA Tier IV Final regulations.

AIS (Auto Idle Stop)

This idling stop function eliminates wasteful fuel consumption while waiting between operations. The engine stops automatically when the operation lever continues to remain in the locked state. Shut down time can be adjusted from 1 min to 5 min.

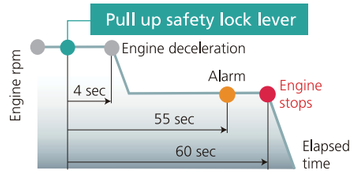

Fuel consumption mode

3 different work modes are available to prioritize fuel consumption and working power. Modes can be switched while using any front attachment including the nibbler, breaker, or bucket.

H mode
When prioritizing work volume

S mode
When prioritizing the balance between work volume and fuel consumption

ECO mode
When extensively prioritizing fuel consumption

Bucket / nibbler / breaker mode switch

New cluster gauge

The new multi-function color display is easy to use and in addition to gauges and information such as fuel consumption, maintenance, working radius/boom angle, and rear view camera images, the selected attachment mode and mounted front attachment are also displayed.

Fuel consumption

Attachment mode selection screen

Front attachment selection screen

https://truckmanualshub.com/

Enhanced safety functions to assist the operator in production and performance

New cab interference prevention system

The cab interference prevention system is standard on the SK350DLC, SK400DLC, SK550DLC. This feature sounds an alarm and prevents the machine from allowing the working tool to come into contact with the cab during operation. Current tool position can be detected with high accuracy so tool can be safely moved at close range without contacting the cab, resulting in safe working range. Operator is able to program multiple tools into the systems.

System configuration

The system calculates the various boom, attachment and idler link angles to create a proximity to the cab in order to prevent cab interference.

System operation

As the working tool approaches the cab, alarm is sounded before any contact can occur, and the machine automatically prevents tool from making contact with the cab.

Tilt cab

Cab is able to tilt up to 30 degrees and is a standard feature. The operator can maintain a comfortable posture during high elevation demolition work, suffering less fatigue over long working periods.

- Crosspiece on right side cab window for operator safety.
- Lower cab mirror and light to ensure full visibility for work around the machine base.
- Cab tilt lock for greater safety during tilt mechanism maintenance.
- Alarm to prevent accidents when cab tilting is operated.
- Cab lowering device for emergencies.

Stability warning system

The working radius and stability are calculated from the position of the attachment, and the operator is warned with a alarm (continuous sound) where the machine's stability could be compromised.

Swing angle sensor

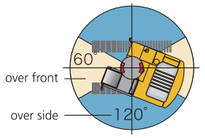

The working range is largest when working in-line with the track frame or over front of machine. For maximum stability and safety, Kobelco recommends working in-line with the track frame whenever possible.

Demolition structure cab

The adjoining edge of the top and front windows are free of view-obstructing pillars, and radial type grid guards are installed on front and upper sides. This gives the operator an unobstructed and continuous view from ground level to the maximum working height.

- ISO 10262 level II FOPS front and top guards.
- The cab guards can be opened and closed without tools, and the glass can be cleaned easily.
- Vertical open/close roller shades that can be stopped at any position.
- Laminated front window.

SK550D LC
Separate boom specification

Multiple standard features and accessories for ensuring safety

Rear view camera

The rear view camera is displayed on the multi-display.

Right side camera + monitor

Rear and side camera views can be displayed on the separate monitor.

Boom, arm and jib holding valves

Standard - to prevent boom or arm from falling if hose is damaged.

Cab with two LED lights

Cab mounted lights are standard.

Travel alarm

The alarm cautions workers in the area that the machine is traveling.

Swing flasher & Rear work light

The swing warning lamp helps prevent collisions and accidents while the upper body is turning.

Specialized boom/front stands*

For greater safety and efficiency during assembly, disassembly and transport.

Falling object deflector

The guard deflects falling debris away from the machine. This is standard for the ultra long attachment.

* The accessory settings may differ according to the class or specification. Refer to the list of key accessories on the back page for details.

https://truckmanualshub.com/

Highly durable structure to show enduring excellent performance in hard operations

Dedicated boom and arm for the ultra long attachment

Factory engineered heavy duty boom and arm. [Ultra long attachment]

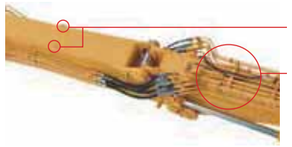

●Lifting eyes are provided.

●Hoses are routed for easy maintenance.

Various reinforcements and protective structures are incorporated in the arm section to prevent damage from contact or flying debris.

●Guided reinforced bucket cylinder guard with box-type structure

●Electric wiring with optimized routing and full cover for preventing damage

●Hoses routed to protect from damages

●Guarded work LED lights

Hydraulic oil filter restiction indicator

Clogging is detected by the pressure difference at the filter entrance and exit, and warnings are displayed on the color multi-display. Hydraulic equipment trouble can be prevented by taking action before contaminants enter the hydraulic oil tank.

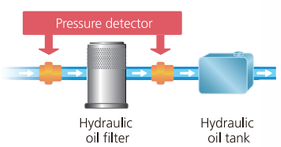

LED lights

Bright, long-life LED lights fitted to left and right of arm for ultra long attachment specification, and to left and right of boom for separate boom specification.

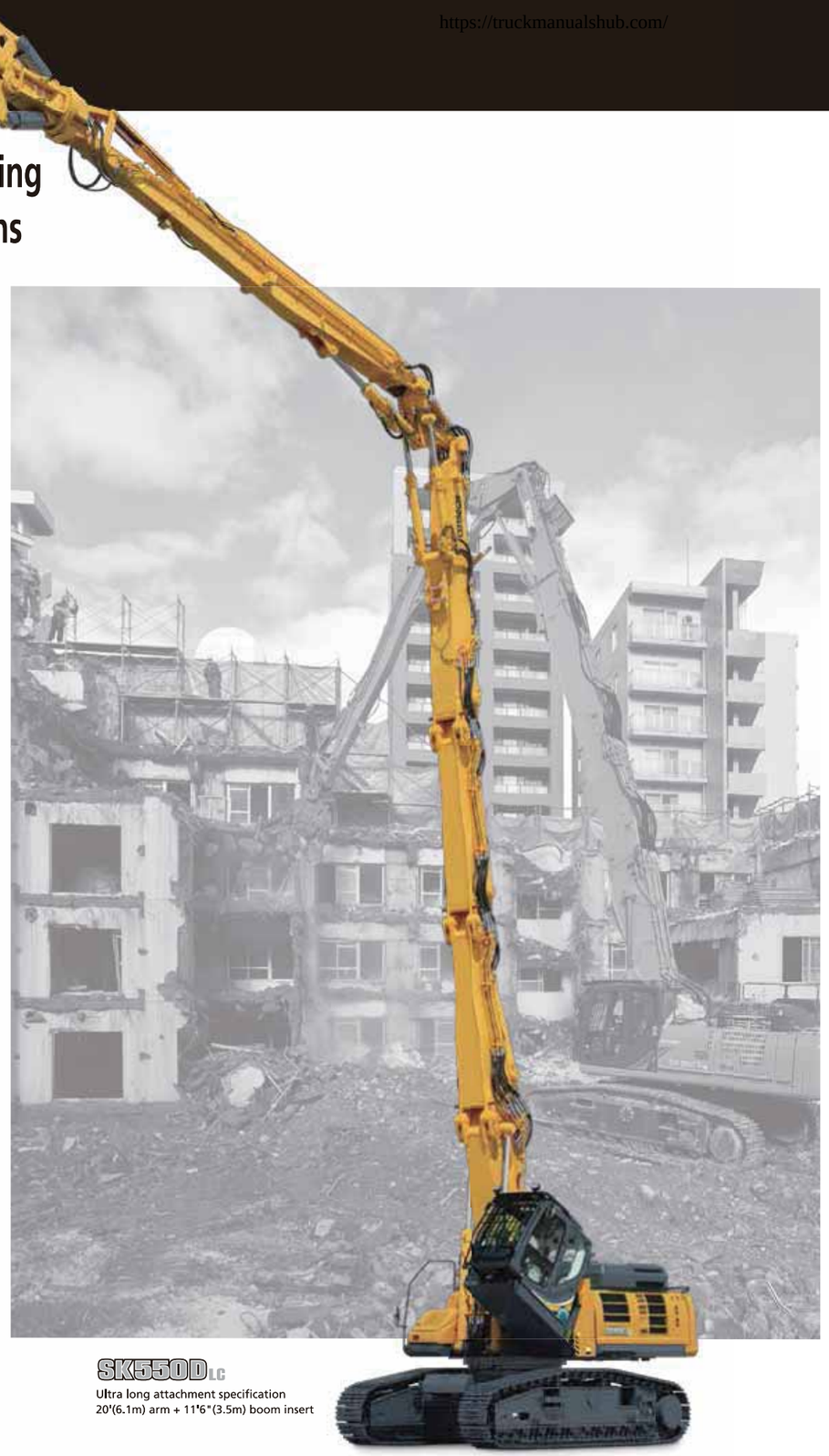

SK550DLC

Ultra long attachment specification
20'(6.1m) arm + 11'6"(3.5m) boom insert

Various functions and accessories for the longevity of the machine

Upper frame belly guards

The 0.24"(6mm) thick reinforced cover protects the inner devices & engine unit.

Swivel guard

The lower car body structure is fitted underneath with a 0.35"(9mm) thick reinforced cover.

Dust suppression system (with drainage circuit)

A drainage circuit is installed to drain water from the lines and prevent rust or freezing.

New hydraulic oil filter

Glass filtration material with outstanding filtering ability and durability is used.

Air cleaner (double element)

The double filter system provides clean and filtered air for the engine.

Auto lubrication system

The upper body is automatically greased at specific times to reduce operator maintenance before starting work.

Additional tool box

A large storage box for storing tools is provided.

Reinforced guard for travel motor

Thick steel plate used to ensure strength and protect drive motors.

Maintenance space

Large open space on top of machine to easily service and inspect engine .

Battery shut-off device

Single switch to prevent battery discharge over long inactive periods.

Full track guides*

Crawler de-tracking is prevented even on roughest ground littered with demolition rubble.

Crawler extension/retraction mechanism guard

Hydraulic cylinders are protected from debris. [on SK400DLC and SK550DLC]

* The accessory settings may differ according to the class or specification. Refer to the list of key accessories on the back page for details.

https://truckmanualshub.com/

Engine

	SK350DLC	SK400DLC	SK550DLC
Model	HINO JO8EVV-KSDK		HINO P11C-VN
Type	Water-cooled, 4 cycle, 6 cylinder direct injection type diesel engine with intercooler turbo-charger (complies with EU (NRMM) Stage IV, EPA Tier IV Final)		
No. of cylinders	6		
Bore and stroke	4.41" {112 mm} x 5.12" {130 mm}		4.80" {122 mm} x 5.91" {150 mm}
Displacement	468.9 cu.in {7.684 L}		642 cu.in {10.52 L}
Rated power output	270 hp / 2,100 rpm {201 kW / 2,100 min^{-1}} (SAE NET) 286 hp / 2,100 rpm {213 kW / 2,100 min^{-1}} (Without fan)		363 hp / 1,850 rpm {271 kW / 1,850 min^{-1}} (Without fan)
Max torque	729 lb-ft / 1,600 rpm {988 N·m / 1,600min^{-1}} (SAE NET) 750 lb-ft / 1,600 rpm {1,017 N·m / 1,600min^{-1}} (Without fan)		1,084 lb-ft / 1,400 rpm {1,470 N·m / 1,400 min^{-1}} (Without fan)

Hydraulic System

	SK350DLC	SK400DLC	SK550DLC
Pump			
Type	Parallel variable displacement piston pumps + one gear pump		
Max. discharge flow	Main pumps 2 x 77.7 U.S.gpm {294 L/min} Pump for pilot circuit 1 x 5.3 U.S.gpm {20 L/min}		Main pumps 2 x 97.7 U.S.gpm {370 L/min} Pump for pilot circuit 1 x 7.9 U.S.gpm {30 L/min}
Relief valve setting			
Excavating circuits (main)	4,550 psi {31.4 MPa}		
Power boost*	4,970 psi {34.3 MPa}		
Travel circuit	4,970 psi {34.3 MPa}		
Swing circuit	4,210 psi {29.0 MPa}		3,770 psi {26.0 MPa}
Pilot control circuit	725 psi {5.0 MPa}		
Nibbler(Crusher) circuit	Open&Close 4,550 psi {31.4 MPa} (Power Boost 4,970 psi {34.3 MPa}) Rotation 2,988 psi {20.6 MPa}		
Main control valve	8-spool		

*Only Separate boom specification

Swing System

	SK350DLC	SK400DLC	SK550DLC
Swing motor	One fixed displacement piston pump		Two fixed displacement piston pumps
Brake	Hydraulic		
Parking brake	Wet multiple plate		
Swing speed	Separate attachment 10.0 rpm {10.0 min^{-1}} 3-piece ultra long attachment 5.5 rpm {5.5 min^{-1}}		Separate attachment 7.6 rpm {7.6 min^{-1}} 3-piece ultra long attachment 4.0 rpm {4.0 min^{-1}}
Swing torque	88,200 lb-ft {119.6 kN·m}		136,100 lb-ft {184.6 kN·m}
Tail swing radius	11'10" ft-in {3,600 mm}		13' ft-in {3,970 mm}

Travel System

	SK350DLC	SK400DLC	SK550DLC
Travel motors	Variable displacement piston pump		
Travel brakes	Hydraulic		
Parking brakes	Wet multiple plate		
Travel shoes	48 each side		50 each side
Travel speed (high/low)	3.5/2.1 mph {5.6/3.3 km/h}		3.4/2.1 mph {5.4/3.4 km/h}
Drawbar pulling force	69,500 lbs {309kN} (SAE J 1309)	69,200 lbs {308 kN} (SAE J 1309)	91,700 lbs {408 kN} (SAE J 1309)
Gradeability	70 % (35 deg)		

Cab & Control

	SK350DLC	SK400DLC	SK550DLC
Cab			
	All-weather, sound-suppressed steel cab mounted on the high suspension mounts		
Control			
	Two hand levers and two foot pedals for travel		
	Two hand levers for excavating and swing		
	Electric rotary-type engine throttle		
	Tilting Cab (30°)		

Boom, Arm & Bucket

	SK350DLC	SK400DLC	SK550DLC
3-piece ultra long attachment			
Boom cylinders	2-6.7" {170 mm} x 4'11" {1,505 mm}		2-7'1" {180 mm} x 5'2" {1,580 mm}
Arm cylinder	1-6.7" {170 mm} x 4' {1,210 mm}		
Bucket cylinder	1-4.9" {125 mm} x 3'11" (1,200 mm}		
Jib cylinders	2-5.5" {140 mm} x 4' {1,210 mm}		
Max. tool weight	5,700 lbs {2,600 kg} (6.1m arm)	6,610 lbs {3,000 kg} (6.1m arm)	5,700 lbs {2,600 kg} (8.7m arm)
Separate attachment			
Boom cylinders	2-6.7" {170 mm} x 4'11" {1,505 mm}		2-7.1" {180 mm} x 5'2" {1,580 mm}
Arm cylinder	1-6.7" {170 mm} x 5'10" {1,788 mm}		1-7.5" {190 mm} x 6'6" {1,970 mm}
Bucket cylinder	1-5.9" {150 mm} x 3'11" {1,193 mm}		1-6.3" {160 mm} x 4'8" {1,410 mm}
Jib cylinders	1-9.4" {240 mm} x 4'4" {1,317 mm}		1-10.6" {270 mm} x 4'8" {1,418 mm}
Max. tool weight	8,820 lbs {4,000 kg}		11,680 lbs {5,300 kg}

Refilling Capacities & Lubrications

	SK350DLC	SK400DLC	SK550DLC
Fuel tank	132.9 U.S.gal {503 L}		180.4 U.S.gal {683 L}
Cooling system	9.2 U.S.gal {35 L}		12.8 U.S.gal {48.5 L}
Engine oil	7.5 U.S.gal {28.5 L}		11.2 U.S.gal {42.5 L}
Travel reduction gear	2x2.1 U.S.gal {2x8.0 L}		2x4.0 U.S.gal {2x15 L}
Swing reduction gear	2.0 U.S.gal {7.4 L}		
Hydraulic oil tank	64.7 U.S.gal {245 L} tank oil level		98.0 U.S.gal {371} L tank oil level
	108.3 U.S.gal {410 L} hydraulic system		193.4 U.S.gal {732} L hydraulic system
DEF/AdBlue tank	21.9 U.S.gal {83 L}		

Operating Weight & Ground Pressure

	SK350DLC		SK400DLC			SK550DLC		
Attachment Type	3-piece ultra long attachment/ equipment	Separate attachment	3-piece ultra long attachment/ equipment		Separate attachment	3-piece ultra long attachment/ equipment		Separate attachment
	20'0" {6.1m} arm		20'0" {6.1m} arm	28'6" {8.7m} arm		20'0" {6.1m} arm	28'6" {8.7m} arm	
Operating Weight	95,000 lbs {43,100 kg}	93,300 lbs {42,300 kg}	101,200 lbs {45,900 kg}	103,200 lbs {46,800 kg}	99,400 lbs {45,100 kg}	131,400 lbs {59,600 kg}	132,500 lbs {60,100 kg}	130,100 lbs {59,000 kg}
Ground Pressure	8.8 psi {60.5 kPa}	8.6 psi {59.3 kPa}	12.5 psi {85.9 kPa}	12.7 psi {87.5 kPa}	12.2 psi {84.3 kPa}	14.8 psi {102.1 kPa}	14.9 psi {103.0 kPa}	14.7 psi {101.1 kPa}

* Measured without max tool weight

https://truckmanualshub.com/

Dimensions

Dimensions (main body + base boom)

(Unit: ft-in {mm})

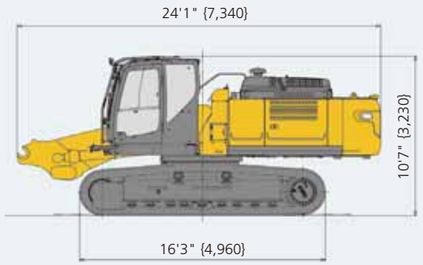

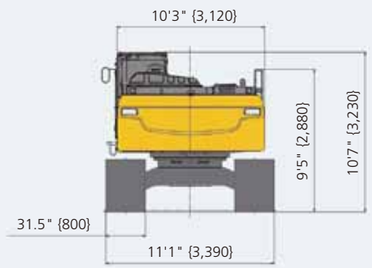

Assembled machine dimensions

(Unit: ft-in {mm})

●Ultra long attachment specification
with 11'6"(3.5m) boom insert

●Ultra long attachment specification
without boom insert

●Separate boom specification

Disassembled dimensions and weight

(Unit: ft-in {mm}, lbs {kg})

Main body + base boom

Weight: 78,700 lbs {35,700 kg}

Main body + base boom (without counterweight)

Weight: 57,800 lbs {26,200 kg}

Main body + base boom + boom insert

Weight: 82,200 lbs {37,300 kg}

Main body + base boom + boom insert
(without counterweight)

Weight: 61,300 lbs {27,800 kg}

Counterweight

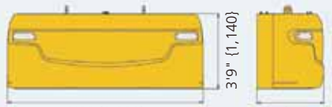

Weight: 20,900 lbs {9,460 kg}

Ultra long attachment
20'(6.1m) arm + 11'6"(3.5m) boom insert
(including enclosed stand)

Overall width: 5'10"ft-in {1,770 mm} Weight: 16,510 lbs {7,490 kg}

Ultra long attachment
20'(6.1m) arm (including enclosed stand)

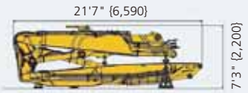

Overall width: 5'10"ft-in {1,770 mm} Weight: 12,900 lbs {5,850 kg}

Ultra long attachment
11'6"(3.5m) boom insert (including optional stand)

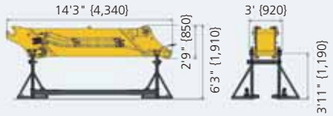

Overall width: 5'10"ft-in {1,770 mm} Weight: 4,210 lbs {1,910 kg}

Separate boom
(including enclosed stand)

Overall width: 5'10"ft-in {1,770 mm} Weight: 14,620 lbs {6,630 kg}

Working range

The measurements do not include crawler shoe lugs. Working ranges with max tool weight installed.

(Unit: ft-in {mm})

●Ultra long attachment specification : 20'0"(6.1m) arm

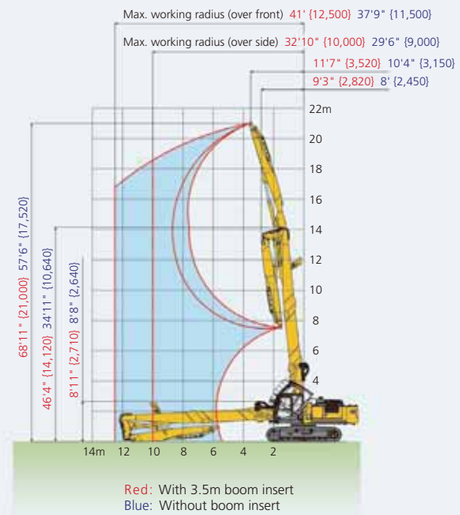

●Separate boom specification

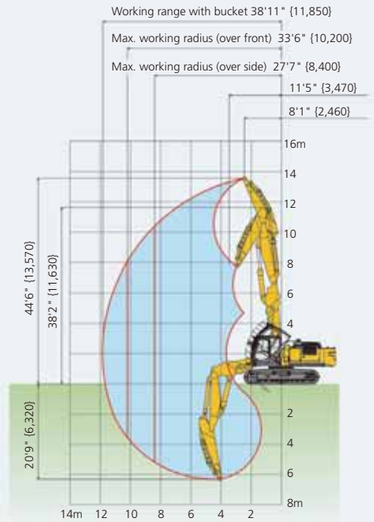

Lifting Capacities with Separate boom

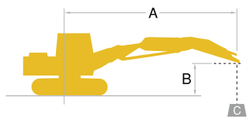

Rating over front

Rating over side or 90 degrees

A – Reach from swing centerline to arm tip
B – Arm bucket pin height above/below ground
C – Lifting capacities in pounds (kilograms)

SK350DLC

SK350DLC		Separate boom 10'10" {3.3m}, without tool, 31.5" {800mm} tracks shoes																
A / B		5'{1.5m}		10'{3.0m}		15'{4.6m}		20'{6.1m}		25'{7.6m}		30'{9.1m}		35'{10.7m}		At Max. Reach		
																		Radius
40' {12.2m}	lb {kg}					*23,600 {*10,700}	*23,600 {*10,700}									*17,460 {*7,920}	*17,460 {*7,920}	20'0" {6.10m}
35' {10.7m}	lb {kg}					*21,090 {*9,570}	*21,090 {*9,570}	*20,060 {*9,100}	*20,060 {*9,100}	*13,050 {*5,920}	*13,050 {*5,920}					*13,990 {*6,350}	13,860 {6,290}	26'7" {8.13m}
30' {9.1m}	lb {kg}					*19,020 {*8,630}	*19,020 {*8,630}	*21,090 {*9,570}	*21,090 {*9,570}	*11,500 {*5,220}	*11,500 {*5,220}	*11,990 {*5,440}	11,330 {5,140}			*12,380 {*5,620}	10,250 {4,650}	31'2" {9.50m}
25' {7.6m}	lb {kg}			*17,950 {*8,140}	*17,950 {*8,140}	*20,850 {*9,460}	*20,850 {*9,460}	*22,770 {*10,330}	*22,770 {*10,330}	*13,070 {*5,930}	*13,070 {*5,930}	*10,920 {*4,950}	*10,920 {*4,950}			*11,510 {*5,220}	8,320 {3,770}	34'4" {10.47m}
20' {6.1m}	lb {kg}					*35,100 {*15,920}	33,800 {15,330}	*25,290 {*11,470}	21,090 {9,570}	*19,360 {*8,780}	14,780 {6,700}	*11,010 {*4,990}	10,810 {4,900}	*11,030 {*5,000}	8,000 {3,630}	*11,040 {*5,010}	7,190 {3,260}	36'6" {11.15m}
15' {4.6m}	lb {kg}			*32,730 {*14,850}	*32,730 {*14,850}	*34,170 {*15,500}	30,700 {13,960}	*25,010 {*11,340}	18,620 {8,450}	20,520 {9,310}	13,520 {6,130}	*11,560 {*5,240}	10,140 {4,600}	*11,120 {*5,040}	7,730 {3,510}	10,310 {4,680}	6,510 {2,950}	38'0" {11.59m}
10' {3.0m}	lb {kg}					*24,690 {*11,200}	*24,690 {*11,200}	26,670 {12,100}	16,790 {7,620}	19,230 {8,720}	12,330 {5,590}	14,740 {6,690}	9,470 {4,300}	11,630 {5,280}	7,390 {3,350}	9,850 {4,470}	6,150 {2,790}	38'8" {11.81m}
5' {1.5m}	lb {kg}					*19,090 {*8,660}	*19,090 {*8,660}	25,300 {11,480}	15,560 {7,060}	18,310 {8,310}	11,480 {5,210}	14,170 {6,430}	8,930 {4,050}	11,330 {5,140}	7,100 {3,220}	9,750 {4,420}	6,060 {2,750}	38'9" {11.84m}
Ground Level	lb {kg}			*20,220 {*9,170}	*20,220 {*9,170}	*18,280 {*8,290}	*18,280 {*8,290}	*24,210 {*10,980}	15,070 {6,840}	17,850 {8,100}	11,060 {5,020}	13,840 {6,280}	8,620 {3,910}	11,180 {5,070}	6,950 {3,150}	9,980 {4,530}	6,230 {2,830}	38'3" {11.67m}
-5' {-1.5m}	lb {kg}			*20,540 {*9,320}	*20,540 {*9,320}	*18,300 {*8,300}	*18,300 {*8,300}	24,990 {11,340}	15,280 {6,930}	17,820 {8,080}	11,020 {5,000}	13,790 {6,260}	8,570 {3,890}	11,250 {5,100}	7,020 {3,180}	10,610 {4,810}	6,680 {3,030}	37'0" {11.28m}
-10' {-3.0m}	lb {kg}	*38,700 {*17,550}	*38,700 {*17,550}	*33,180 {*15,050}	*33,180 {*15,050}	*28,410 {*12,890}	25,120 {11,390}	*19,900 {*9,030}	15,740 {7,140}	*17,830 {*8,090}	11,310 {5,130}	*14,040 {*6,370}	8,810 {4,000}			*8,980 {*4,070}	7,610 {3,450}	34'9" {10.59m}
-15' {-4.6m}	lb {kg}			*46,940 {*21,290}	*46,940 {*21,290}	*28,980 {*13,150}	26,090 {11,830}	*20,570 {*9,330}	16,480 {7,480}	*15,830 {*7,180}	11,890 {5,390}	*13,180 {*5,980}	9,540 {4,330}			*10,900 {*4,940}	9,570 {4,340}	30'5" {9.26m}
-20' {-6.1m}	lb {kg}					*30,720 {*13,930}	28,180 {12,780}	*22,150 {*10,050}	18,520 {8,270}							*18,080 {*8,200}	17,990 {8,160}	21'0" {6.39m}

Notes:
1. Do not attempt to lift or hold any load that is greater than these lift capacities at their specified lift point radius and height. Weight of all accessories must be deducted from the above lift capacities.
2. Lift capacities are based on machine standing on level, firm, and uniform ground. User must make allowance for job conditions such as soft or uneven ground out of level conditions, side loads, sudden stopping of loads, hazardous conditions, experience of personnel, etc.
3. Arm top pin is defined as lift point.
4. The above lift capacities are in compliance with SAE J/ISO 10567. They do not exceed 87 % of hydraulic lift capacity or 75 % of tipping load. Lift capacities marked with an asterisk (*) are limited by hydraulic capacity rather than tipping load.
5. Operator should be fully acquainted with the Operator's and Maintenance Instructions before operating this machine and rules for safe operation of equipment should be adhered to at all times.
6. Lift capacities apply to only machines as originally manufactured and normally equipped by KOBELCO CONSTRUCTION MACHINERY CO., LTD.
7. This table cannot be applied for high reach demolition machines.
8. Use this machine in the following applications. In specification for ultra long attachment for demolition work . In specification for separate boom for demolition and loading. Never use the machine for any purpose other than the above applications.
9. Please carefully read the operation's manual.

https://truckmanualshub.com/

Dimensions

Dimensions (main body + base boom)

(Unit: ft-in {mm})

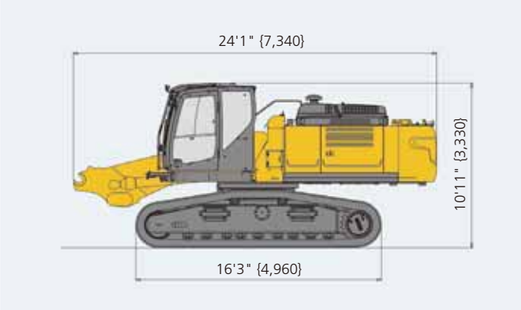

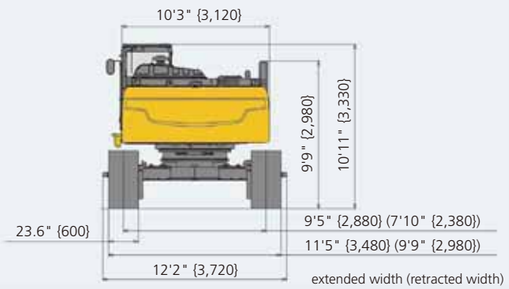

Assembled machine dimensions

(Unit: ft-in {mm})

●Ultra long attachment : 28'6"(8.7m) arm + 7'10"(2.4m) boom insert

●Ultra long attachment : 28'6"(8.7m) arm without boom insert

●Ultra long attachment : 20'(6.1m) arm + 11'6"(3.5m) boom insert

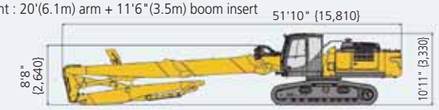

●Ultra long attachment : 20'(6.1m) arm without boom insert

●Separate boom specification

Disassembled dimensions and weight

(Unit: ft-in {mm}, lbs {kg})

Main body + base boom

Weight: 84,900 lbs {38,500 kg}

Main body + base boom (without counterweight)

Weight: 62,400 lbs {28,300 kg}

Main body + base boom + 11'6"(3.5m) boom insert

Weight: 88,400 lbs {40,100 kg}

Main body + base boom + 11'6"(3.5m) boom insert (without counterweight)

Weight: 66,100 lbs {30,000 kg}

Main body + base boom + 7'10"(2.4m) boom insert

Weight: 88,000 lbs {39,900 kg}

Main body + base boom + 7'10"(2.4m) boom insert (without counterweight)

Weight: 65,500 lbs {29,700 kg}

Counterweight Case

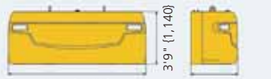

Weight: 7,100 lbs {3,220 kg}

Counterweight

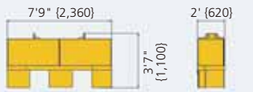

Weight: 15,120 lbs {6,860 kg}

Ultra long attachment : 28'6"(8.7m) arm + 7'10"(2.4m) boom insert (including enclosed stand)

Overall width: 5'10"ft-in {1,770 mm} Weight: 18,450 lbs {8,370 kg}

Ultra long attachment : 28'6"(8.7m) arm (including enclosed stand)

Overall width: 5'10"ft-in {1,770 mm} Weight: 15,410 lbs {6,990 kg}

Ultra long attachment : 7'10"(2.4m) boom insert (including optional stand)

Overall width: 5'10"ft-in {1,770 mm} Weight: 3,570 lbs {1,620 kg}

Ultra long attachment : 20'(6.1m) arm + 11'6"(3.5m) boom insert (including enclosed stand)

Overall width: 5'10"ft-in {1,770 mm} Weight: 16,510 lbs {7,490 kg}

Ultra long attachment : 20'(6.1m) arm (including enclosed stand)

Overall width: 5'10"ft-in {1,770 mm} Weight: 12,900 lbs {5,850 kg}

Ultra long attachment : 11'6"(3.5m) boom insert (including optional stand)

Overall width: 5'10"ft-in {1,770 mm} Weight: 4,210 lbs {1,910 kg}

Separate boom (including enclosed stand)

Overall width: 5'10"ft-in {1,770 mm} Weight: 14,620 lbs {6,630 kg}

Working range

The measurements do not include crawler shoe lugs. Working ranges with max tool weight installed.

(Unit: ft-in {mm})

●Ultra long attachment specification : 28'6"(8.7m) arm

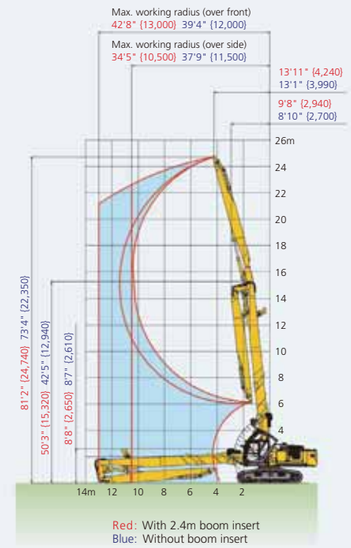

●Ultra long attachment specification : 20'0"(6.1m) arm

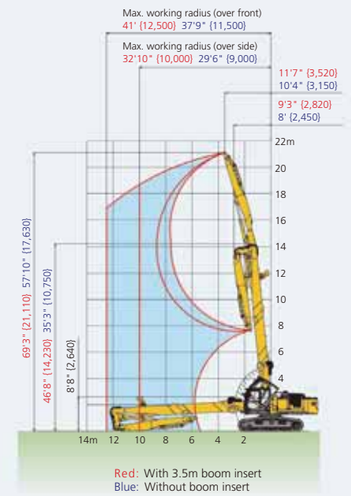

●Separate boom specification

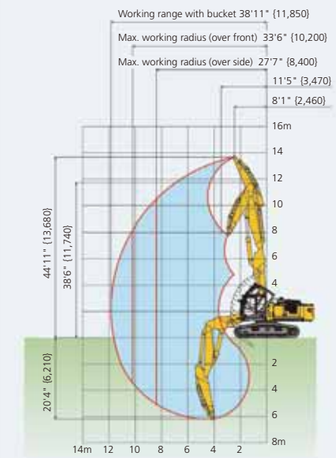

Lifting Capacities with Separate boom

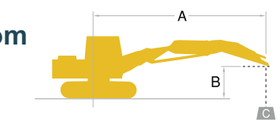

Rating over front

Rating over side or 90 degrees

A – Reach from swing centerline to arm tip
B – Arm bucket pin height above/below ground
C – Lifting capacities in pounds (kilograms)

SK400DLC

SK400DLC		Separate boom 10'8" {3.3m}, without tool 23.6" {600mm} tracks shoes																
A / B		5'{1.5m}		10'{3.0m}		15'{4.6m}		20'{6.1m}		25'{7.6m}		30'{9.1m}		35'{10.7m}		At Max. Reach		
																		Radius
40' {12.2m}	lb {kg}					*23,790 {*10,790}	*23,790 {*10,790}	*16,700 {*7,570}	*16,700 {*7,570}							*17,070 {*7,740}	*17,070 {*7,740}	20'7" {6.28m}
35' {10.7m}	lb {kg}					*20,860 {*9,460}	*20,860 {*9,460}	*20,490 {*9,290}	*20,490 {*9,290}	*12,990 {*5,890}	*12,990 {*5,890}					*13,830 {*6,270}	*13,830 {*6,270}	27'1" {8.25m}
30' {9.1m}	lb {kg}					*18,940 {*8,590}	*18,940 {*8,590}	*21,050 {*9,550}	*21,050 {*9,550}	*11,270 {*5,110}	*11,270 {*5,110}	*11,780 {*5,340}	*11,780 {*5,340}			*12,300 {*5,580}	*12,300 {*5,580}	31'5" {9.58m}
25' {7.6m}	lb {kg}					*21,460 {*9,730}	*21,460 {*9,730}	*23,130 {*10,490}	*23,130 {*10,490}	*13,720 {*6,220}	*13,720 {*6,220}	*10,980 {*4,980}	*10,980 {*4,980}			*11,470 {*5,200}	10,660 {4,840}	34'6" {10.53m}
20' {6.1m}	lb {kg}					*34,910 {*15,830}	*34,910 {*15,830}	*25,280 {*11,470}	*25,280 {*11,470}	*19,880 {*9,020}	18,460 {8,370}	*11,030 {*5,000}	*11,030 {*5,000}	*11,020 {*5,000}	10,390 {4,710}	*11,020 {*5,000}	9,380 {4,250}	36'9" {11.19m}
15' {4.6m}	lb {kg}			*30,180 {*13,690}	*30,180 {*13,690}	*34,040 {*15,440}	*34,040 {*15,440}	*25,300 {*11,480}	23,550 {10,680}	*22,100 {*10,020}	17,160 {7,780}	*11,730 {*5,320}	*11,730 {*5,320}	*11,240 {*5,100}	10,100 {4,580}	*10,850 {*4,920}	8,620 {3,910}	38'1" {11.61m}
10' {3.0m}	lb {kg}					*23,180 {*10,510}	*23,180 {*10,510}	*29,840 {*13,540}	21,760 {9,870}	24,090 {10,930}	15,960 {7,240}	*16,060 {*7,280}	12,330 {5,590}	*11,810 {*5,360}	9,750 {4,420}	*10,900 {*4,940}	8,240 {3,740}	38'9" {11.82m}
5' {1.5m}	lb {kg}					*19,060 {*8,650}	*19,060 {*8,650}	*27,030 {*12,260}	20,550 {9,320}	23,180 {10,510}	15,120 {6,860}	17,900 {8,120}	11,790 {5,350}	*12,880 {*5,840}	9,470 {4,300}	*11,170 {*5,070}	8,160 {3,700}	38'10" {11.84m}
Ground Level	lb {kg}			*20,400 {*9,250}	*20,400 {*9,250}	*18,570 {*8,420}	*18,570 {*8,420}	*24,660 {*11,190}	20,110 {9,120}	22,740 {10,310}	14,720 {6,680}	*17,050 {7,730}	11,500 {5,220}	*13,850 {*6,280}	9,330 {4,230}	*11,690 {*5,300}	8,390 {3,810}	38'3" {11.65m}
-5' {-1.5m}	lb {kg}			*21,250 {*9,640}	*21,250 {*9,640}	*18,480 {*8,380}	*18,480 {*8,380}	*24,930 {*11,310}	20,350 {9,230}	*22,340 {*10,130}	14,710 {6,670}	17,550 {7,960}	11,470 {5,200}	*14,130 {*6,410}	9,420 {4,270}	*11,120 {*5,040}	8,960 {4,060}	36'11" {11.28m}
-10' {-3.0m}	lb {kg}	*39,390 {*17,870}	*39,390 {*17,870}	*34,300 {*15,560}	*34,300 {*15,560}	*28,260 {*12,820}	*28,260 {*12,820}	*19,940 {*9,040}	*19,940 {*9,040}	*17,430 {*7,910}	15,020 {6,810}	*14,240 {*6,460}	11,740 {5,330}			*9,000 {*4,080}	*9,000 {*4,080}	34'4" {10.48m}
-15' {-4.6m}	lb {kg}			*47,080 {*21,360}	*47,080 {*21,360}	*29,060 {*13,180}	*29,060 {*13,180}	*20,600 {*9,340}	*20,060 {*9,340}	*15,880 {*7,200}	15,650 {7,100}					*11,070 {*5,020}	*11,070 {*5,020}	29'8" {9.05m}
-20' {-6.1m}	lb {kg}					*31,020 {*14,070}	*31,020 {*14,070}									*20,750 {*9,410}	*20,750 {*9,410}	18'4" {5.58m}

Notes:
1. Do not attempt to lift or hold any load that is greater than these lift capacities at their specified lift point radius and height. Weight of all accessories must be deducted from the above lift capacities.
2. Lift capacities are based on machine standing on level, firm, and uniform ground. User must make allowance for job conditions such as soft or uneven ground out of level conditions, side loads, sudden stopping of loads, hazardous conditions, experience of personnel, etc.
3. Arm top pin is defined as lift point.
4. The above lift capacities are in compliance with SAE J/ISO 10567. They do not exceed 87 % of hydraulic lift capacity or 75 % of tipping load. Lift capacities marked with an asterisk (*) are limited by hydraulic capacity rather than tipping load.
5. Operator should be fully acquainted with the Operator's and Maintenance Instructions before operating this machine and rules for safe operation of equipment should be adhered to at all times.
6. Lift capacities apply to only machines as originally manufactured and normally equipped by KOBELCO CONSTRUCTION MACHINERY CO., LTD.
7. This table cannot be applied for high reach demolition machines.
8. Use this machine in the following applications. In specification for ultra long attachment for demolition work . In specification for separate boom for demolition and loading. Never use the machine for any purpose other than the above applications.
9. Please carefully read the operation's manual.

https://truckmanualshub.com/

Dimensions

Dimensions (main body + base boom)

(Unit: ft-in {mm})

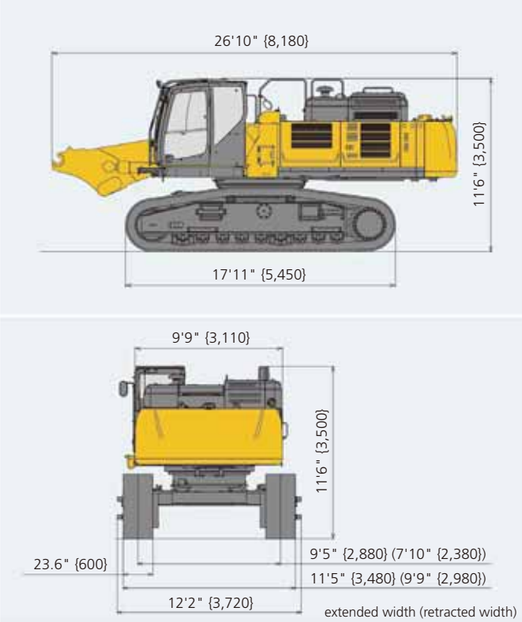

Assembled machine dimensions

(Unit: ft-in {mm})

●Ultra long attachment : 28'6"(8.7m) arm + 7'10"(2.4m) boom insert

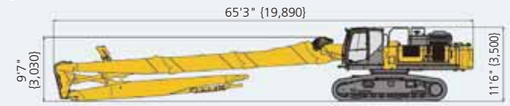

●Ultra long attachment : 28'6"(8.7m) arm without boom insert

●Ultra long attachment : 20'(6.1m) arm + 11'6"(3.5m) boom insert

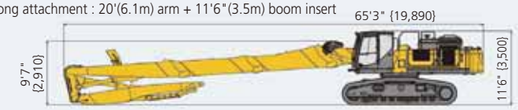

●Ultra long attachment : 20'(6.1m) arm without boom insert

●Separate boom specification

Disassembled dimensions and weight

(Unit: ft-in {mm}, lbs {kg})

Main body + base boom

Weight: 111,100 lbs {50,400 kg}

Main body + base boom (without counterweight)

Weight: 86,400 lbs {39,200 kg}

Counterweight Case

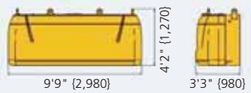

Weight: 10,600 lbs {4,810 kg}

Counterweight

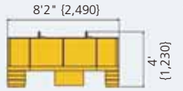

Weight: 13,800 lbs {6,260 kg}

Ultra long attachment : 28'6"(8.7m) arm + 11'6"(3.5m) boom insert (including enclosed stand)

Overall width: 5'10"ft-in {1,770 mm} Weight: 17,680 lbs {8,010 kg}

Ultra long attachment : 28'6"(8.7m) arm (including enclosed stand)

Overall width: 5'10"ft-in {1,770 mm} Weight: 14,070 lbs {6,380 kg}

Ultra long attachment : 20'(6.1m) arm + 11'6"(3.5m) boom insert (including enclosed stand)

Overall width: 5'10"ft-in {1,770 mm} Weight: 16,500 lbs {7,490 kg}

Ultra long attachment : 20'(6.1m) arm (including enclosed stand)

Overall width: 5'10"ft-in {1,770 mm} Weight: 12,900 lbs {5,850 kg}

Ultra long attachment : 11'6"(3.5m) boom insert (including optional stand)

Overall width: 5'10"ft-in {1,770 mm} Weight: 4,210 lbs {1,910 kg}

Ultra long attachment : 11'6"(3.5m) boom adapter (including optional stand)

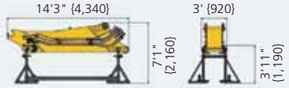

Overall width: 6'1"ft-in {1,850 mm} Weight: 4,480 lbs {2,030 kg}

Separate boom (including enclosed stand)

Overall width: 6'1"ft-in {1,850 mm} Weight: 9,070 lbs {8,650 kg}

Working range

The measurements do not include crawler shoe lugs. Working ranges with max tool weight installed.

(Unit: ft-in {mm})

●Ultra long attachment specification : 28'6"(8.7m) arm

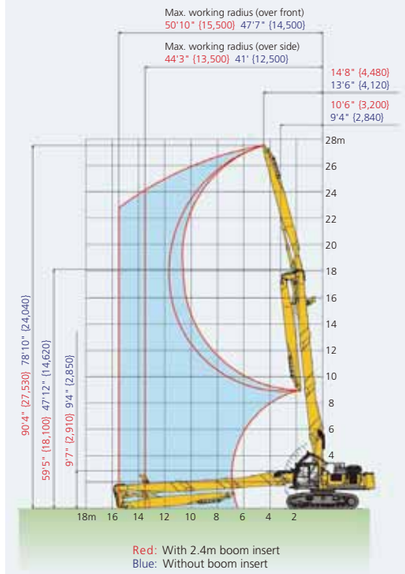

●Ultra long attachment specification : 20'0"(6.1m) arm

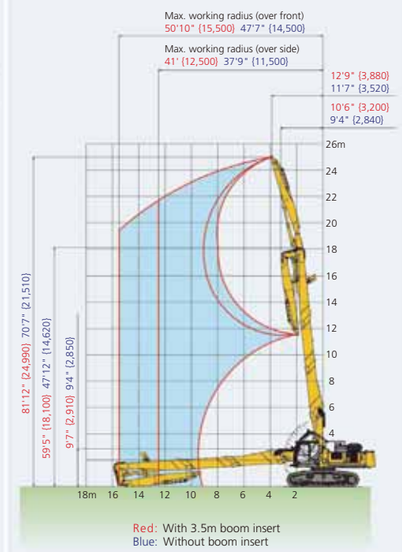

●Separate boom specification

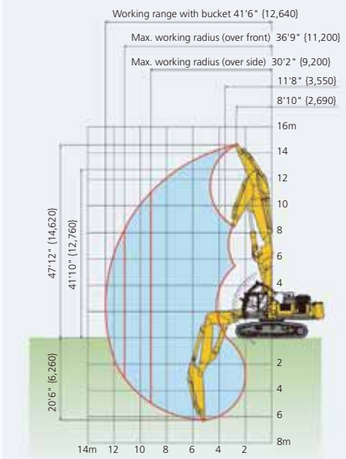

Lifting Capacities with Separate boom

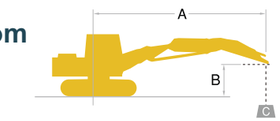

Rating over front

Rating over side or 90 degrees

A – Reach from swing centerline to arm tip
B – Arm bucket pin height above/below ground
C – Lifting capacities in pounds (kilograms)

SK550DLC

SK550DLC		Separate boom 11'4" {3.45m}, without tool 23.6" {600mm} tracks shoes																
A / B		10'{3.0m}		15'{4.6m}		20'{6.1m}		25'{7.6m}		30'{9.1m}		35'{10.7m}		40'{12.2m}		At Max. Reach		
																		Radius
45' {13.7m}	lb {kg}			*32,170 {*14,590}	*32,170 {*14,590}											*32,520 {*14,750}	*32,520 {*14,750}	18'1" {5.51m}
40' {12.2m}	lb {kg}					*24,980 {*11,330}	*24,980 {*11,330}	*24,450 {*11,090}	*24,450 {*11,090}							*25,110 {*11,390}	*25,110 {*11,390}	26'1" {7.95m}
35' {10.7m}	lb {kg}			*23,260 {*10,550}	*23,260 {*10,550}	*25,200 {*11,430}	*25,200 {*11,430}	*19,890 {*9,020}	*19,890 {*9,020}	*21,010 {*9,530}	20,940 {9,500}					*21,500 {*9,750}	19,030 {8,630}	31'4" {9.55m}
30' {9.1m}	lb {kg}			*21,470 {*9,740}	*21,470 {*9,740}	*24,740 {*11,220}	*24,740 {*11,220}	*18,410 {*8,350}	*18,410 {*8,350}	*18,670 {*8,470}	*18,670 {*8,470}	*19,440 {*8,820}	15,450 {7,010}			*19,440 {*8,820}	15,370 {6,970}	35'1" {10.69m}
25' {7.6m}	lb {kg}			*32,390 {*14,690}	*32,390 {*14,690}	*24,050 {*10,910}	*24,050 {*10,910}	*18,190 {*8,250}	*18,190 {*8,250}	*17,730 {*8,040}	*17,730 {*8,040}	*19,440 {*8,820}	15,500 {7,030}			*18,080 {*8,200}	13,210 {5,990}	37'9" {11.52m}
20' {6.1m}	lb {kg}			*32,560 {*14,770}	*32,560 {*14,770}	*23,410 {*10,620}	*23,410 {*10,620}	*19,160 {*8,690}	*19,160 {*8,690}	*18,010 {*8,170}	*18,010 {*8,170}	*17,920 {*8,130}	15,060 {6,830}			*17,020 {*7,720}	11,860 {5,380}	39'8" {12.10m}
15' {4.6m}	lb {kg}			*26,210 {*11,890}	*26,210 {*11,890}	*25,790 {*11,700}	*25,790 {*11,700}	*21,470 {*9,740}	*21,470 {*9,740}	*19,180 {*8,700}	18,340 {8,320}	*18,230 {*8,270}	14,460 {6,560}	*16,710 {*7,580}	11,530 {5,230}	*16,090 {*7,300}	11,050 {5,010}	40'11" {12.46m}
10' {3.0m}	lb {kg}			*17,640 {*8,000}	*17,640 {*8,000}	*24,290 {*11,020}	*24,290 {*11,020}	*24,100 {*10,930}	22,160 {10,050}	*20,700 {*9,390}	17,350 {7,870}	*18,920 {*8,580}	13,870 {6,290}	*16,340 {*7,410}	11,270 {5,110}	*15,230 {*6,910}	10,650 {4,830}	41'5" {12.63m}
5' {1.5m}	lb {kg}			*15,670 {*7,110}	*15,670 {*7,110}	*19,220 {*8,720}	*19,220 {*8,720}	*26,520 {*12,030}	21,140 {9,590}	*22,240 {*10,090}	16,600 {7,530}	*19,000 {*8,620}	13,430 {6,090}	*15,560 {*7,060}	11,070 {5,020}	*14,260 {*6,470}	10,560 {4,790}	41'4" {12.61m}
Ground Level	lb {kg}			*15,500 {*7,030}	*15,500 {*7,030}	*17,810 {*8,080}	*17,810 {*8,080}	*25,900 {*11,750}	20,720 {9,400}	*21,610 {*9,800}	16,200 {7,350}	*17,880 {*8,110}	13,160 {5,970}	*13,980 {*6,340}	11,020 {5,000}	*13,120 {*5,950}	10,820 {4,910}	40'8" {12.40m}
-5' {-1.5m}	lb {kg}	*23,700 {*10,750}	*23,700 {*10,750}	*17,060 {*7,740}	*17,060 {*7,740}	*25,070 {*11,370}	*25,070 {*11,370}	*22,990 {*10,430}	20,750 {9,410}	*19,470 {*8,830}	16,140 {7,320}	*15,870 {*7,200}	13,160 {5,970}			*11,600 {*5,260}	11,510 {5,220}	39'4" {11.99m}
-10' {-3.0m}	lb {kg}	*38,980 {*17,660}	*38,980 {*17,660}	*34,630 {*15,710}	*34,630 {*15,710}	*24,070 {*10,920}	*24,070 {*10,920}	*18,920 {*8,580}	*18,920 {*8,580}	*16,120 {*7,310}	*16,120 {*7,310}	*12,390 {*5,620}	*12,390 {*5,620}			*11,600 {*5,260}	11,510 {5,220}	36'7" {11.16m}
-15' {-4.6m}	lb {kg}	*58,180 {*26,390}	*58,180 {*26,390}	*35,490 {*16,100}	*35,490 {*16,100}	*24,870 {*11,280}	*24,870 {*11,280}	*18,920 {*8,580}	*18,920 {*8,580}	*15,370 {*6,970}	*15,370 {*6,970}					*14,640 {*6,640}	*14,640 {*6,640}	31'9" {9.67m}
-20' {-6.1m}	lb {kg}			*37,650 {*17,080}	*37,650 {*17,080}	*26,740 {*12,130}	*26,740 {*12,130}									*25,860 {*11,730}	*25,860 {*11,730}	20'8" {6.29m}

Notes:
1. Do not attempt to lift or hold any load that is greater than these lift capacities at their specified lift point radius and height. Weight of all accessories must be deducted from the above lift capacities.
2. Lift capacities are based on machine standing on level, firm, and uniform ground. User must make allowance for job conditions such as soft or uneven ground out of level conditions, side loads, sudden stopping of loads, hazardous conditions, experience of personnel, etc.
3. Arm top pin is defined as lift point.
4. The above lift capacities are in compliance with SAE J/ISO 10567. They do not exceed 87 % of hydraulic lift capacity or 75 % of tipping load. Lift capacities marked with an asterisk (*) are limited by hydraulic capacity rather than tipping load.
5. Operator should be fully acquainted with the Operator's and Maintenance Instructions before operating this machine and rules for safe operation of equipment should be adhered to at all times.
6. Lift capacities apply to only machines as originally manufactured and normally equipped by KOBELCO CONSTRUCTION MACHINERY CO., LTD.
7. This table cannot be applied for high reach demolition machines.
8. Use this machine in the following applications. In specification for ultra long attachment for demolition work . In specification for separate boom for demolition and loading. Never use the machine for any purpose other than the above applications.
9. Please carefully read the operation's manual.